0.0016(01) MAIN SECTIONS

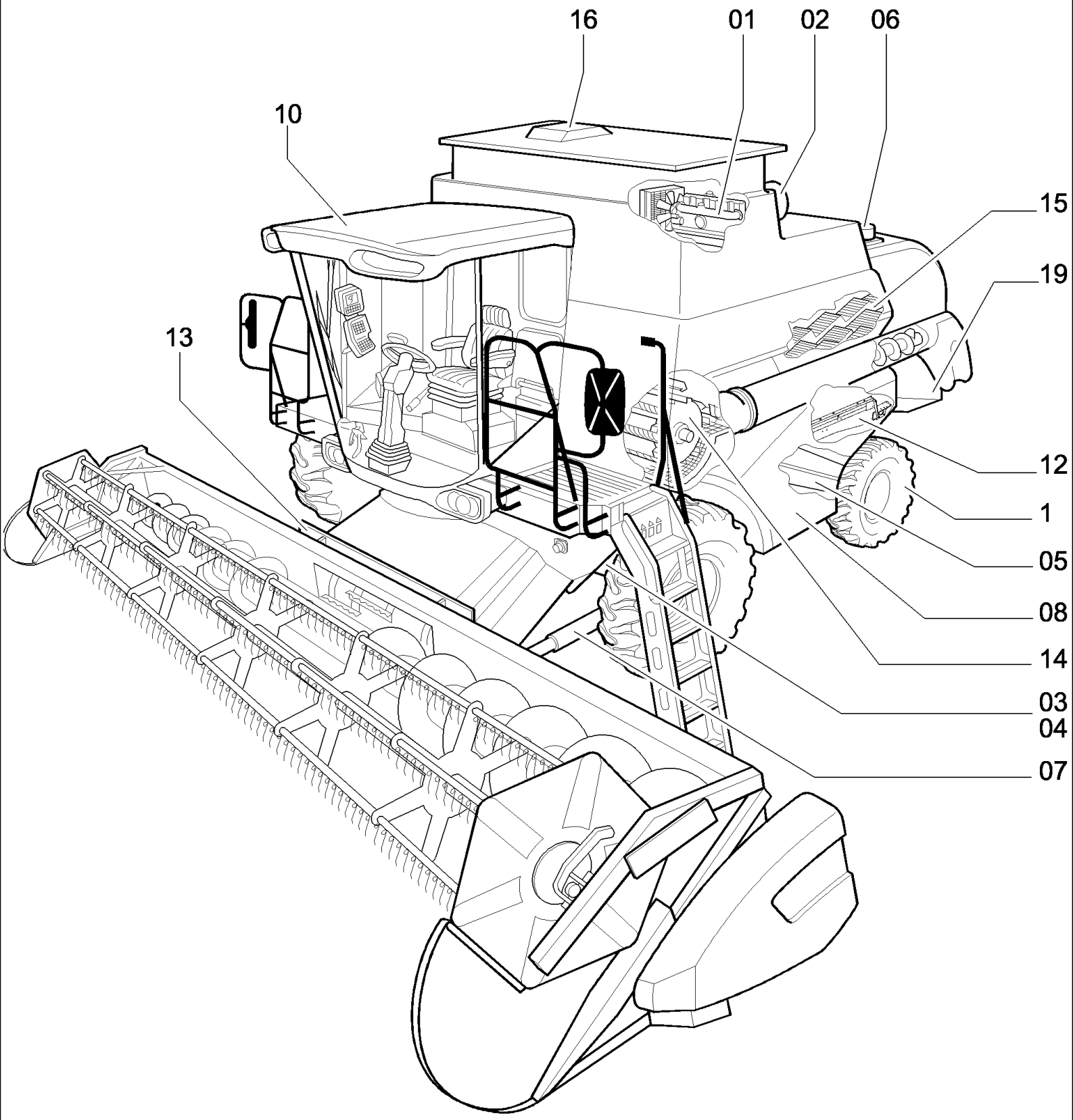

0.0016(01) MAIN SECTIONS

ссылка	Номер детали	Кол-во	Описание

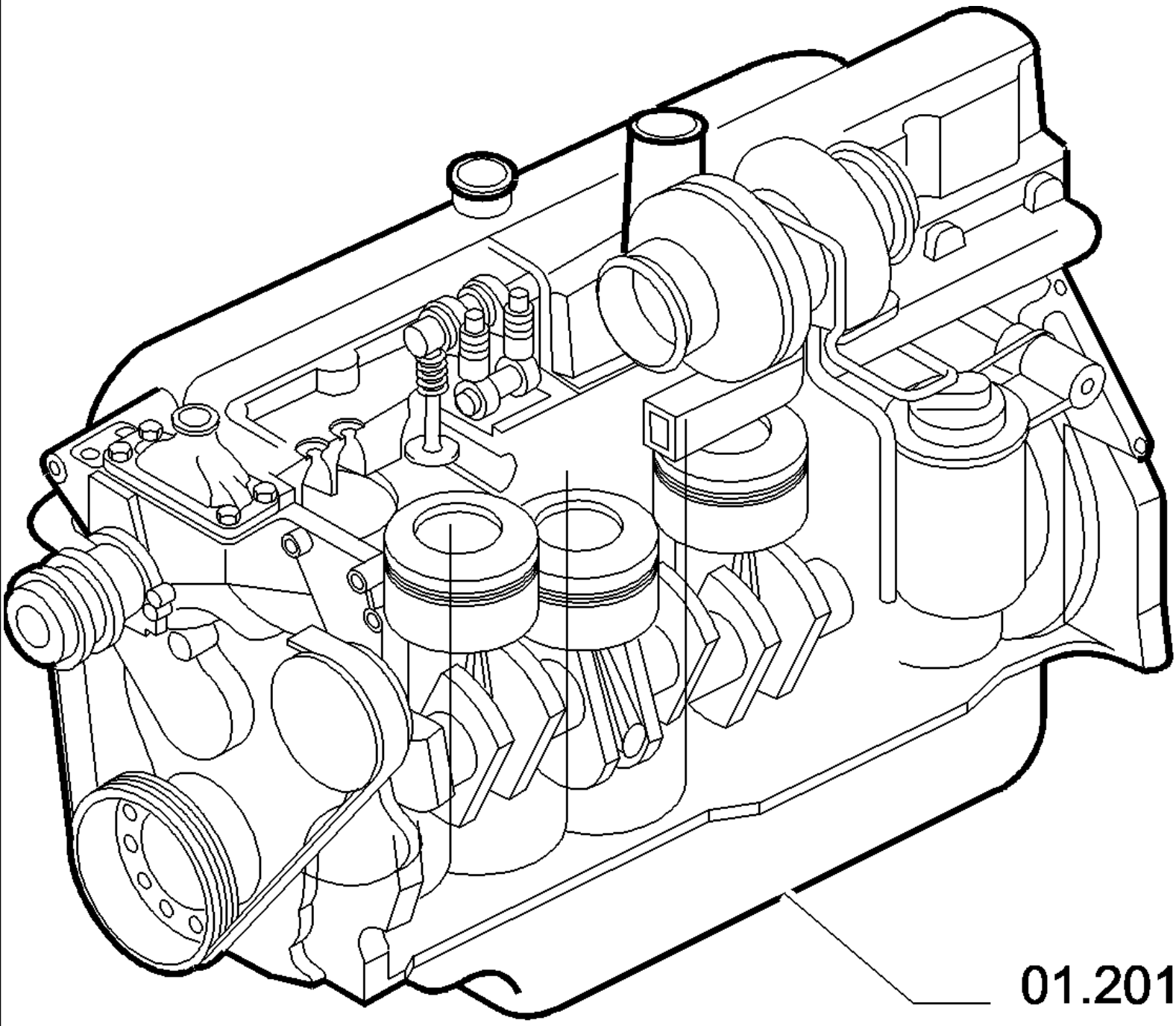
01.201

0.0017(01) SECTION LIST 1

ссылка	Номер детали	Кол-во	Описание

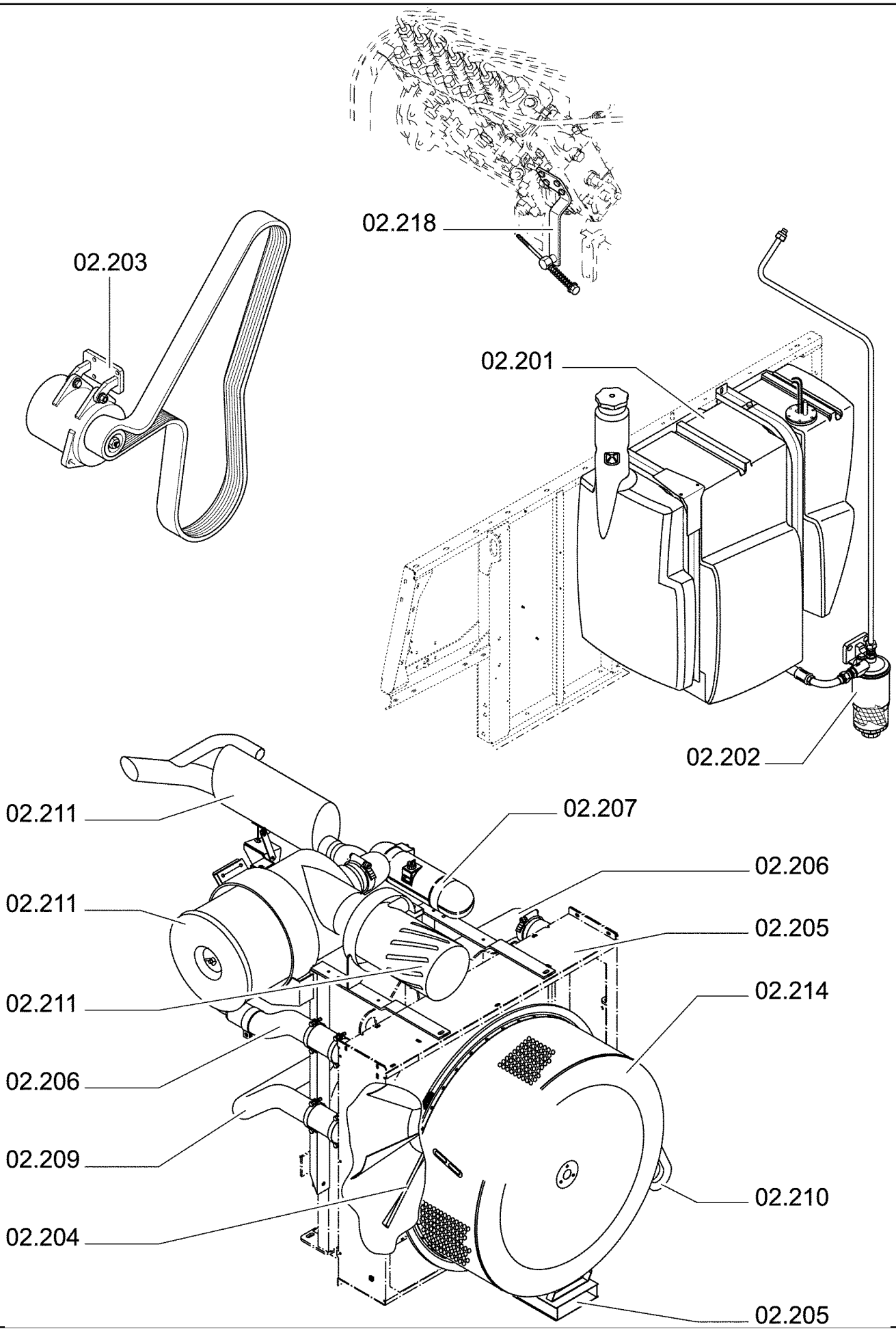
02.218
02.203
02.201
02.202
02.211
02.207
02.206
02.211
02.205
02.211
02.214
02.206
02.209
02.210
02.204
02.205

ссылка	Номер детали	Кол-во	Описание

ENGINE EQUIPMENT	**EQUIPEMENT MOTEUR**	**EQUIPO MOTOR**	**MOTORUDSTYR**
EQUIPAGGIAMENTO MOTORE	**MOTORAUSRÜSTUNG**	**EQUIPAMENTO DO MOTOR**	**MOTORUITRUSTING**

SEC. 2

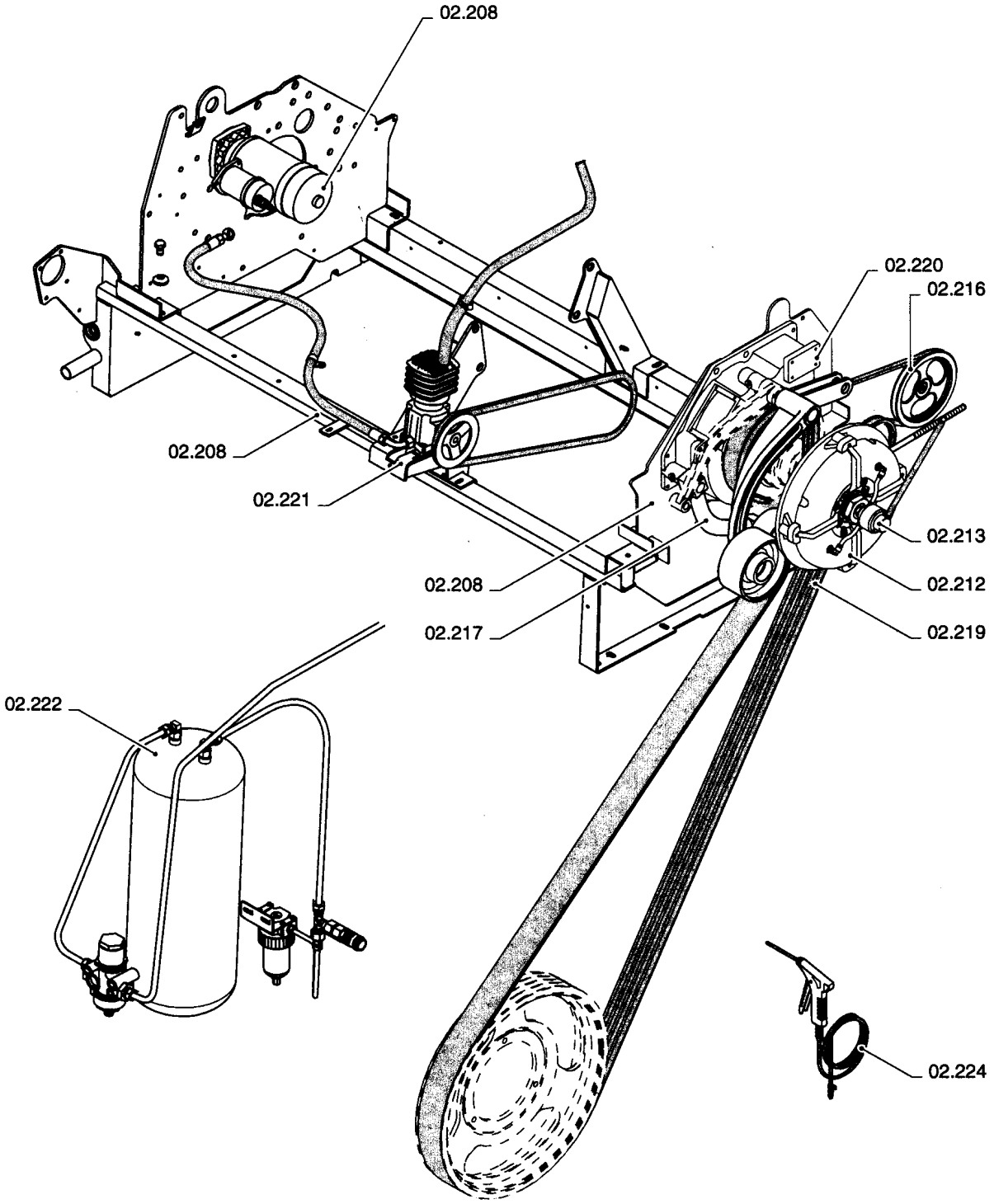

0.0018A(01) SECTION LIST 2

ссылка	Номер детали	Кол-во	Описание

TRANSMISSION	**TRANSMISSION**	**TRANSMISION**	**TRANSMISSION**
TRANSMISSION	**TRANSMISSION**	**TRANSMISSÃO**	**TRANSMISSIE**

SEC. 3

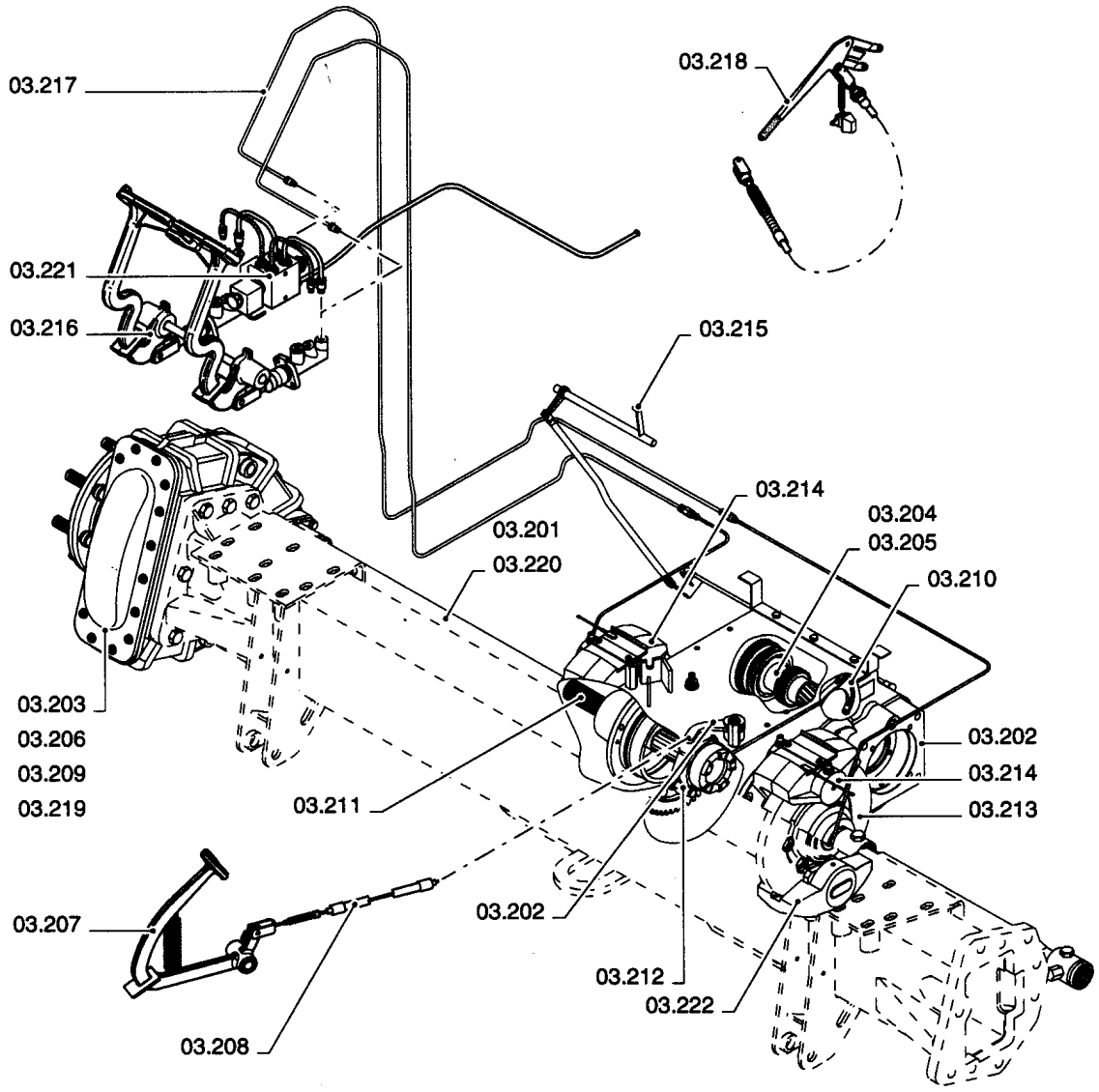

ссылка	Номер детали	Кол-во	Описание

FRONT AXLE	**ESSIEU AVANT**	**EJE DELANTERO**	**FORAKSEL**
ASSALE ANTERIORE	**VORDERACHSE**	**EIXO DIANTIERO**	**VOORAS**

SEC. 4

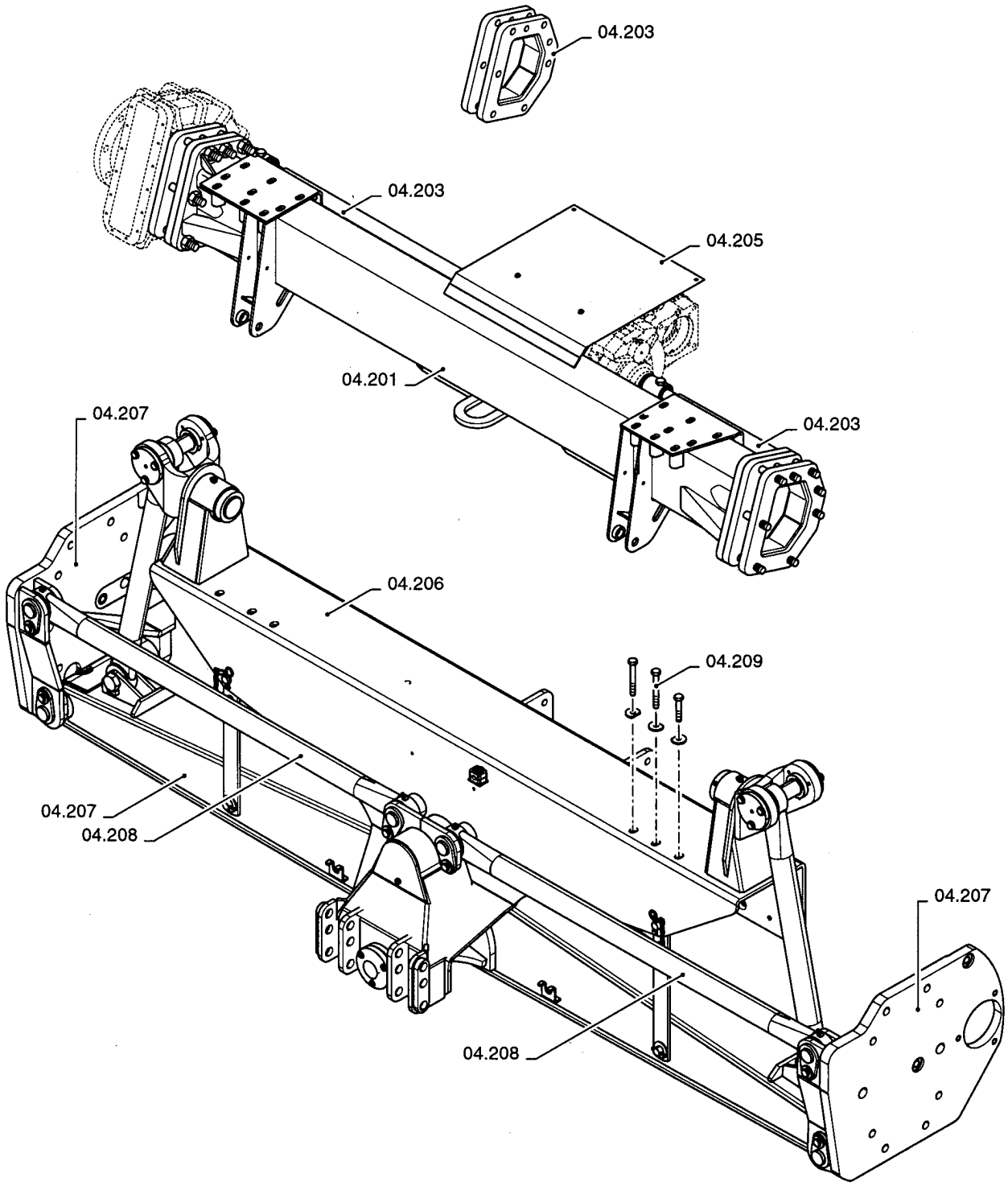

ссылка	Номер детали	Кол-во	Описание

REAR AXLE	**ESSIEU POSTÉRIEUR**	**EJE POSTERIOR**	**MANCANTE**
ASSALE POSTERIORE	**HINTERACHSE**	**PONTE TRASEIRO**	**ACHTERAS**

SEC. 5

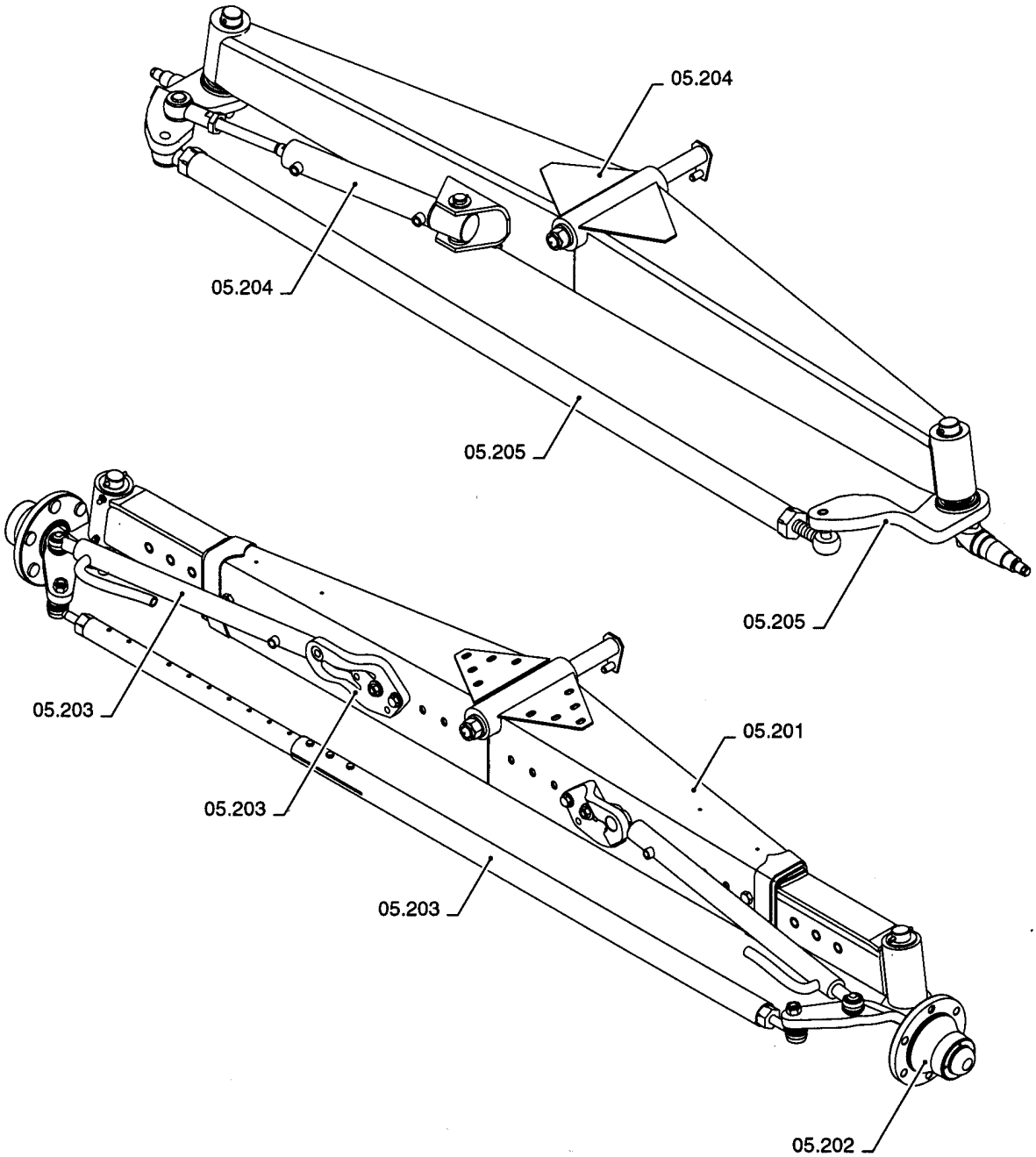

ссылка	Номер детали	Кол-во	Описание

REAR AXLE	**ESSIEU POSTÉRIEUR**	**EJE POSTERIOR**	**MANCANTE**
ASSALE POSTERIORE	**HINTERACHSE**	**PONTE TRASEIRO**	**ACHTERAS**

SEC. 5

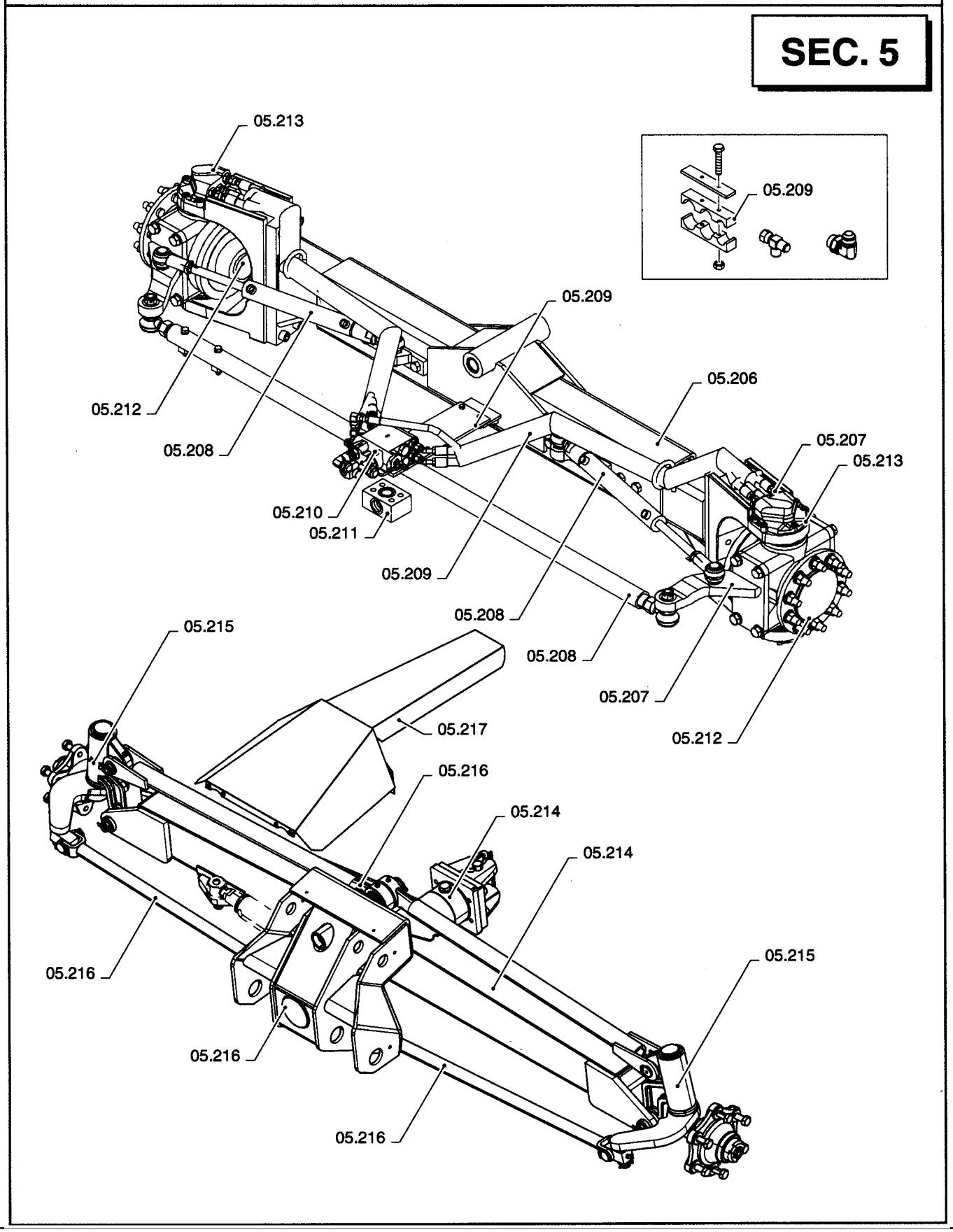

ссылка	Номер детали	Кол-во	Описание

ELECTRICAL SYSTEM **SYSTÈME ELECTRIQUE** **SISTEMA ELÉCTRICO** **ELECTRISK SYSTEM**

SISTEMA DI ELETTRICO **ELEKTRISCHES SYSTEME** **SISTEMA ELÉCTRICA** **ELEKTRISCH SYSTEEM**

SEC. 6

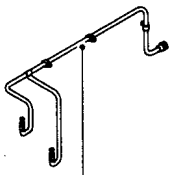
06.201

06.202

06.203

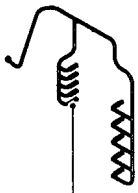
06.204

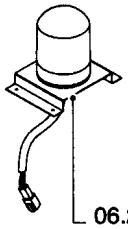
06.205

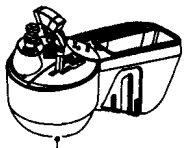
06.206
06.207
06.208

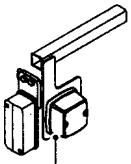
06.209

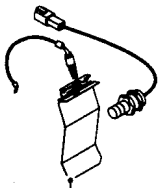
06.210

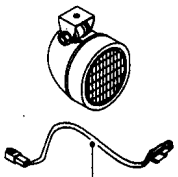
06.211

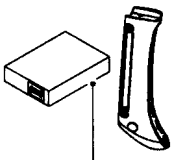
06.212

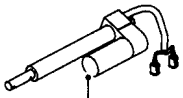
06.213

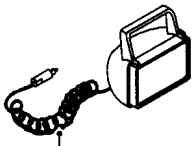
06.214

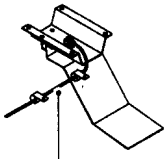
06.215

06.216

06.217

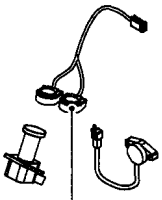
06.218

06.219

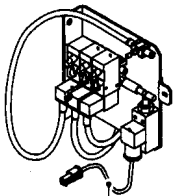
06.220

06.221

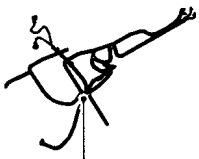
06.222

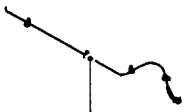
06.223

06.224

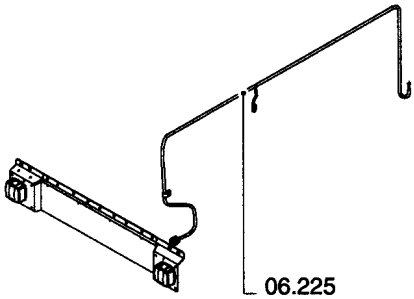
06.225

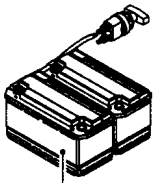
06.226

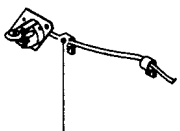
06.227

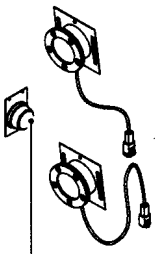
06.228

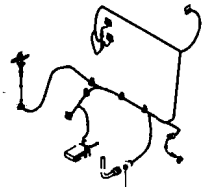
06.229

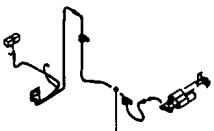
06.230

ссылка	Номер детали	Кол-во	Описание

ELECTRICAL SYSTEM	**SYSTÈME ELECTRIQUE**	**SISTEMA ELÉCTRICO**	**ELECTRISK SYSTEM**
SISTEMA DI ELETTRICO	**ELEKTRISCHES SYSTEME**	**SISTEMA ELÉCTRICA**	**ELEKTRISCH SYSTEEM**

SEC. 6

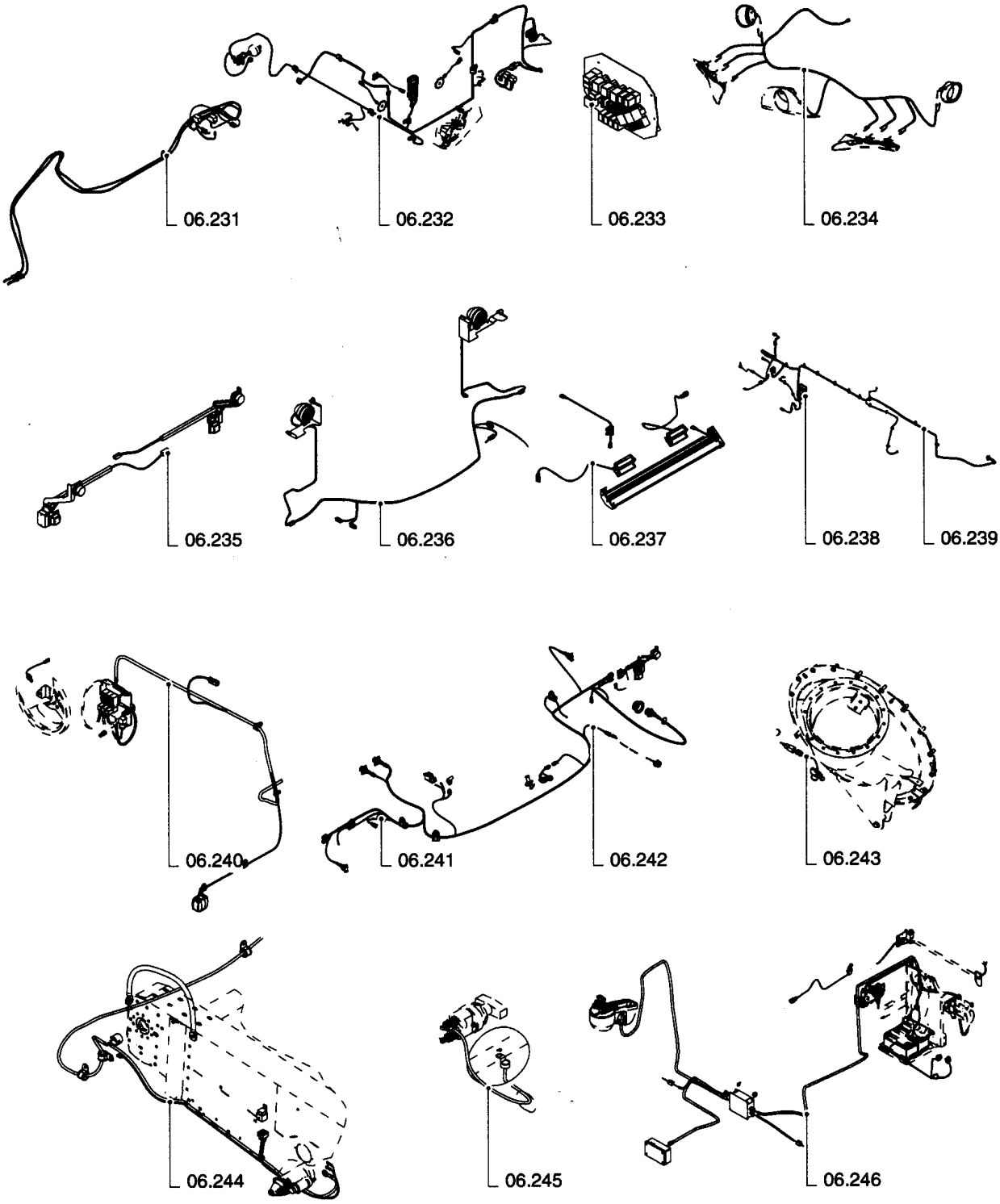

ссылка	Номер детали	Кол-во	Описание

ELECTRICAL SYSTEM **SYSTÈME ELECTRIQUE** **SISTEMA ELÉCTRICO** **ELECTRISK SYSTEM**

SISTEMA DI ELETTRICO **ELEKTRISCHES SYSTEME** **SISTEMA ELÉCTRICA** **ELEKTRISCH SYSTEEM**

SEC. 6

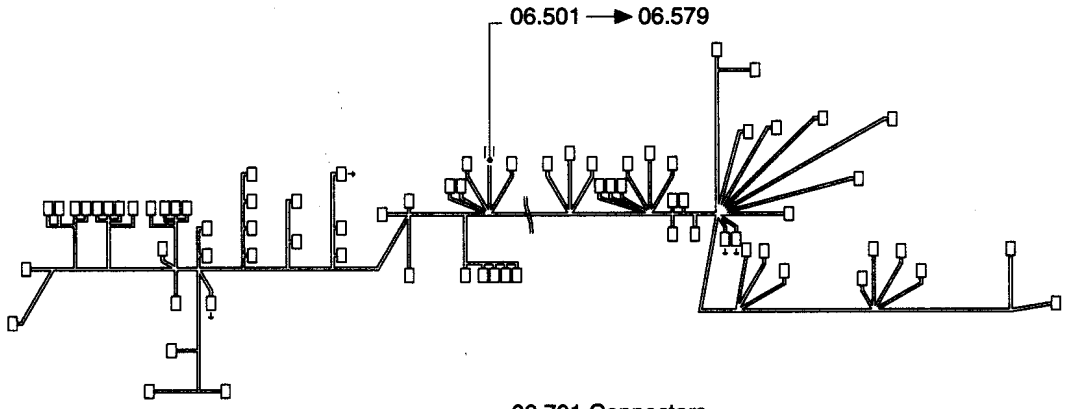

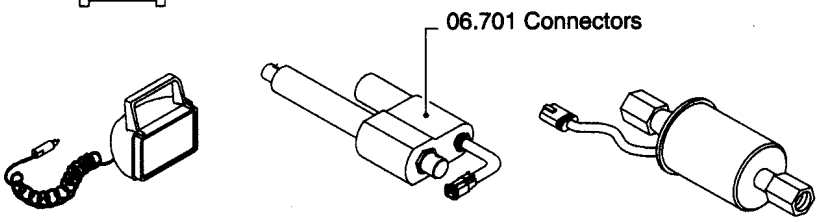

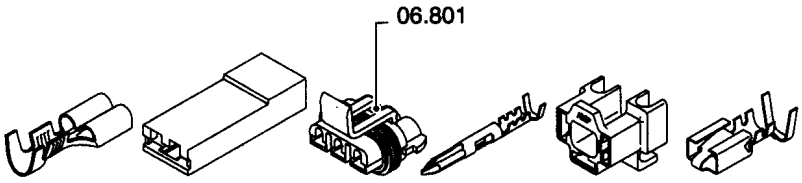

сылка	Номер детали	Кол-во	Описание

HYDRAULIC SYSTEMS	INSTALLATION HYDRAULIQUE	INSTALACIÓN HIDRÁULICA	HYDRAULIKANLÆG
IMPIANTO IDRAULICA	HYDRAULISCHE ANLAGE	INSTÁLAÇION HIDRÁULICA	HYDRAULISCH SYSTEEM

SEC. 7

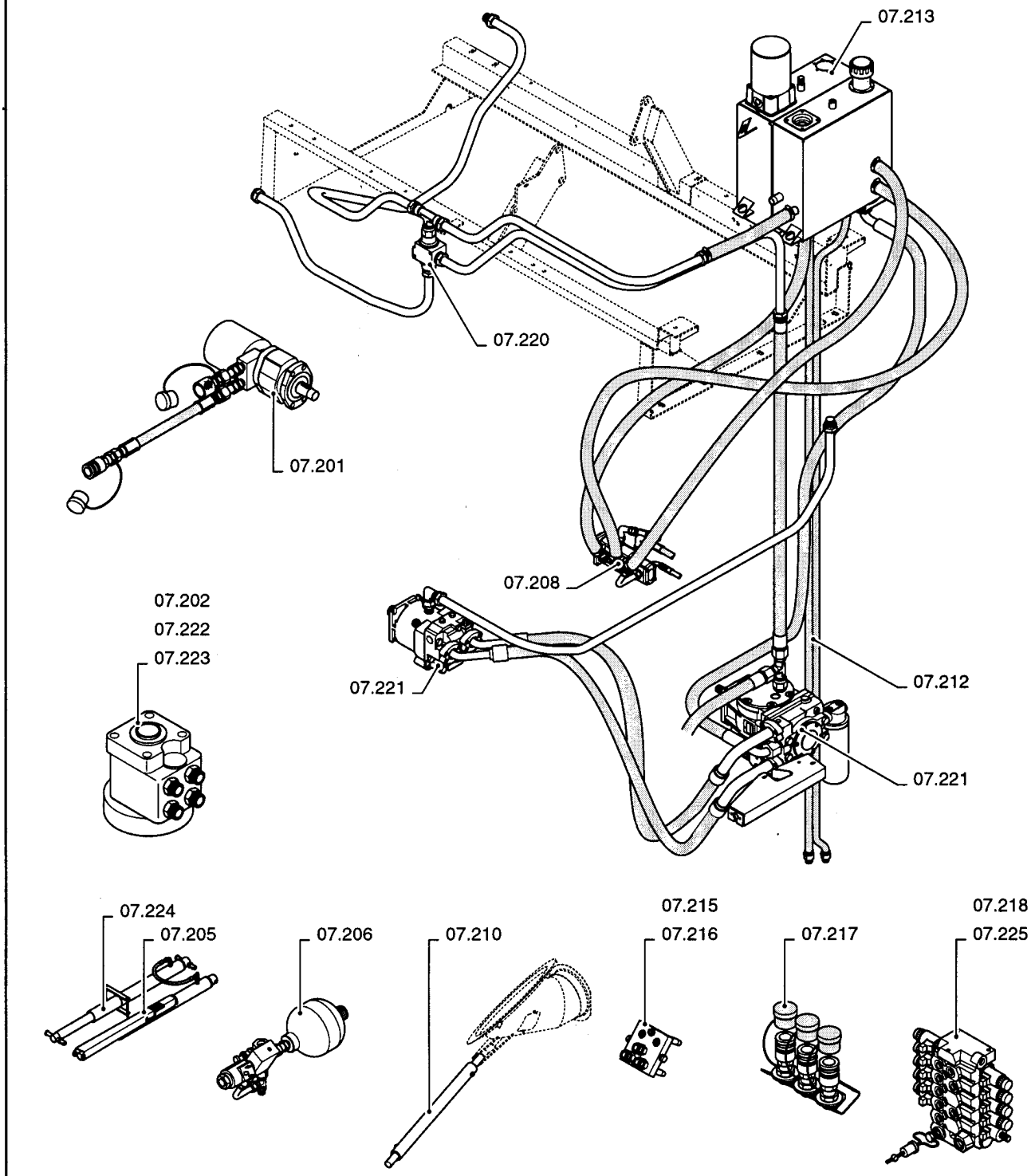

ссылка	Номер детали	Кол-во	Описание

HYDRAULIC SYSTEMS	**INSTALLATION HYDRAULIQUE**	**INSTALACIÓN HIDRÁULICA**	**HYDRAULIKANLÆG**
IMPIANTO IDRAULICA	**HYDRAULISCHE ANLAGE**	**INSTÁLAÇION HIDRÁULICA**	**HYDRAULISCH SYSTEEM**

SEC. 7

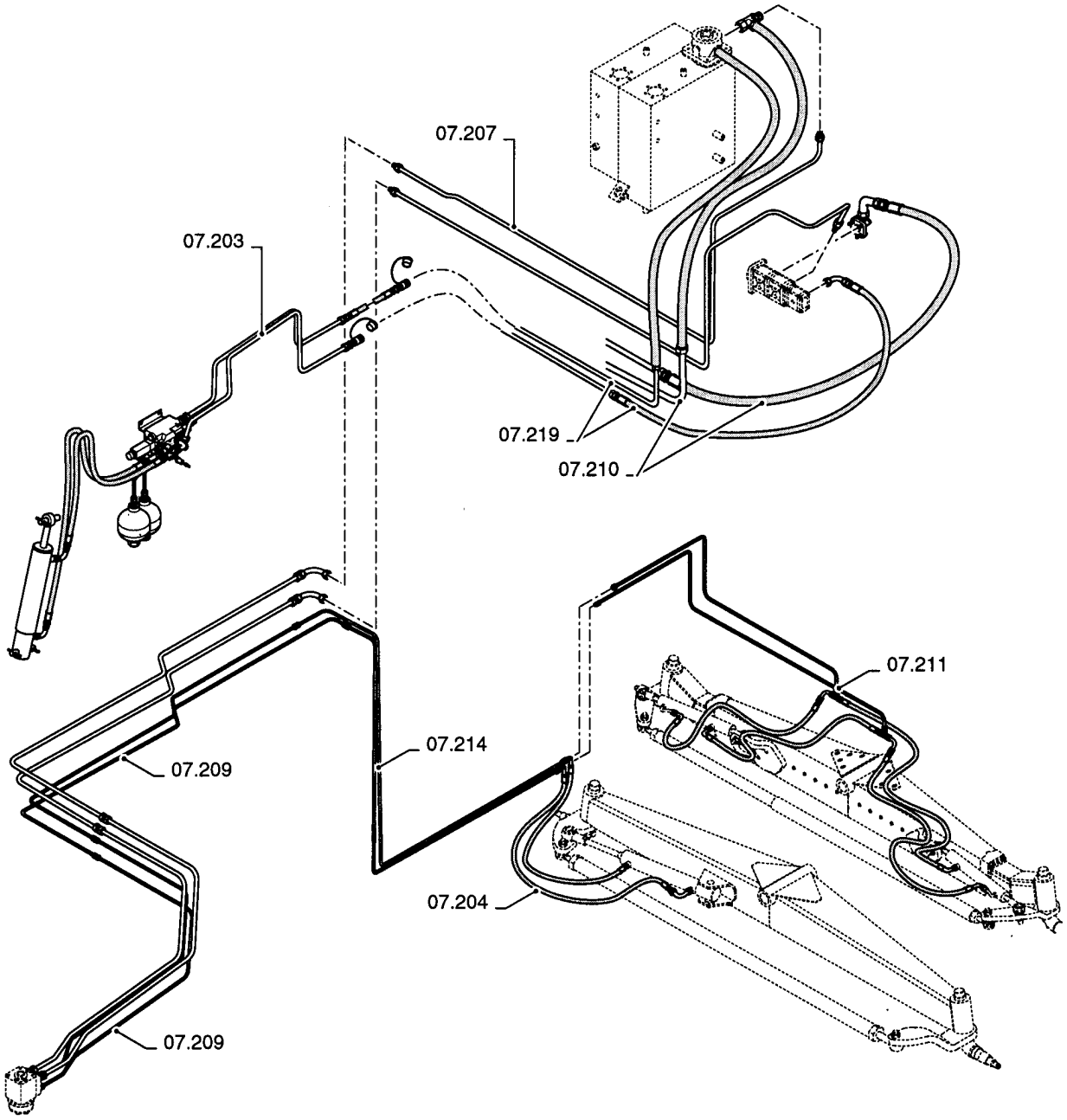

ссылка	Номер детали	Кол-во	Описание

SHEET METAL/DECALS	REVÊTEMENTS EN TÔLE DÉCALCOMANIE	CHAPEADOS/CALCOMANÍAS	METALPLADEBEKLÆDN. MÆRKATER
LAMIERATI DECALCOMANIE	BLECHVERKLEIDUNGEN ABZIEHBILDER	REVESTIMENTOS EM CHAPAS/DECALCOMANIAS	METALEN PLATEN PLAKPLAATJES

SEC. 8

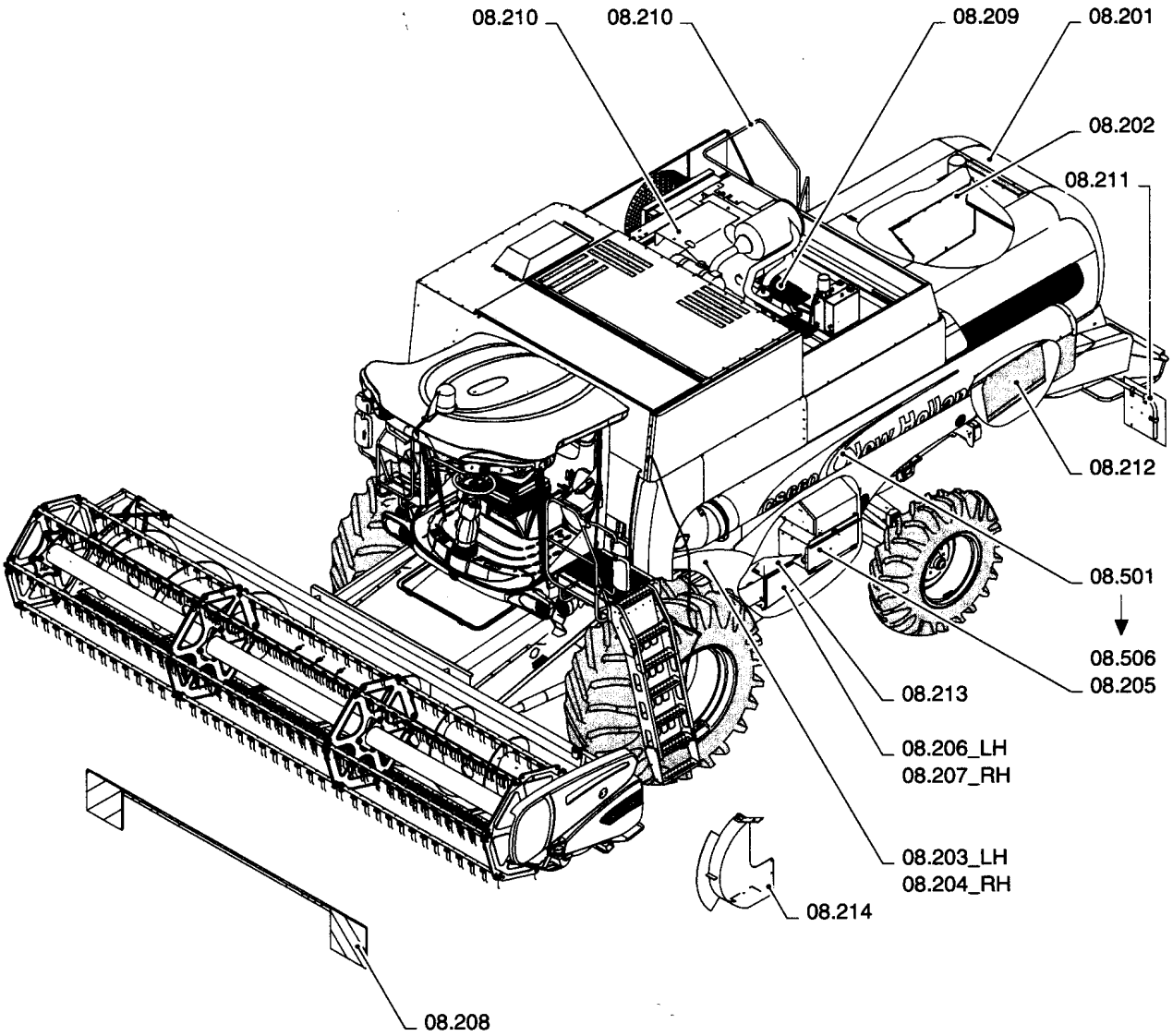

ссылка	Номер детали	Кол-во	Описание

LUBRICATION	**LUBRIFICATRICE**	**LUBRIFICAR**	**SMØRING**
LUBRIFICANTE	**SCHMIERING**	**LUBRIFICANTE**	**SMERING**

SEC. 9

ссылка	Номер детали	Кол-во	Описание

CAB	**CABINE**	**CABINA**	**CAB**
CABINA	**KABINE**	**CABINA**	**CABINE**

SEC. 10

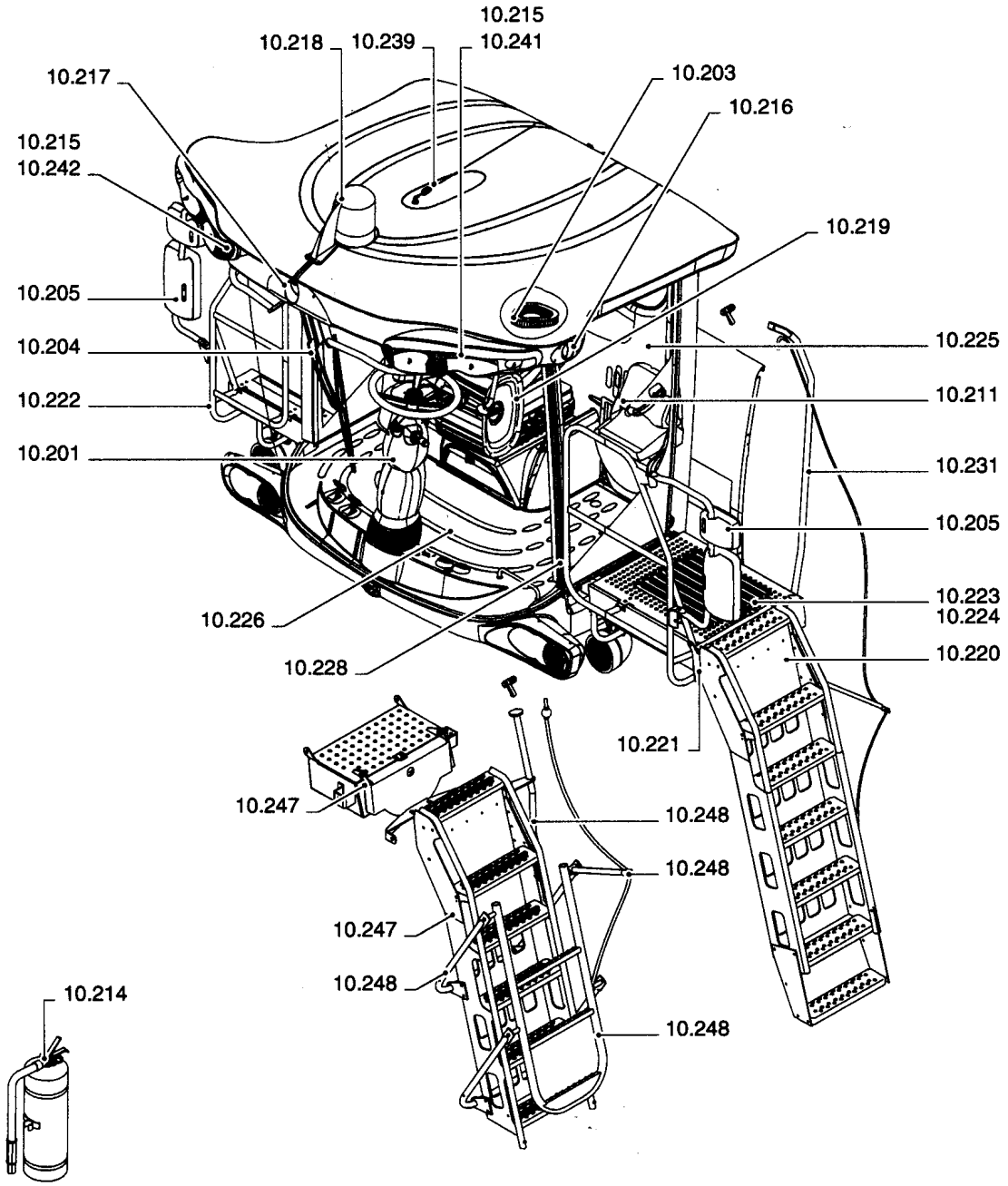

ссылка	Номер детали	Кол-во	Описание

CAB	**CABINE**	**CABINA**	**CAB**
CABINA	**KABINE**	**CABINA**	**CABINE**

SEC. 10

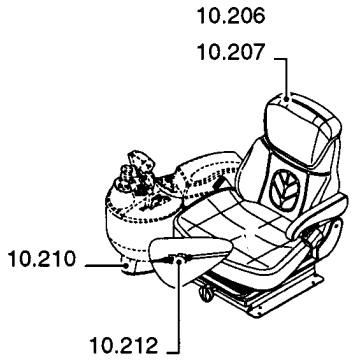

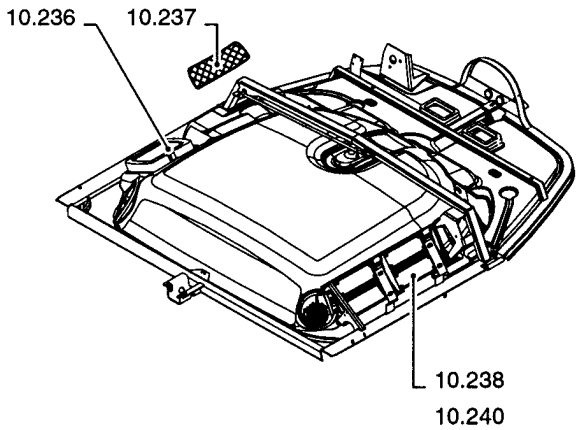

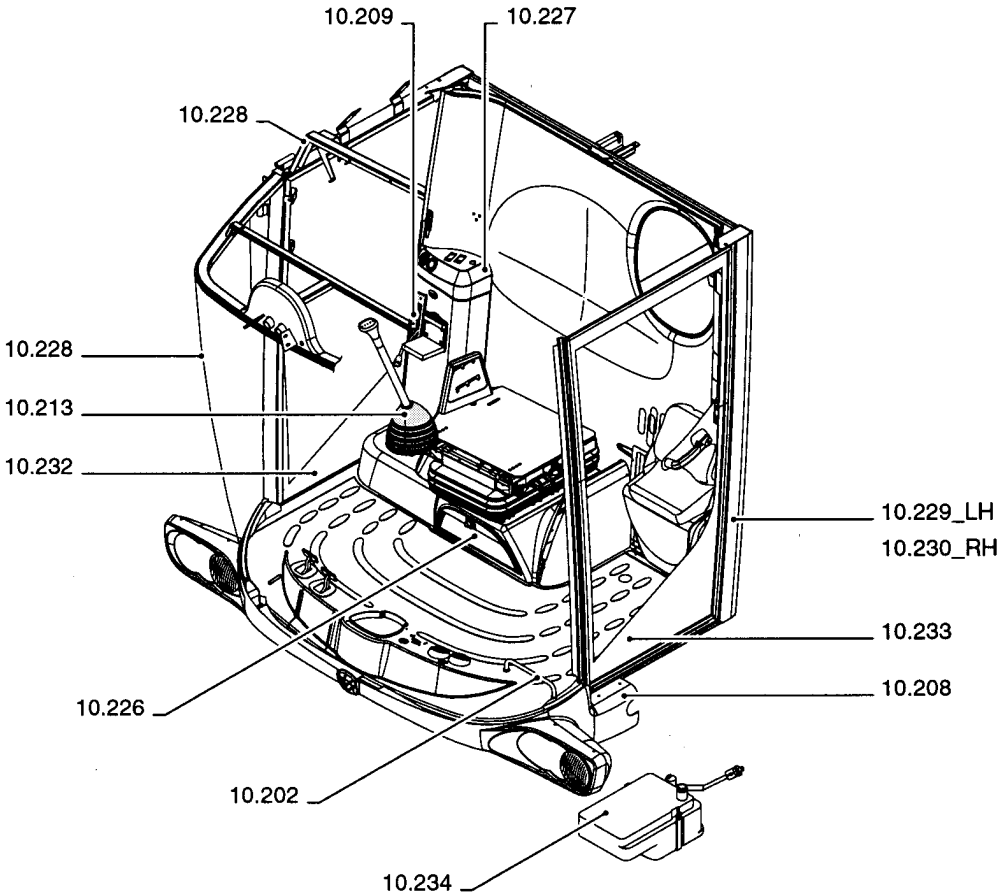

ссылка	Номер детали	Кол-во	Описание

CAB	**CABINE**	**CABINA**	**CAB**
CABINA	**KABINE**	**CABINA**	**CABINE**

SEC. 10

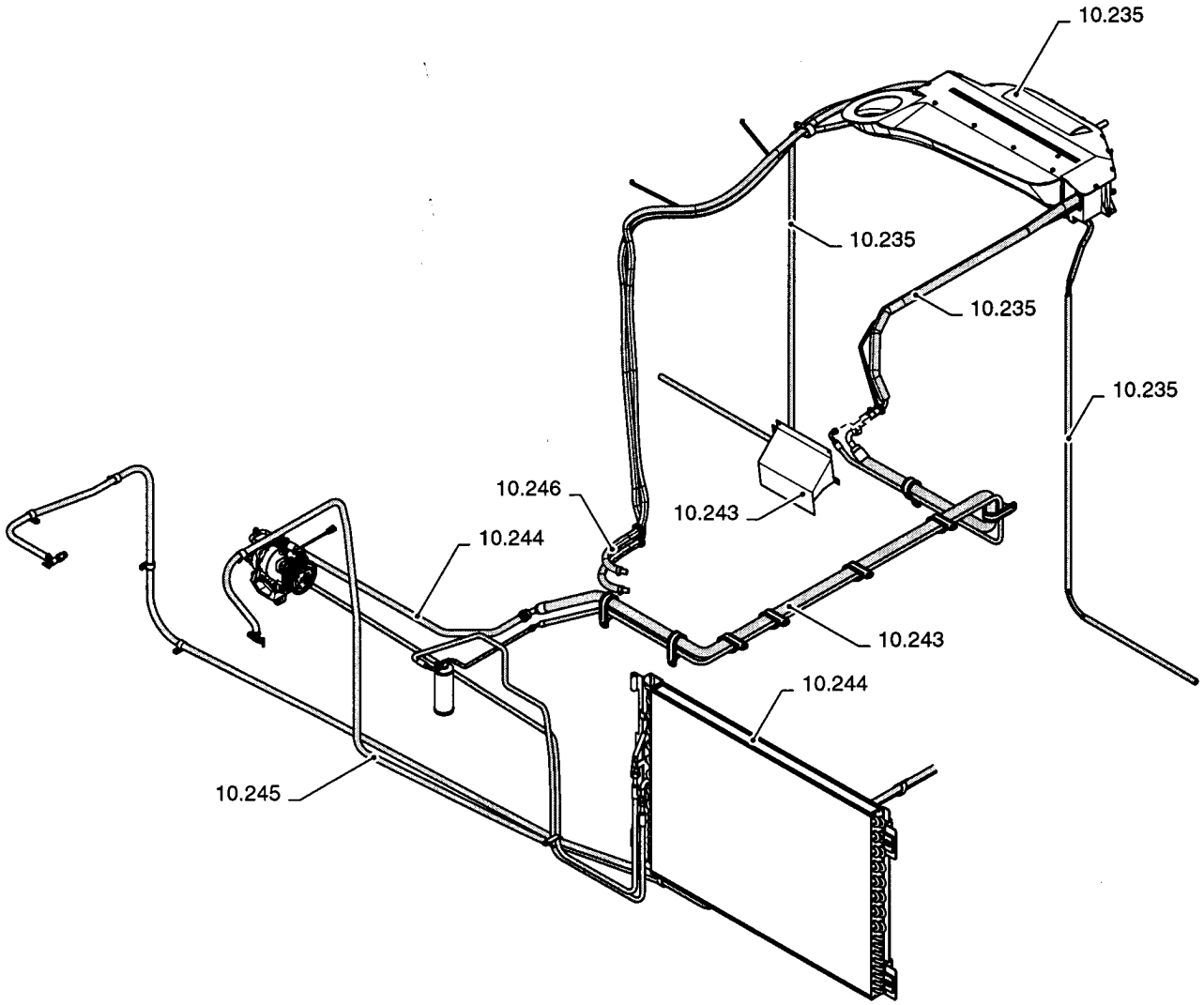

сылка	Номер детали	Кол-во	Описание

WHEELS/TRACKS	**ROUES/CHENILLES**	**RUEDAS/ORUGAS**	**HJUL/BÆLTETRÆK**
RUOTI/CINGOLATURA	**RÄDER/RAUPENKETTEN**	**RODAS/RASTOS**	**WIELEN/RUPSBANDEN**

SEC. 11

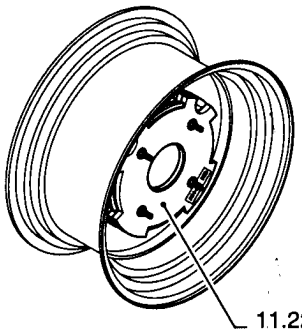

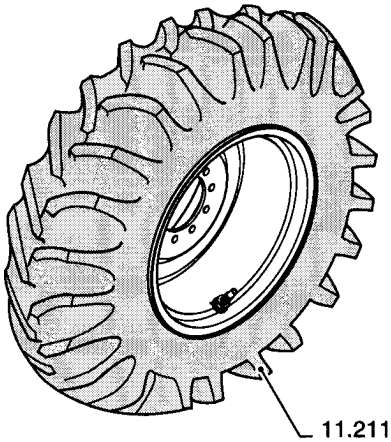

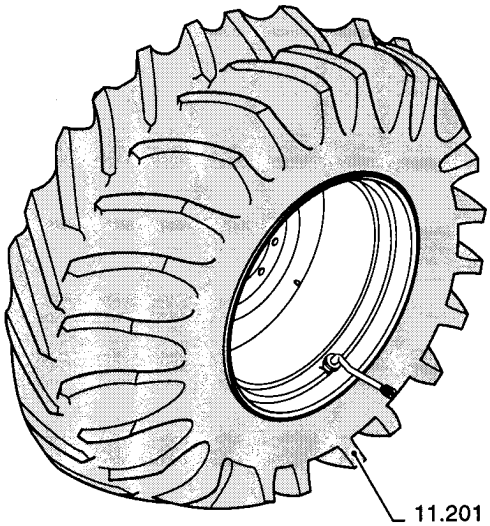

ссылка	Номер детали	Кол-во	Описание

MAIN FRAME	**CHÂSSIS PRINCIPAL**	**BASTIDOR PRINCIPAL**	**HOVEDRAMME**
TELAIO PRINCIPALE	**HAUPTGESTELL**	**ESTRUTURA PRINCIPAL**	**HOOFDRAAM**

SEC. 12

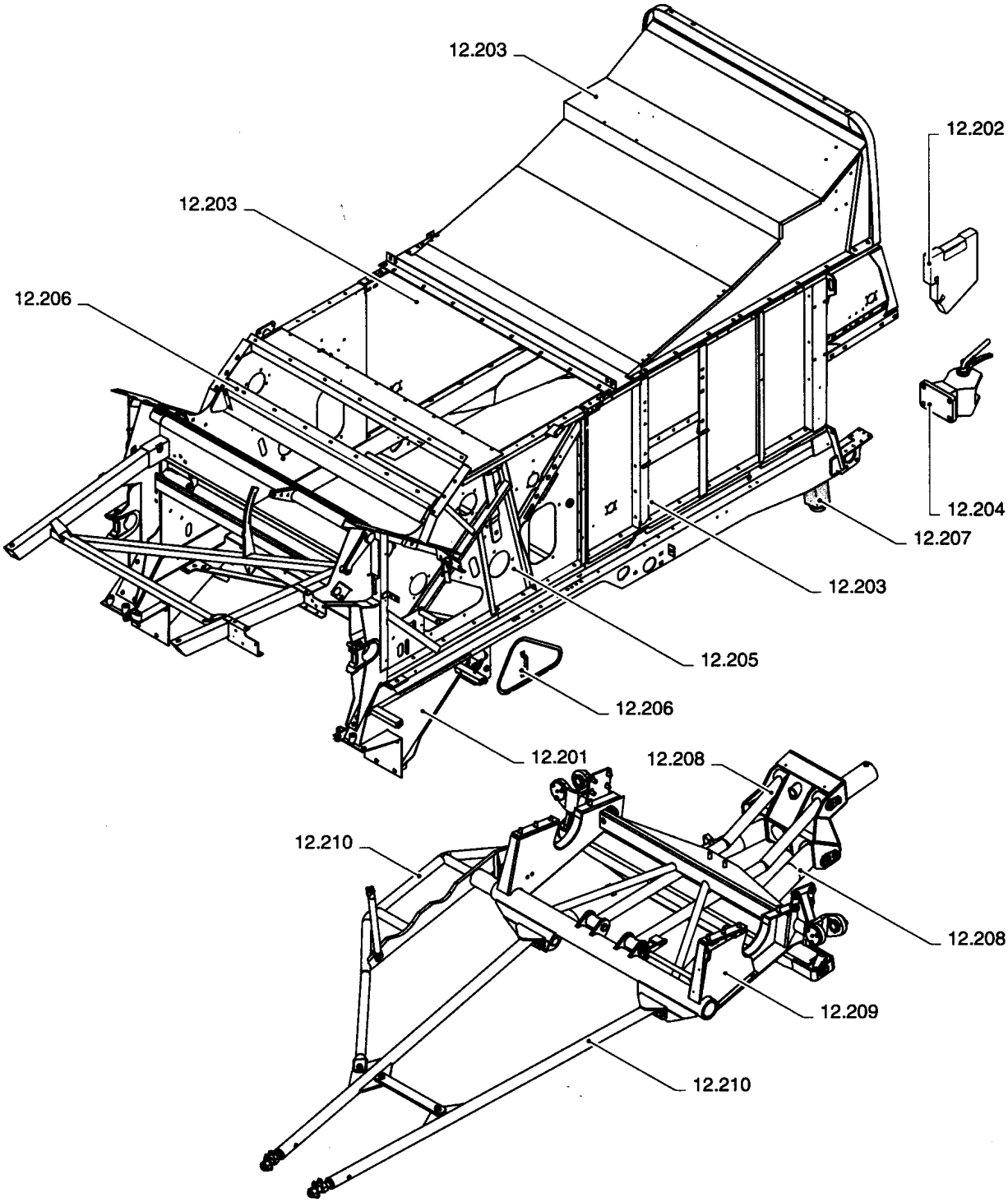

ссылка	Номер детали	Кол-во	Описание

STRAW ELEVATOR | **ELEVATEUR DE PAILLE** | **ELEVADOR DE PAJA** | **HALMELEVATOR**

CANALE ELEVATORE PAGLIA | **STROHFÖRDERER** | **ELEVADOR DE PALHA** | **STRO-ELEVATOR**

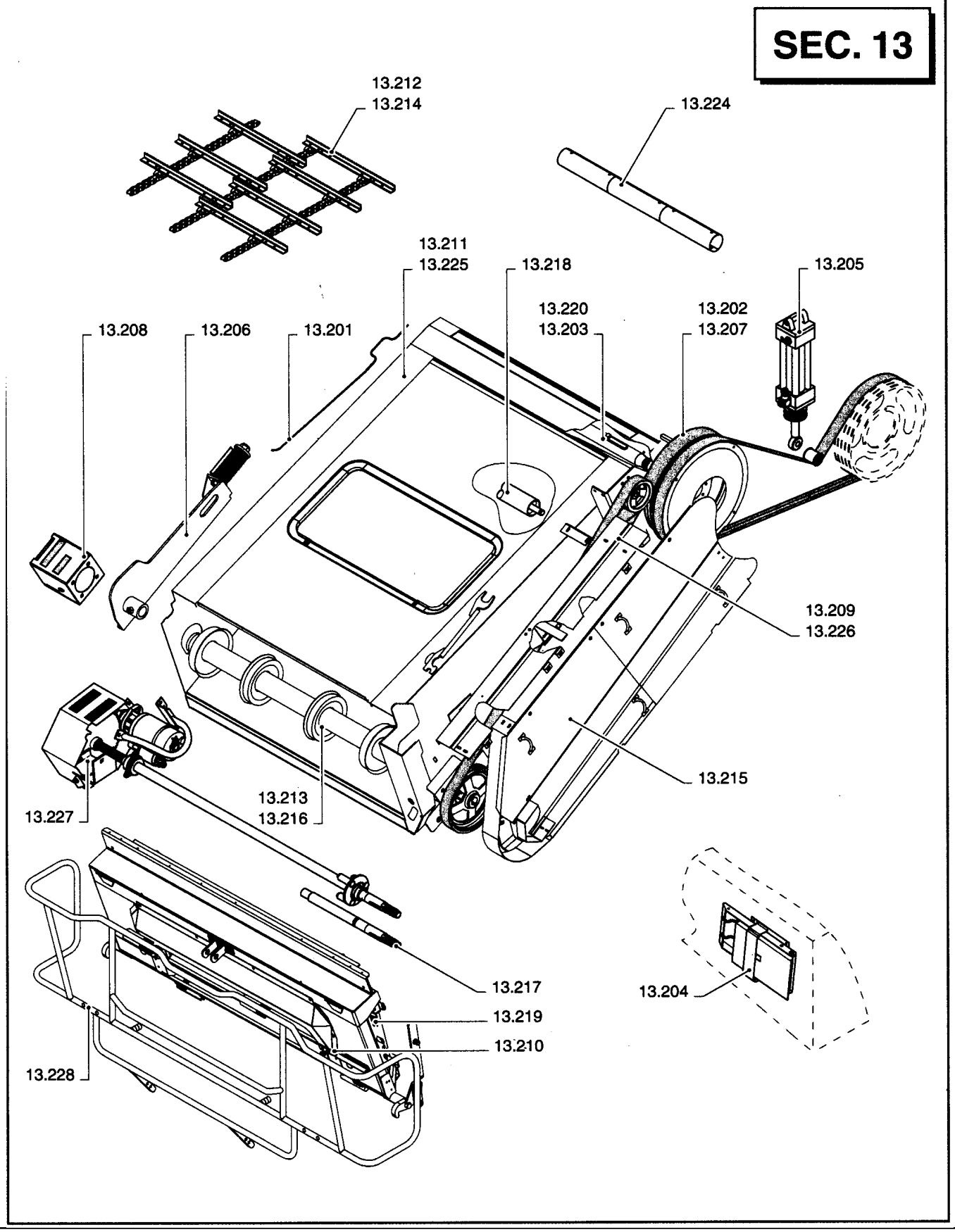

ссылка	Номер детали	Кол-во	Описание

THRESHING	**BATTAGE**	**TRILLA**	**TÆRSKNING**
TREBBIATURA	**DRUSCH**	**DEBULHA**	**DORSEN**

SEC. 14

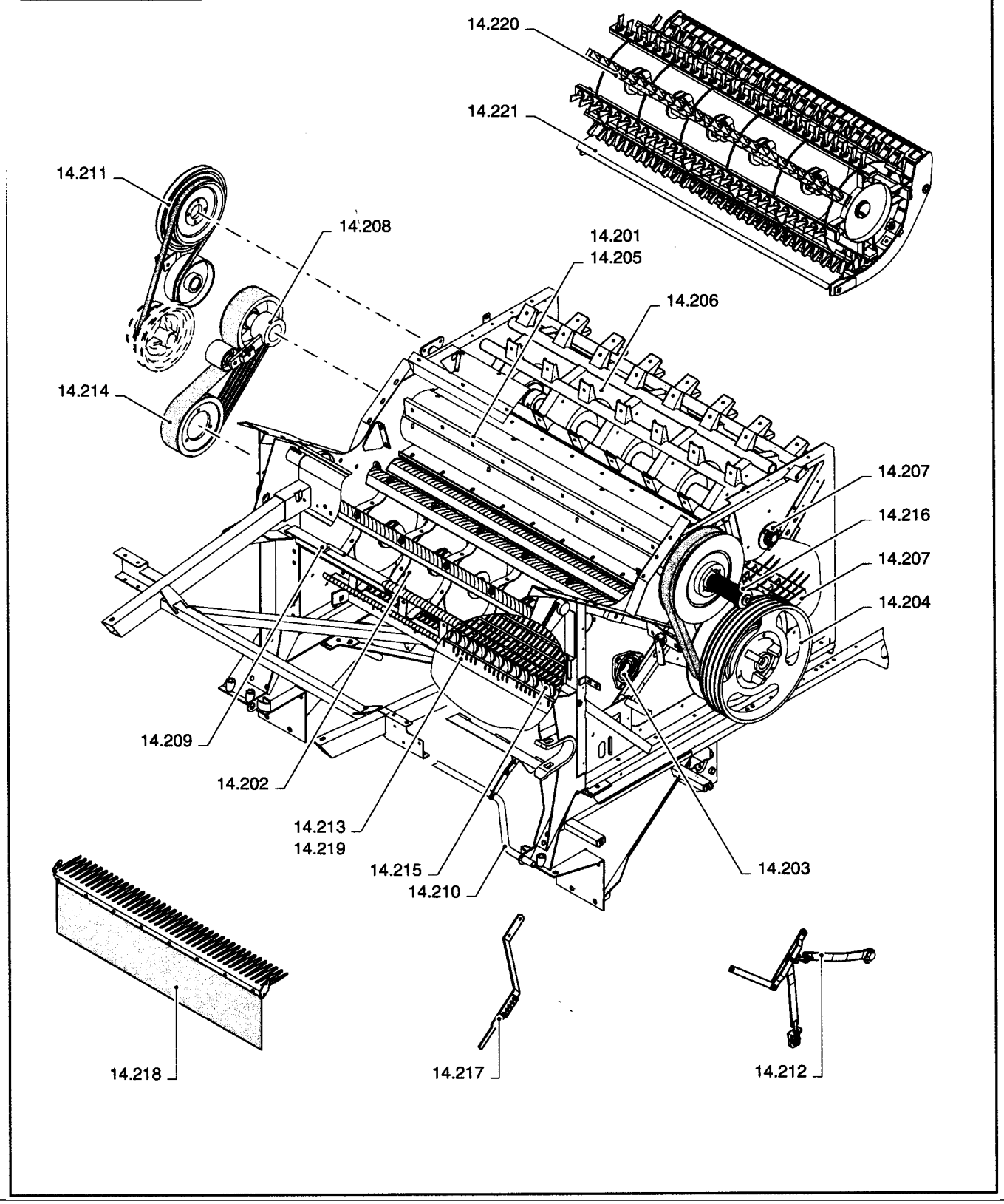

ссылка	Номер детали	Кол-во	Описание

CLEANING	**NETTOYAGE**	**LIMPIEZA**	**RENSNING**
PULITURA	**REINIGUNG**	**LIMPEZA**	**REINIGING**

SEC. 15

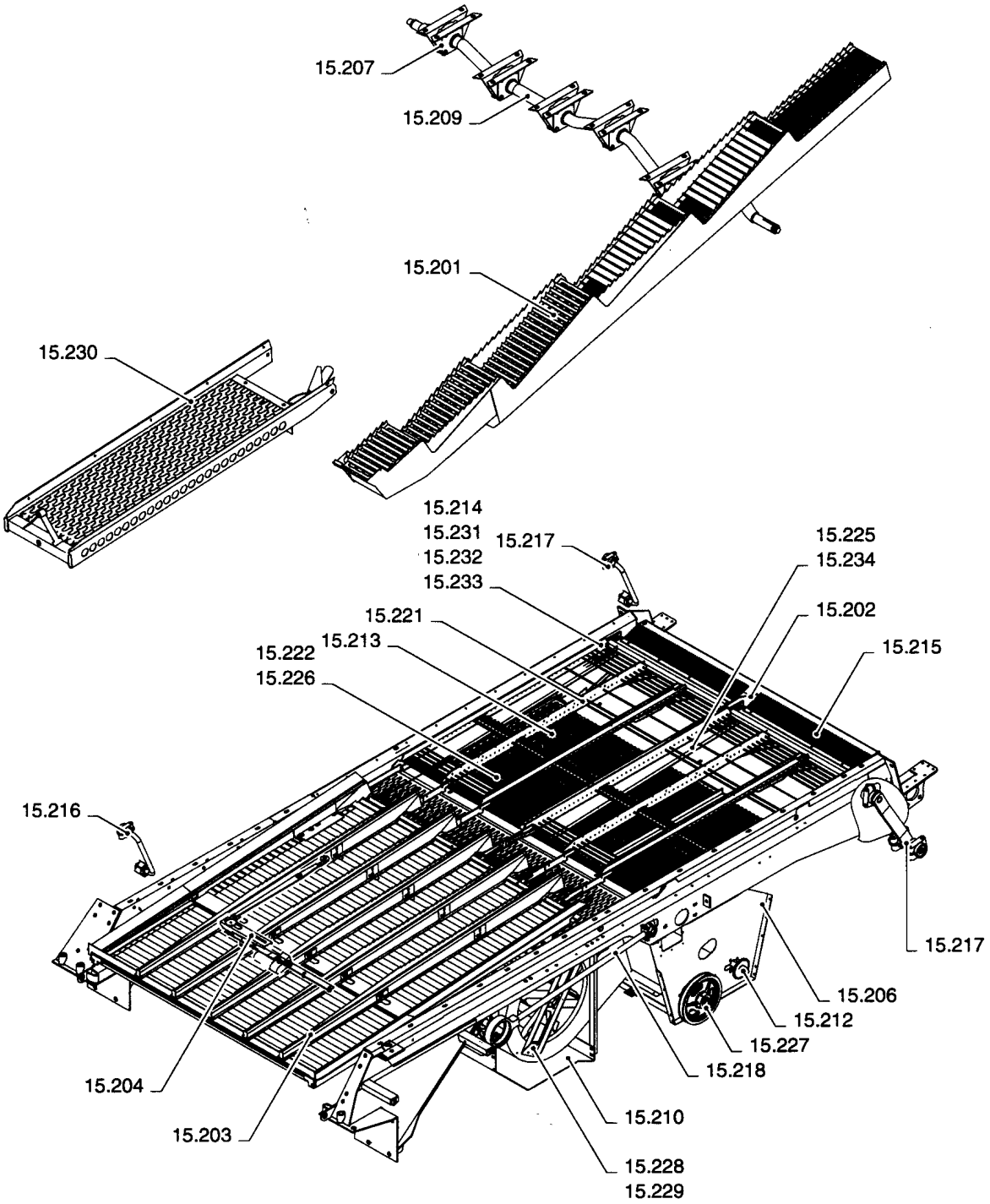

ссылка	Номер детали	Кол-во	Описание

CLEANING	**NETTOYAGE**	**LIMPIEZA**	**RENSNING**
PULITURA	**REINIGUNG**	**LIMPEZA**	**REINIGING**

SEC. 15

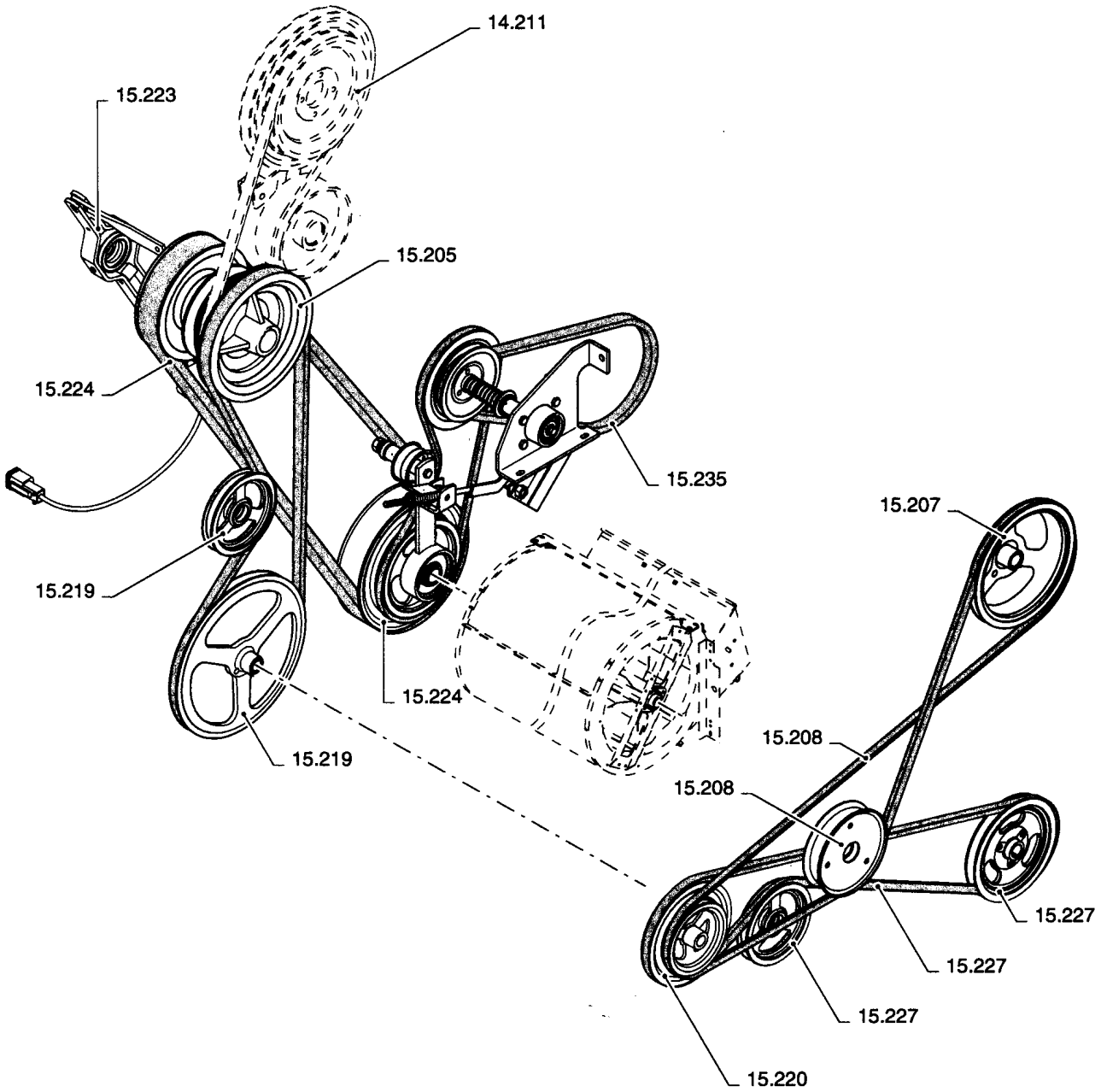

ссылка	Номер детали	Кол-во	Описание

UNLOADING	**VIDANGE**	**DESCARGA**	**TØMME**
SCARICO	**ENTLEERUNG**	**DESCARGA**	**ONTLADING**

SEC. 16

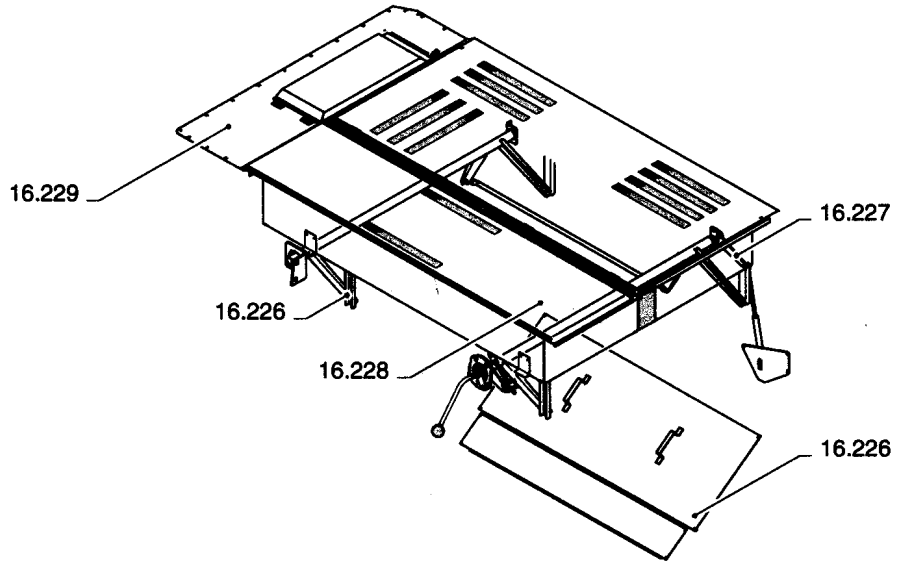

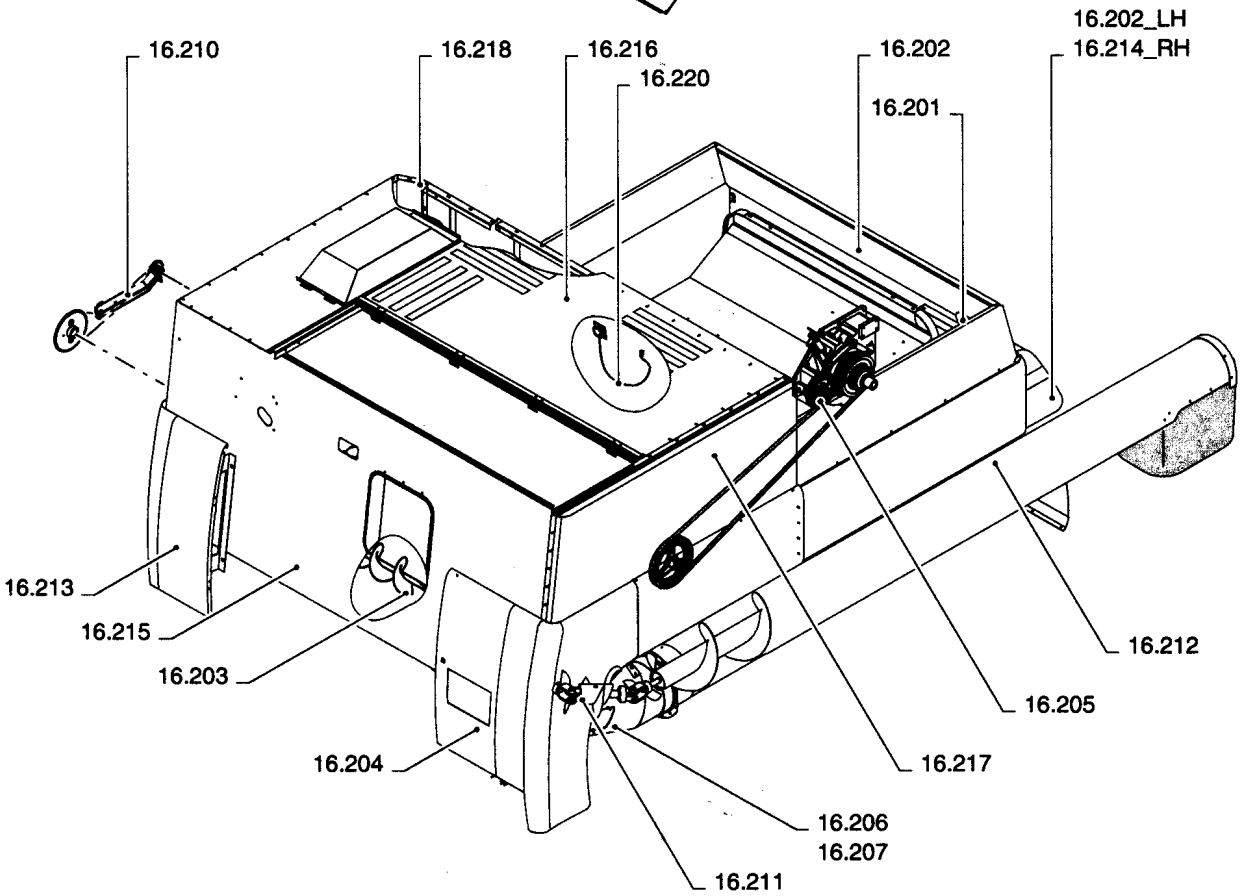

ссылка	Номер детали	Кол-во	Описание

UNLOADING	**VIDANGE**	**DESCARGA**	**TØMME**
SCARICO	**ENTLEERUNG**	**DESCARGA**	**ONTLADING**

SEC. 16

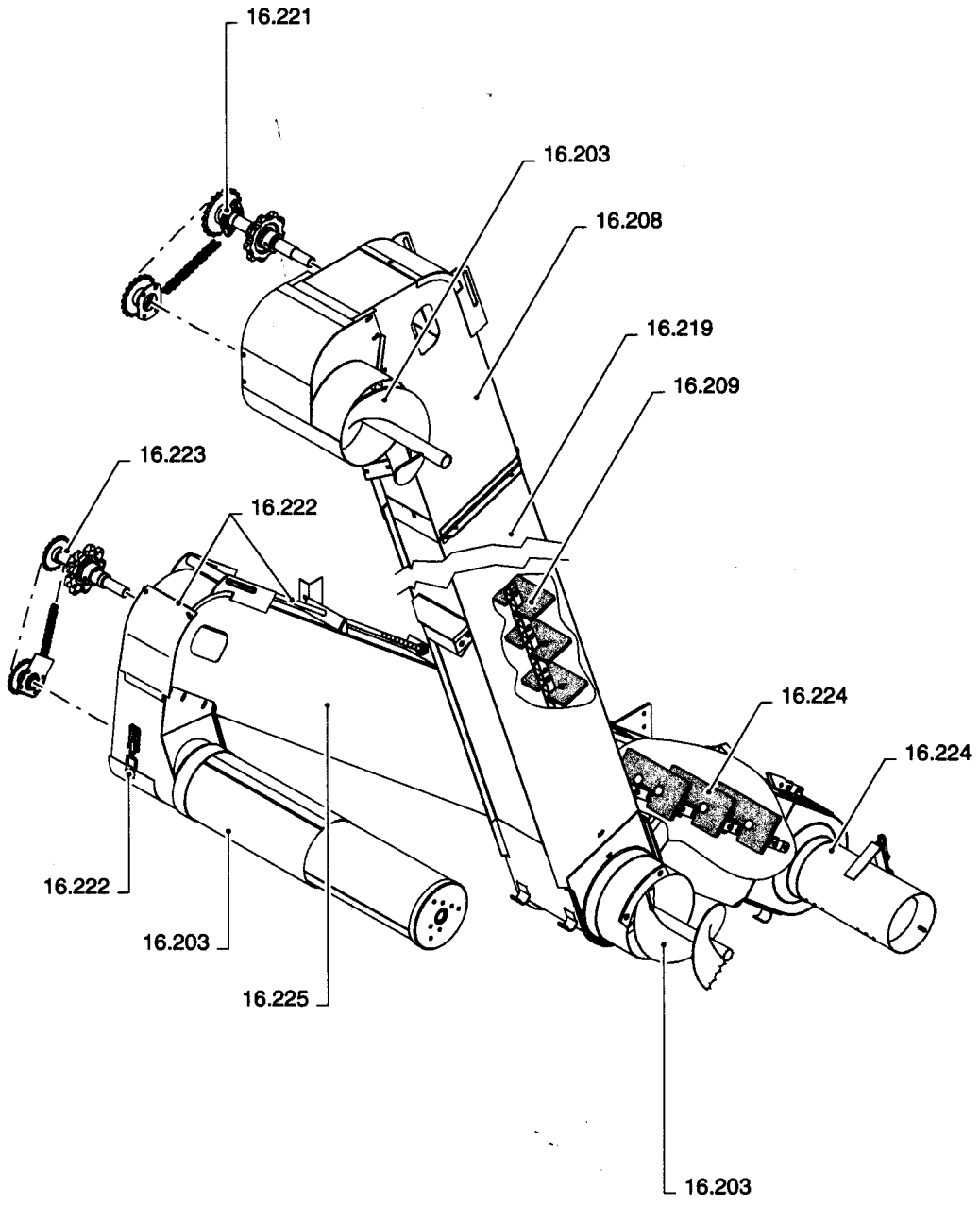

сылка	Номер детали	Кол-во	Описание

SECTIONS	SECTIONS	SECCIONES	AFSNIT
SEZIONI	ABSCHNITTE	SECÇÕES	SECTIES

SEC. 17

NOT APPLICABLE FOR THIS CATALOGUE
NON APPLICABILE PER QUESTO CATALOGO
PAS APPLICABLE POUR CE CATALOGUE
NICHT ANWENDBAR FÜR DIESEN KATALOG
NO APLICABLE PARA ESTE CATÁLOGO
NÃO APPLICABLE PARA NESTE CATÁLOGO
IKKE APLIKABEL FOR DENNE KATALOG
NIET VAN TOEPASSING VOOR DEZE CATALOGUS

ссылка	Номер детали	Кол-во	Описание

ACCESSORIES	**ACCESSOIRES**	**ACCESORIOS**	**TILBEHØR**
ACCESSORI	**ZUBEHÖR**	**ACESSORIOS**	**TOEBEHOREN**

SEC. 18

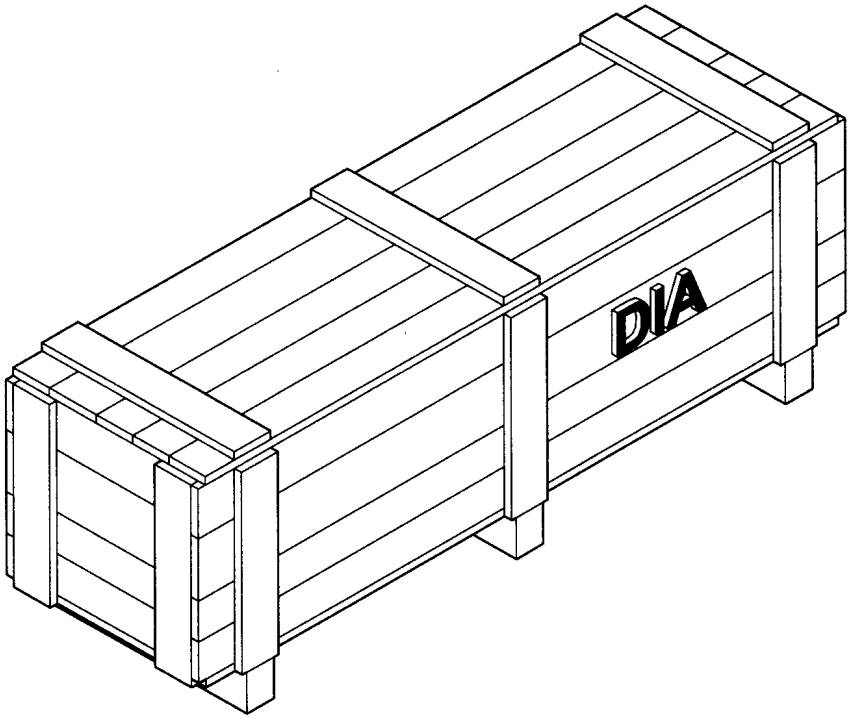

ссылка	Номер детали	Кол-во	Описание

ATTACHMENTS	**ACCESSOIRES**	**ACCESORIO**	**UDSTYR**
ACCESSORIO	**ZUBEHÖR**	**EQUIPAMENTOS**	**HULPSTUKKEN**

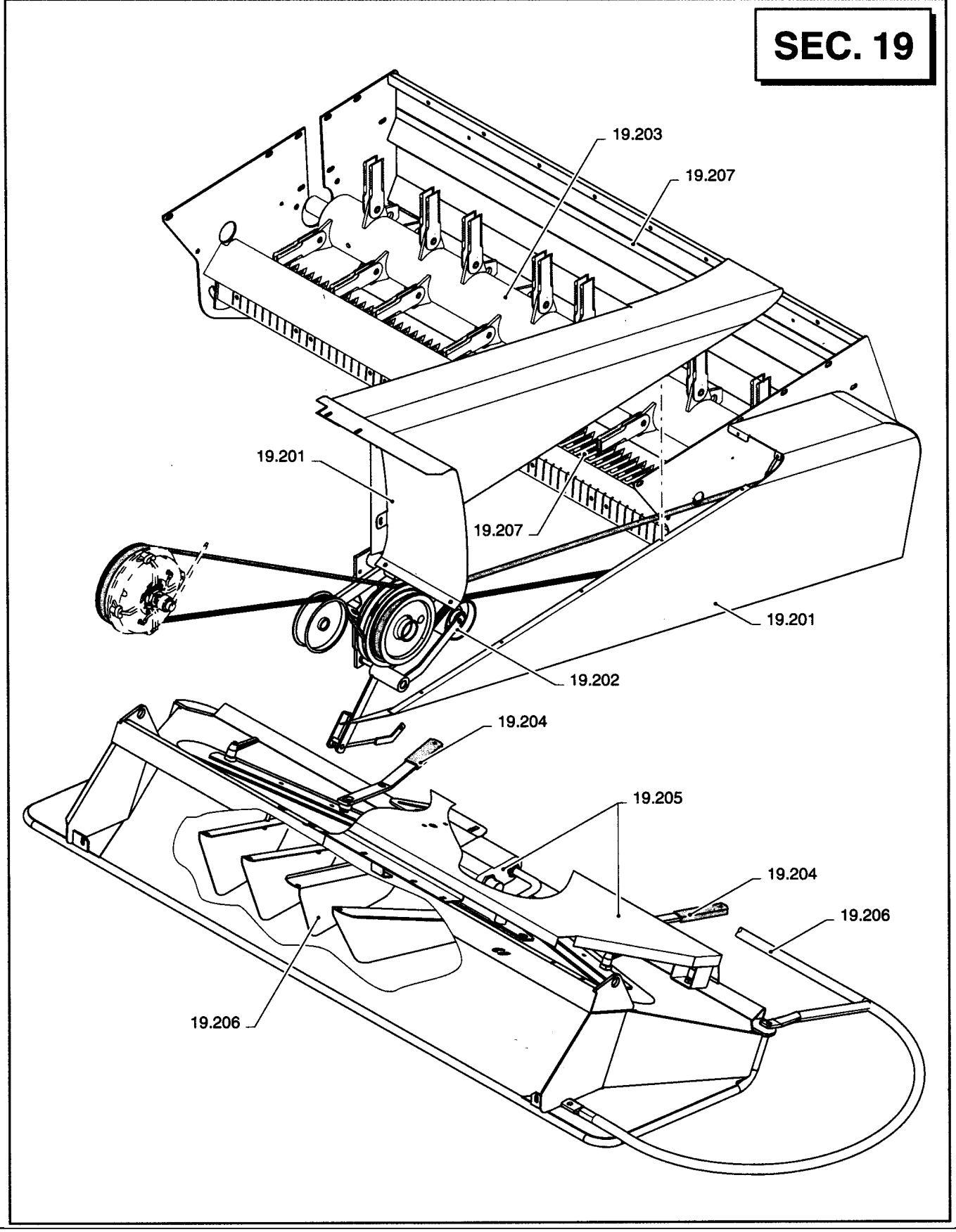

ссылка	Номер детали	Кол-во	Описание

ATTACHMENTS	**ACCESSOIRES**	**ACCESORIO**	**UDSTYR**
ACCESSORIO	**ZUBEHÖR**	**EQUIPAMENTOS**	**HULPSTUKKEN**

SEC. 19

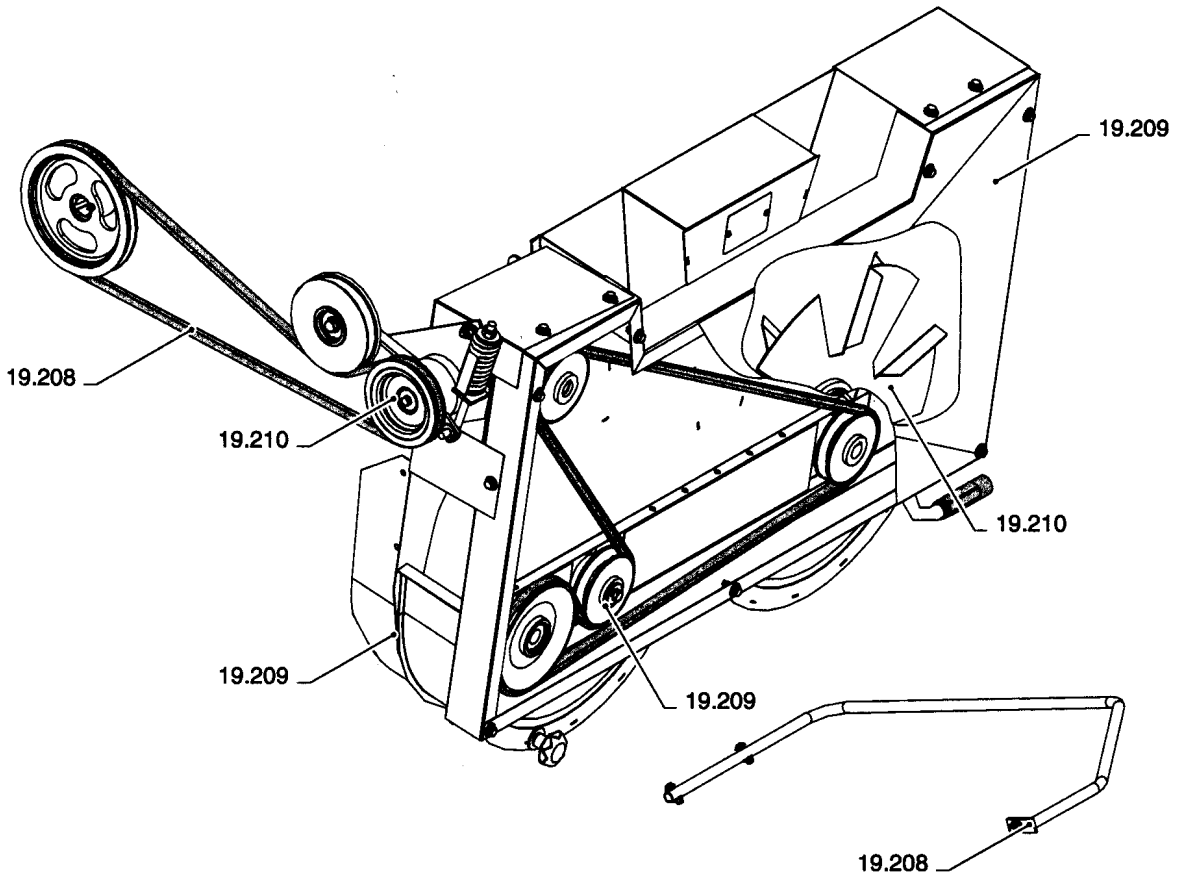

ссылка	Номер детали	Кол-во	Описание

HEADERS	**BEC CUEILLEUR**	**BARRA**	**SKÆREBORDE**
BARRA	**SCHNEIDWERK**	**CABEÇALHO DE CEIFA**	**MAAIBORDEN**

SEC. 20

High-Capacity Grain Header
SEE CATALOGUE 603.27.017.00

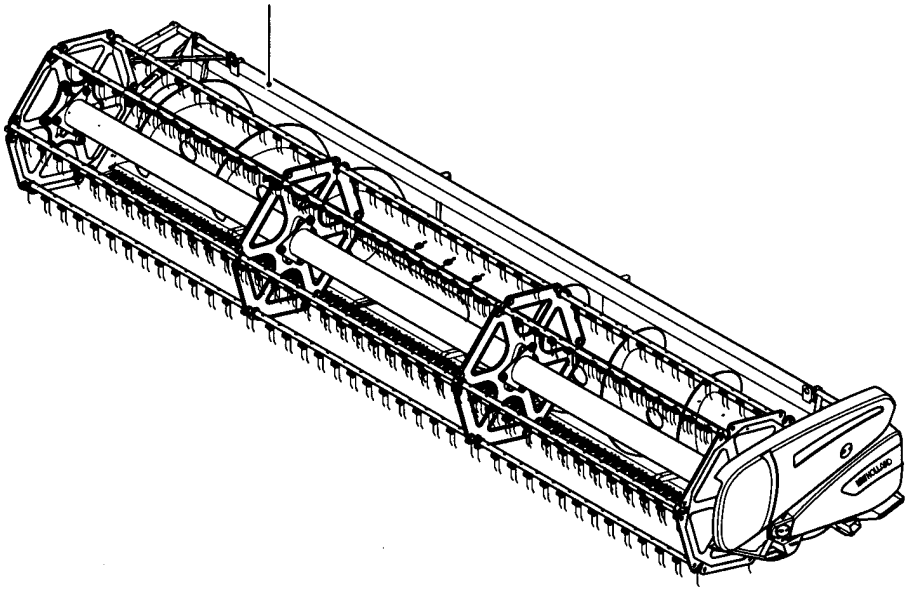

Maize Header
SEE CATALOGUE 603.27.007.00

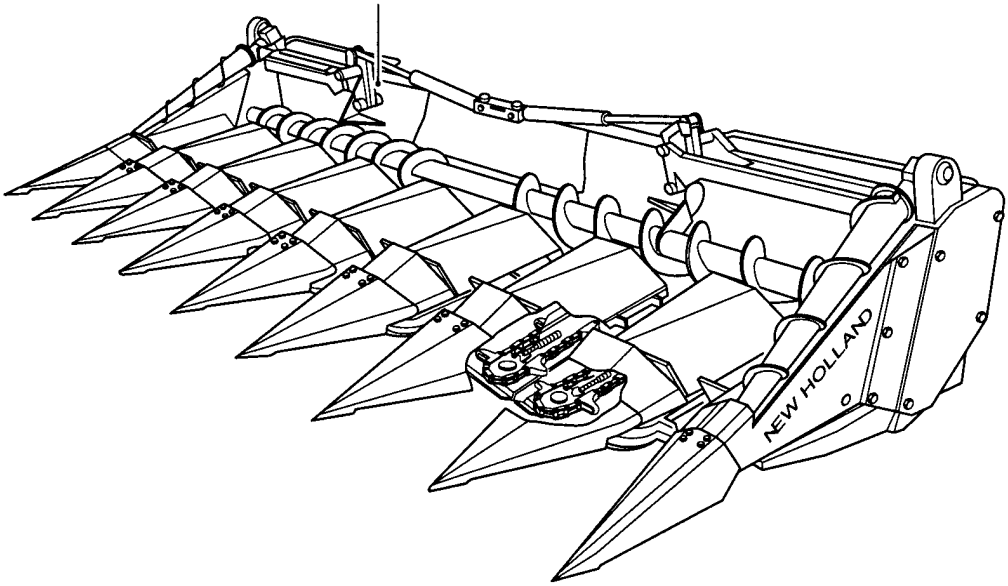

ссылка	Номер детали	Кол-во	Описание

VERSION LIST
ELENCO VERSIONI
LISTE DE VERSION
VERZEICHNIS DER VERSIONEN

LISTA DE VERSIONES
LISTA DAS VERSÕES
TYPELISTE
LIJST VAN VERSIES

Vehicle Modello Modele Modells	Modelo Modelo Model Model	Chassi Telaio Chassis Fahrgestell	Chasis Armação Stativ Raam	Engine Motore Moteur Motor	Motor Motor Motor Motor
CS520		241 ...		675 TA/CD	
CS540		281 ...		675 TA/CB	
CS640		291 ...		675 TA/CF	
CS660		271 ...		675 TA/CA	
CL560		361 ...		675 TA/CF	

CS660 COMBINE BASE UNIT (1/03-) - General

0.0037(01) VERSION LIST

ссылка	Номер детали	Кол-во	Описание

IDENTIFICATION PLATES
TARGHETTE DI IDENTIFICAZIONE
PLAQUES D'IDENTIFICATION
TYPENSCHILDER

PLACAS DE IDENTIFICACIÓN
CHAPAS DE IDENTIFICAÇÃO
IDENTIFIKATIONSPLADER
IDENTIFICATIEPLATEN

VEHICLE IDENTIFICATION
IDENTIFICAZIONE MODELLO
IDENTIFICATION MODELE
KENNZEICHEN MODELLS
IDENTIFICACION MODELO
IDENTIFICAÇÃO DO MODELO
MODELKENDINGSPLADE
MODELIDENTIFICATIE

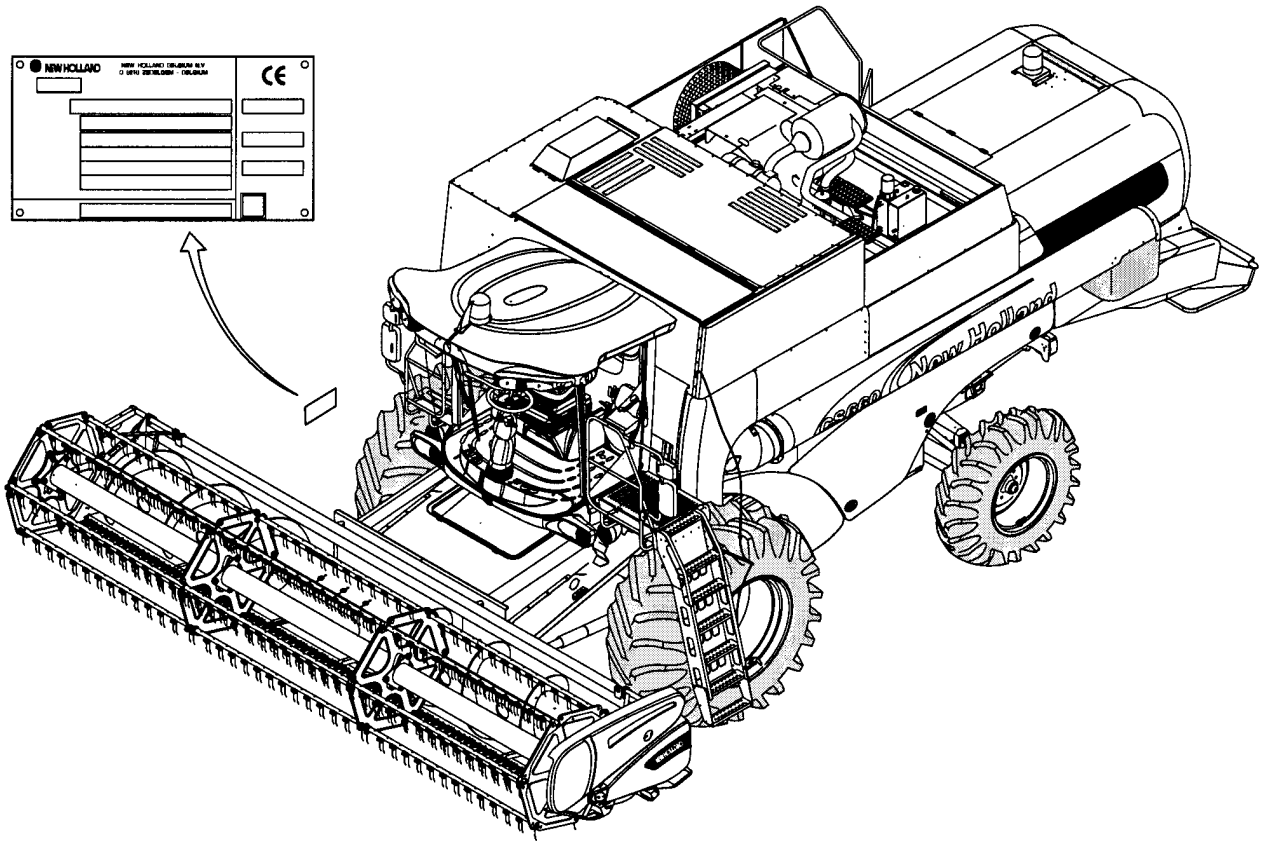

0.0038(01) IDENTIFICATION PLATES

ссылка	Номер детали	Кол-во	Описание

MAINTENANCE PARTS
PARTICOLARI PER LA MANUTENZIONE
PIECES DE MAINTENANCE
TEILE FÜR DIE INSTANDHALTUNG

PIEZAS DE MANTENIMIENTO
PEÇAS DE MANUTENÇÃO
VEDLIGEHOLDELSESDELE
ONDERDELEN VOOR ONDERHOUD

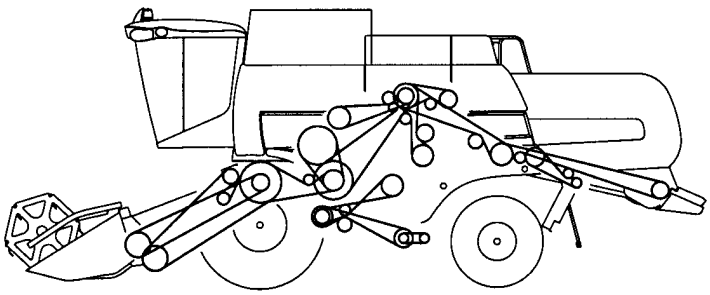

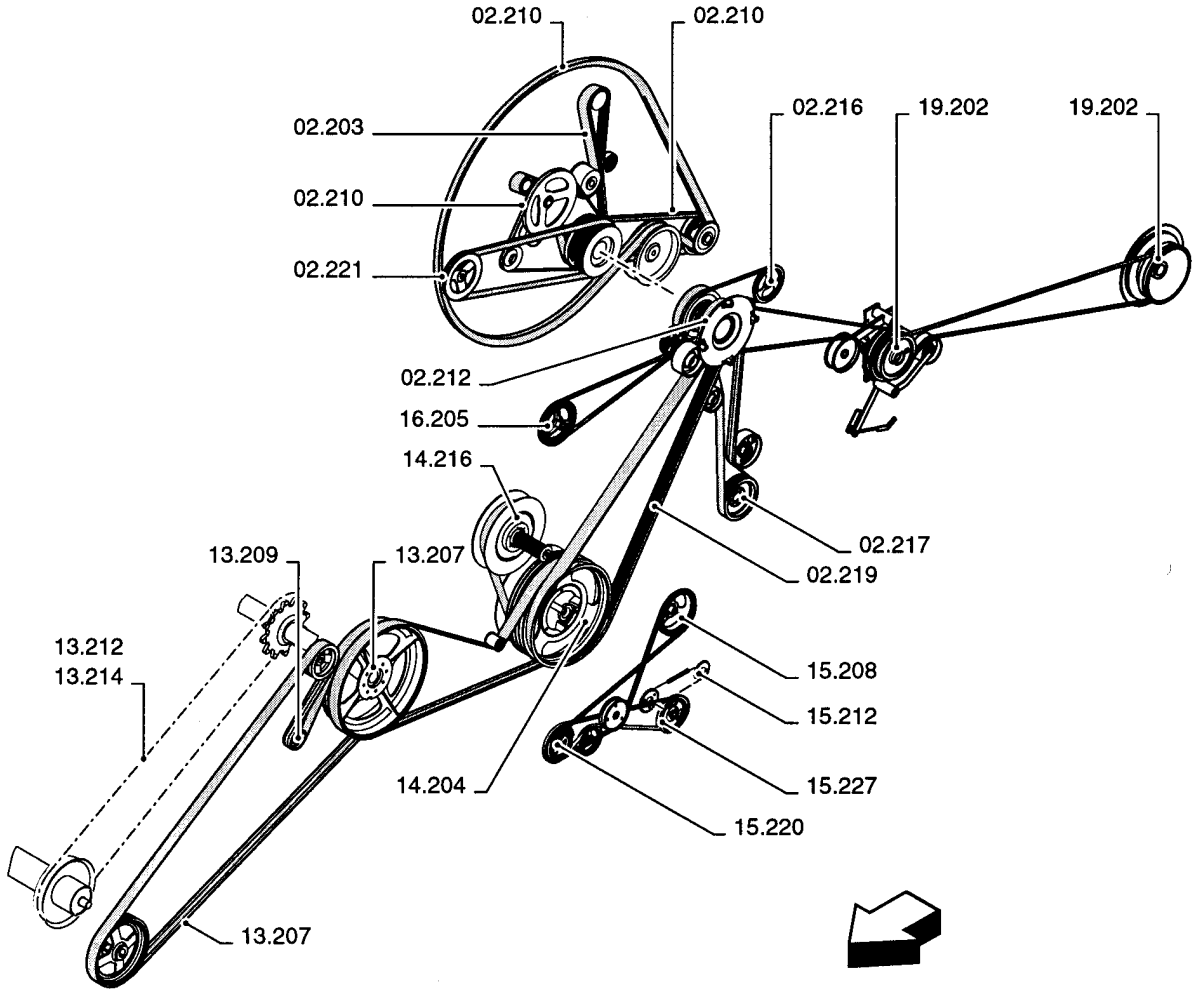

0.0039(01) MAINTENANCE PARTS

ссылка	Номер детали	Кол-во	Описание

MAINTENANCE PARTS
PARTICOLARI PER LA MANUTENZIONE
PIECES DE MAINTENANCE
TEILE FÜR DIE INSTANDHALTUNG

PIEZAS DE MANTENIMIENTO
PEÇAS DE MANUTENÇÃO
VEDLIGEHOLDELSESDELE
ONDERDELEN VOOR ONDERHOUD

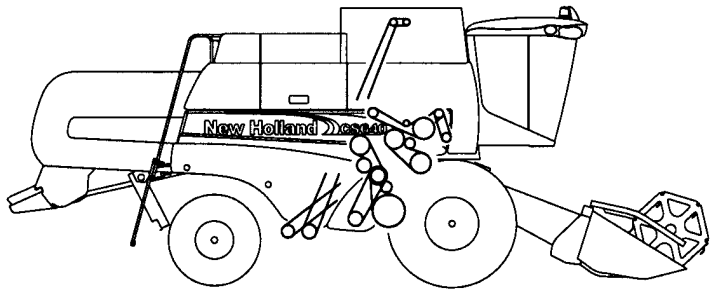

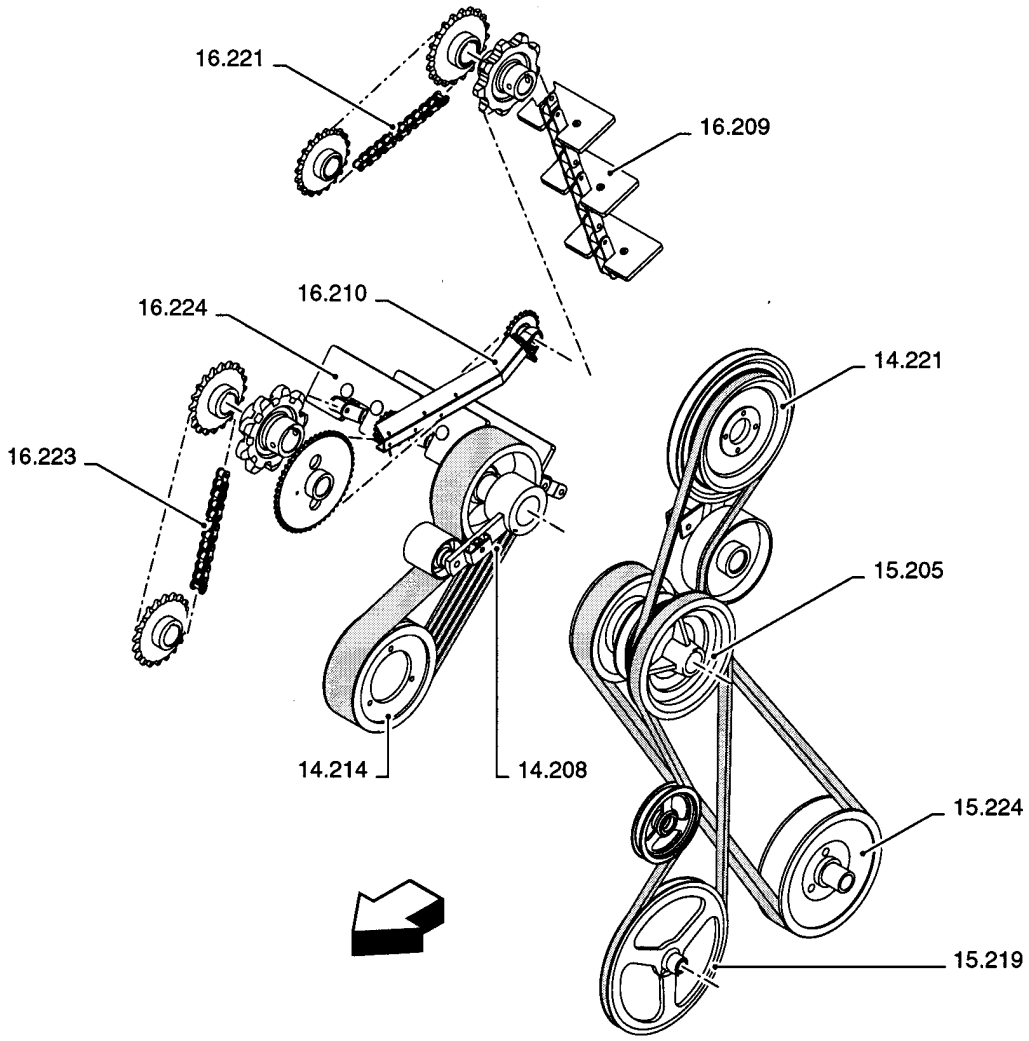

0.0039A(01) MAINTENANCE PARTS

ссылка	Номер детали	Кол-во	Описание

CODE TABLE
TABELLA CODICI
TABLE DES CODES
KODETABELLE

TABLA DE CÓDIGOS
TABELA DE CÓDIGOS
KODESKEMA
CODETABEL

Rules for modification codes

Identify the 3 mid digits (=SERIES) of the serial number of your machine. Eg.: 165**102**032

Modification codes begin with:
C for a part number valid UNTIL series ...,
F for a part number valid FROM series ... UNTIL series ...,
D for a part number valid FROM series ... ONWARDS.

Example:
C092: part number valid until series 092
F093109: part number valid between series 093 and 109
D110: part number valid from series 110 onwards
If your machine has serial number 165**102**032, choose the second part number in our example since 102 is between 093 and 109.

Explicación de los códigos de modificación

Identifique las tres cifras centrales (=SERIE) del número de serie de la máquina. Ej.: 165**102**032

Los códigos de modificación inician con:
C para el número de pieza válido HASTA la serie ...,
F para el número de pieza válido DESDE la serie ... HASTA la serie...,
D para el número de pieza válido A PARTIR DE la serie ...,

Ejemplo:
C092: número de pieza válido hasta la serie 092
F093109: número de pieza válido entre las series 093 y 109
D110: número de pieza válido a partir de la serie 110
Si su máquina presenta el número de serie 165**102**032, escoja el segundo número de pieza de nuestro ejemplo, ya que el 102 se encuentra entre 093 y 109.

Spiegazione dei codici di modifica

Identificate le 3 cifre centrali (=SERIE) del numero di serie della macchina. Es.: 165**102**032

I codici di modifica iniziano con:
C per numero di particolare valido FINO alla serie ...,
F per numero di particolare valido DALLA serie ... FINO alla serie ...,
D per numero di particolare valido DALLA serie ... IN AVANTI.

Esempio:
C092: numero di particolare valido fino alla serie 092
F093109: numero di particolare valido tra le serie 093 e 109
D110: numero di particolare valido dalla serie 110 in avanti
Se la vostra macchina ha il numero di serie 165**102**032, scegliete il secondo numero di particolare nel nostro esempio, dato che 102 si trova tra 093 e 109.

Explicação para os códigos de modificação

Identifique os 3 dígitos centrais (=SÉRIE) do número de série da sua máquina. Ex.: 165**102**032

Os códigos de modificação começam com:
C para número de peça válido ATÉ à série ...,
F para número de peça válido DA série ... ATÉ à série ...,
D para número de peça válido DA série ... EM DIANTE.

Exemplo:
C092: número de peça válido até à série 092
F093109: número de peça válido entre as séries 093 e 109
D110: número de peça válido da série 110 em diante
Se o número de série da sua máquina for 165**102**032, seleccione o segundo número de peça no nosso exemplo, visto que 102 está entre 093 e 109.

Explication des codes de modification

Identifiez les 3 chiffres au centre (=SERIE) du numéro de série de la machine. Ex. : 165**102**032

Les codes de modification commencent par :
C pour un numéro de pièce valable JUSQU'A la série...,
F pour un numéro de pièce valable DE la série ... JUSQU'A la série...,
D pour un numéro de pièce valable A PARTIR de la série..

Exemple :
C092 : numéro de pièce valable jusqu'à la série 092
F093109 : numéro de pièce valable entre les séries 093 et 109
D110 : numéro de pièce valable à partir de la série 110
Si votre machine a le numéro de série 165**102**032, choisissez le second numéro de pièce comme sur notre exemple, vu que 102 se situe entre 093 et 109.

Retningslinier for ændringskoder

Find frem til de 3 midterste cifre (=SERIEN) i maskinens serienummer (eksempelvis 165**102**032).

Ændringskoderne begynder med:
C for art. nr. gældende TIL serie ...
F for art. nr. gældende FRA serie ... TIL serie ...
D for art. nr. gældende FRA serie ... FF.

Eksempel:
C092: art. nr. gældende til serie 092
F093109: art. nr. gældende fra serie 093 til serie 109
D110: art. nr. gældende fra serie 110 ff.
Vælg det andet art. nr. i vores eksempel, hvis maskinen har serienummer 165**102**032, idet tallet 102 er mellem 093 og 109.

Erläuterungen zu den Änderungscodes

Ermittlung der 3 zentralen Stellen (=SERIENNUMMER) der Baureihennummer der Maschine. Bsp.: 165**102**032

Die Änderungscodes beginnen mit:
C für die Teilnummer, dessen Gültigkeit BIS zur Serie ... besteht,
F für die Teilnummer, dessen Gültigkeit AB der Serie ... BIS zur Serie ... besteht,
D für die Teilnummer, dessen Gültigkeit AB der Serie ... und für die DARAUF FOLGENDEN Serien besteht,

Beispiel:
C092: bis zur Serie 092 gültige Teilenummer
F093109: zwischen den Serien 093 und 109 gültige Teilenummer
D110: für die Serie 110 und die darauf folgenden Serien gültige Teilenummer
Ist Ihre Maschine mit der Baureihennummer 165**102**032 versehen, so wählen Sie die zweite Teilenummer aus unserem Beispiel, da 102 zwischen 093 und 109 liegt.

Uitleg van de aanpassingscodes

Stel de 3 middelste cijfers (=SERIE) van het serienummer van de machine vast. Bijv.: 165**102**032

De aanpassingscodes beginnen met:
C onderdeelnummer dat geldt TOT de serie ...,
F onderdeelnummer dat geldt VANAF de serie ... TOT de serie ...,
D onderdeelnummer dat geldt VANAF de serie ... .

Voorbeeld:
C092: onderdeelnummer dat geldt tot de serie 092
F093109: onderdeelnummer dat geldt voor de series tussen 093 en 109
D110: onderdeelnummer dat geldt vanaf de serie 110
Heeft uw machine serienummer 165**102**032, kies dan het tweede onderdeelnummer uit ons voorbeeld, aangezien 102 zich tussen 093 en 109 bevindt.

0.0041(01) CODE TABLE

ссылка	Номер детали	Кол-во	Описание

ENGINE	**MOTEUR**	**MOTOR**	**MOTOR**
MOTORE	**MOTOR**	**MOTOR**	**MOTOR**

SEC. 1

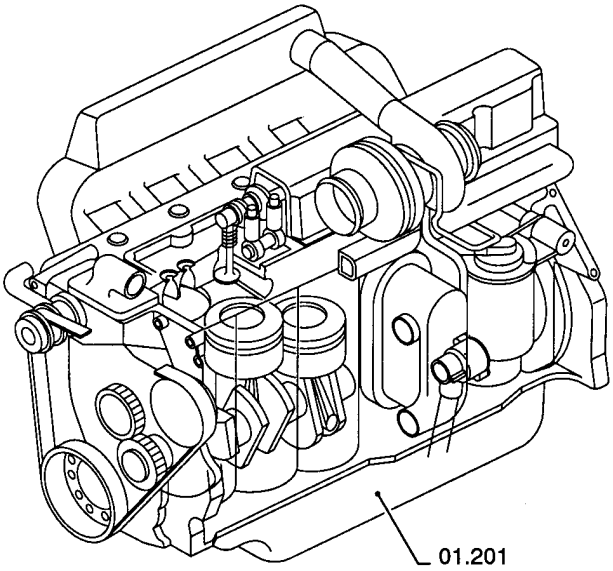

01.000(01) SECTION LIST 1

ссылка	Номер детали	Кол-во	Описание

01.201(01) COMPLETE ENGINE

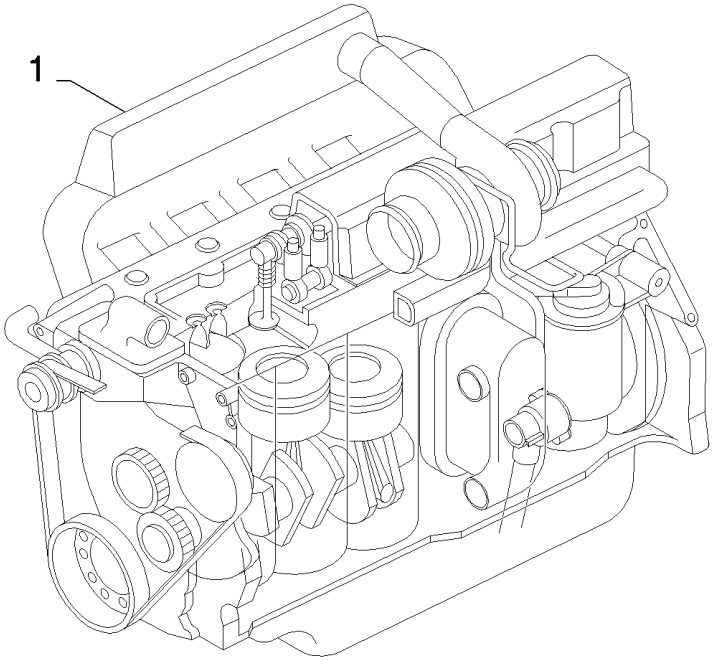

01.201(01) COMPLETE ENGINE

ссылка	Номер детали	Кол-во	Описание
1	87801857	1	ENGINE, CS540, SEE ENGINE MODEL 675 TA/CB
1	87802071	1	ENGINE, CS640/CL560, SEE ENGINE MODEL 675 TA/CF
1	87802219	1	ENGINE, CS520, SEE ENGINE MODEL 675 TA/CD
1	87801859	1	ENGINE, CS660, SEE ENGINE MODEL 675 TA/CA

ENGINE EQUIPMENT	**EQUIPEMENT MOTEUR**	**EQUIPO MOTOR**	**MOTORUDSTYR**
EQUIPAGGIAMENTO MOTORE	**MOTORAUSRÜSTUNG**	**EQUIPAMENTO DO MOTOR**	**MOTORUITRUSTING**

SEC. 2

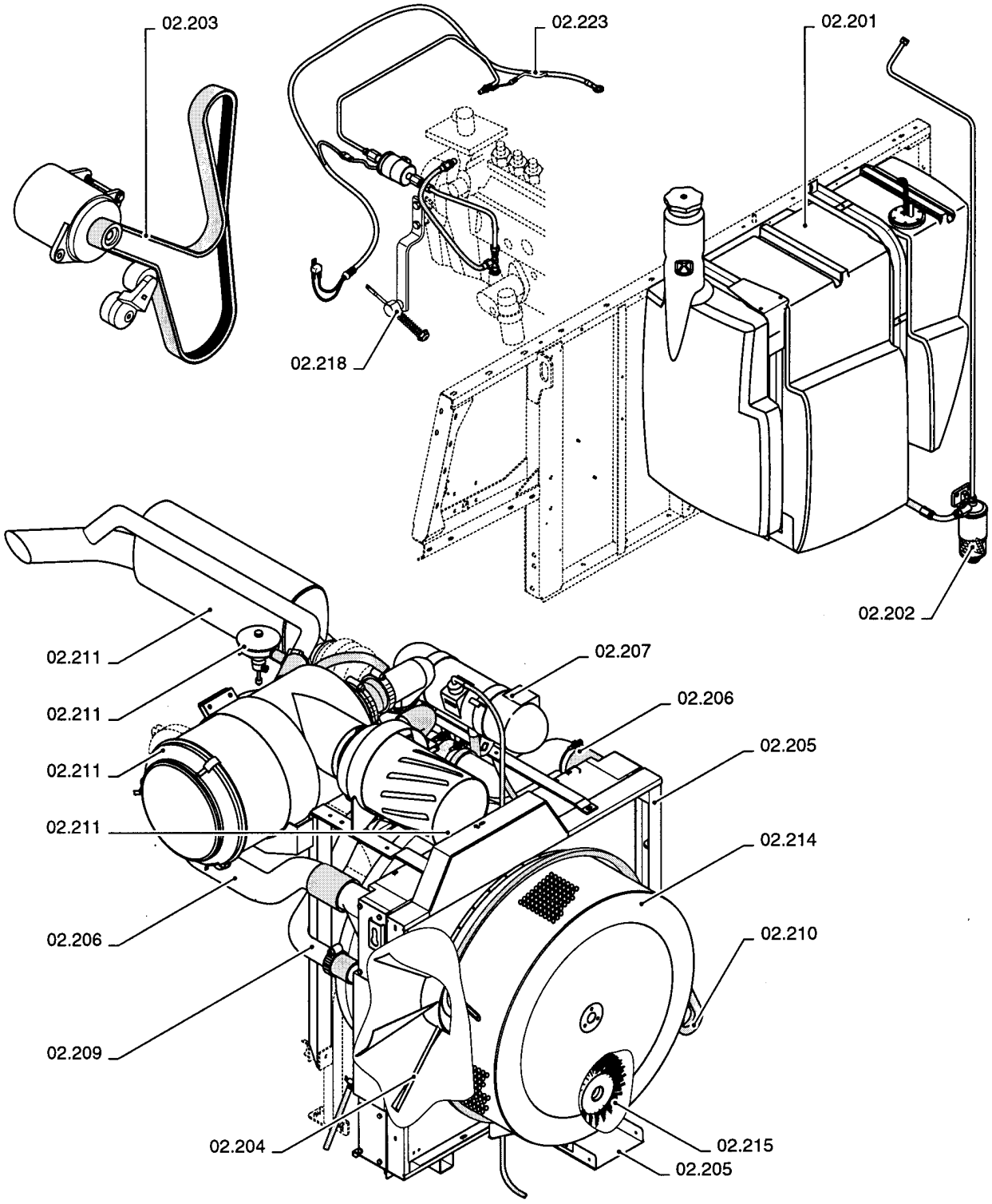

02.000(01) SECTION LIST 2

ссылка	Номер детали	Кол-во	Описание

ENGINE EQUIPMENT	**EQUIPEMENT MOTEUR**	**EQUIPO MOTOR**	**MOTORUDSTYR**
EQUIPAGGIAMENTO MOTORE	**MOTORAUSRÜSTUNG**	**EQUIPAMENTO DO MOTOR**	**MOTORUITRUSTING**

SEC. 2

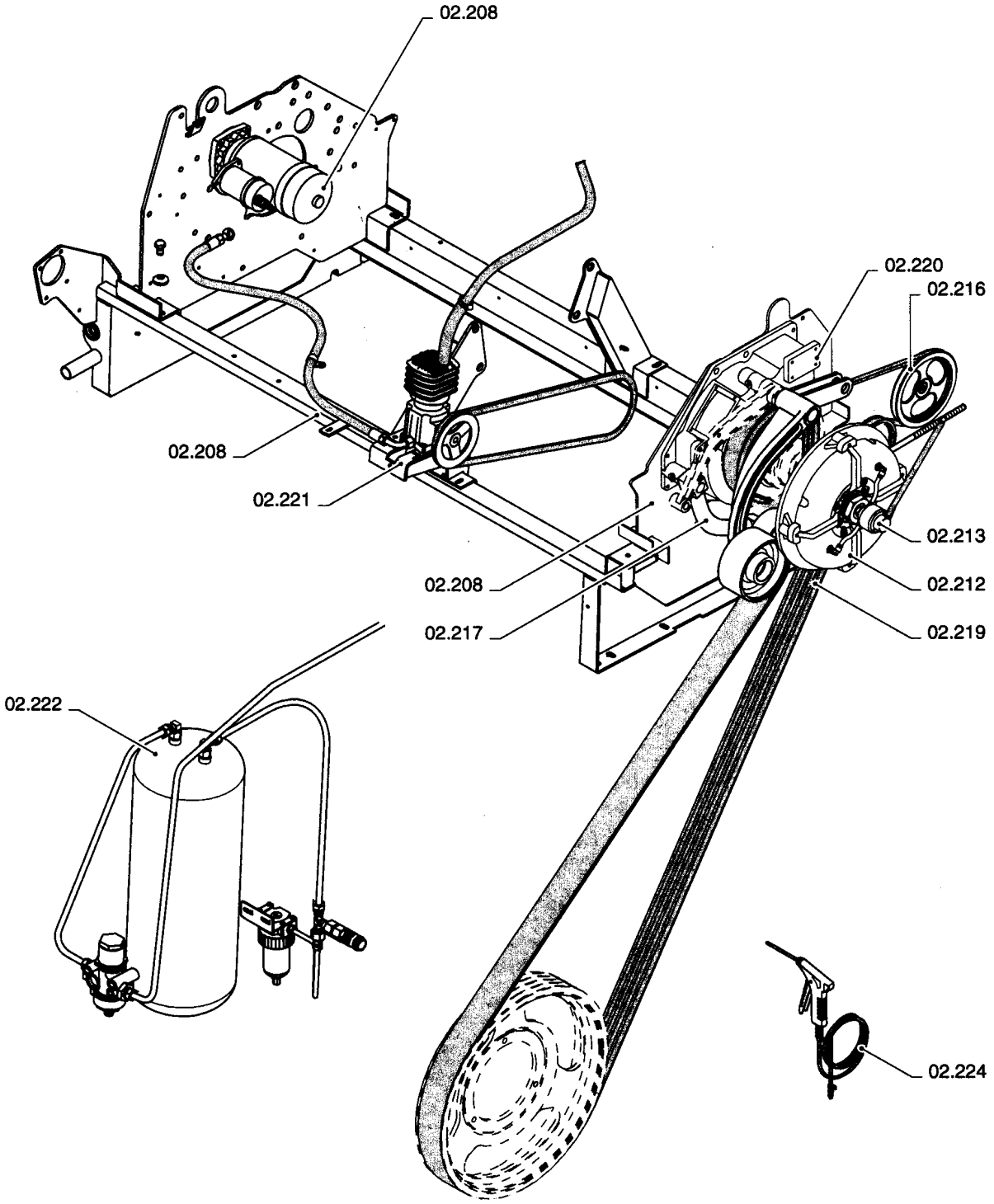

02.000(02) SECTION LIST 2

ссылка	Номер детали	Кол-во	Описание

02.201(01) FUEL TANK, SUPPORTS

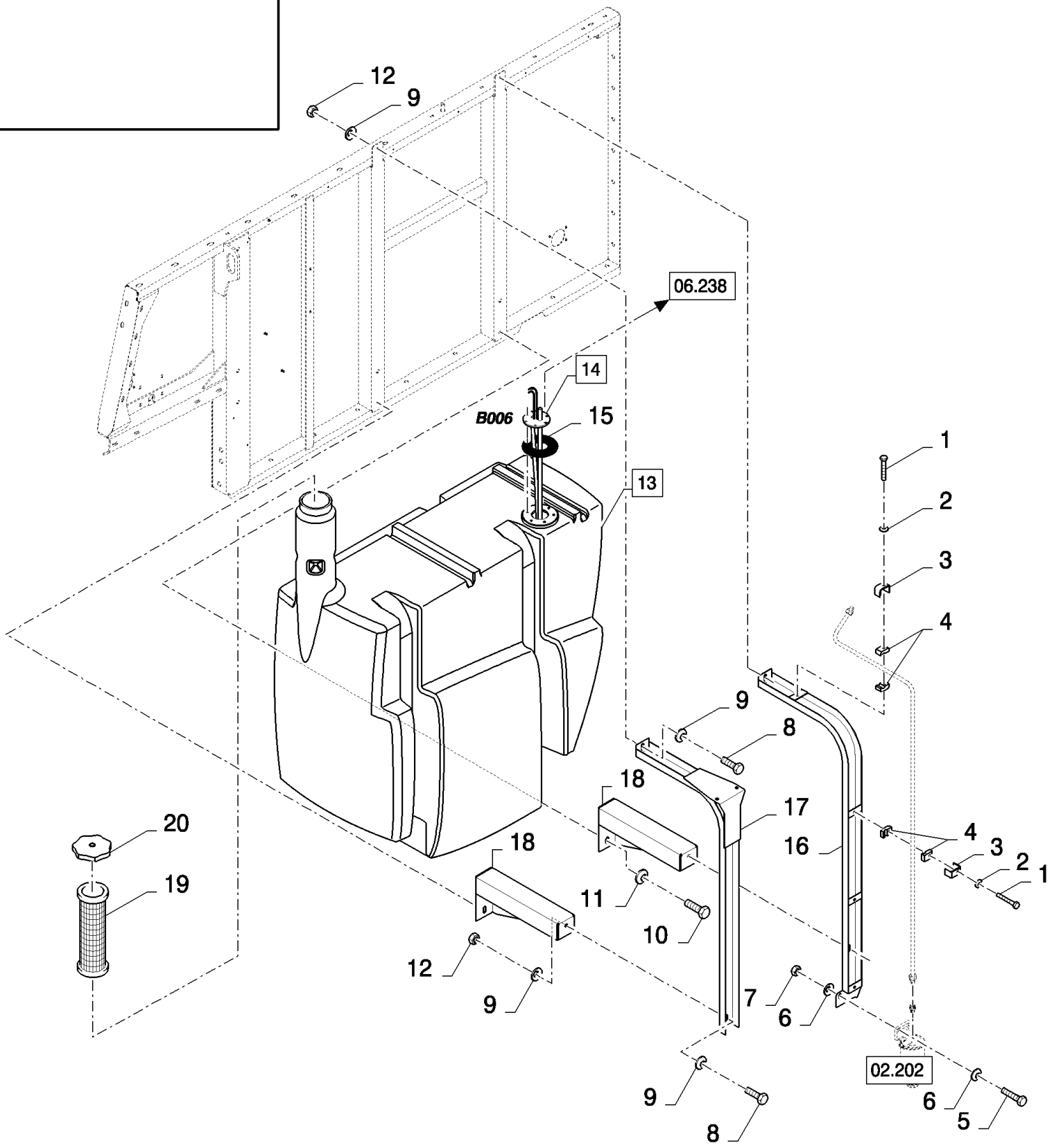

02.201(01) FUEL TANK, SUPPORTS

ссылка	Номер детали	Кол-во	Описание
1	120056	2	BOLT, Hex, M6 x 50, 8.8,
2	412649	2	WASHER, SPRING, Belleville, M6,
3	442340	2	SUPPORT, {PP:80442340}
4	433008	4	CLAMP, {PP:80433008}
5	43128	2	BOLT, Hex, M8 x 30, 8.8,
6	322358	4	WASHER, SPRING, Belleville, M8,
7	89706690	2	NUT, M8, Cl 8,
8	43140	4	BOLT, Hex, M10 x 30, 8.8, Full Thd,
9	140045	8	WASHER, SPRING, Belleville, M10,
10	9706687	4	BOLT, Hex, M12 x 30, 8.8,
11	140046	4	WASHER, SPRING, Belleville, M12,
12	100016	4	NUT, M10, Cl 8,
13	84432565	1	FUEL TANK, 450L (19,20), FOR CL560 ONLY, FOR CS520, CS540, CS640 ONLY
13	84814091	1	FUEL TANK, 600L (19,20), FOR CS660 ONLY
14	84073619	1	INDICATOR, (15), SEE FIGURE 06.701
15	9832364	1	GASKET, {PP:89832364}
16	84433738	1	SUPPORT,
17	84433740	1	SUPPORT,
18	84433709	2	SUPPORT, , BSN C479
18	87332051	2	SUPPORT, , ASN D480
19	9502050	1	FILTER, STRAINER, , FOR CL560 ONLY, FOR CS520, CS540, CS640 ONLY, BSN C391
19	9501200	1	FILTER, STRAINER, , FOR CS520, CS540, CS640 ONLY, FOR CL560 ONLY, ASN D392
19	9501200	1	FILTER, STRAINER,
20	84041999	1	CAP,

02.202(01) FUEL TANK, PIPE LINES

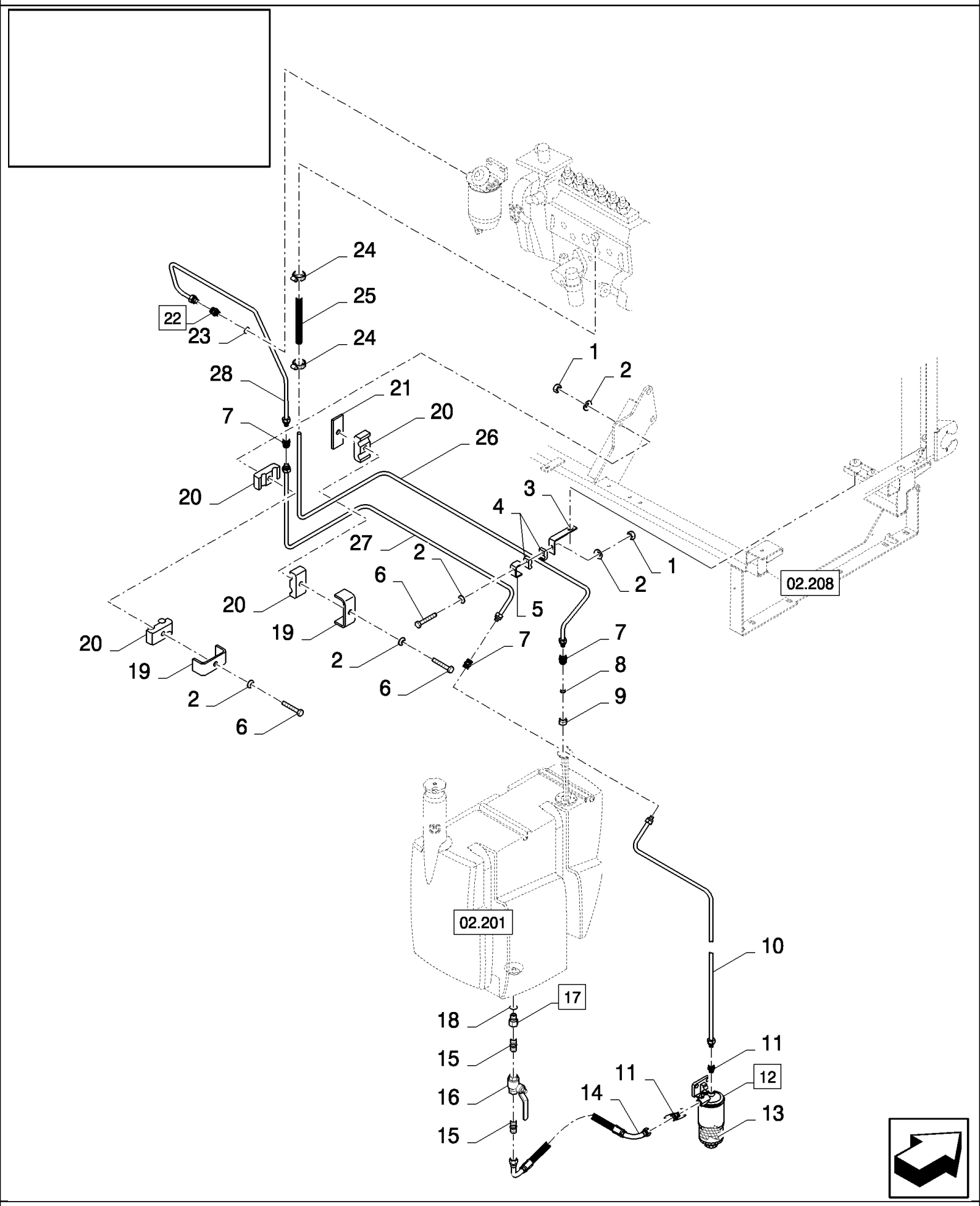

02.202(01) FUEL TANK, PIPE LINES

ссылка	Номер детали	Кол-во	Описание
1	353308	3	NUT, LOCK, M6 x 1, Cl 8,
2	412649	6	WASHER, SPRING, Belleville, M6,
3	84435203	1	BRACKET, , BSN C391
4	433008	2	CLAMP, {PP:80433008} , BSN C391
5	442340	1	SUPPORT, {PP:80442340} , BSN C391
6	120056	3	BOLT, Hex, M6 x 50, 8.8,
7	150018	3	CONNECTOR, HYD., {PP:80150018}
8	150015	1	FERRULE, {PP:80150015} 12MM
9	86548976	1	NUT, 12MM
10	84434952	1	TUBE, , BSN C375
10	84453529	1	TUBE, , ASN D376
11	84431916	2	FITTING,
12	9512385	1	FILTER, FUEL, {PP:89512385} (13)
13	89512387	1	FILTER, FUEL, Single pkg qty. For multi pkg [qty.2] order 89512387MP,
14	84069559	1	HOSE, FLEXIBLE,
15	84069089	2	CONNECTOR, HYD.,
16	84011517	1	DRAINCOCK/TAP, SUPPLY,
17	84989397	1	CONNECTOR, HYD., (18)
18	86598101	1	O-RING, Cl 6, 15.3MM ID x 2.2 Thk,
19	431941	2	SUPPORT, {PP:80431941}
20	430357	4	CLAMP, {PP:80430357}
21	434097	1	BRACKET, {PP:80434097}
22	84069547	1	CONNECTOR, HYD., (23)
23	129270	1	O-RING, 5-1, 90 Duro, .414" ID x .072" Thk,
24	82039341	2	CLAMP, HOSE,
25	84000314	1	HOSE, L=0.17M
26	84435062	1	TUBE, , FOR CL560 ONLY, FOR CS520, CS540 ONLY
26	84437632	1	TUBE, , FOR CS640, CS660 ONLY
27	84435000	1	TUBE, , FOR CS520, CS540 ONLY, FOR CL560 ONLY
27	84437618	1	TUBE, , FOR CS640, CS660 ONLY
28	84435026	1	TUBE,

02.203(01) DRIVE : ALTERNATOR, WATERPUMP AND AIR COMPRESSOR

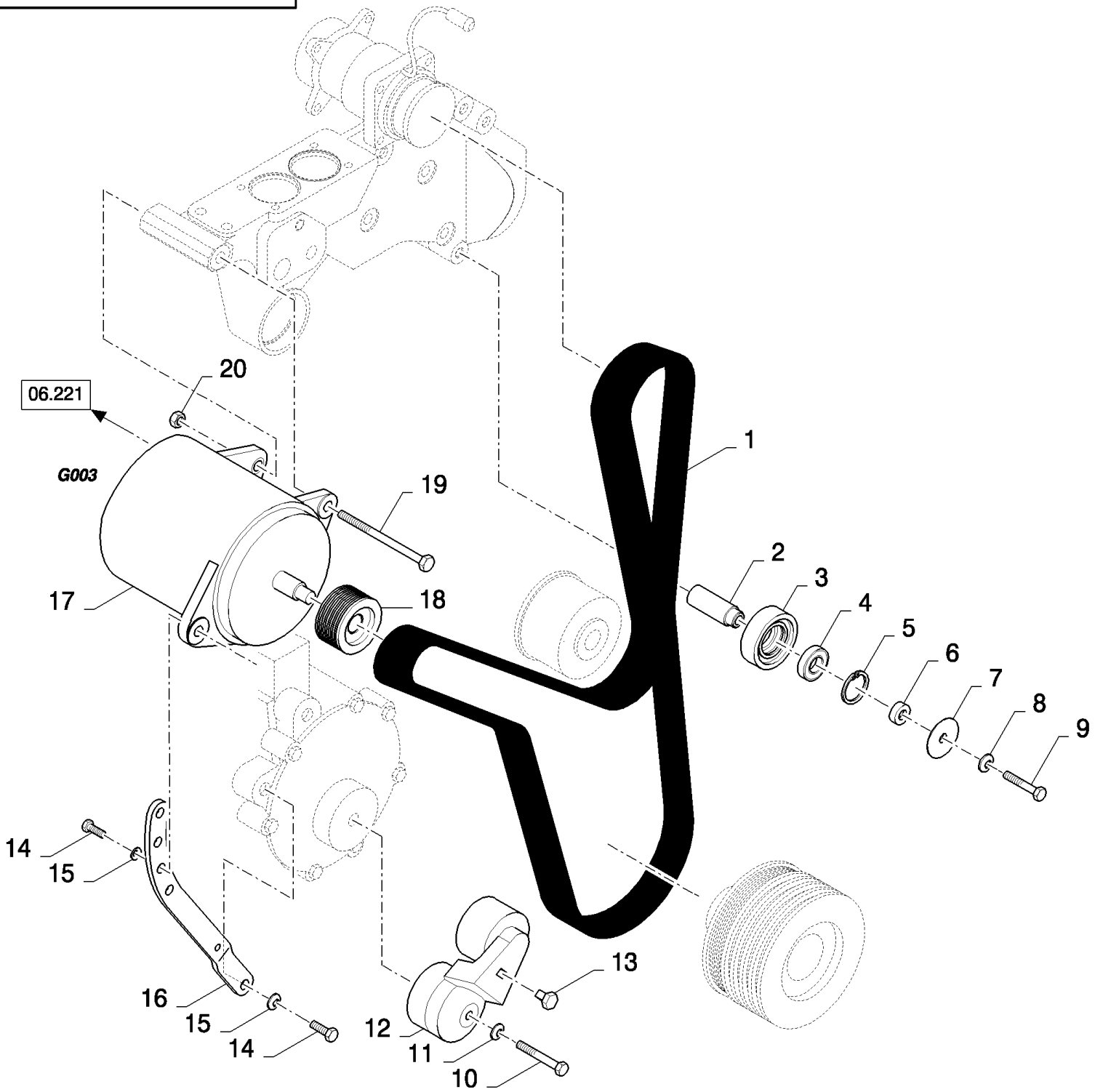

02.203(01) DRIVE : ALTERNATOR, WATERPUMP AND AIR COMPRESSOR

ссылка	Номер детали	Кол-во	Описание
1	84817638	1	BELT, TRANSMISSION,
2	84071557	1	BUSHING,
3	84071551	1	WHEEL, IDLER,
4	86629499	1	BEARING ASSY,
5	300645	1	RING, SNAP, {PP:80300645} M42, Int, 42MM
6	140084	1	WASHER, {PP:80140084}
7	84071561	1	COVER,
8	81547	1	WASHER, LOCK, 7/16",
9	86505982	1	BOLT, Hex, 7/16"-14 x 3 3/4", G5,
10	280260	1	BOLT, {PP:80280260} Hex, 3/8"-16 x 3", G8,
11	140045	1	WASHER, SPRING, Belleville, M10,
12	86013886	1	TENSIONER, BELT,
13	84433345	1	TOOL, GENERAL,
14	87670	2	BOLT, {PP:80087670} Hex, 1/2"-13 x 1 1/4", G5, Full Thd,
15	80679	2	WASHER, LOCK, 1/2",
16	84432576	1	SUPPORT,
17	9833744	1	ALTERNATOR, {PP:89833744}
18	9828373	1	PULLEY, {PP:89828373}
19	86000020	1	BOLT, Hex, 1/2"-13 x 6", G5,
20	9636698	1	NUT, LOCK, {PP:89636698} 1/2"-13, GB,

02.204(01) ROTARY SCREEN : SHAFTS

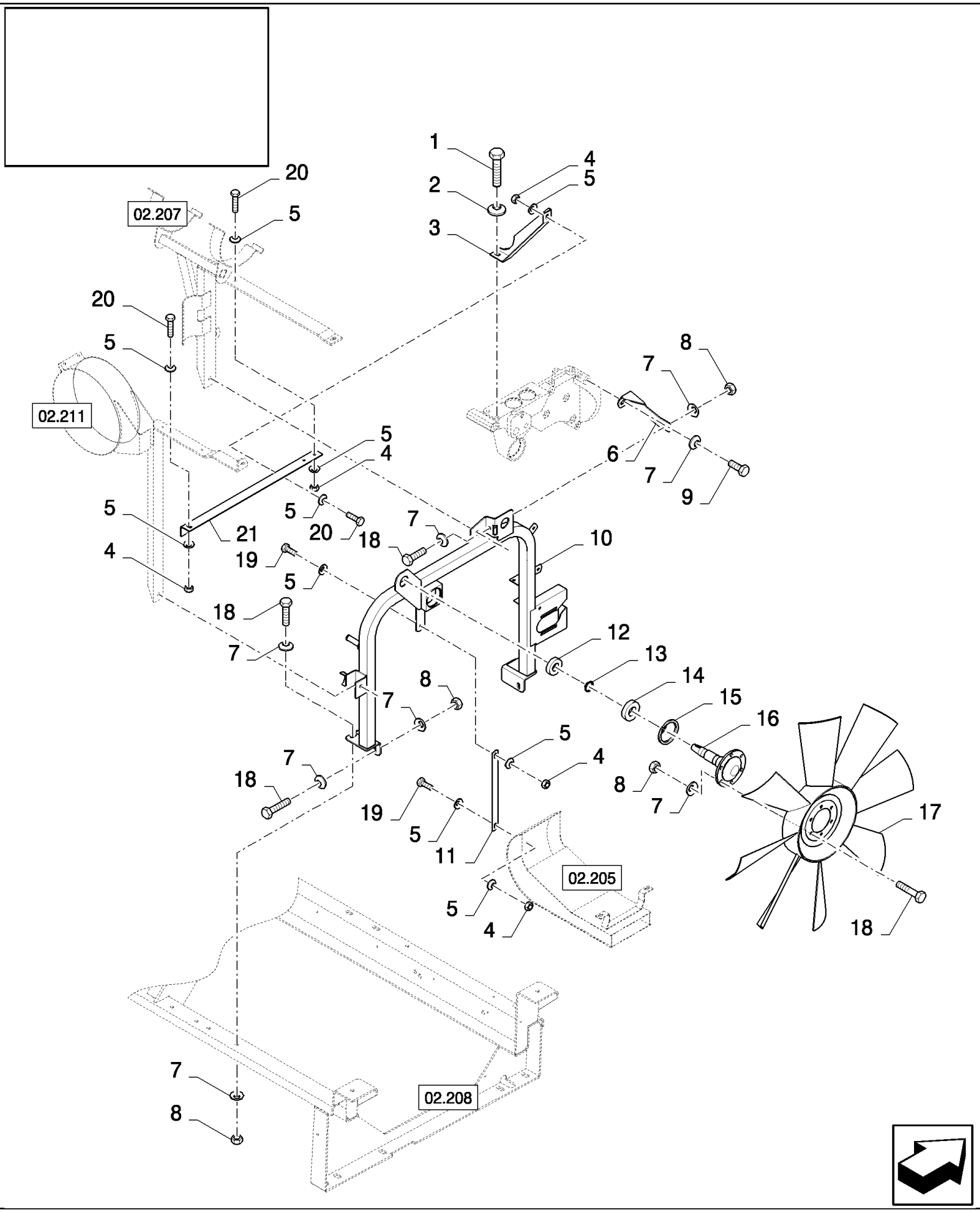

02.204(01) ROTARY SCREEN : SHAFTS

ссылка	Номер детали	Кол-во	Описание
1	50087	1	BOLT, {PP:80050087} Hex, 7/16"-14 x 7/8", G5, Full Thd,
2	140046	1	WASHER, SPRING, Belleville, M12,
3	84076875	1	SUPPORT,
4	89706690	5	NUT, M8, Cl 8,
5	322358	10	WASHER, SPRING, Belleville, M8,
6	84069927	1	SUPPORT,
7	140045	18	WASHER, SPRING, Belleville, M10,
8	100016	12	NUT, M10, Cl 8,
9	360296	1	BOLT, {PP:80360296} Hex, M10 x 100, 8.8, Full Thd,
10	84076488	1	SUPPORT,
11	84077442	1	SUPPORT,
12	210043	1	BEARING ASSY, {PP:80210043}
13	11068376	1	RING, SNAP, M35, Ext,
14	84438926	1	BEARING, BALL,
15	370018	1	RING, SNAP, {PP:80370018}
16	84072415	1	SHAFT,
17	84014798	1	FAN,
18	43139	11	SCREW, {PP:80043139} M10x25
19	120104	2	BOLT, Hex, M8 x 20, 8.8,
20	43127	3	BOLT, Hex, M8 x 25, 8.8,
21	84437025	1	SUPPORT,

02.205(01) ROTARY SCREEN : FRAME AND FAN

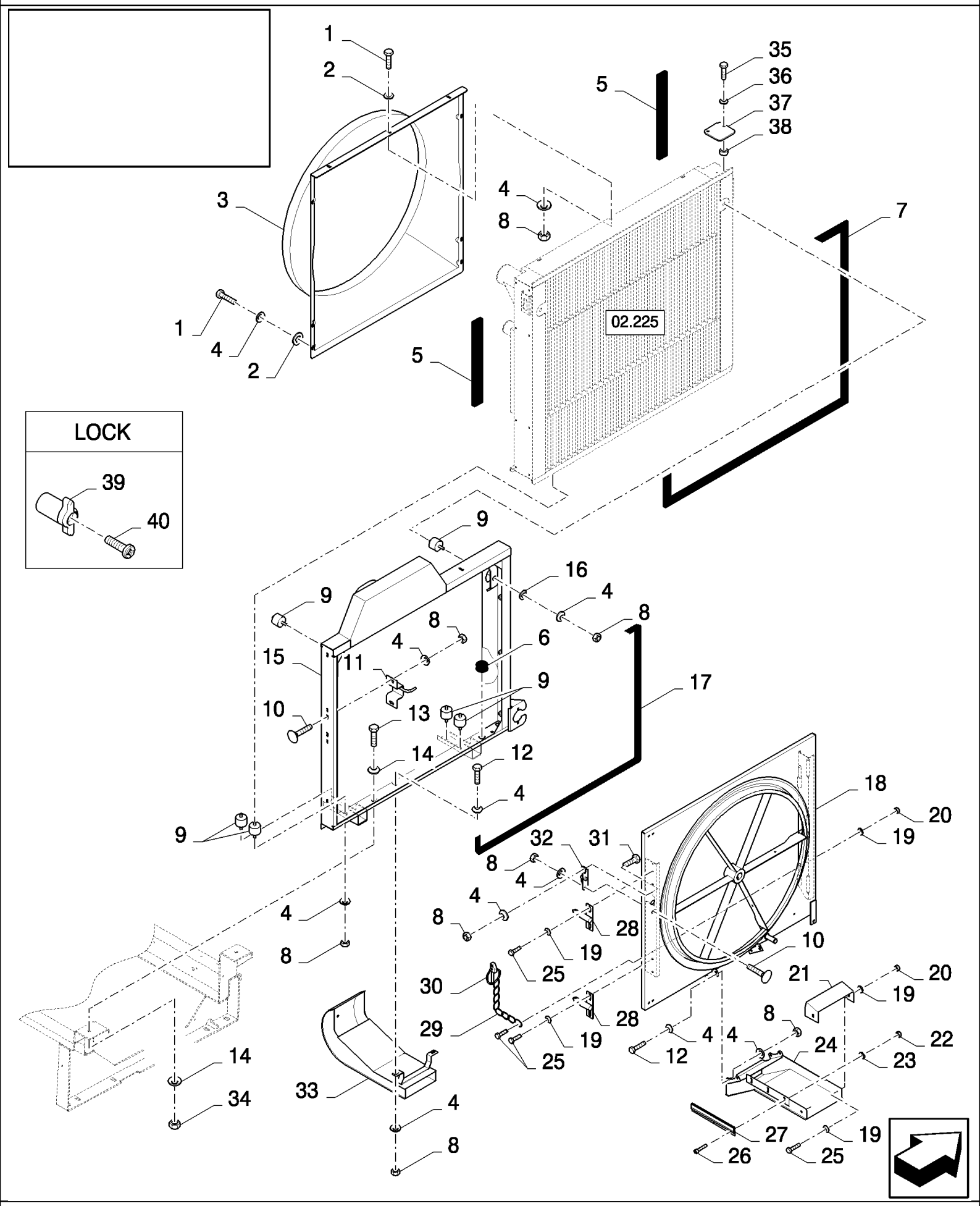

02.205(01) ROTARY SCREEN : FRAME AND FAN

ссылка	Номер детали	Кол-во	Описание
1	43127	11	BOLT, Hex, M8 x 25, 8.8,
2	140041	9	WASHER, M8 x 28 x 3,
3	84069708	1	HOUSING, FAN,
4	322358	34	WASHER, SPRING, Belleville, M8,
5	80400987	AR	SEAL, L=1M, BSN C375
6	336456	1	PLUG,
7	NS	AR	NOT SERVICED, L=4.2M
8	89706690	18	NUT, M8, Cl 8,
9	84057804	6	DAMPER, , BSN C375
10	86507486	3	BOLT, CARRIAGE, Short NK, M8 x 20, Cl8.8, Full Thd,
11	84057181	1	SUPPORT,
12	120104	8	BOLT, Hex, M8 x 20, 8.8,
13	43139	2	SCREW, M10x25
14	140045	4	WASHER, SPRING, Belleville, M10,
15	84075584	1	SUPPORT, , BSN C375
16	140075	2	WASHER, , BSN C375
17	401209	AR	SEAL PROTECTION, L=4M, BSN C375
18	84075093	1	DOOR,
19	412649	AR	WASHER, SPRING, Belleville, M6,
20	15896221	AR	NUT, M6, Cl 10,
21	84438645	1	COVER, , FOR CS640, CS660 ONLY
22	100012	3	NUT, M4, Cl 8,
23	322355	3	WASHER, SPRING, Belleville, M4,
24	84077475	1	DUCT, AIR, , FOR CS520, CS540 ONLY
24	84431170	1	DUCT, AIR, , FOR CS640, CS660 ONLY
25	86508568	AR	BOLT, Hex, M6 x 16, 8.8,
26	86585706	3	SCREW, Cross Pan Hd, M4 x 10,
27	84073019	1	BRUSH,
28	84437766	2	PIN,
29	539289	2	CHAIN,
30	9832679	2	PIN, SPLIT (COTTER),
31	16043224	1	BOLT, Hex, M8 x 16, 8.8, Full Thd,
32	84431232	1	LOCK,
33	84076084	1	DUCT, AIR,
34	100016	2	NUT, M10, Cl 8,
35	43128	2	BOLT, Hex, M8 x 30, 8.8,
36	322358	3	WASHER, SPRING, Belleville, M8,
37	84454091	1	PLATE,
38	9812123	2	BUSHING,
39	87031838	1	KNOB,
40	86511831	1	SCREW, Cross Pan Hd, M6 x 25, M6x25

02.206(01) AIR CIRCUIT

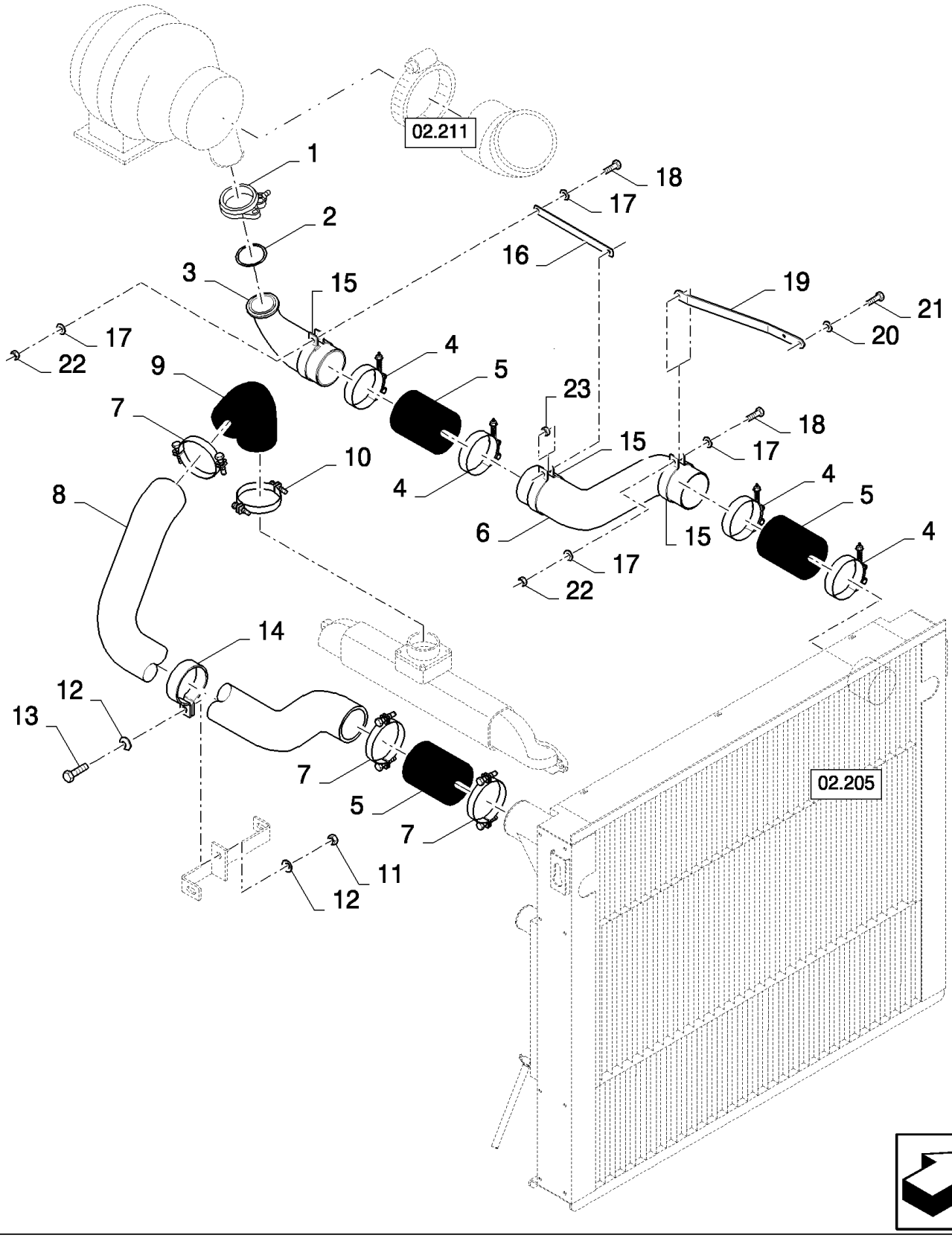

02.206(01) AIR CIRCUIT

ссылка	Номер детали	Кол-во	Описание
1	4800661	1	CLAMP, HOSE, , BSN C321
1	84448034	1	STRAP, , ASN D322
2	17284681	1	GASKET, , BSN C321
2	84448024	1	O-RING, , ASN D322
3	61318365	1	ELBOW,
4	84075957	4	CLAMP, , BSN C375
4	84057504	4	CLAMP, , ASN D376
5	84015286	3	TUBE,
6	84073854	1	TUBE,
7	84021019	3	CLAMP,
8	84073850	1	TUBE,
9	84440786	1	HOSE,
10	84015283	1	CLAMP,
11	89706690	1	NUT, M8, Cl 8,
12	322358	2	WASHER, SPRING, Belleville, M8,
13	43128	1	BOLT, Hex, M8 x 30, 8.8,
14	84038691	1	CLAMP,
15	84455404	3	CLAMP,
16	84454895	1	BRACKET,
17	378243	6	WASHER, M8,
18	87015731	3	BOLT, Hex, M8 x 50, 8.8, Full Thd,
19	84455353	1	BRACKET,
20	412649	1	WASHER, SPRING, Belleville, M6,
21	86977786	1	BOLT, Hex, M6 x 25, 8.8,
22	86629542	3	NUT, LOCK, M8 x 1.25, Cl 8,
23	89812123	1	BUSHING,

02.207(01) WATER CIRCUIT, SHUNT TANK

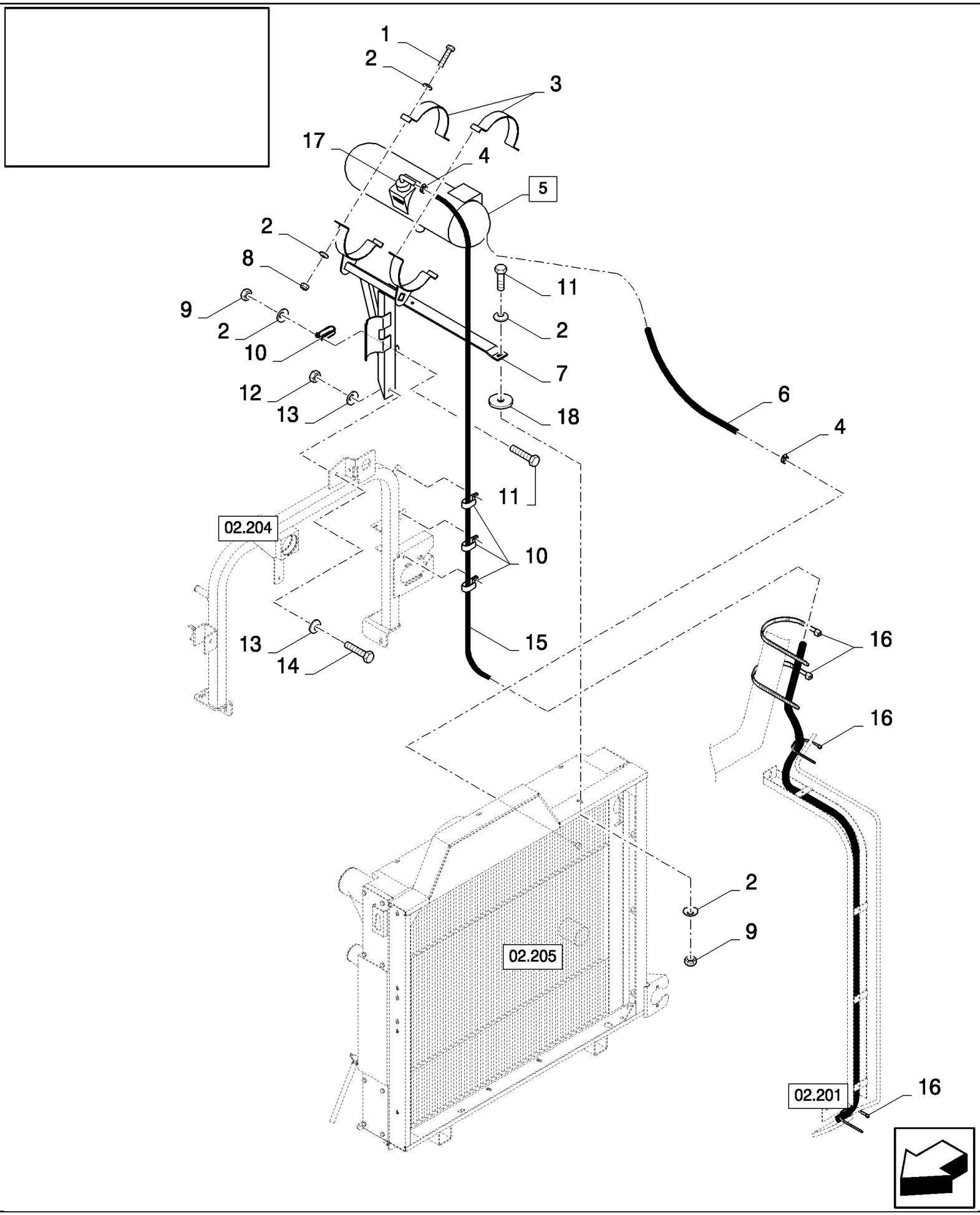

02.207(01) WATER CIRCUIT, SHUNT TANK

ссылка	Номер детали	Кол-во	Описание
1	43129	4	BOLT, Hex, M8 x 40, 8.8,
2	322358	14	WASHER, SPRING, Belleville, M8,
3	84076174	2	CLAMP,
4	913888	3	CLAMP, HOSE, {PP:80913888}
5	84442802	1	TANK, (17)
6	NS	1	NOT SERVICED, L=0.6M
7	84076284	1	SUPPORT, , BSN C375
7	84452376	1	SUPPORT, , ASN D376
8	86629542	4	NUT, LOCK, M8 x 1.25, Cl 8,
9	89706690	5	NUT, M8, Cl 8,
10	417412	4	CLAMP, , BSN C427
10	417412	1	CLAMP, , ASN D428
10	89513271	3	CLAMP, , ASN D428
11	43127	5	BOLT, Hex, M8 x 25, 8.8,
12	100016	1	NUT, M10, Cl 8,
13	140045	2	WASHER, SPRING, Belleville, M10,
14	43140	1	BOLT, Hex, M10 x 30, 8.8, Full Thd,
15	80400813	1	HOSE, L=4M
16	323597	4	STRAP, CABLE, , BSN C363
16	86566989	4	STRAP, CABLE, , ASN D364
17	84072957	1	CAP,
18	9507949	1	WASHER, , ASN D376

02.208(01) ENGINE SUPPORTS, STARTER MOTOR AND OIL EXHAUST

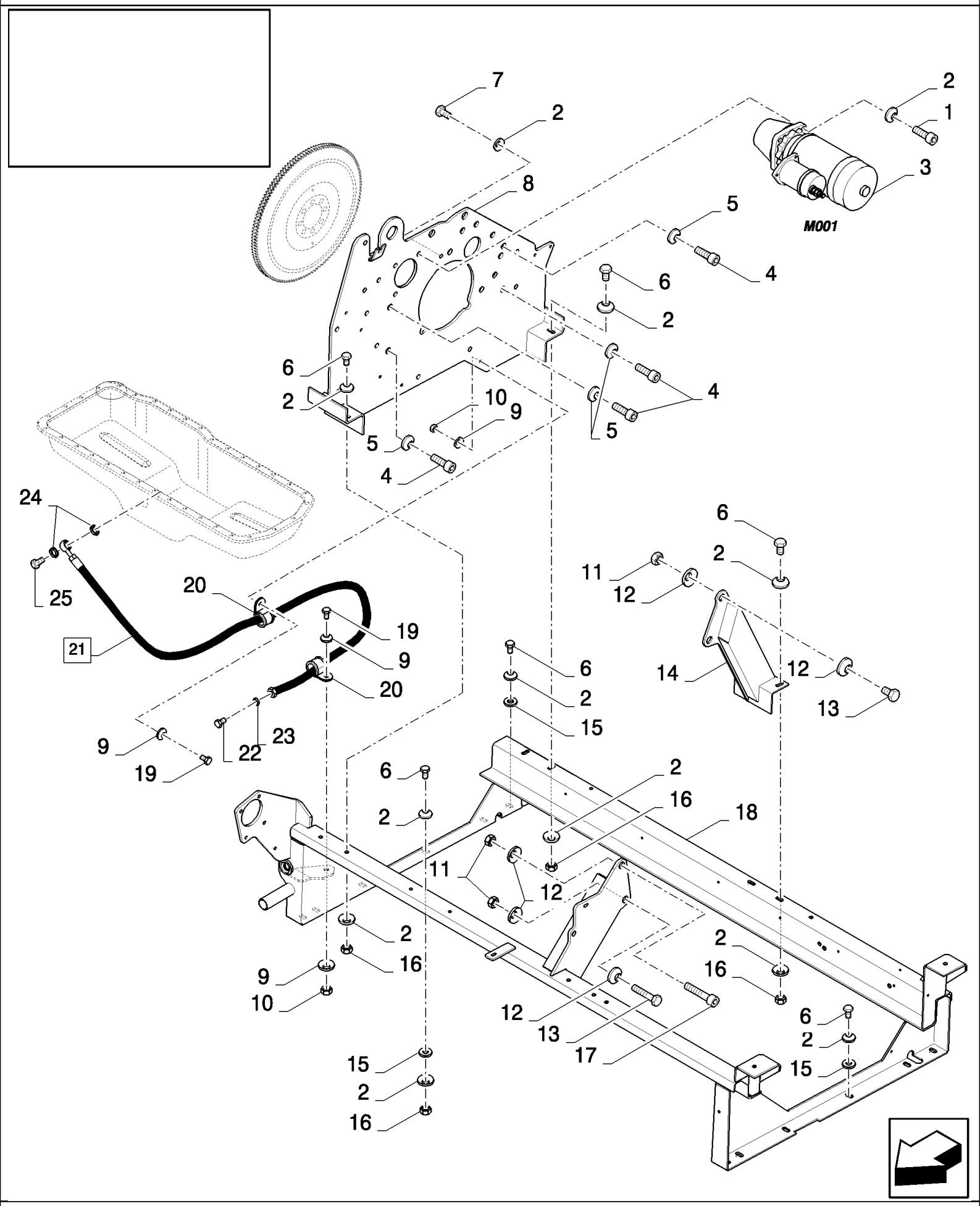

CS660 COMBINE BASE UNIT (1/03-) - Engine Equipment

02.208(01) ENGINE SUPPORTS, STARTER MOTOR AND OIL EXHAUST

ссылка	Номер детали	Кол-во	Описание
1	81869630	3	SCREW, Hex Soc Hd, M10 x 35, 8.8, M10x35
1	300442	3	SCREW, Hex Soc Hd, M10 x 30, 8.8,
2	140045	30	WASHER, SPRING, Belleville, M10,
3	84017265	1	MOTOR, STARTER, , BSN C363
3	84447906	1	MOTOR, STARTER, , ASN D364
4	9819596	4	SCREW, {PP:89819596} M16x60
5	86729275	4	WASHER, LOCK, 5/8",
6	9706704	16	BOLT, Hex, M10 x 35, 8.8, Full Thd,
7	88206	1	BOLT, Hex, 3/8"-16 x 1", G5, Full Thd,
8	84334214	1	PLATE,
9	412649	4	WASHER, SPRING, Belleville, M6,
10	15896221	2	NUT, M6, Cl 10,
11	9626598	4	NUT, LOCK, {PP:89626598} 3/4"-10, GB,
12	322359	7	WASHER, SPRING, Belleville, M20,
13	87337	3	BOLT, {PP:80087337} Hex, 3/4"-10 x 3", G5,
14	84071866	1	SUPPORT,
15	332909	10	WASHER, {PP:80332909} 10MM
16	100016	10	NUT, M10, Cl 8,
17	9802617	11	SCREW, {PP:89802617} Hex Soc Hd, 3/4"-10 x 3",
18	84432191	1	SUPPORT, , FOR CS520, CS540 ONLY, FOR CL560 ONLY
18	84075477	1	SUPPORT, , FOR CS640, CS660 ONLY
19	43117	2	BOLT, Hex, M6 x 30, 8.8,
20	418407	2	CLAMP, {PP:80418407}
21	84053731	1	HOSE, FLEXIBLE, (22 to 25)
22	150060	1	PLUG, {PP:80150060}
23	9511034	1	GASKET, {PP:89511034}
24	NSS	2	NOT SERVICED SEPARATELY, SEAL WASHER
25	NSS	1	NOT SERVICED SEPARATELY, SCREW

02.209(01) WATER CIRCUIT, SHUNT TANK

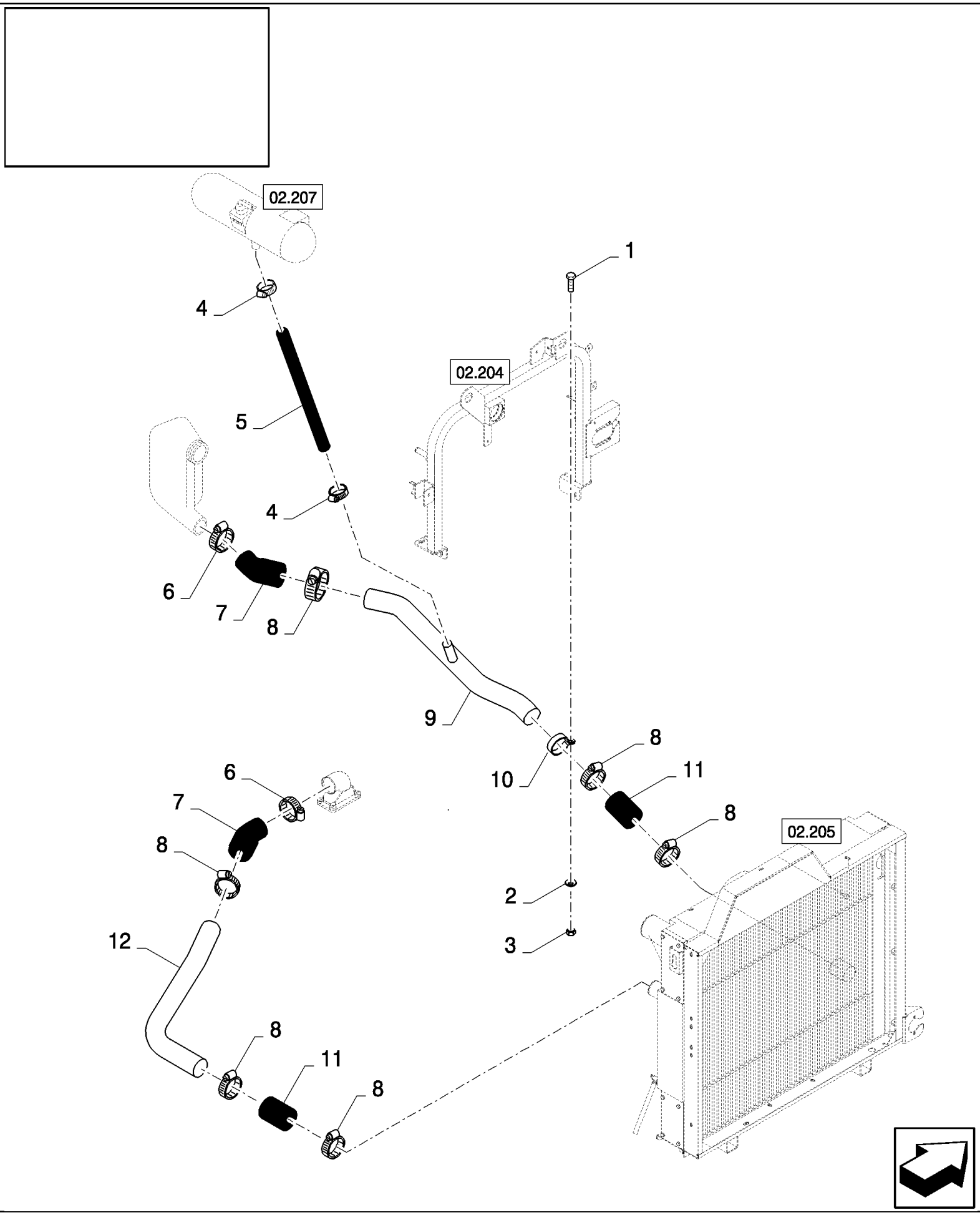

02.209(01) WATER CIRCUIT, SHUNT TANK

ссылка	Номер детали	Кол-во	Описание
1	43128	1	BOLT, Hex, M8 x 30, 8.8,
2	322358	1	WASHER, SPRING, Belleville, M8,
3	89706690	1	NUT, M8, Cl 8,
4	382527	2	CLAMP, HOSE, {PP:80382527}
5	84072294	1	HOSE,
6	360747	2	CLAMP, {PP:80360747}
7	84052895	2	HOSE,
8	556701	6	CLAMP, {PP:80556701}
9	84076029	1	TUBE, , BSN C375
9	84452598	1	TUBE, , ASN D376
10	84015625	1	CLAMP,
11	89833673	2	HOSE,
12	84076059	1	TUBE, , BSN C375
12	84452599	1	TUBE, , ASN D376

02.210(01) DRIVE, ROTARY SCREEN AND FAN

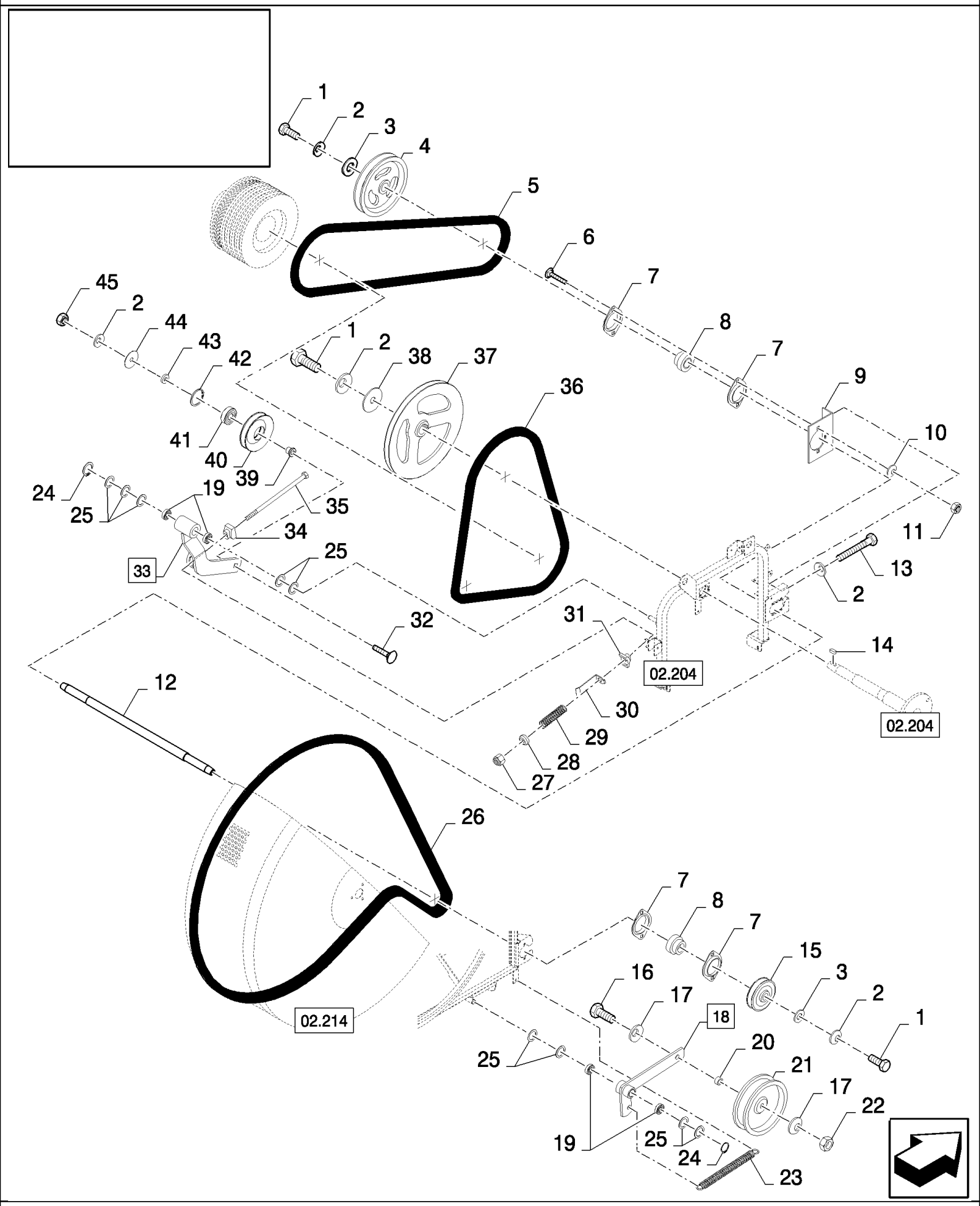

CS660 COMBINE BASE UNIT (1/03-) - Engine Equipment

02.210(01) DRIVE, ROTARY SCREEN AND FAN

ссылка	Номер детали	Кол-во	Описание
1	43139	3	SCREW, {PP:80043139} M10x25
2	140045	5	WASHER, SPRING, Belleville, M10,
3	378244	2	WASHER, M10,
4	84069907	1	PULLEY,
5	84817626	1	BELT, TRANSMISSION,
6	86507486	4	BOLT, CARRIAGE, Short NK, M8 x 20, Cl8.8, Full Thd,
7	86548974	4	FLANGE,
8	325103	2	BEARING, BALL, {PP:80325103}
9	84069925	1	PLATE,
10	322358	4	WASHER, SPRING, Belleville, M8,
11	89706690	4	NUT, M8, Cl 8,
12	84076626	1	SHAFT,
14	170005	1	KEY, {PP:80170005}
15	84989988	1	PULLEY,
16	9706702	1	BOLT, Hex, M12 x 50, 8.8,
17	140046	2	WASHER, SPRING, Belleville, M12,
18	84069802	1	LEVER, (19)
19	382974	4	SLEEVE, {PP:80382974}
20	84069986	1	BUSHING,
21	84072736	1	PULLEY,
22	9706685	1	NUT, M12, Cl 8,
23	180039	1	SPRING, {PP:80180039}
24	370024	2	RING, SNAP, {PP:80370024} M20, Ext,
25	443434	9	WASHER, {PP:80443434}
26	84989965	1	BELT, TRANSMISSION,
27	412141	1	NUT, LOCK, M10 x 1.5, Cl 8,
28	356728	1	PROTECTION CAP, {PP:80356728}
29	9817602	1	SPRING, {PP:89817602}
30	913108	1	INDICATOR, {PP:80913108}
31	442398	1	GUIDE, {PP:80442398}
32	350459	1	BOLT, CARRIAGE, Short NK, M10 x 50, Cl8.8, Full Thd,
33	84432229	1	LEVER, (19)
34	754131	1	GUIDE, {PP:80754131}
35	9514334	1	ROD, {PP:89514334}
36	84061465	1	BELT, TRANSMISSION,
37	84076110	1	PULLEY,
38	140042	1	WASHER, M10 x 34 x 3,
39	84076633	1	BUSHING,
40	84432577	1	PULLEY,
41	727874	1	BEARING ASSY, {PP:80727874}
42	300647	1	RING, SNAP, {PP:80300647} M47, Int,
43	200090	1	WASHER, {PP:80200090}
44	140198	1	WASHER, {PP:80140198}
45	100016	1	NUT, M10, Cl 8,
13	43144	1	BOLT, Hex, M10 x 70, 8.8,

02.211(01) EXHAUST AND AIR FILTER, OIL FILTER ON ENGINE

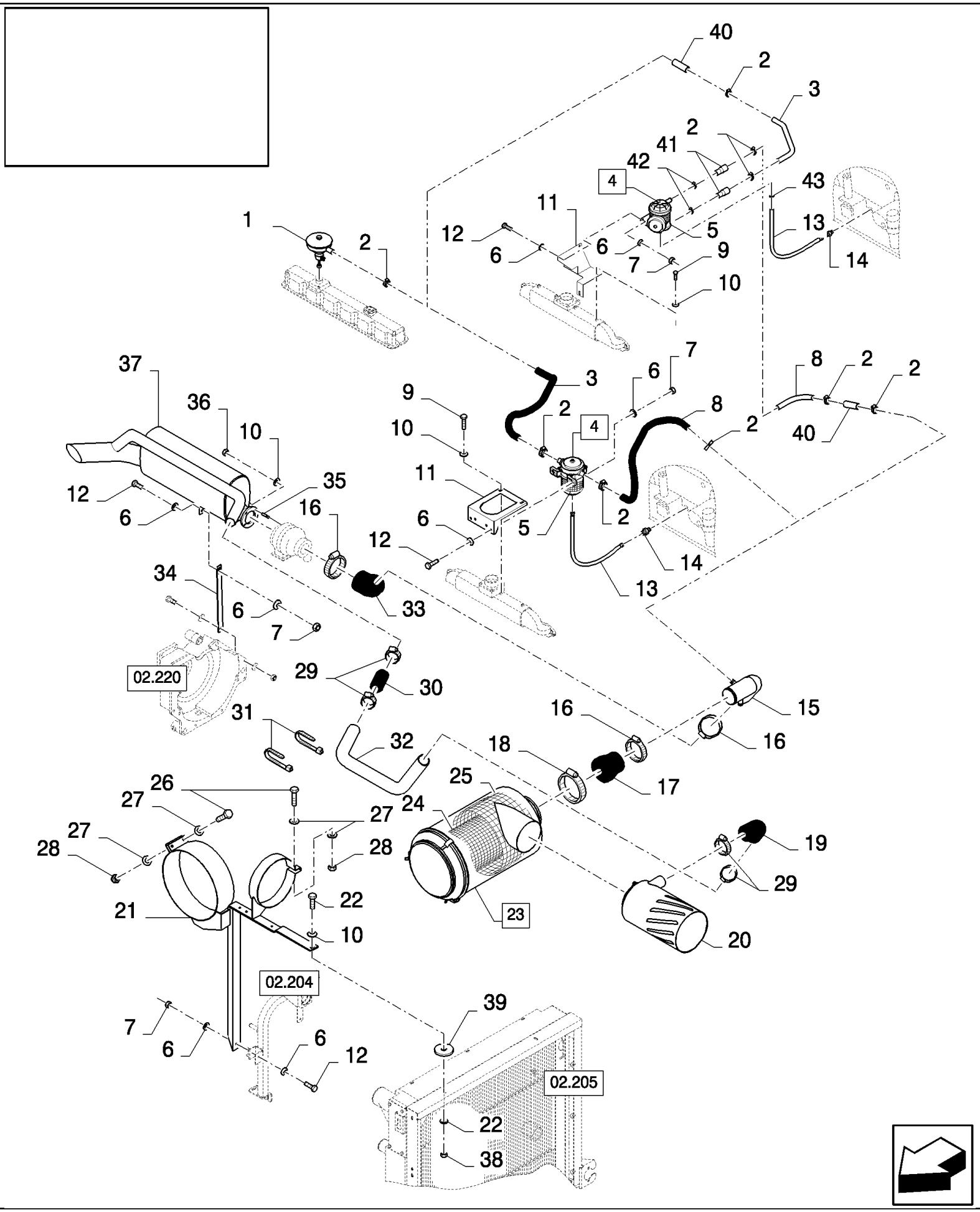

02.211(01) EXHAUST AND AIR FILTER, OIL FILTER ON ENGINE

ссылка	Номер детали	Кол-во	Описание
1	84012669	1	OIL SEPARATOR, , BSN C479
1	84459266	1	OIL SEPARATOR, , ASN D480
2	382527	AR	CLAMP, HOSE,
3	84434547	1	HOSE, , BSN C479
3	84461496	1	REEL, , ASN D480
4	84441871	1	FILTER, ENGINE OIL, (5), BSN C479
4	84461272	1	OIL SEPARATOR, (5), ASN D480
5	84433655	1	FILTER, ELEMENT, , BSN C479
5	87802519	1	FILTER, ELEMENT, , ASN D480
6	140045	8	WASHER, SPRING, Belleville, M10,
7	100016	4	NUT, M10, Cl 8,
8	84434665	1	HOSE, , BSN C479
8	84461432	1	PIPE, VENTILATION, , ASN D480
9	16043224	2	BOLT, Hex, M8 x 16, 8.8, Full Thd,
10	322358	7	WASHER, SPRING, Belleville, M8,
11	84434557	1	SUPPORT, , BSN C479
11	84461411	1	SUPPORT, , ASN D480
12	43140	AR	BOLT, Hex, M10 x 30, 8.8, Full Thd,
12	43138	AR	BOLT, Hex, M10 x 20, 8.8, Full Thd,
13	84437193	1	HOSE, FLEXIBLE, , BSN C479
13	87323092	1	HOSE, , ASN D480
14	84433025	1	VALVE, ADVANCE,
15	84442781	1	TUBE, , BSN C479
15	84461437	1	TUBE, , ASN D480
16	89706924	3	CLAMP,
17	84989762	1	HOSE,
18	337049	1	CLAMP,
19	84334353	1	HOSE,
20	84442626	1	PRE-CLEANER ASSY, AIR,
21	84442735	1	SUPPORT, , BSN C375
21	84452510	1	SUPPORT, , ASN D376
22	43127	1	BOLT, Hex, M8 x 25, 8.8,
22	43128	1	BOLT, Hex, M8 x 30, 8.8,
23	84442615	1	FILTER, AIR, (24,25)
24	84072430	1	FILTER, ELEMENT,
25	84072431	1	FILTER, ELEMENT,
26	43129	3	BOLT, Hex, M8 x 40, 8.8,
27	378243	6	WASHER, M8,
28	86629542	3	NUT, LOCK, M8 x 1.25, Cl 8,
29	556701	4	CLAMP,
30	84011850	1	HOSE,
31	396718	2	STRAP,
32	84442787	1	TUBE,
33	84989731	1	HOSE,
34	84989751	1	SUPPORT,

02.211(01) EXHAUST AND AIR FILTER, OIL FILTER ON ENGINE

ссылка	Номер детали	Кол-во	Описание
35	84031344	4	STUD,
36	84041352	4	NUT, LOCK, M8 x 1.25, Cl8.8,
37	84076443	1	MUFFLER,
38	89706690	1	NUT, M8, Cl 8,
39	9507949	1	WASHER, , ASN D376
40	84334169	1	HOSE, , ASN D480
41	84461300	2	HOSE, , ASN D480
42	326082	2	CLAMP, , ASN D480
43	89706921	1	CLAMP, , ASN D480

02.212(01) PNEUMATIC CLUTCH FOR MAIN DRIVE

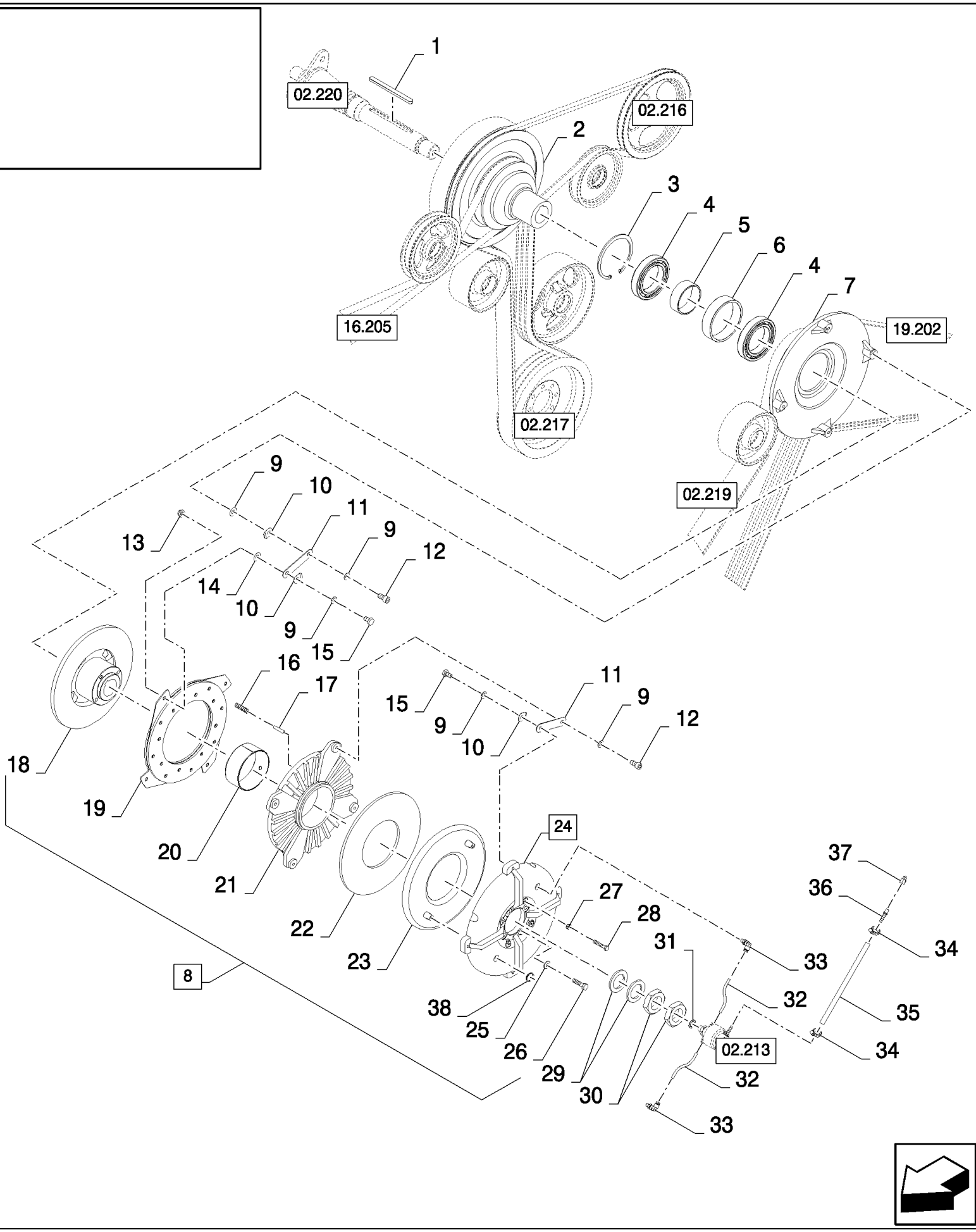

02.212(01) PNEUMATIC CLUTCH FOR MAIN DRIVE

ссылка	Номер детали	Кол-во	Описание
1	84440660	1	KEY,
2	84980737	1	PULLEY,
3	388294	1	RING, SNAP, {PP:80388294} M125, Int,
4	80825070	2	BEARING ASSY,
5	84026152	1	SPACER,
6	84026151	1	BUSHING,
7	84981164	1	PULLEY,
8	84442472	1	CLUTCH, (9 to 28)
9	80300368	16	WASHER, , BSN C391
9	140045	14	WASHER, SPRING, {PP:80140045} Belleville, M10, , ASN D362
10	84992726	12	CLIP, SPRING,
11	80825066	8	CLIP, SPRING,
12	43138	4	BOLT, Hex, M10 x 20, 8.8, Full Thd,
12	86528768	4	SCREW, Hex Soc Hd, M10 x 20, 12.9, M10x20
13	100037	4	NUT, M10 x 1.5, Cl 8,
13	100016	4	NUT, M10, Cl 8,
14	331160	12	WASHER, {PP:80331160} 10MM
15	43138	8	BOLT, Hex, M10 x 20, 8.8, Full Thd,
16	80825727	4	SPRING,
17	9511051	4	PIN, LOCK, {PP:89511051} M6 x 30, Slotted,
18	84981172	1	PLATE, CLUTCH, DRIVING,
19	84981128	1	DISC,
20	84981616	1	SLEEVE,
21	84981176	1	DISC,
22	84981150	1	RING, INSULATING,
23	84981149	1	TUBE,
24	84981603	1	DISC, , BSN C323
24	84982741	1	DISC, (23,38), ASN D324
25	140045	4	WASHER, SPRING, Belleville, M10,
26	9706704	4	BOLT, Hex, M10 x 35, 8.8, Full Thd,
27	89706690	4	NUT, M8, Cl 8,
28	86625002	4	BOLT, Hex, M8 x 45, 8.8, Full Thd, M8x45
29	9502822	2	WASHER, {PP:89502822} 43MM
30	80300863	2	NUT, M42x1.5
31	140020	1	WASHER, {PP:80140020} M16 x 30 x 3,
32	84981895	2	HOSE, , BSN C323
32	84607921	2	HOSE, L=0.196M, ASN D324
33	80825500	2	CONNECTOR, HYD.,
34	80150064	2	CLAMP,
35	80823517	1	HOSE,
36	80822863	1	CONNECTOR, HYD.,
37	80823522	1	CONNECTOR, HYD.,
38	370016	2	RING, SNAP, {PP:80370016} M17, Ext, , ASN D324

02.213(01) ROTARY UNION FOR PNEUMATIC CLUTCH

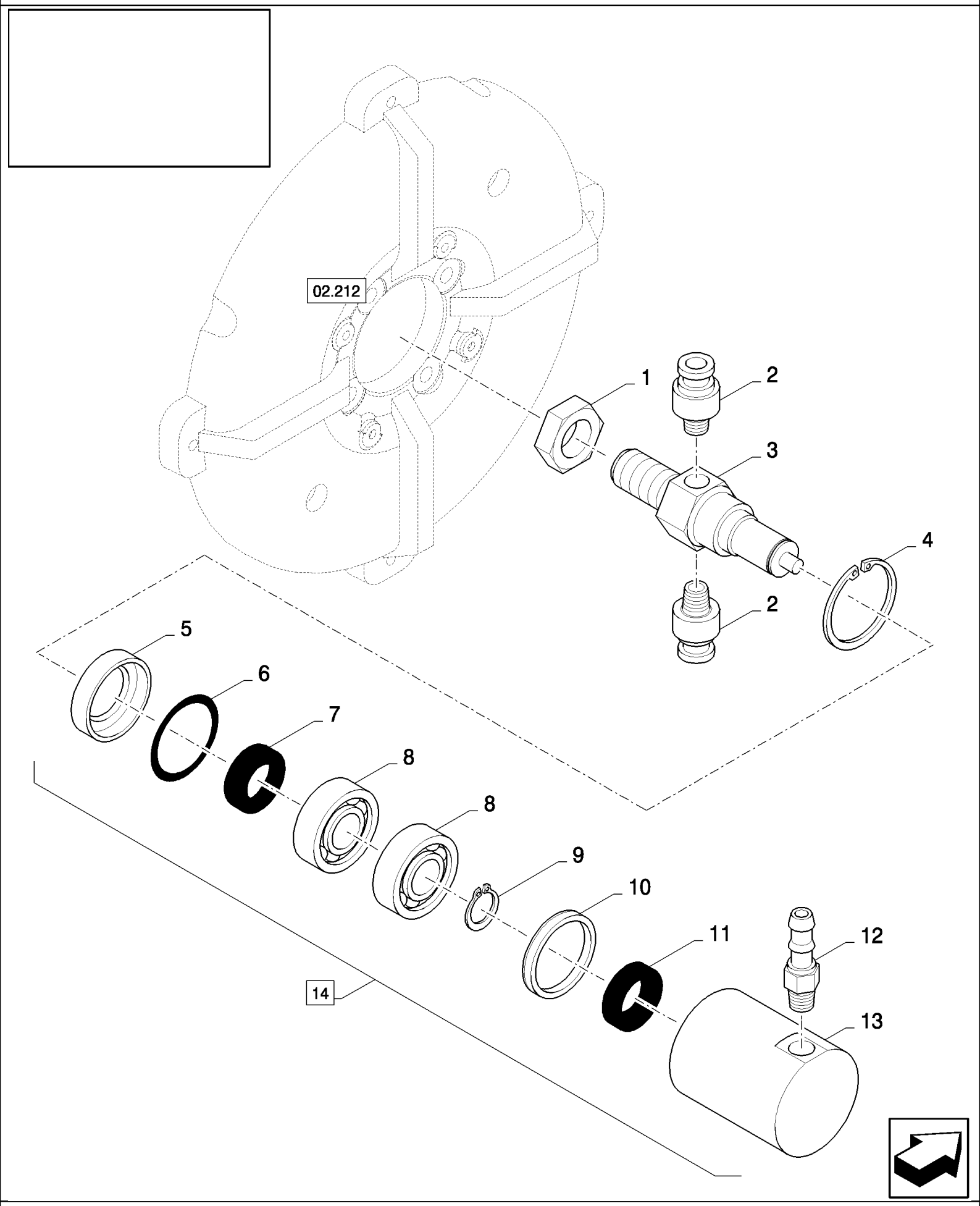

02.213(01) ROTARY UNION FOR PNEUMATIC CLUTCH

ссылка	Номер детали	Кол-во	Описание
1	100020	1	NUT, M16, Cl 8, , BSN C347
1	100095	1	NUT, {PP:80100095} Thin, M16 x 2, Cl 04, , ASN D348
2	89576743	2	CONNECTOR, HYD.,
3	84982460	1	SHAFT, , BSN C347
3	84448629	1	SHAFT, , ASN D348
4	300642	1	RING, SNAP, {PP:80300642} M35, Int,
5	84992797	1	FLANGE,
6	80822862	1	O-RING,
7	84992799	1	RING,
8	80301162	2	BEARING ASSY,
9	301615	1	RING, SNAP, {PP:80301615}
10	84992796	1	FLANGE,
11	84992798	1	RING,
12	80822863	1	CONNECTOR, HYD.,
13	84992776	1	BEARING ASSY,
14	84982496	1	COUPLING, (1 to 13)

02.214(01) REVOLVING DUST SCREEN

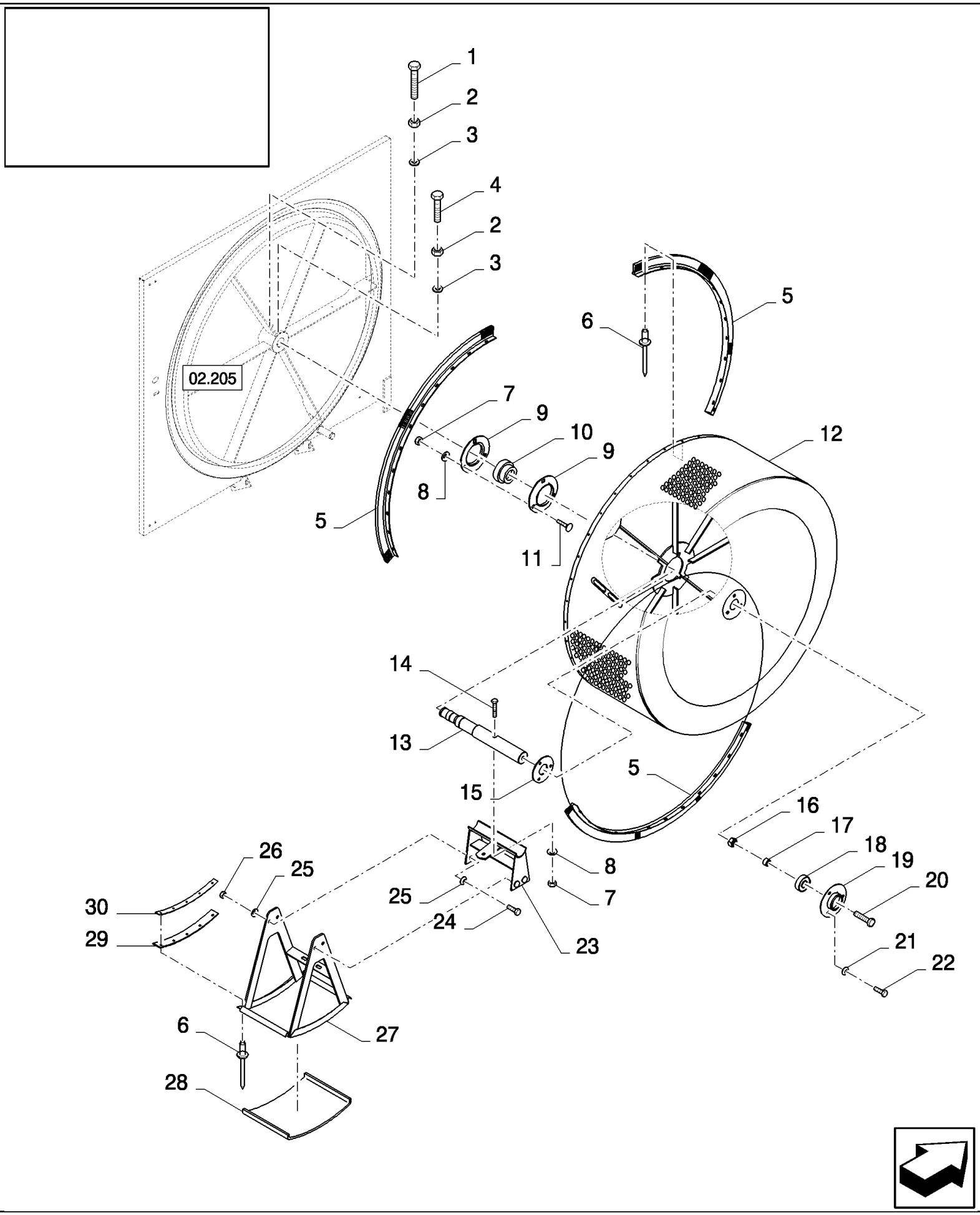

CS660 COMBINE BASE UNIT (1/03-) - Engine Equipment

02.214(01) REVOLVING DUST SCREEN

ссылка	Номер детали	Кол-во	Описание
1	84062222	1	BOLT, Hex, M10 x 45, 8.8, Full Thd, M10x45
2	320648	2	NUT, {PP:80320648} M10, Cl 8, M10
3	86511323	2	WASHER, M10 x 20 x 2,
4	120112	1	BOLT, Hex, M10 x 40, 8.8, Full Thd,
5	84073020	3	BRUSH,
6	NS	41	NOT SERVICED, Rivet
7	100016	4	NUT, M10, Cl 8,
8	140045	4	WASHER, SPRING, Belleville, M10,
9	36403	2	FLANGE, {PP:80036403}
10	322360	1	BEARING, BALL, {PP:80322360}
11	120041	3	BOLT, CARRIAGE, Short NK, M10 x 20, Cl8.8, Full Thd, M10x20
12	84073372	1	SCREEN,
13	84073244	1	SHAFT, , BSN C347
13	84449131	1	SHAFT, , ASN D348
14	120070	1	BOLT, Hex, M10 x 60, 8.8,
15	84071581	1	SUPPORT,
16	9706685	1	NUT, M12, Cl 8,
17	434182	1	BUSHING, {PP:80434182}
18	362804	1	BEARING, BALL, {PP:80362804}
19	365018	1	FLANGE, {PP:80365018}
20	120122	1	BOLT, Hex, M12 x 50, 8.8, Full Thd,
21	322357	3	WASHER, SPRING, Belleville, M6,
22	86508568	3	BOLT, Hex, M6 x 16, 8.8,
23	84073251	1	SUPPORT, , BSN C347
23	84449135	1	SUPPORT, , ASN D348
24	120104	2	BOLT, Hex, M8 x 20, 8.8,
25	322358	6	WASHER, SPRING, Belleville, M8,
26	89706690	4	NUT, M8, Cl 8,
27	84073296	1	SCREEN,
28	84073305	1	INSULATOR, , BSN C511
28	87377800	1	INSULATOR, , ASN D512
29	84434055	1	CANVAS,
30	84434286	1	PLATE, FIXING,

02.215(01) BRUSH IN DUST SCREEN

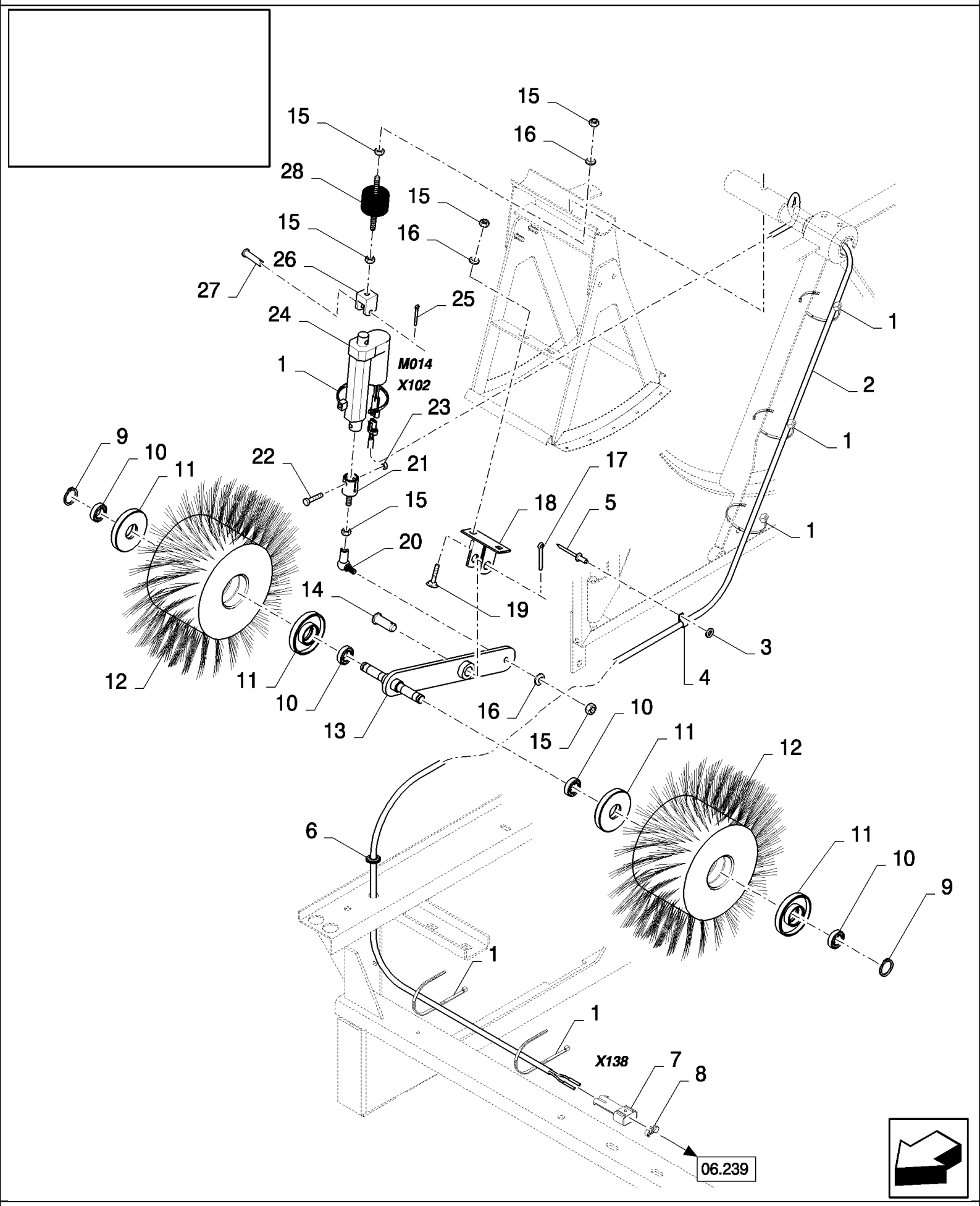

02.215(01) BRUSH IN DUST SCREEN

ссылка	Номер детали	Кол-во	Описание
1	86566989	6	STRAP, CABLE,
2	84437301	1	HARNESS, WIRE, , SEE FIGURE 06.526
3	9824326	1	WASHER, {PP:89824326} M5, 5MM
4	9507807	1	CLAMP, {PP:89507807}
5	NS	1	NOT SERVICED, Rivet
6	411809	1	GROMMET, {PP:80411809}
7	84074630	1	CONNECTOR, WIRE,
8	86500166	1	PLUG,
9	301615	2	RING, SNAP, {PP:80301615}
10	9815813	4	BEARING ASSY, {PP:89815813}
11	84437302	4	HOUSING, BEARING,
12	84072026	2	BRUSH, , BSN C347
12	84449076	2	BRUSH, , ASN D348
13	84072626	1	LEVER, , BSN C347
13	84449090	1	LEVER, , ASN D348
14	84072127	1	PIN,
15	89706690	7	NUT, M8, Cl 8,
16	322358	4	WASHER, SPRING, Belleville, M8,
17	130007	1	PIN, SPLIT (COTTER), {PP:80130007} M4 x 25,
18	84071754	1	SUPPORT,
19	86507486	2	BOLT, CARRIAGE, Short NK, M8 x 20, Cl8.8, Full Thd,
20	412439	1	BALL JOINT, {PP:80412439}
21	84071712	1	CLEVIS,
22	86977789	1	BOLT, Hex, M6 x 35, 8.8,
23	353308	1	NUT, LOCK, M6 x 1, Cl 8,
24	84440048	1	ACTUATOR, , SEE FIGURE 06.701
25	86977785	1	PIN, SPLIT (COTTER), M1.6 x 20,
26	84026054	1	SUPPORT,
27	376876	1	PIN, CLEVIS, {PP:80376876} M6 x 30,
28	393802	1	SHOCK ABSORBER, {PP:80393802}

02.216(01) HYDRAULIC PUMP DRIVE

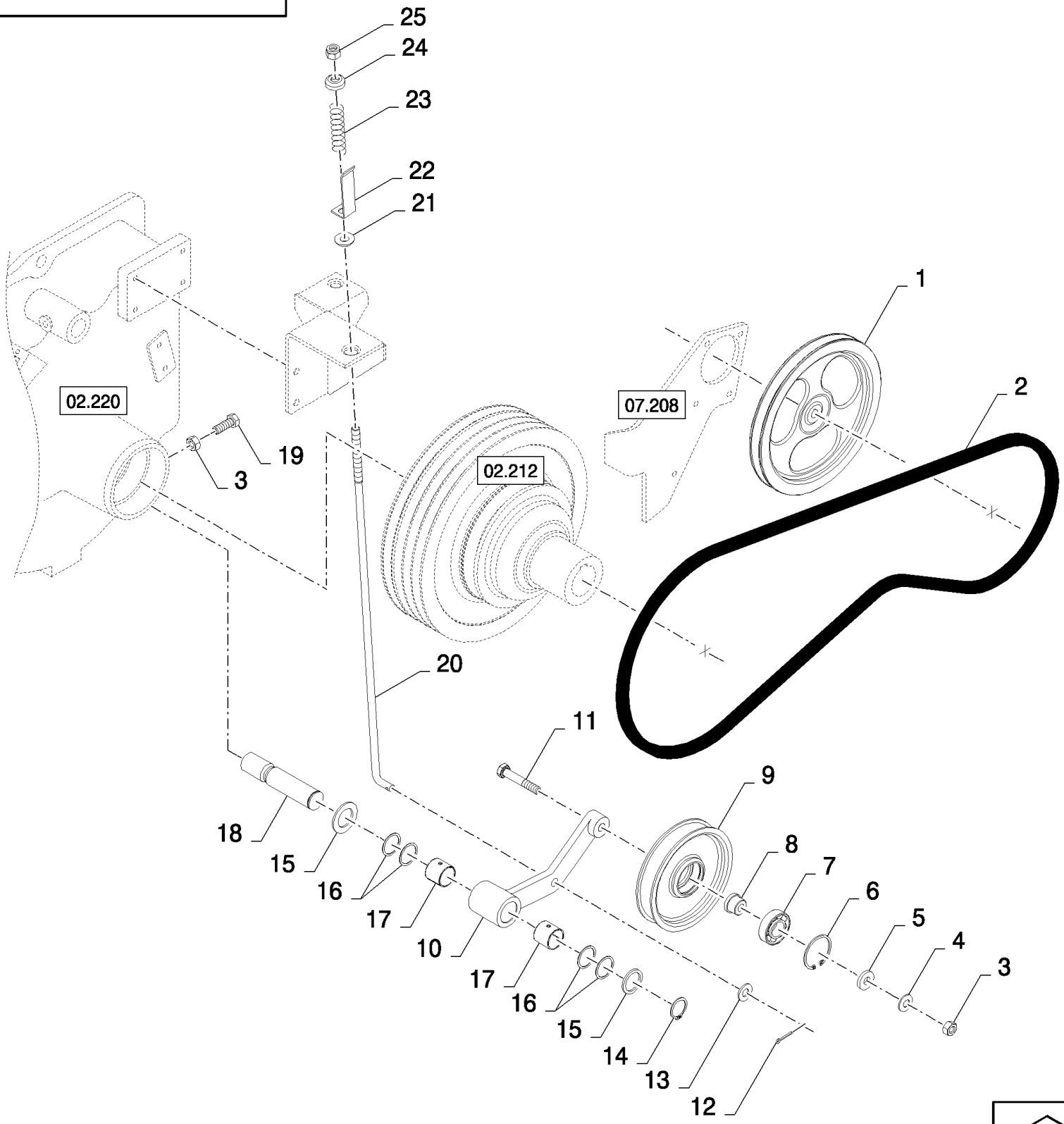

CS660 COMBINE BASE UNIT (1/03-) - Engine Equipment

02.216(01) HYDRAULIC PUMP DRIVE

ссылка	Номер детали	Кол-во	Описание
1	84980773	1	PULLEY,
2	80427456	1	BELT, TRANSMISSION,
3	9706685	2	NUT, M12, Cl 8,
4	140046	1	WASHER, SPRING, Belleville, M12,
5	84000016	1	WASHER, 12MM
6	370011	1	RING, SNAP, {PP:80370011} M52, Int,
7	443898	1	BEARING, BALL, {PP:80443898}
8	84022798	1	BUSHING,
9	84980739	1	PULLEY,
10	84980768	1	LEVER,
11	9706717	1	BOLT, {PP:89706717} Hex, M12 x 70, 8.8, Full Thd, Hex, M12 x 70, 8.8, Full Thd
12	130007	1	PIN, SPLIT (COTTER), {PP:80130007} M4 x 25,
13	378245	1	WASHER, {PP:80378245} M12, 13MM
14	370003	1	RING, SNAP, {PP:80370003} M30, Ext,
15	140110	2	WASHER, {PP:80140110} 31MM
16	140108	AR	WASHER, {PP:80140108} 31MM
17	420410	2	BUSHING, {PP:80420410}
18	84980749	1	SHAFT,
19	300389	1	BOLT, Hex, M12 x 35, 8.8, Full Thd,
20	84981520	1	ROD,
21	84607945	1	WASHER,
22	84980886	1	INDICATOR,
23	440651	1	SPRING, {PP:80440651}
24	84980900	1	PROTECTION CAP,
25	412126	1	NUT, LOCK, M12 x 1.75, Cl 8,

02.217(01) HYDROSTATIC PUMP DRIVE

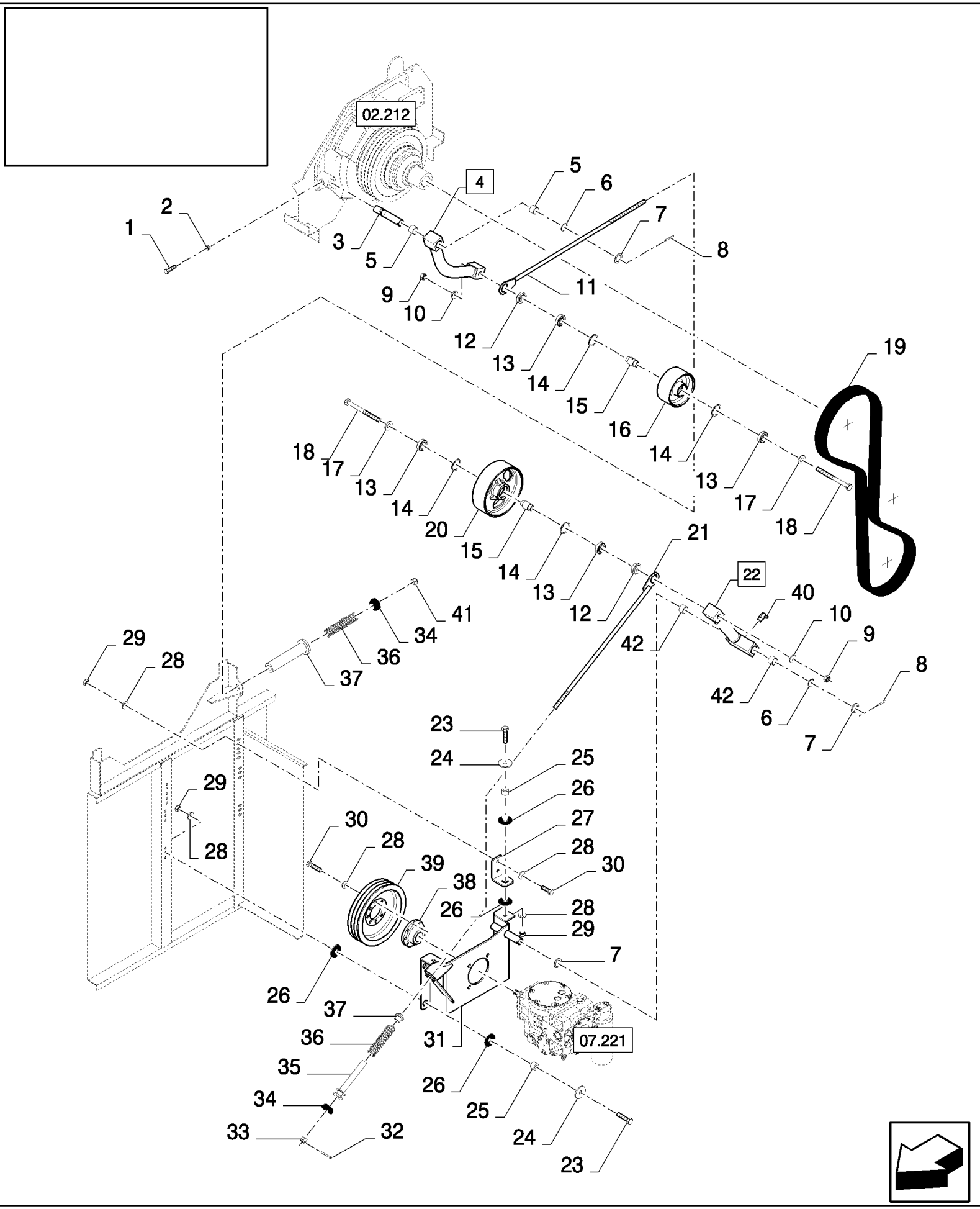

02.217(01) HYDROSTATIC PUMP DRIVE

ссылка	Номер детали	Кол-во	Описание
1	86629541	1	BOLT, Hex, M12 x 40, 8.8, Full Thd,
2	9706685	1	NUT, M12, Cl 8,
3	84447790	1	SHAFT,
4	84447775	1	ARM, (5)
5	420410	4	BUSHING, {PP:80420410}
6	140108	AR	WASHER, {PP:80140108} 31MM
7	84814901	3	WASHER,
8	412689	2	PIN, LOCK, {PP:80412689} M8 x 50, Slotted,
9	100020	2	NUT, M16, Cl 8,
10	140048	2	WASHER, SPRING, Belleville, M16,
11	84447292	1	ROD, THREADED, , FOR CS520 ONLY
11	84447338	1	ROD, THREADED, , FOR CS660 ONLY, FOR CS540, CS640 ONLY, FOR CL560 ONLY
12	84437259	2	BUSHING,
13	443898	4	BEARING, BALL, {PP:80443898}
14	370011	4	RING, SNAP, {PP:80370011} M52, Int,
15	84437588	2	BUSHING,
16	84980775	1	WHEEL, IDLER,
17	140190	2	WASHER, {PP:80140190} 16MM
18	84435244	2	BOLT, Hex, M16 x 180, 8.8, M16x180
19	84607712	1	BELT, TRANSMISSION, , FOR CS540, CS640 ONLY, FOR CS520 ONLY
19	84607713	1	BELT, TRANSMISSION, , FOR CS660 ONLY, FOR CL560 ONLY
20	84437268	1	WHEEL, IDLER,
21	84437883	1	ROD, THREADED,
21	84447333	1	ROD, THREADED,
22	84447237	1	ARM, (42)
23	120112	6	BOLT, Hex, M10 x 40, 8.8, Full Thd,
24	140082	6	WASHER, {PP:80140082}
24	84817997	6	WASHER, 40 OD x 11 ID x 3 mm Thick
25	84989876	6	BUSHING,
26	84989853	12	DAMPER,
27	84989870	2	BRACKET,
28	140045	22	WASHER, SPRING, Belleville, M10,
29	100016	10	NUT, M10, Cl 8,
30	43140	12	BOLT, Hex, M10 x 30, 8.8, Full Thd,
31	84447273	1	SUPPORT, , FOR CS540, CS640 ONLY, FOR CS520 ONLY
31	84447272	1	SUPPORT, , FOR CS660 ONLY, FOR CL560 ONLY
32	412685	1	PIN, SPLIT (COTTER), {PP:80412685} M4 x 32,
33	84437882	1	NUT, SLOTTED, M16 x 2, Cl 8,
34	84447242	2	WASHER, RUBBER,
35	84447601	1	RETAINER,
36	84447615	2	SPRING,
37	84447581	1	RETAINER,
38	84980732	1	HUB, , FOR CS540, CS640 ONLY, FOR CS520 ONLY
38	84437986	1	HUB, , FOR CS660 ONLY, FOR CL560 ONLY
39	84437983	1	PULLEY, , FOR CS520 ONLY

02.217(01) HYDROSTATIC PUMP DRIVE

ссылка	Номер детали	Кол-во	Описание
39	84980717	1	PULLEY, , FOR CS540, CS640 ONLY
39	84437988	1	PULLEY, , FOR CS660 ONLY, FOR CL560 ONLY
40	332040	1	NIPPLE, LUBE, {PP:80332040} 90є, 1/8" NPT x .84" lg,
41	412066	1	NUT, LOCK, {PP:80412066} M16 x 2, Cl 8, M16
42	420434	2	BUSHING, {PP:80420434}

02.218(01) GAS ACTUATOR

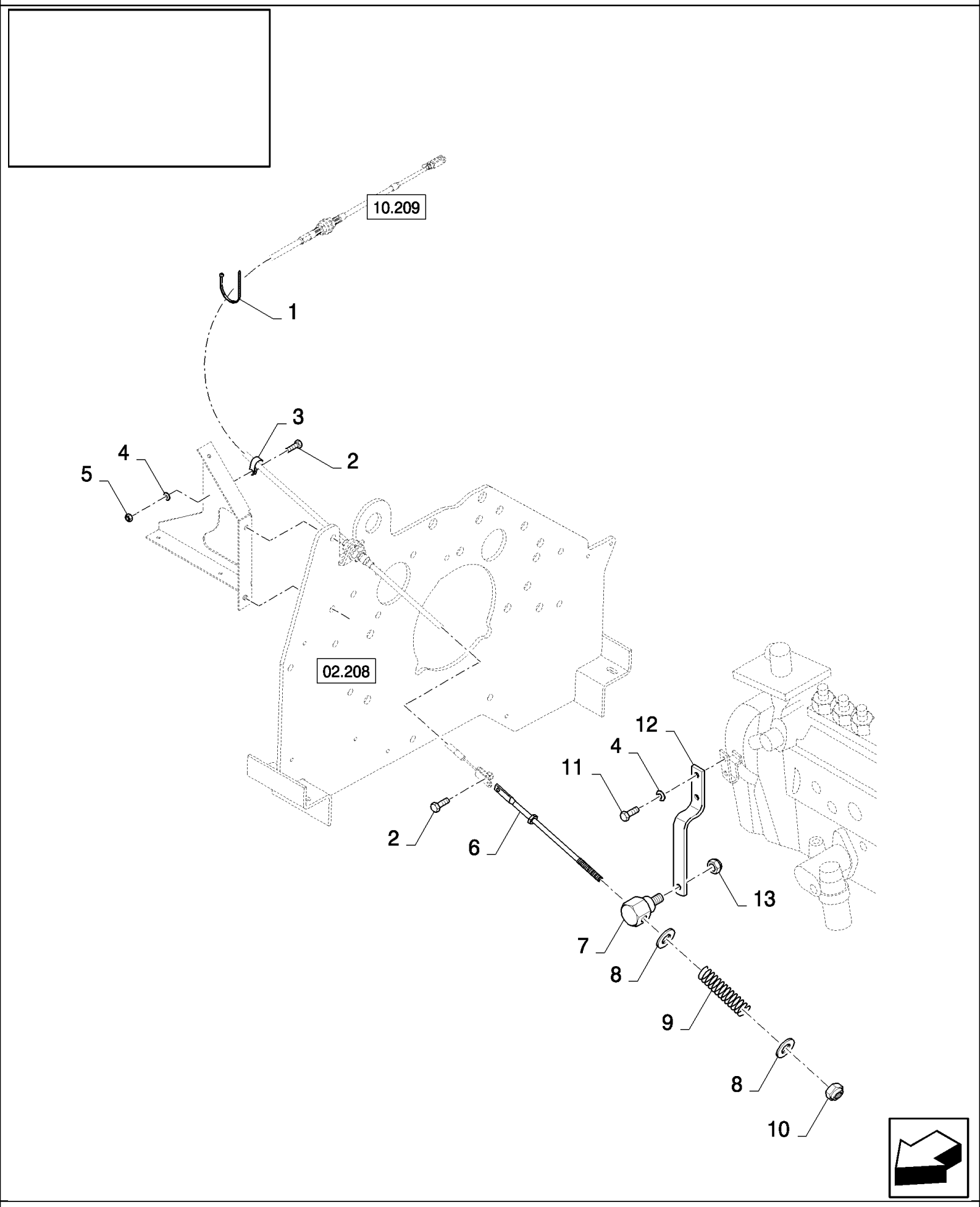

02.218(01) GAS ACTUATOR

ссылка	Номер детали	Кол-во	Описание
1	86566989	1	STRAP, CABLE,
2	120100	2	BOLT, Hex, M6 x 20, 8.8,
3	431352	1	CLAMP, {PP:80431352}
4	412649	3	WASHER, SPRING, Belleville, M6,
5	15896221	1	NUT, M6, Cl 10,
6	89833323	1	TIE-ROD,
7	80439693	1	ROD,
8	378244	2	WASHER, M10,
9	80439176	1	SPRING,
10	412141	1	NUT, LOCK, M10 x 1.5, Cl 8,
11	86508568	2	BOLT, Hex, M6 x 16, 8.8,
12	84071044	1	LEVER,
13	86629542	1	NUT, LOCK, M8 x 1.25, Cl 8,
13	353308	1	NUT, LOCK, {PP:80353308} M6 x 1, Cl 8, , FOR CL560 ONLY

02.219(01) MAIN DRIVE

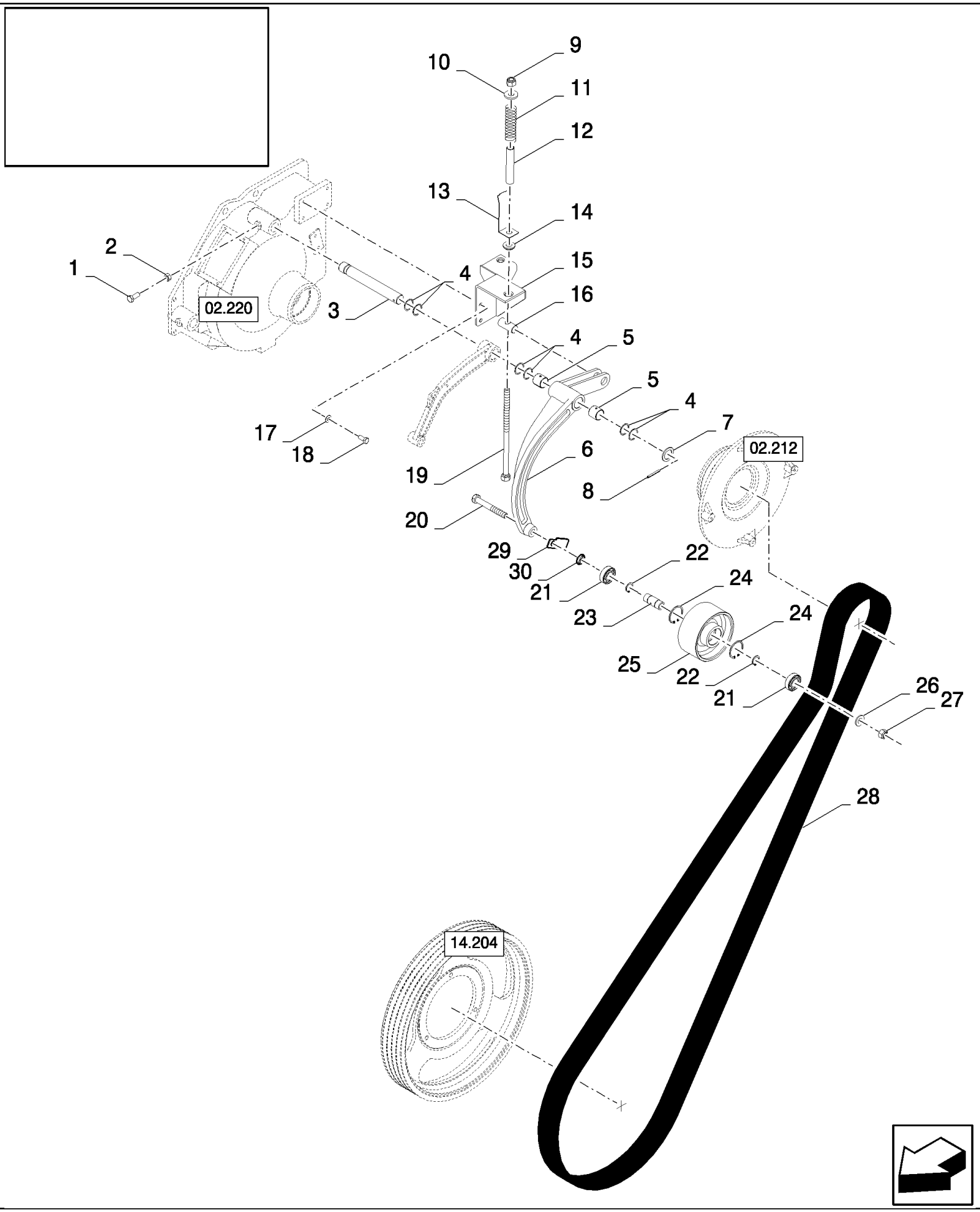

02.219(01) MAIN DRIVE

ссылка	Номер детали	Кол-во	Описание
1	300389	1	BOLT, Hex, M12 x 35, 8.8, Full Thd,
2	9706685	1	NUT, M12, Cl 8,
3	84995657	1	SHAFT, , BSN C419
3	84983314	1	SHAFT, , ASN D420
4	140108	AR	WASHER, {PP:80140108} 31MM
5	420410	2	BUSHING, {PP:80420410}
6	84444573	1	LEVER, , BSN C415
6	84457777	1	LEVER, , ASN D416
7	84814901	1	WASHER,
8	333960	1	PIN, LOCK, {PP:80333960} M6 x 50, Slotted,
9	412066	1	NUT, LOCK, {PP:80412066} M16 x 2, Cl 8, M16
10	325594	1	WASHER, {PP:80325594} 16MM, BSN C415
10	84005115	1	WASHER, , ASN D416
11	392328	1	SPRING, {PP:80392328}
12	84981521	1	GUIDE,
13	84981727	1	INDICATOR, , BSN C415
13	84457866	1	INDICATOR, , ASN D416
14	450869	1	WASHER, {PP:80450869}
15	84442443	1	SUPPORT, , BSN C375
15	84447341	1	SUPPORT, , ASN D376
16	321886	1	SPINDLE, {PP:80321886}
17	140045	4	WASHER, SPRING, Belleville, M10,
18	43139	4	SCREW, {PP:80043139} M10x25
19	450871	1	BOLT, {PP:80450871}
20	362573	1	BOLT, Hex, M16 x 150, 8.8,
21	443898	2	BEARING, BALL, {PP:80443898}
22	370002	2	RING, SNAP, {PP:80370002} M25, Ext,
23	84980609	1	BUSHING,
24	370011	2	RING, SNAP, {PP:80370011} M52, Int,
25	84980775	1	WHEEL, IDLER,
26	378246	1	WASHER, {PP:80378246} 16MM
27	86000441	1	NUT, LOCK, M16 x 2, Cl 8,
28	84993120	1	BELT, TRANSMISSION,
29	84457807	1	PLATE,
30	84457813	1	RING,

02.220(01) MAIN SHAFT ON ENGINE

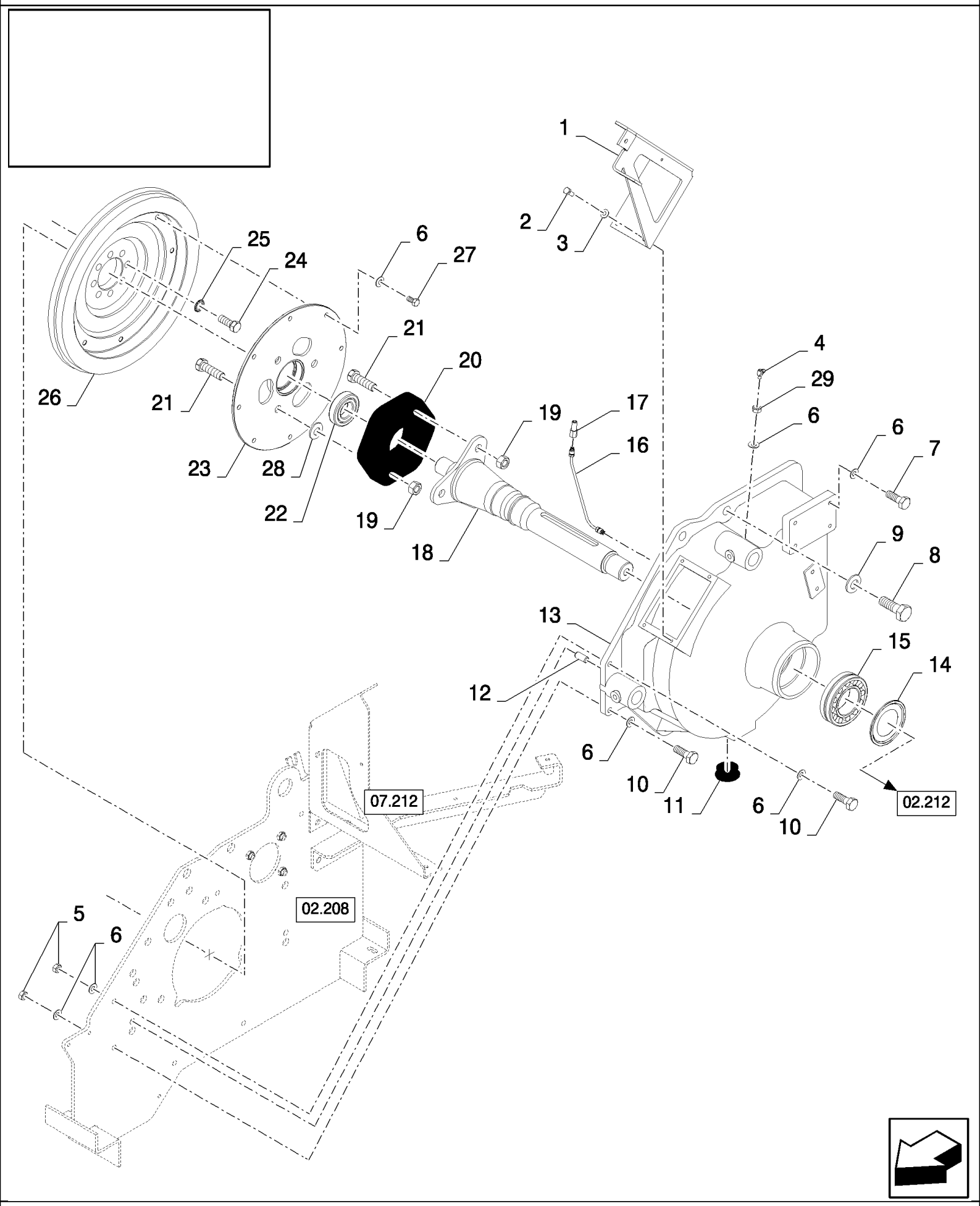

CS660 COMBINE BASE UNIT (1/03-) - Engine Equipment

02.220(01) MAIN SHAFT ON ENGINE

ссылка	Номер детали	Кол-во	Описание
1	84980896	1	SUPPORT,
2	120104	4	BOLT, Hex, M8 x 20, 8.8,
3	322358	4	WASHER, SPRING, Belleville, M8,
4	84814929	1	NIPPLE, LUBE,
5	100016	6	NUT, M10, Cl 8,
6	140045	21	WASHER, SPRING, Belleville, M10,
7	9706704	4	BOLT, Hex, M10 x 35, 8.8, Full Thd,
8	86512047	2	BOLT, Hex, 3/4-16 x 2 1/4", G8, Full Thd,
9	322359	2	WASHER, SPRING, Belleville, M20,
10	325829	2	BOLT, {PP:80325829} Hex, M10 x 45, 8.8, M10x45
11	9513759	1	PLUG, {PP:89513759}
12	9511886	2	PIN, {PP:89511886} , BSN C415
12	80081848	2	PIN, , ASN D416
13	84980699	1	HOUSING,
14	433833	1	SEALRING, {PP:80433833}
15	428162	1	BEARING ASSY, {PP:80428162}
16	84981800	1	TUBE,
17	84817004	1	CONNECTOR, HYD.,
18	84981857	1	SHAFT, , BSN C363
18	84452851	1	SHAFT, , ASN D364
19	100020	6	NUT, M16, Cl 8,
20	450679	1	COUPLING, FLEXIBLE, {PP:80450679}
21	385923	6	BOLT, {PP:80385923} Hex, M16 x 55, 8.8, Full Thd, Hex, M16 x 55, 8.8, Full Thd, BSN C363
21	9819596	6	SCREW, {PP:89819596} M16x60, ASN D364
22	84441185	1	BEARING ASSY,
23	84981861	1	DISC, , BSN C363
23	84452852	1	DISC, , ASN D364
24	280690	8	BOLT, {PP:80280690} Hex, 9/16"-18 x 1 1/4", G5, Full Thd,
25	140047	8	WASHER, LOCK, {PP:80140047} 14MM
26	9825192	1	FLYWHEEL, ENGINE, {PP:89825192}
27	88434	8	BOLT, {PP:80088434} Hex, 3/8"-16 x 3/4", G5, Full Thd,
28	393062	3	WASHER, {PP:80393062}
29	100016	1	NUT, M10, Cl 8, , BSN C415
29	84807411	1	NUT, Thin, M10 x 1.5, Cl 04, , ASN D416

02.221(01) BLOW-OFF SYSTEM, AIR COMPRESSOR

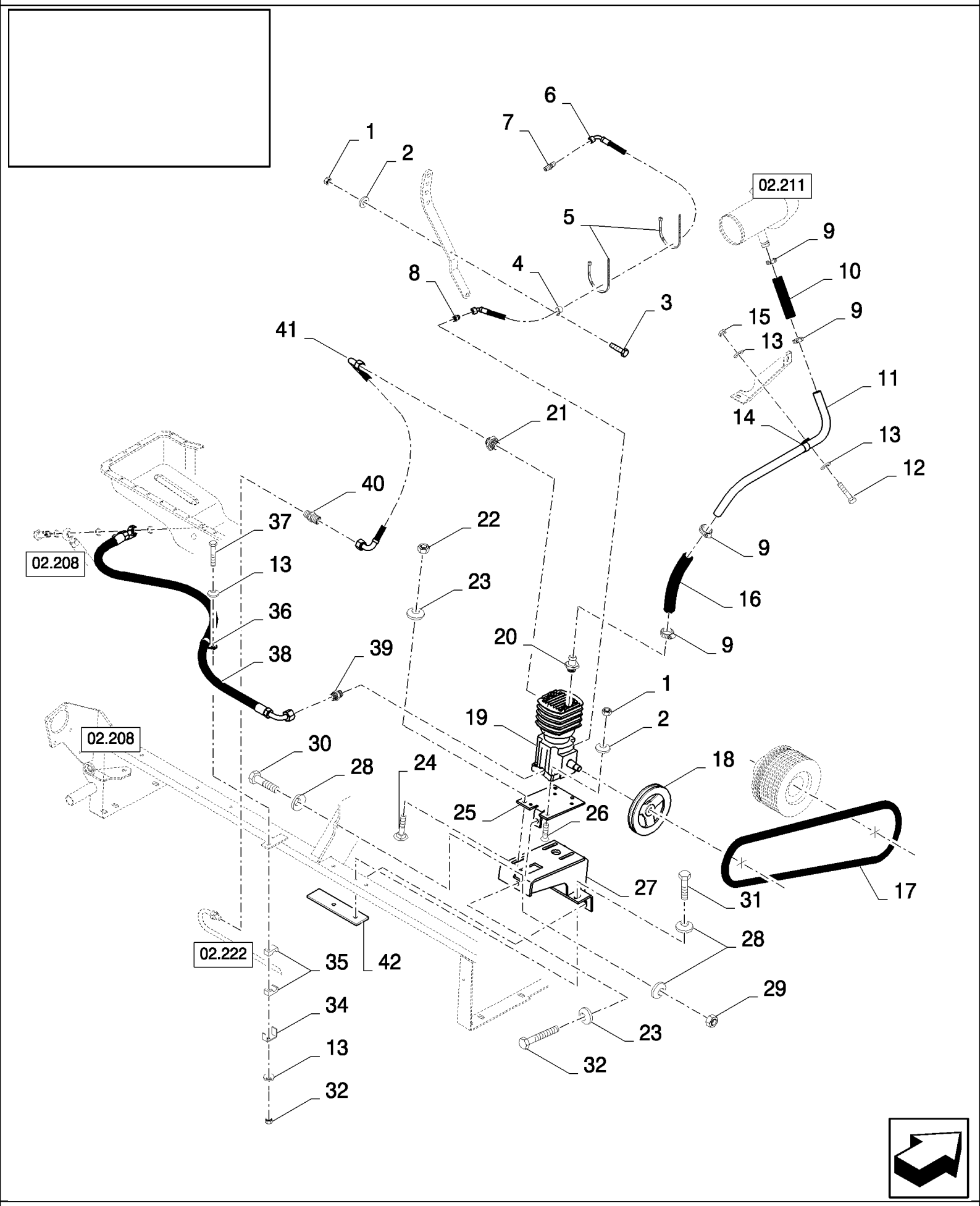

02.221(01) BLOW-OFF SYSTEM, AIR COMPRESSOR

ссылка	Номер детали	Кол-во	Описание
1	89706690	5	NUT, M8, Cl 8,
2	322358	5	WASHER, SPRING, Belleville, M8,
3	120104	1	BOLT, Hex, M8 x 20, 8.8,
4	9839372	1	CLAMP, {PP:89839372}
5	86566989	2	STRAP, CABLE,
6	84069180	1	HOSE, FLEXIBLE,
7	9514575	1	CONNECTOR, HYD., {PP:89514575}
8	443659	1	CONNECTOR, HYD., {PP:80443659}
9	382527	4	CLAMP, HOSE, {PP:80382527}
10	84334169	1	HOSE,
11	84435133	5	TUBE,
12	120100	1	BOLT, Hex, M6 x 20, 8.8,
13	412649	4	WASHER, SPRING, Belleville, M6,
14	9827902	1	CLAMP, {PP:89827902} 1", Insul, 3/8" Bolt,
15	15896221	1	NUT, M6, Cl 10,
16	84437239	1	HOSE,
17	84061465	1	BELT, TRANSMISSION,
18	84071147	1	PULLEY,
19	84041295	1	COMPRESSOR, AIR,
20	84036669	1	CONNECTOR, HYD.,
21	84022667	1	CONNECTOR, HYD., , BSN C479
21	84435826	1	CONNECTOR, HYD., , ASN D480
22	100016	3	NUT, M10, Cl 8,
23	140045	4	WASHER, SPRING, Belleville, M10,
24	86512446	3	BOLT, CARRIAGE, Short NK, M10 x 30, Cl8.8, Full Thd,
25	84069810	1	PLATE,
26	84069530	4	SCREW, Hex Soc Flat Hd, M8 x 40, 8.8,
27	84442877	1	SUPPORT,
28	140046	6	WASHER, SPRING, Belleville, M12,
29	9706685	1	NUT, M12, Cl 8,
30	9706702	1	BOLT, Hex, M12 x 50, 8.8,
31	9706687	4	BOLT, Hex, M12 x 30, 8.8,
32	360296	1	BOLT, Hex, M10 x 100, 8.8, Full Thd, M10x100
33	353308	1	NUT, LOCK, M6 x 1, Cl 8,
34	433100	1	SUPPORT,
35	433007	2	CLAMP,
36	418407	1	CLAMP,
37	120056	1	BOLT, Hex, M6 x 50, 8.8,
38	84069482	1	HOSE, FLEXIBLE,
39	9516263	1	CONNECTOR, HYD.,
40	335174	1	CONNECTOR, HYD.,
41	84038319	1	HOSE, FLEXIBLE,
42	84449185	1	PLATE,

02.222(01) BLOW-OFF SYSTEM, AIR RESERVOIR

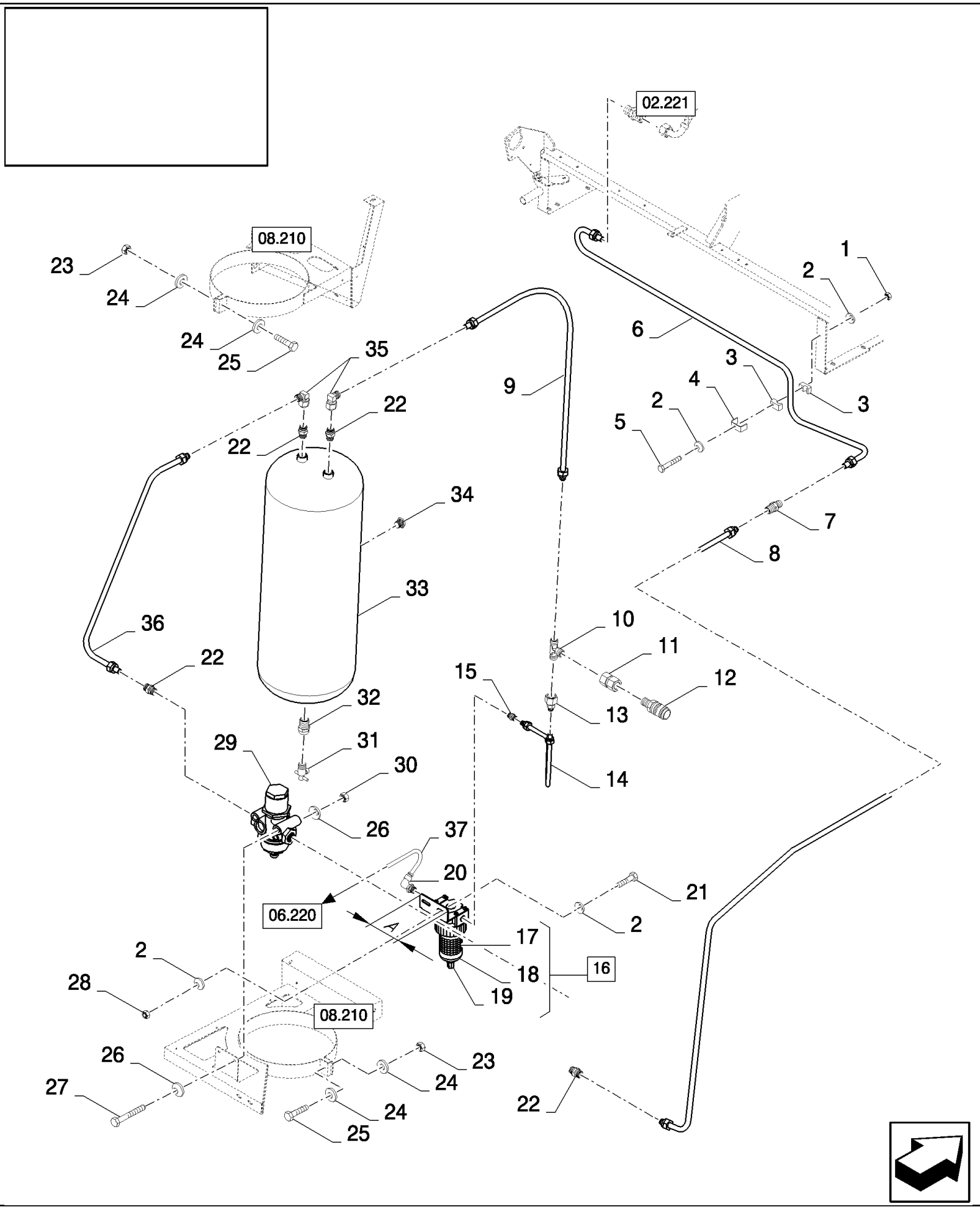

02.222(01) BLOW-OFF SYSTEM, AIR RESERVOIR

ссылка	Номер детали	Кол-во	Описание
1	353308	1	NUT, LOCK, M6 x 1, Cl 8,
2	412649	6	WASHER, SPRING, Belleville, M6,
3	433007	2	CLAMP, {PP:80433007}
4	433100	1	SUPPORT, {PP:80433100}
5	120056	1	BOLT, Hex, M6 x 50, 8.8,
6	84437685	1	TUBE, , FOR CL560 ONLY, FOR CS520, CS540 ONLY
6	84435598	1	TUBE, , FOR CS640, CS660 ONLY
7	335174	1	CONNECTOR, HYD., {PP:80335174}
8	84435582	1	TUBE,
9	84444047	1	TUBE,
10	444325	1	CONNECTION, 3 WAY, {PP:80444325}
11	84433625	1	CONNECTOR, HYD.,
12	84043491	1	COUPLING, QUICK, MALE,
13	84433633	1	CONNECTOR, HYD.,
14	84435528	1	TUBE,
15	385812	1	CONNECTOR, HYD., {PP:80385812}
16	84991068	1	FILTER, (17 to 19)
17	84991070	1	FILTER, ELEMENT, , A=83MM
17	84800598	1	FILTER, ELEMENT, , A=67MM
18	84991071	1	BOWL, FILTER, , A=83MM
18	84800599	1	BOWL, FILTER, , A=67MM
19	84991072	1	FILTER, , A=83MM
19	84800600	1	FILTER, , A=67MM
20	89576721	1	CONNECTOR, HYD.,
21	120100	2	BOLT, Hex, M6 x 20, 8.8,
22	9516263	4	CONNECTOR, HYD., {PP:89516263}
23	86629542	2	NUT, LOCK, M8 x 1.25, Cl 8,
24	140016	4	WASHER, M8 x 16 x 1.6,
25	43129	2	BOLT, Hex, M8 x 40, 8.8,
26	322358	4	WASHER, SPRING, Belleville, M8,
27	43133	2	BOLT, Hex, M8 x 80, 8.8,
28	15896221	2	NUT, M6, Cl 10,
29	466053	1	VALVE, HYDRAULIC, {PP:80466053}
30	89706690	2	NUT, M8, Cl 8,
31	441031	1	DRAINCOCK/TAP, SUPPLY, {PP:80441031}
32	84019122	1	CONNECTOR, HYD.,
33	84036945	1	RESERVOIR, AIR,
34	84814963	1	CONNECTOR, HYD.,
35	84440128	2	CONNECTOR, HYD.,
36	84435421	1	TUBE,
37	84607921	1	HOSE, L:5091MM, FOR CS520, CS540 ONLY
37	84607921	1	HOSE, L:5341MM, FOR CS640, CS660 ONLY, FOR CL560 ONLY

02.223(01) COLD START

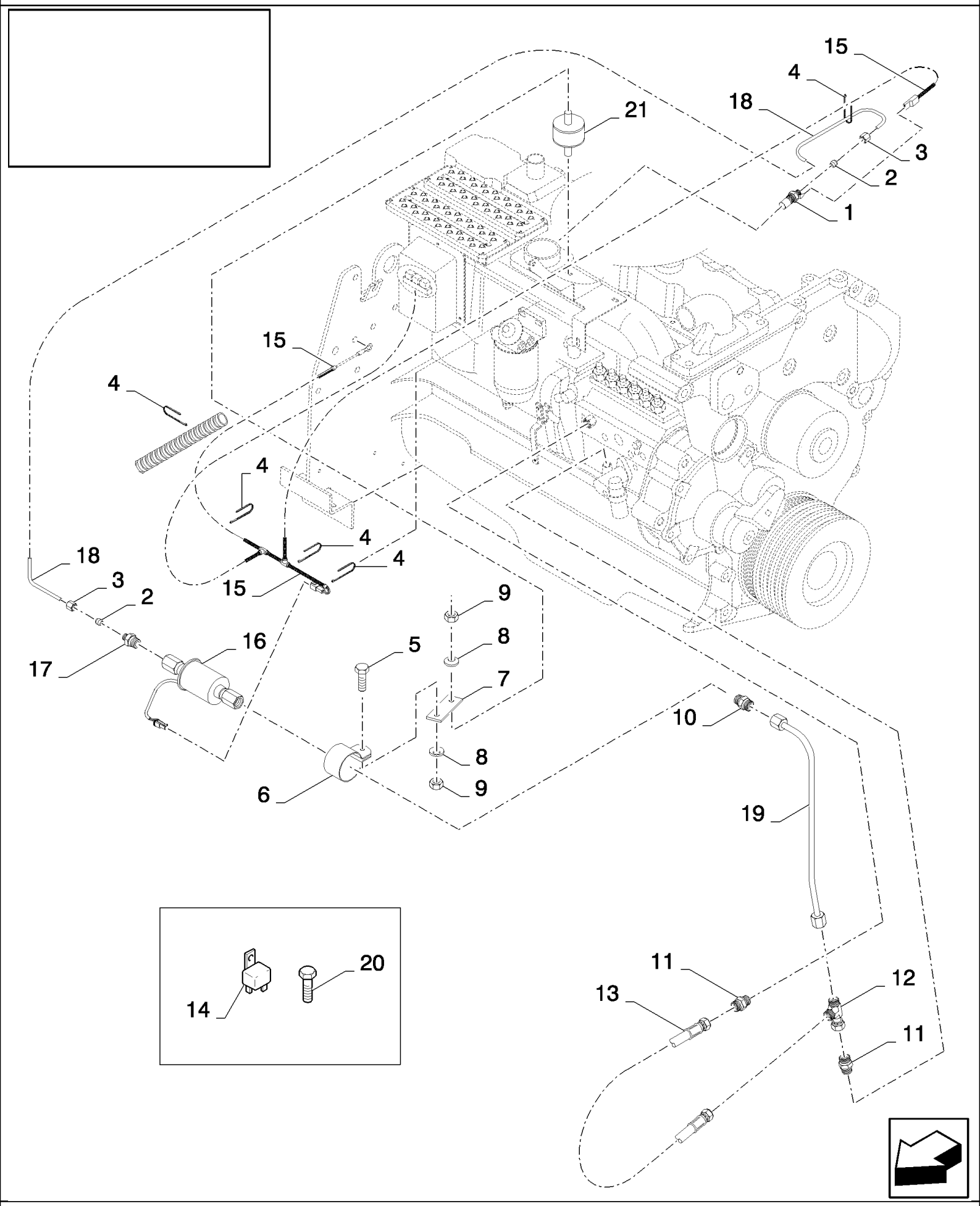

02.223(01) COLD START

ссылка	Номер детали	Кол-во	Описание
1	83956253	1	THERMOSTART, , SEE FIGURE 06.557
2	80381102	2	FERRULE,
3	80381101	2	NUT,
4	323597	5	STRAP, CABLE, {PP:80323597}
5	43127	1	BOLT, Hex, M8 x 25, 8.8,
6	86002637	1	CLAMP,
7	84076803	1	PLATE,
8	322358	4	WASHER, SPRING, Belleville, M8,
9	89706690	4	NUT, M8, Cl 8,
10	84076167	1	CONNECTOR, HYD.,
11	84076168	2	CONNECTOR, HYD.,
12	84064562	1	CONNECTOR, HYD.,
13	84441293	1	HOSE,
14	84000651	1	RELAY,
15	84447204	1	HARNESS, WIRE,
16	86002636	1	PUMP, FUEL,
17	86002635	1	CONNECTOR, HYD.,
18	84441327	1	TUBE,
19	84442807	1	TUBE,
20	86977784	1	SCREW, M8x60
21	84057804	1	DAMPER,

02.224(01) BLOW-OFF SYSTEM, AIR GUN

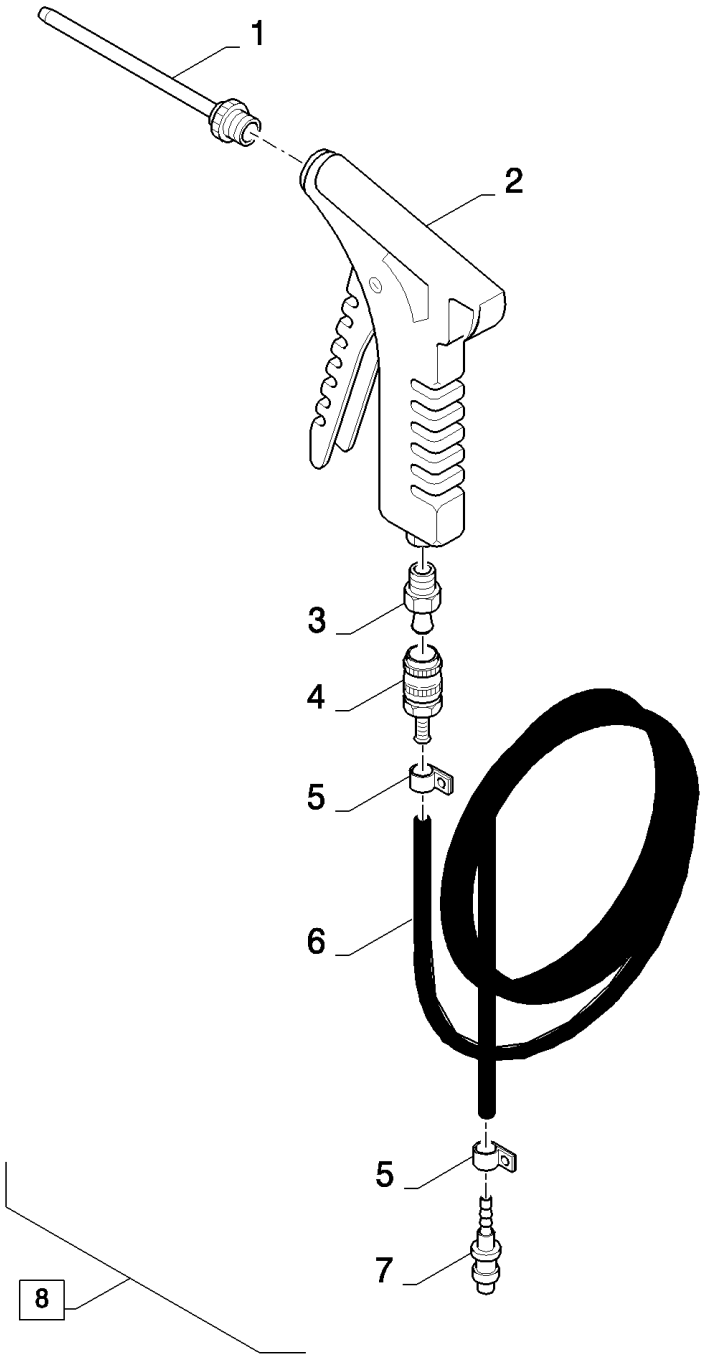

02.224(01) BLOW-OFF SYSTEM, AIR GUN

ссылка	Номер детали	Кол-во	Описание
1	84043496	1	TUBE,
2	84043495	1	AIR GUN,
3	84043494	1	FITTING,
4	84043493	1	COUPLING, QUICK, MALE,
5	80150064	2	CLAMP,
6	84045058	1	HOSE, L:25M
7	84043492	1	FITTING,
8	84045084	1	HOSE, FLEXIBLE, (1 to 7)

02.225(01) COOLERS

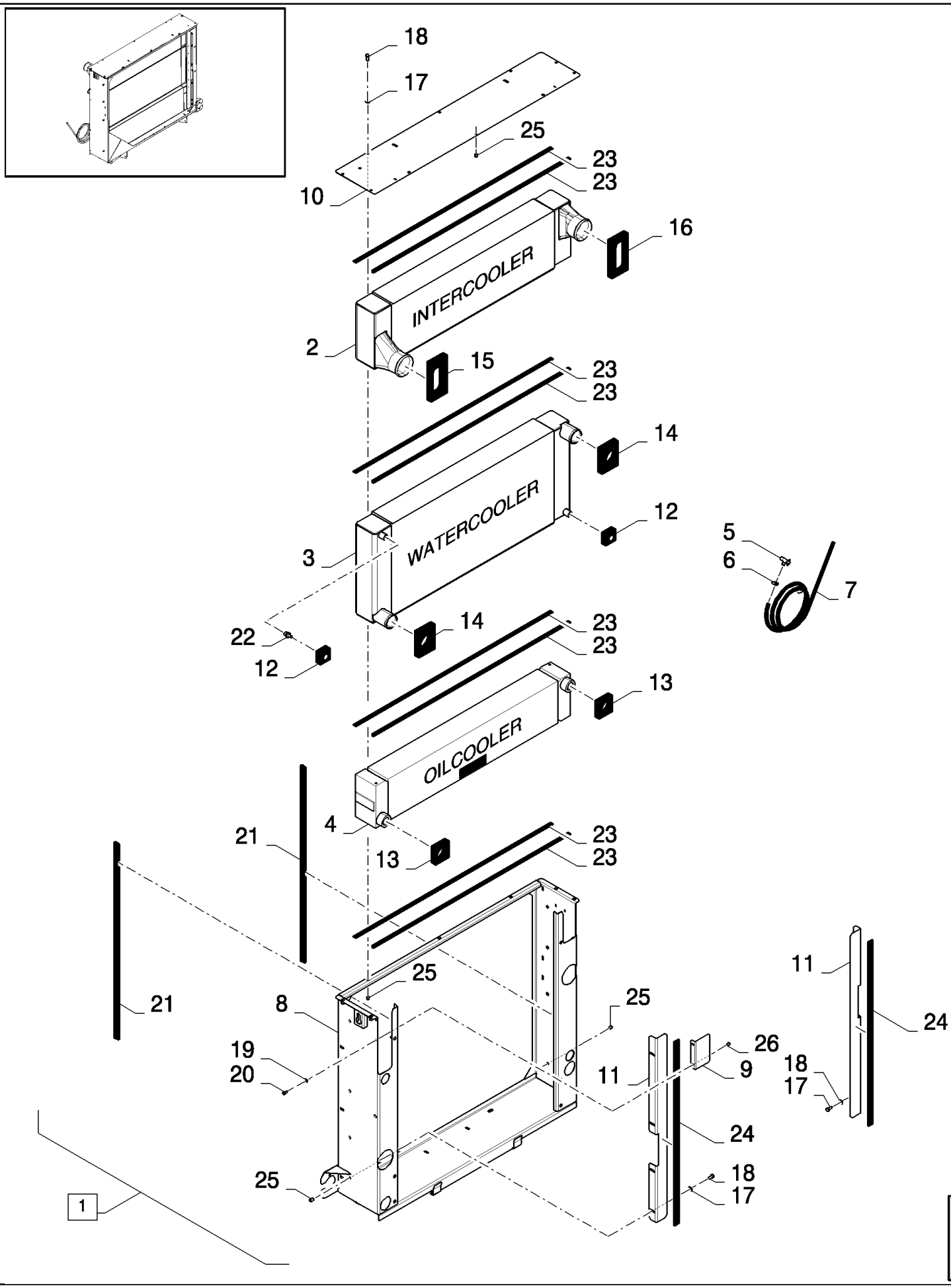

02.225(01) COOLERS

ссылка	Номер детали	Кол-во	Описание
1	84069627	1	RADIATOR, (2 to 7), BSN C375
1	84447293	1	RADIATOR, (2 to 26), ASN D376
2	84072810	1	INTERCOOLER, , BSN C375
2	84452764	1	INTERCOOLER, , ASN D376
3	84072809	1	RADIATOR, , BSN C375
3	84449183	1	RADIATOR, , ASN D376
4	84072811	1	COOLER, OIL, , BSN C375
4	84452765	1	COOLER, OIL, , ASN D376
5	441031	1	DRAINCOCK/TAP, SUPPLY,
6	913888	1	CLAMP, HOSE,
7	80400813	1	HOSE,
8	87319023	1	FRAME,
9	87316857	1	PLATE,
10	87316858	1	PLATE,
11	87324165	2	PLATE,
12	87318590	2	RUBBER,
13	87318582	2	RUBBER,
14	87318587	2	RUBBER,
15	87318589	1	RUBBER,
16	87318588	1	RUBBER,
17	322358	14	WASHER, SPRING, Belleville, M8,
18	120104	14	BOLT, Hex, M8 x 20, 8.8,
19	322357	2	WASHER, SPRING, Belleville, M6,
20	86508568	2	BOLT, Hex, M6 x 16, 8.8,
21	87324720	1	SEAL PROTECTION, L=1.9M
22	80395779	1	
23	80400987	1	SEAL, L=8.8M
24	80401278	1	SEAL, L=1.9M
25	84983188	25	RIVET,
26	84983191	5	RIVET,

CS660 COMBINE BASE UNIT (1/03-) - Transmission

03.000(01) SECTION LIST 3
03.202(01) GEARBOX
03.204(01) GEARBOX, INPUT SHAFT
03.205(01) GEARBOX, DRIVE SHAFT
03.206(01) END REDUCTION 10/75 - 11/111
03.207(01) DIFFERENTIAL LOCK CONTROL
03.208(01) DIFFERENTIAL LOCK CONTROL
03.210(01) GEARBOX, GEARSHIFT CONTROL
03.211(01) GEARBOX, DRIVEN SHAFT
03.212(01) DIFFERENTIAL
03.213(01) BRAKE DISCS - C415 FOR CS520-540
03.214(01) BRAKE CALIBER - C415 FOR CS520-540
03.215(01) GEARSHIFT CONTROL
03.216(01) CIRCUIT FOR HYDRAULIC BRAKES
03.217(01) CIRCUIT FOR HYDRAULIC BRAKES
03.218(01) TRANSMISSION HANDBRAKE
03.219(01) END REDUCTION 11/111
03.220(01) DRIVE SHAFTS WTHOUT EXTENSIONS
03.221(01) BRAKE LIMITER, FOR MAIZE HEADER ONLY

FRONT AXLE	**ESSIEU AVANT**	**EJE DELANTERO**	**FORAKSEL**
ASSALE ANTERIORE	**VORDERACHSE**	**EIXO DIANTIERO**	**VOORAS**

SEC. 4

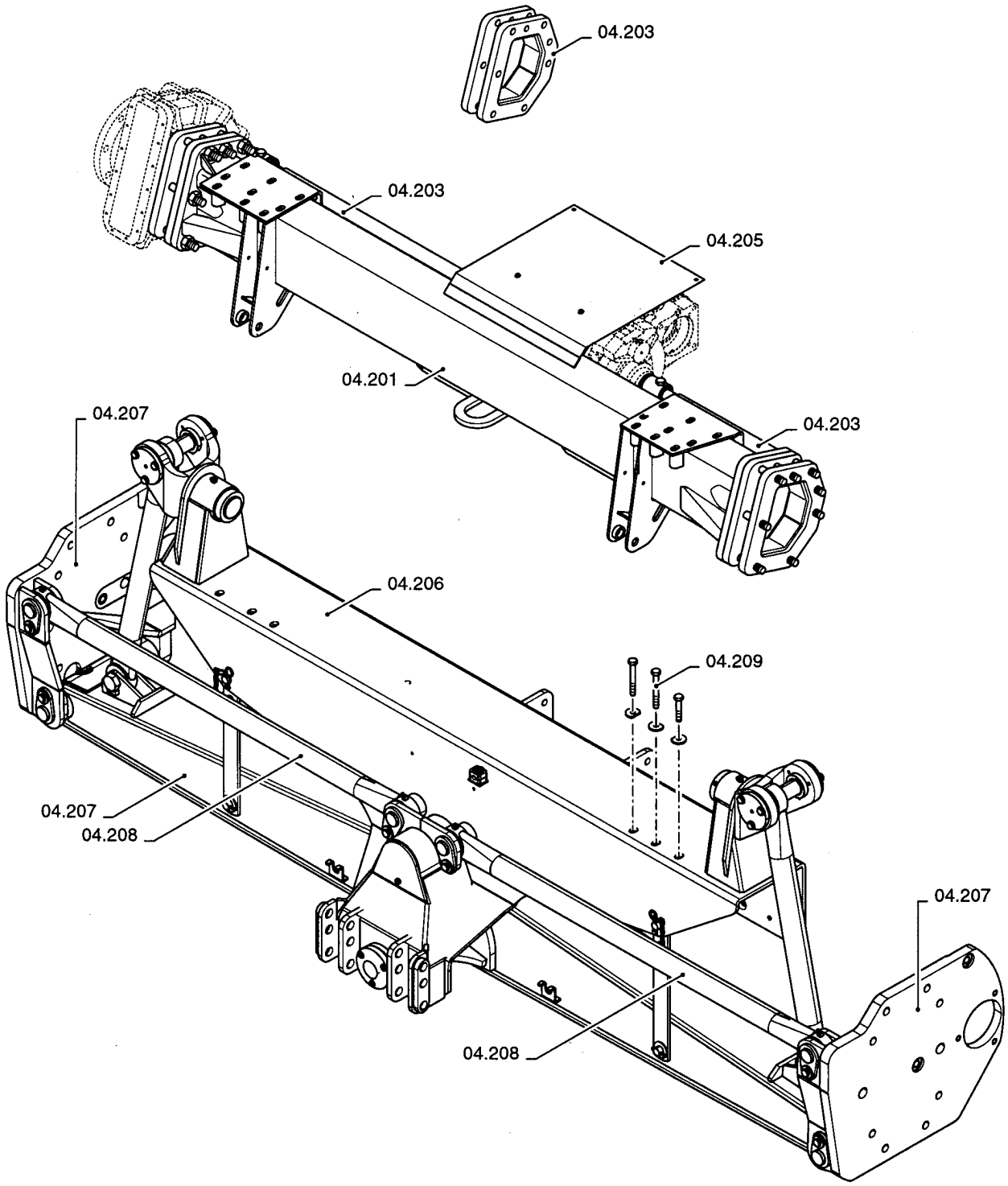

ссылка	Номер детали	Кол-во	Описание

04.201(01) FRONT AXLE

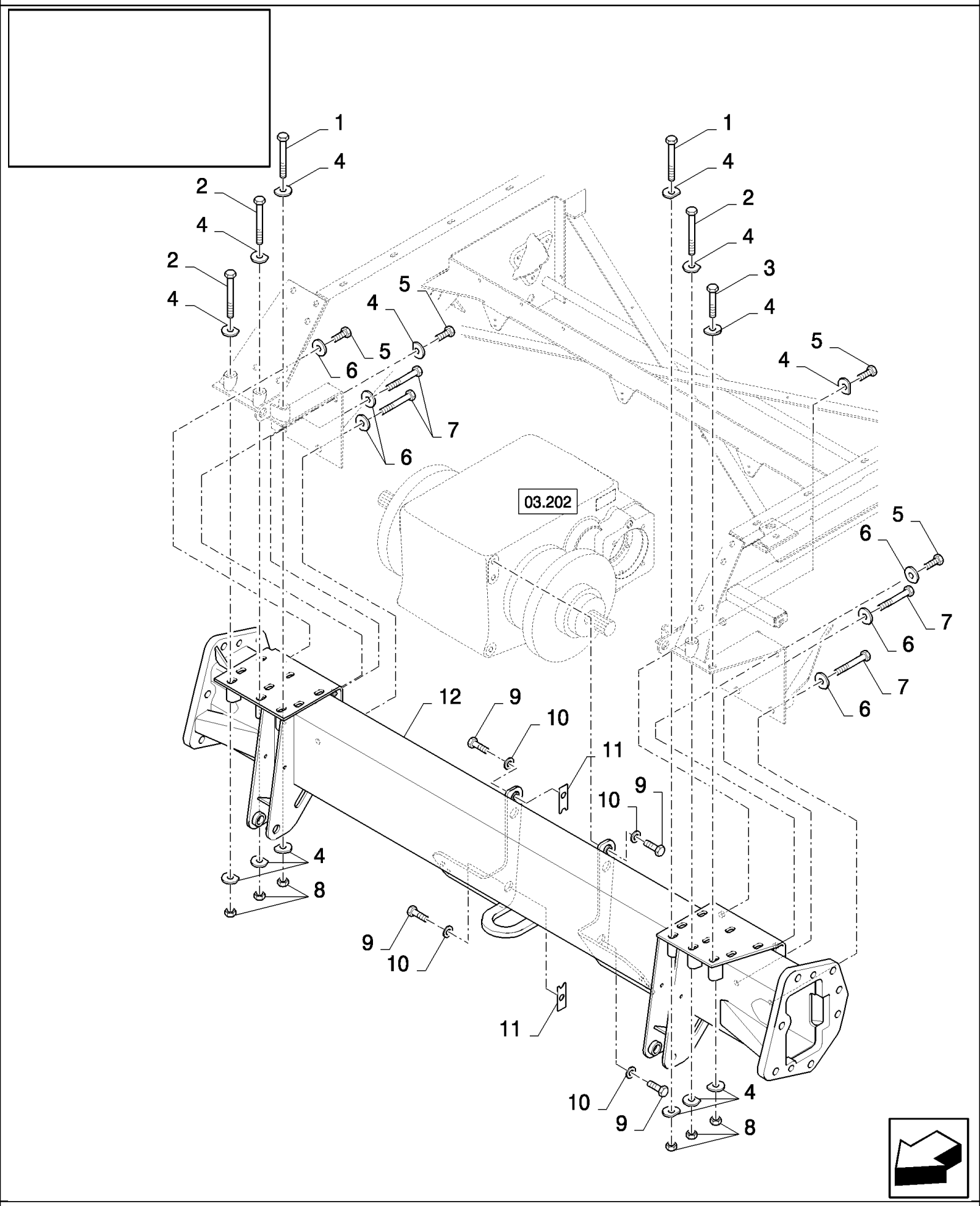

CS660 COMBINE BASE UNIT (1/03-) - Front Axle

04.201(01) FRONT AXLE

ссылка	Номер детали	Кол-во	Описание
1	334967	2	BOLT, {PP:80334967} Hex, M16 x 140, 8.8, M16x140
2	362573	3	BOLT, Hex, M16 x 150, 8.8,
3	374889	1	BOLT, Hex, M16 x 100, 8.8,
4	333041	14	WASHER, {PP:80333041}
5	43168	4	BOLT, Hex, M16 x 40, 8.8,
6	333040	6	WASHER, {PP:80333040}
7	43874	4	BOLT, Hex, M16 x 110, 8.8,
8	100020	6	NUT, M16, Cl 8,
9	120090	6	BOLT, Hex, M16 x 50, 8.8,
10	394631	6	WASHER, {PP:80394631}
11	84073986	2	SHIM,
12	84432076	1	AXLE, FRONT, , FOR CS520, CS540 ONLY, BSN C363
12	84452049	1	CROSSRAIL, , FOR CS520, CS540 ONLY, ASN D364
12	84076524	1	AXLE, FRONT, , FOR CS640 ONLY, BSN C363
12	84452047	1	CROSSRAIL, , FOR CS640 ONLY, ASN D364
12	84441514	1	AXLE, FRONT, , FOR CS660 ONLY, BSN C375
12	84454953	1	AXLE, FRONT, , FOR CS660 ONLY, ASN D376

04.203(01) EXTENSIONS

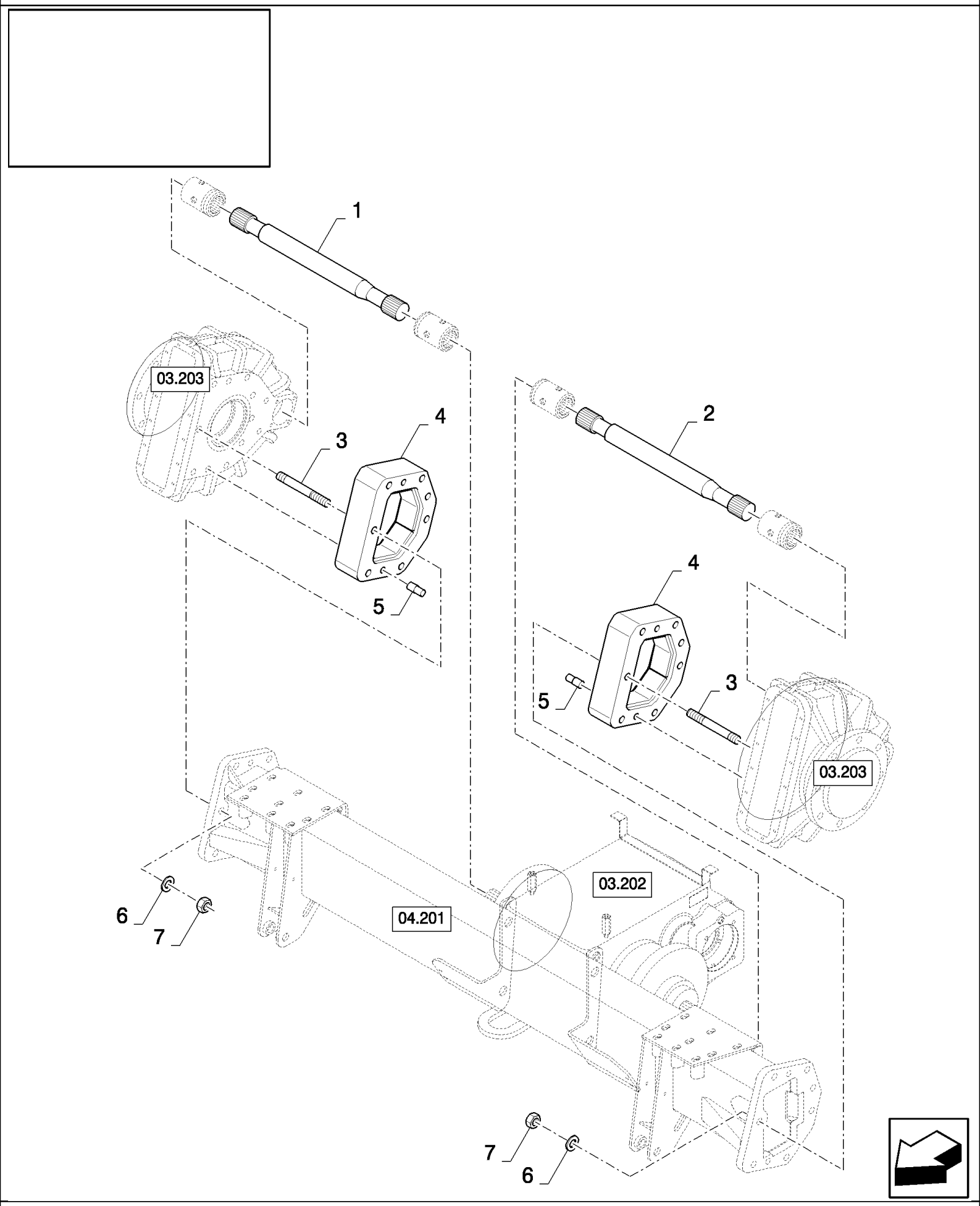

CS660 COMBINE BASE UNIT (1/03-) - Front Axle

04.203(01) EXTENSIONS

ссылка	Номер детали	Кол-во	Описание
1	84607993	1	SHAFT, CONTROL, , FOR CS540 ONLY, BSN C259
1	84448873	1	SHAFT, CONTROL, , FOR CS540 ONLY, ASN D260
1	84438867	1	, FOR CS640 ONLY, BSN C259
1	84448877	1	SHAFT, CONTROL, , FOR CS640 ONLY, ASN D260
1	84449075	1	SHAFT, CONTROL, , FOR CS660 ONLY
2	84438856	1	, BSN C259
2	84448875	1	SHAFT, CONTROL, , FOR CS540, CS640 ONLY, ASN D260
2	84449072	1	SHAFT, CONTROL, , FOR CS660 ONLY
3	84437770	14	STUD, , BSN C259
3	84448850	14	STUD, , FOR CS540, CS640 ONLY, ASN D260
3	84448850	16	STUD, , FOR CS660 ONLY
4	84438783	2	, BSN C259
4	84448837	2	EXTENSION, , FOR CS540, CS640 ONLY, ASN D260
4	84448890	2	EXTENSION, , FOR CS660 ONLY
5	84437892	4	PIN, , FOR CS540, CS640 ONLY
5	84448920	4	PIN, , FOR CS660 ONLY
6	394632	AR	WASHER, M20 x 40 x 4, HT,
7	9847024	AR	NUT, M20, Cl 10,

04.205(01) GEARBOX AND BRAKE PROTECTIONS

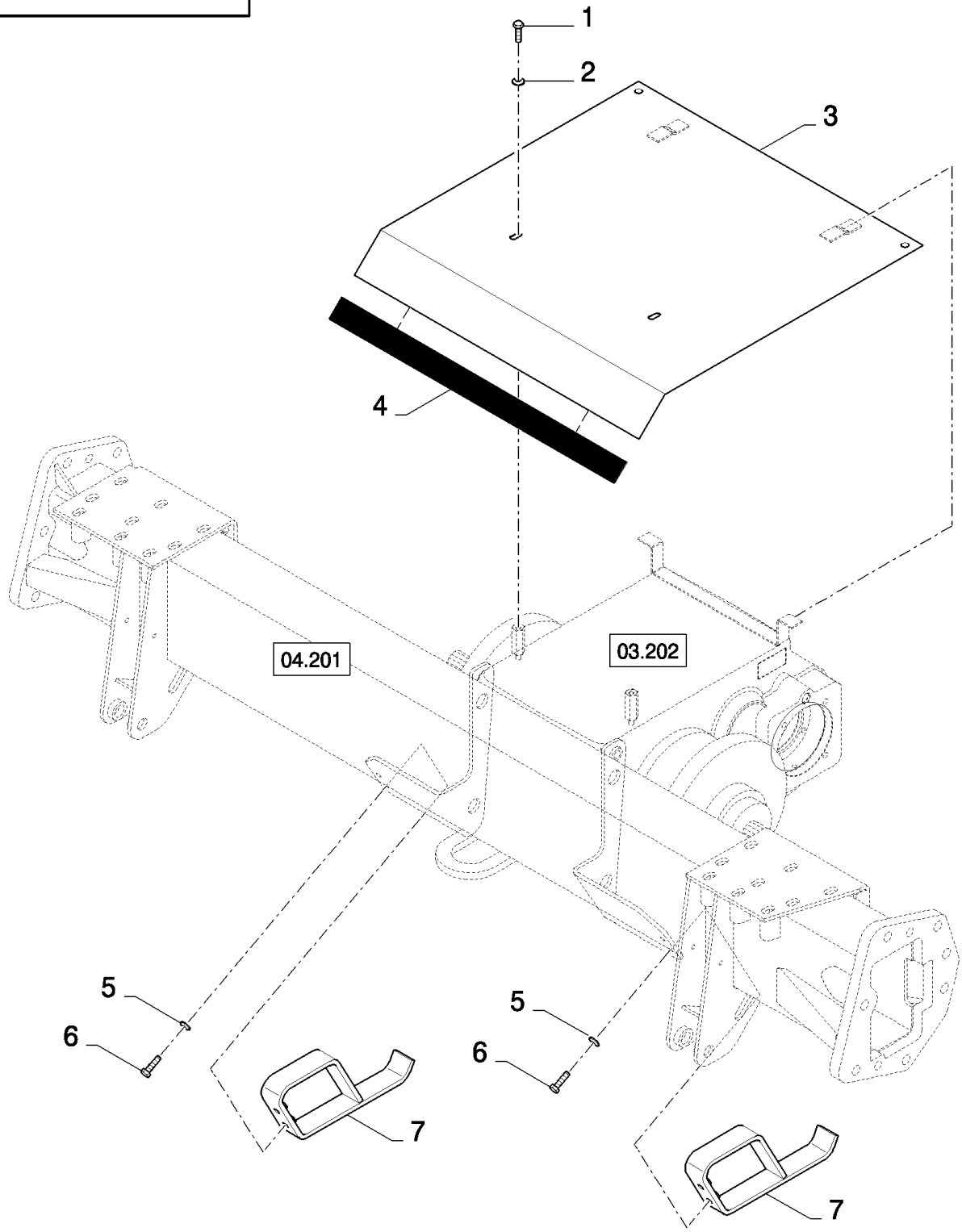

04.205(01) GEARBOX AND BRAKE PROTECTIONS

ссылка	Номер детали	Кол-во	Описание
2	412650	2	WASHER, SPRING, Belleville, M8,
3	84433243	1	SHIELD,
4	NS	AR	NOT SERVICED, L=0.64M
5	140045	4	WASHER, SPRING, Belleville, M10,
6	43140	4	BOLT, Hex, M10 x 30, 8.8, Full Thd,
7	84075443	2	SUPPORT,
1	16043224	2	BOLT, Hex, M8 x 16, 8.8, Full Thd,

REAR AXLE	**ESSIEU POSTÉRIEUR**	**EJE POSTERIOR**	**MANCANTE**
ASSALE POSTERIORE	**HINTERACHSE**	**PONTE TRASEIRO**	**ACHTERAS**

SEC. 5

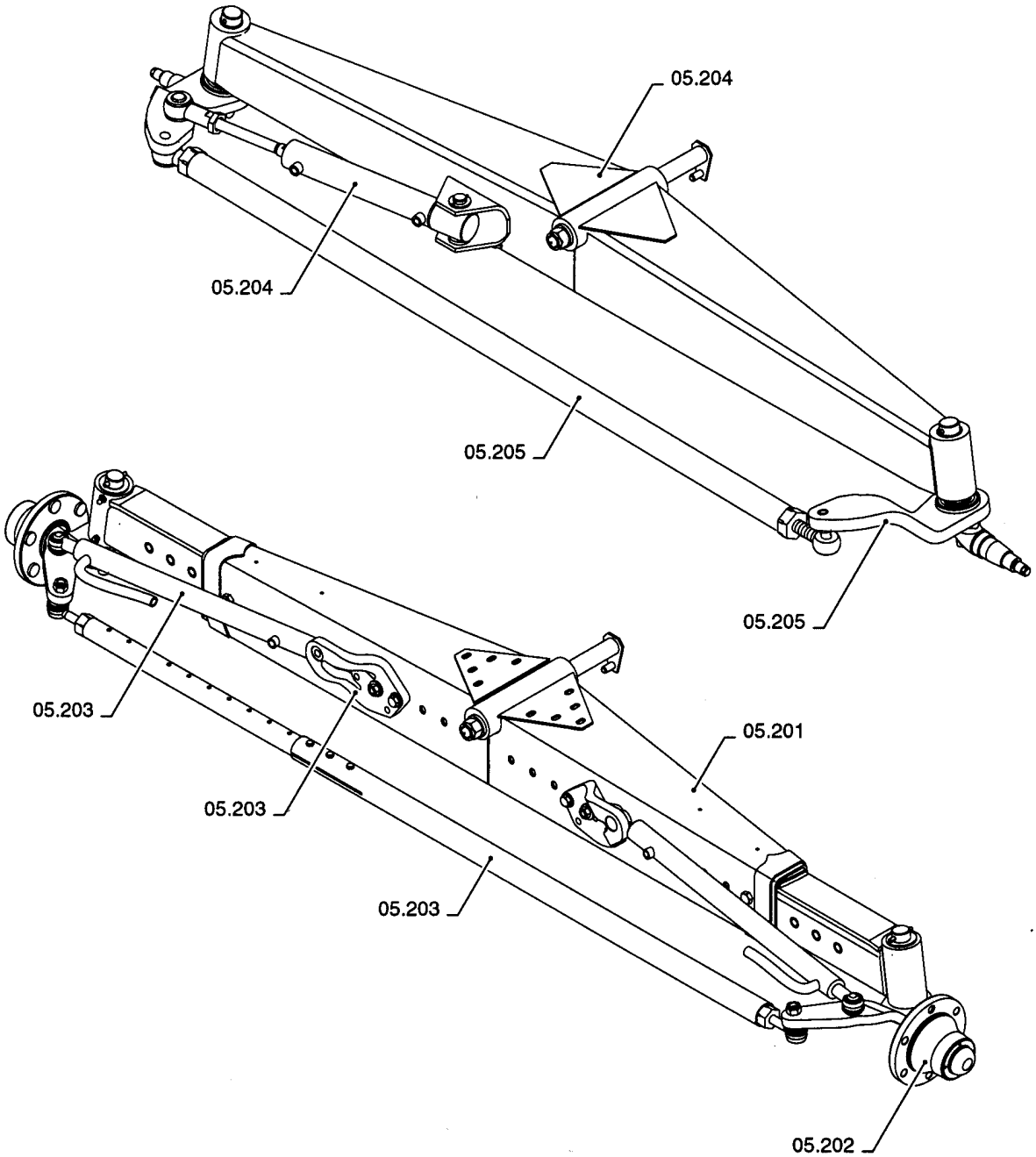

ссылка	Номер детали	Кол-во	Описание

REAR AXLE	**ESSIEU POSTÉRIEUR**	**EJE POSTERIOR**	**MANCANTE**
ASSALE POSTERIORE	**HINTERACHSE**	**PONTE TRASEIRO**	**ACHTERAS**

SEC. 5

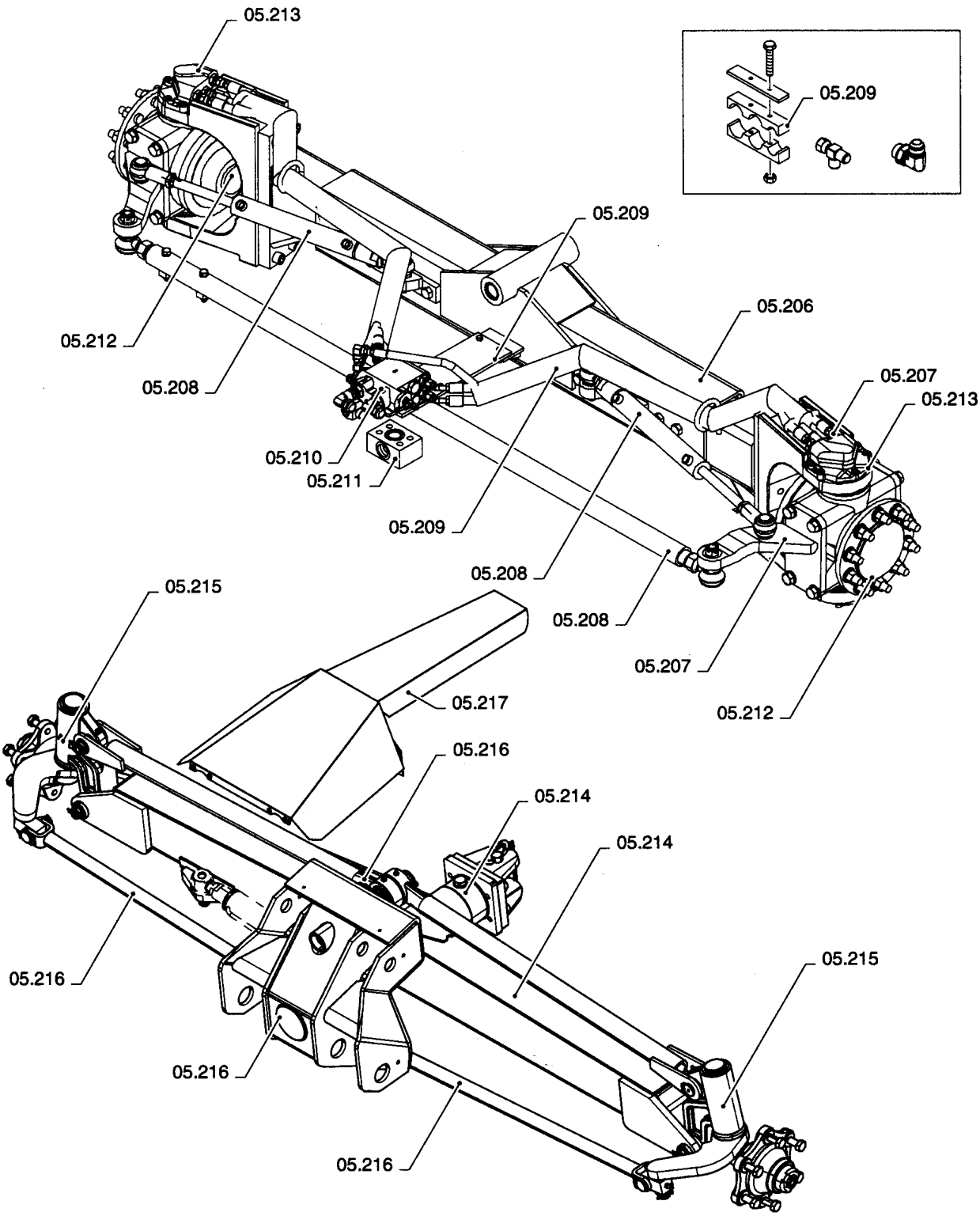

ссылка	Номер детали	Кол-во	Описание

05.201(01) ADJUSTABLE STEERING AXLE

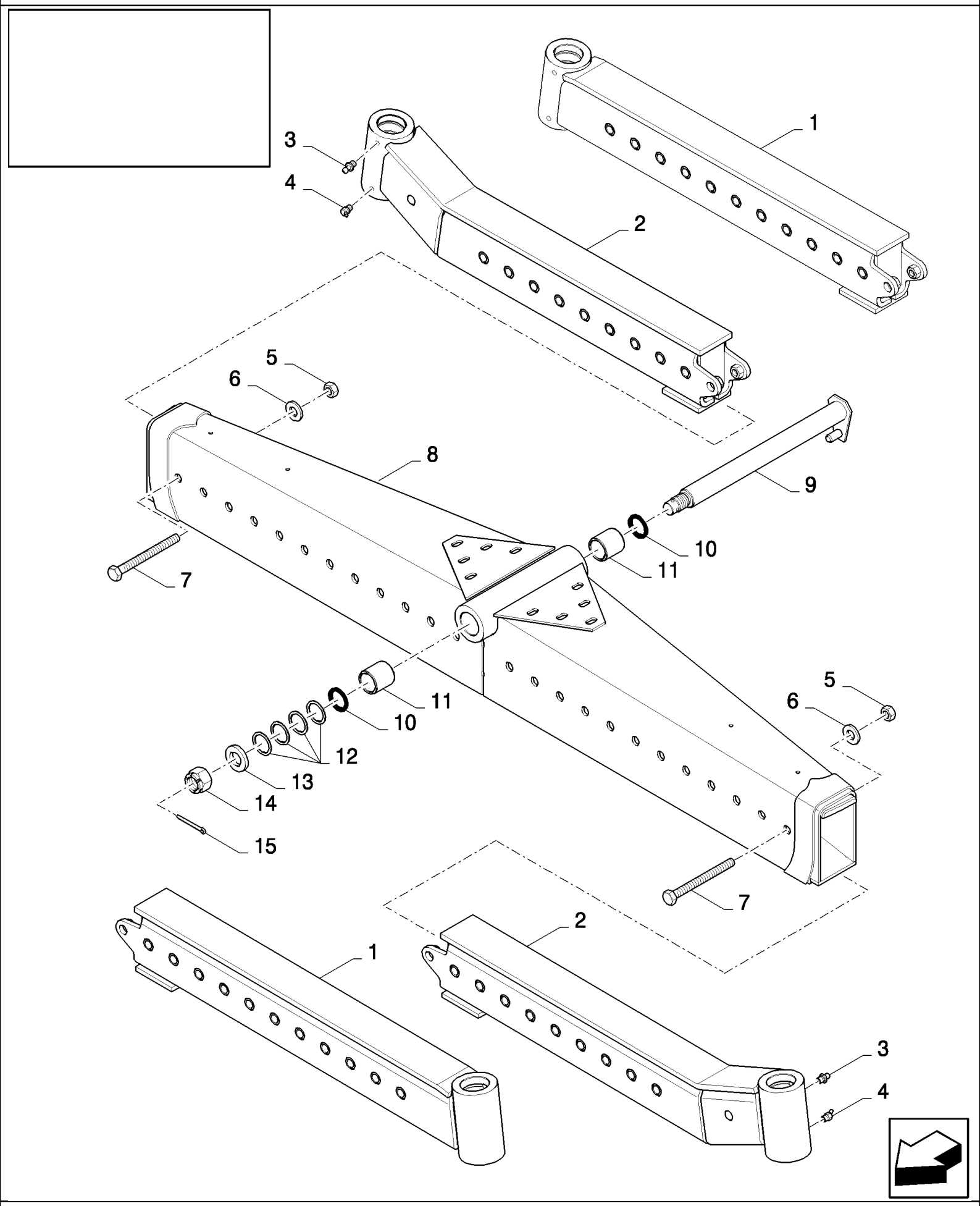

05.201(01) ADJUSTABLE STEERING AXLE

ссылка	Номер детали	Кол-во	Описание
1	84439405	2	EXTENSION, , FOR LOW CENTER ONLY
2	84439106	2	EXTENSION, , FOR HIGH CENTER ONLY
3	150021	2	NIPPLE, LUBE, {PP:80150021}
4	150023	2	NIPPLE, LUBE, {PP:80150023}
5	392530	2	NUT, M16, Cl 10,
6	394631	2	WASHER, {PP:80394631}
7	392531	2	BOLT, {PP:80392531} Hex, M16 x 130, 10.9, M16x130
8	84439301	1	AXLE, REAR,
9	84077850	1	SHAFT,
10	84078068	2	RING, OIL SCRAPER,
11	84439254	2	SLEEVE,
12	140124	AR	PLATE, ADJUSTING, {PP:80140124}
13	84334054	1	WASHER, 31MM
14	390822	1	NUT, SLOTTED, {PP:80390822} M30 x 1.5, Cl 8, M30x1.5
15	130016	1	PIN, SPLIT (COTTER), {PP:80130016} M6.3 x 63,

05.202(01) WHEEL HUBS

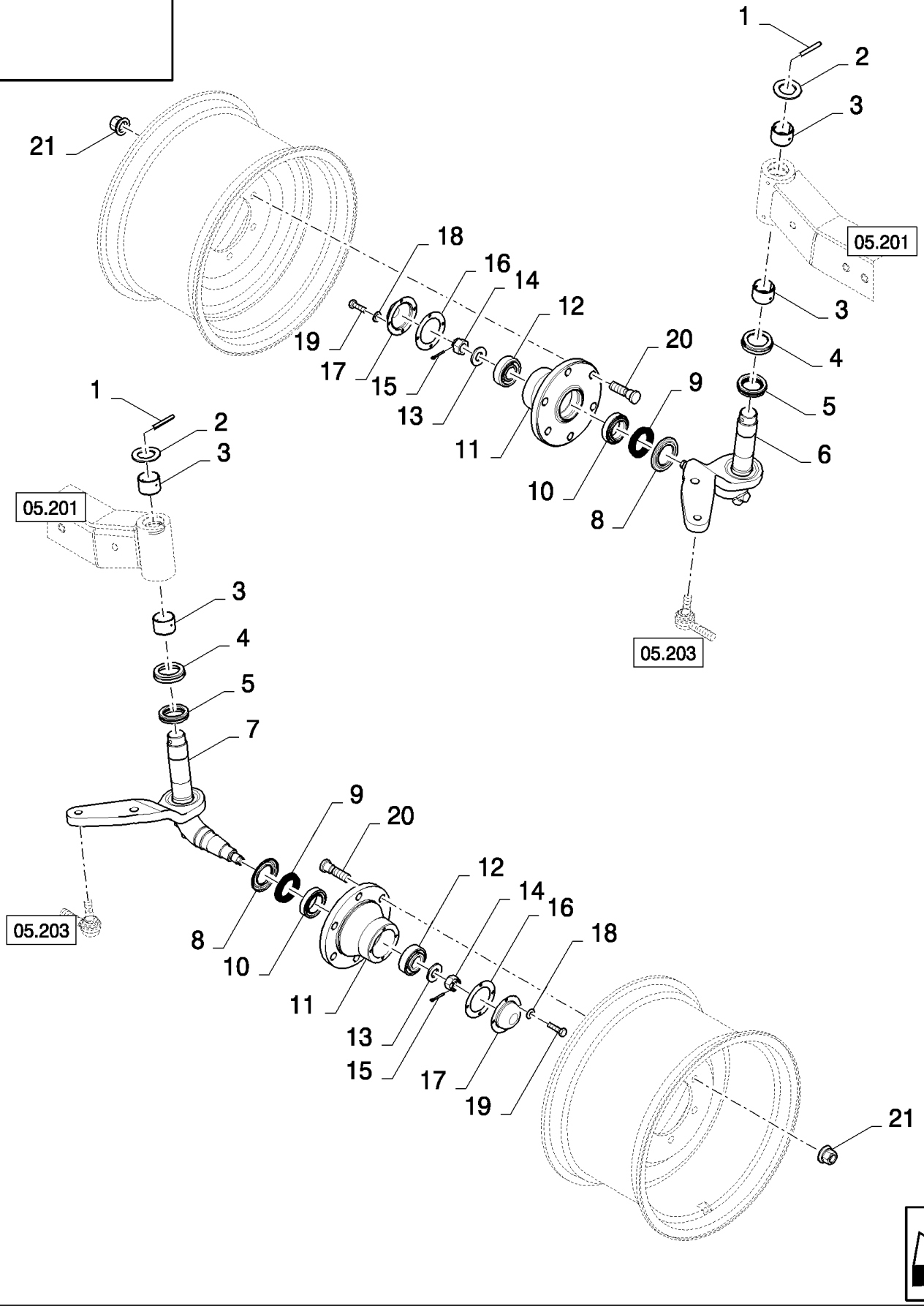

CS660 COMBINE BASE UNIT (1/03-) - Rear Axle

05.202(01) WHEEL HUBS

ссылка	Номер детали	Кол-во	Описание
1	62218	2	PIN, LOCK, {PP:80062218} M10 x 75, Slotted,
2	84814169	2	WASHER, LOCK,
3	84062271	4	BUSHING,
4	357732	2	BEARING, ROLLER CAGE, {PP:80357732}
5	301202	2	BEARING ASSY, {PP:80301202}
6	84444744	1	SPINDLE, , BSN C323
6	84448833	1	SPINDLE, , ASN D324
7	84444743	1	SPINDLE, , BSN C323
7	84448832	1	SPINDLE, , ASN D324
8	357733	2	CAP, FLANGE COVER, {PP:80357733}
9	357240	2	ELEMENT, SEALING, {PP:80357240}
10	357239	2	BEARING ASSY, {PP:80357239}
11	84058648	2	HUB,
12	9817852	2	BEARING ASSY, {PP:89817852}
13	304060	2	WASHER, {PP:80304060}
14	309090	2	NUT, SLOTTED, {PP:80309090} M24 x 1.5, Cl 8, M24x1.5
15	130011	2	PIN, SPLIT (COTTER), {PP:80130011} M5 x 40,
16	743583	2	GASKET, {PP:80743583}
17	743581	2	COVER, {PP:80743581}
18	322357	8	WASHER, SPRING, Belleville, M6,
19	86508568	8	BOLT, Hex, M6 x 16, 8.8,
20	418817	12	BOLT, {PP:80418817}
21	748960	12	NUT, {PP:80748960} M18x1.5

05.203(01) ADJUSTABLE STEERING AXLE AND CYLINDERS

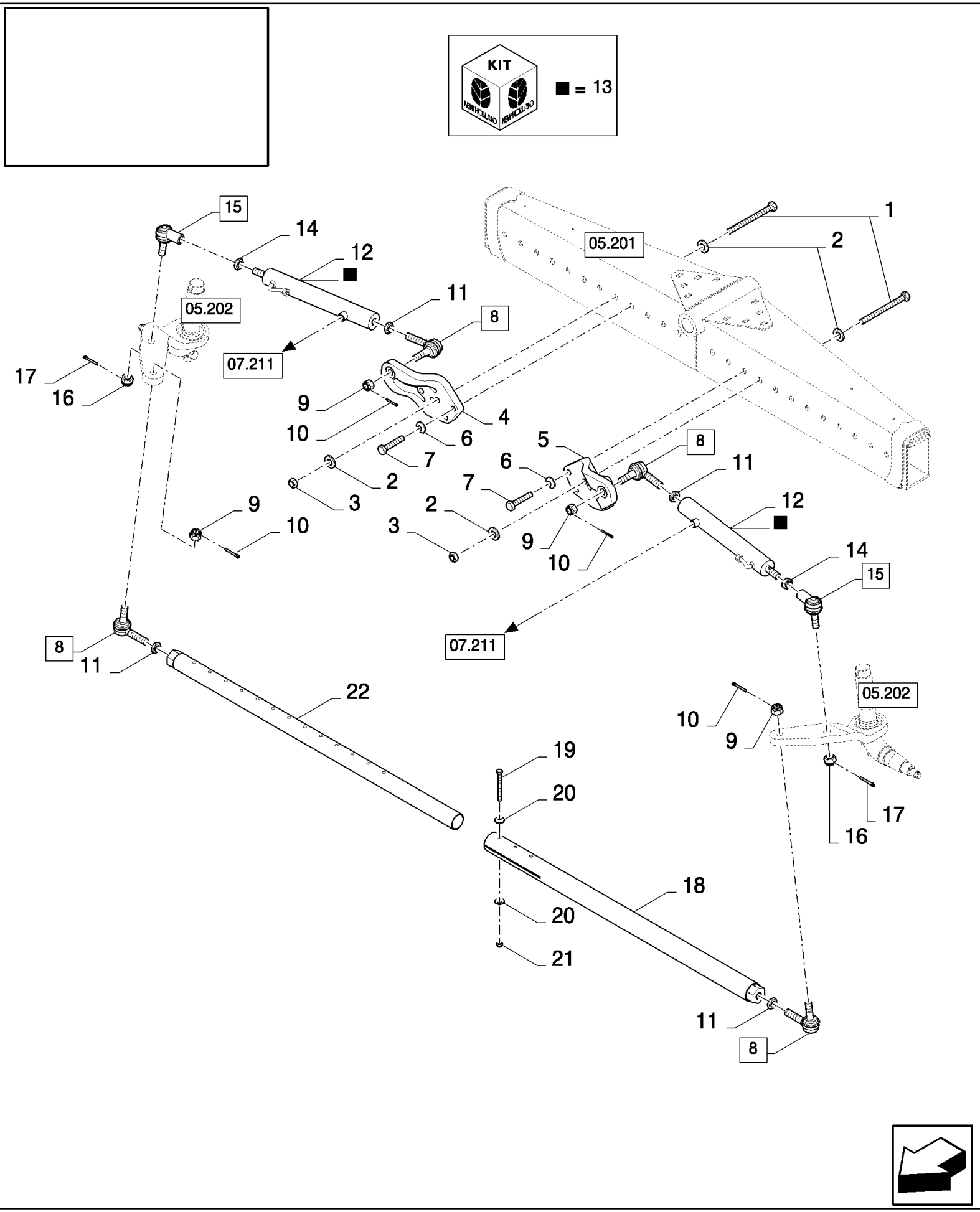

CS660 COMBINE BASE UNIT (1/03-) - Rear Axle

05.203(01) ADJUSTABLE STEERING AXLE AND CYLINDERS

ссылка	Номер детали	Кол-во	Описание
1	84439252	4	BOLT, Hex, M16 x 150, 10.9, M16x150
2	394631	8	WASHER, {PP:80394631}
3	392530	4	NUT, M16, Cl 10,
4	84439012	1	SUPPORT, RH
5	84439011	1	SUPPORT, LH
6	140048	2	WASHER, SPRING, Belleville, M16,
7	120091	2	BOLT, Hex, M16 x 60, 8.8,
8	84440541	4	BALL JOINT, (9,10)
9	NSS	4	NOT SERVICED SEPARATELY,
10	NSS	4	NOT SERVICED SEPARATELY,
11	331209	4	NUT, {PP:80331209} 13/16"-16, G2,
12	84440415	2	HYDRAULIC CYLINDER, (13)
13	84026019	2	KIT, SEALS,
14	320771	2	NUT, Thin, M20 x 1.5, Cl 04,
15	84039559	2	BALL JOINT, (16,17)
16	NSS	2	NOT SERVICED SEPARATELY,
17	NSS	2	NOT SERVICED SEPARATELY,
18	84439201	1	TRACK ROD ASSY,
19	120073	3	BOLT, Hex, M10 x 80, 8.8,
20	379401	6	CLAMP, {PP:80379401}
21	412141	3	NUT, LOCK, {PP:80412141} M10 x 1.5, Cl 8,
22	84439211	1	TRACK ROD ASSY,

05.206(01) POWERED REAR AXLE

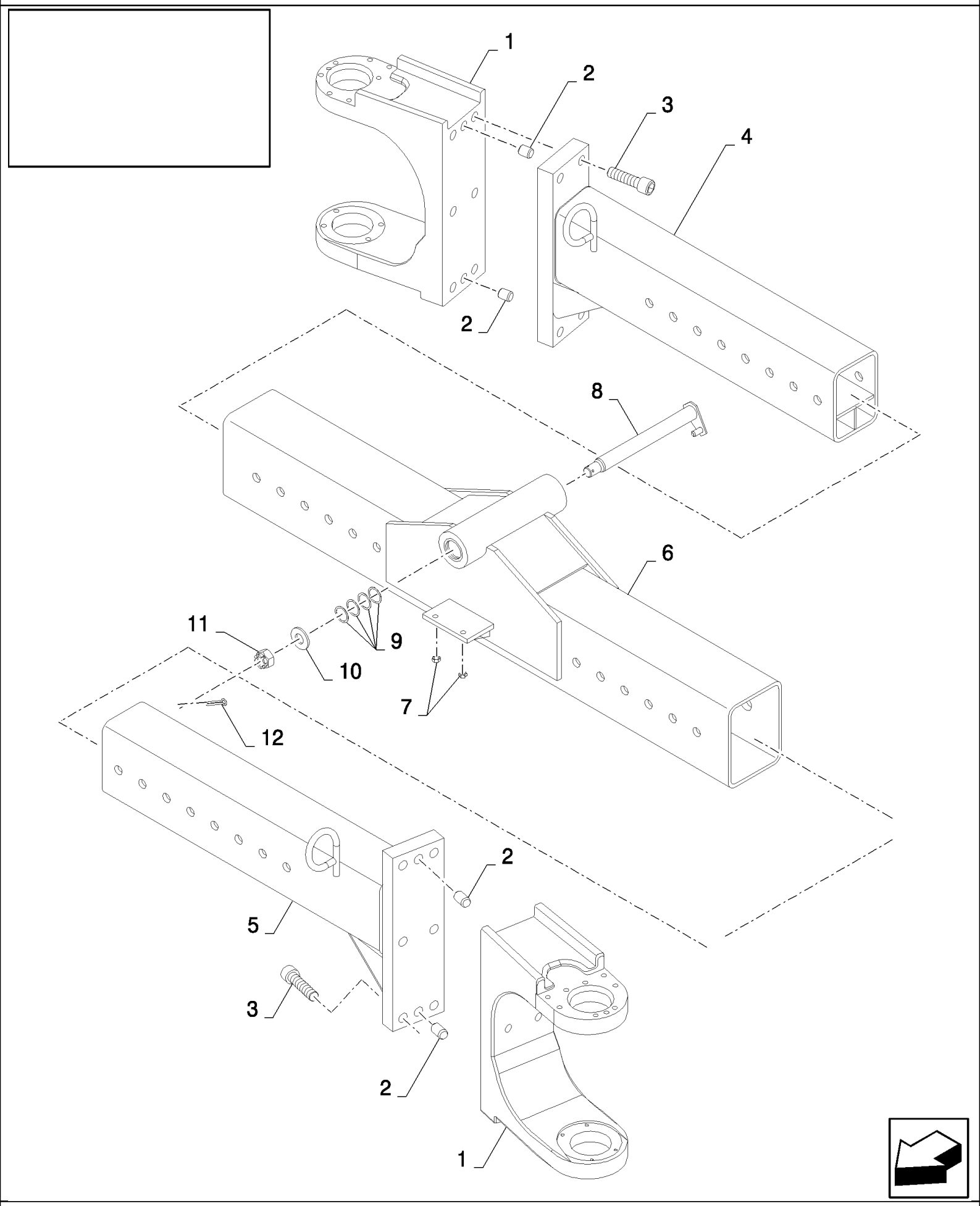

CS660 COMBINE BASE UNIT (1/03-) - Rear Axle

05.206(01) POWERED REAR AXLE

ссылка	Номер детали	Кол-во	Описание
1	84800174	2	FRAME,
2	84800176	4	PIN,
3	87301555	8	SCREW, Hex Soc Hd, M20 x 80, 12.9, M20x80
4	84800171	1	AXLE, REAR, RH
5	84800170	1	AXLE, REAR, LH
6	84800169	1	AXLE, REAR,
7	9837692	2	CLAMP, {PP:89837692}
8	84077850	1	SHAFT,
9	140124	4	PLATE, ADJUSTING,
10	84334054	1	WASHER,
11	390822	1	NUT, SLOTTED, M30 x 1.5, Cl 8,
12	130016	1	PIN, SPLIT (COTTER), M6.3 x 63,

05.207(01) POWERED REAR AXLE : WHEEL DRIVE

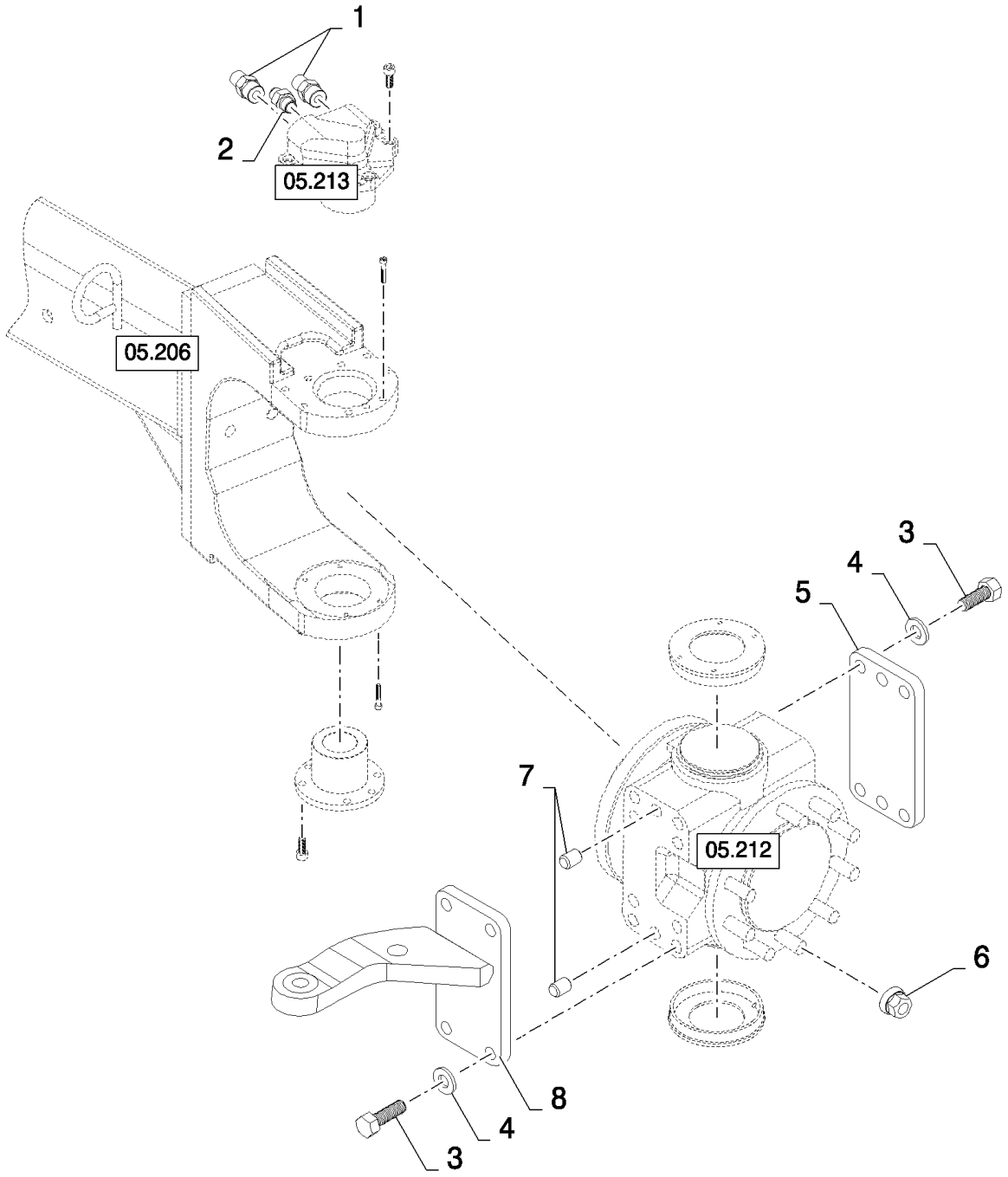

05.207(01) POWERED REAR AXLE : WHEEL DRIVE

ссылка	Номер детали	Кол-во	Описание
1	176081	4	CONNECTOR, HYD., {PP:80176081} 3/4"-16, 37є x 1 1/16"-12, O-Ring,
2	128818	2	CONNECTOR, HYD., {PP:80128818} 3/4"-16, 37є x 3/4"-16, O-Ring,
3	9512573	16	BOLT, Hex, M20 x 40, 10.9,
4	578092	16	WASHER, {PP:80578092}
5	84800178	2	PLATE, MOUNTING,
6	9512180	20	NUT, {PP:89512180} M20
7	84800176	4	PIN,
8	84800179	1	BRACKET, LH
8	84800180	1	BRACKET, RH

05.208(01) POWERED REAR AXLE

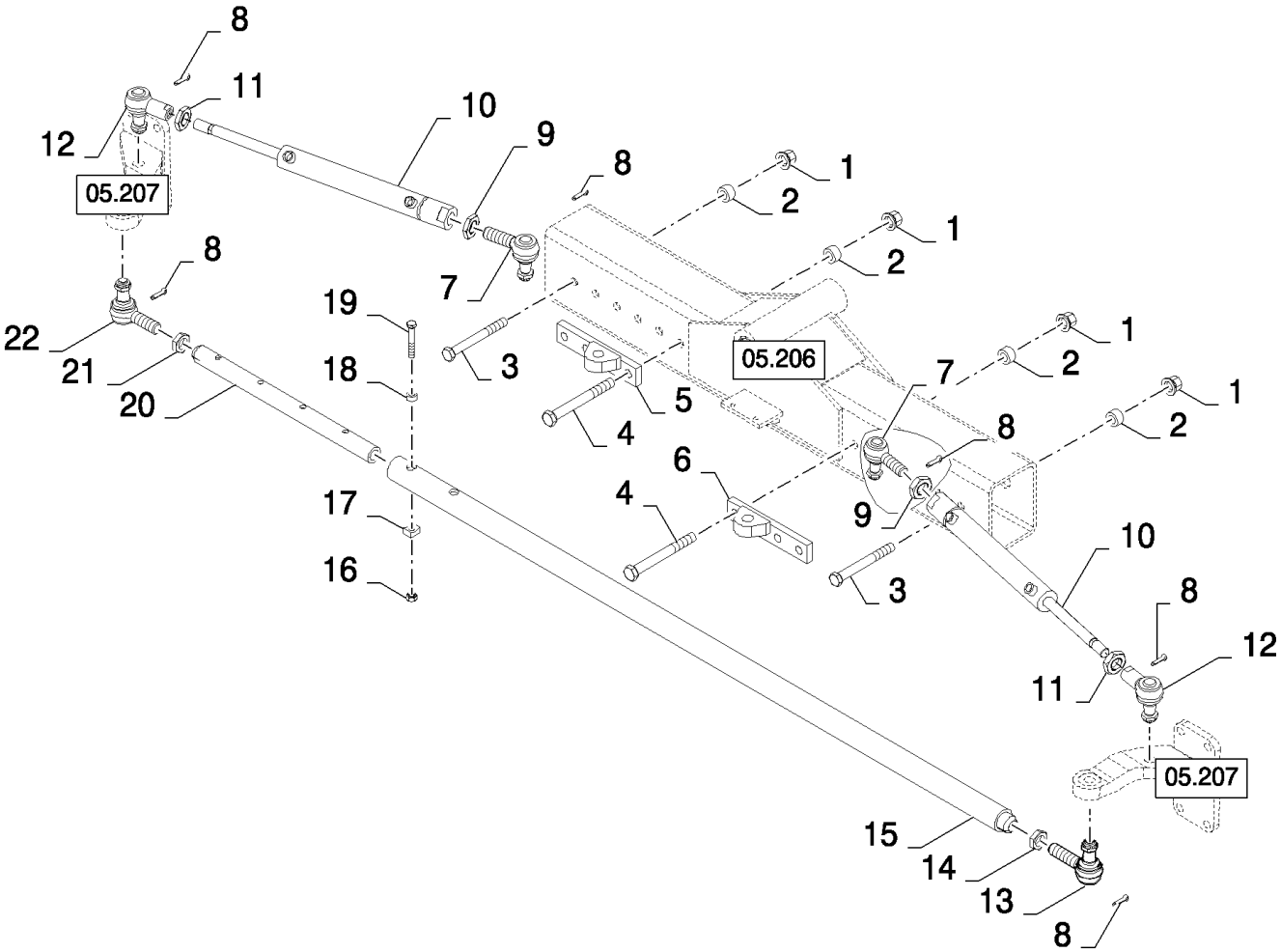

CS660 COMBINE BASE UNIT (1/03-) - Rear Axle

05.208(01) POWERED REAR AXLE

ссылка	Номер детали	Кол-во	Описание
1	280375	10	NUT, LOCK, {PP:80280375} 3/4"-10, GC,
2	9512203	10	WASHER, {PP:89512203}
3	9846394	4	BOLT, {PP:89846394} Hex, 3/4"-10 x 7", G8,
4	9512205	6	SCREW, {PP:89512205}
5	84800172	1	BRACKET, RH
6	84800173	1	BRACKET, LH
7	84800184	2	BALL JOINT,
8	300401	6	PIN, SPLIT (COTTER), {PP:80300401} M2 x 40,
9	100034	2	NUT, M30 x 1.5, Cl 8,
10	84800185	2	CYLINDER STEERING,
11	100033	2	NUT, Thin, M24 x 1.5, Cl 04,
12	84800183	2	BALL JOINT,
13	9818615	1	BALL JOINT, {PP:89818615}
14	9818616	1	NUT, {PP:89818616}
15	84800182	1	TIE-ROD,
16	88871	2	NUT, LOCK, {PP:80088871} 1/2"-13, GC,
17	627347	2	CLAMP, {PP:80627347}
18	9512175	2	SPACER, {PP:89512175}
19	9818286	2	BOLT, {PP:89818286} Hex, 1/2"-13 x 3 1/2", G8,
20	84800181	1	TIE-ROD,
21	87319	1	NUT, {PP:80087319} Jam, 1 1/8"-12, G2,
22	677952	1	BALL JOINT, {PP:80677952}

05.209(01) ADDITIONAL PARTS, POWERED

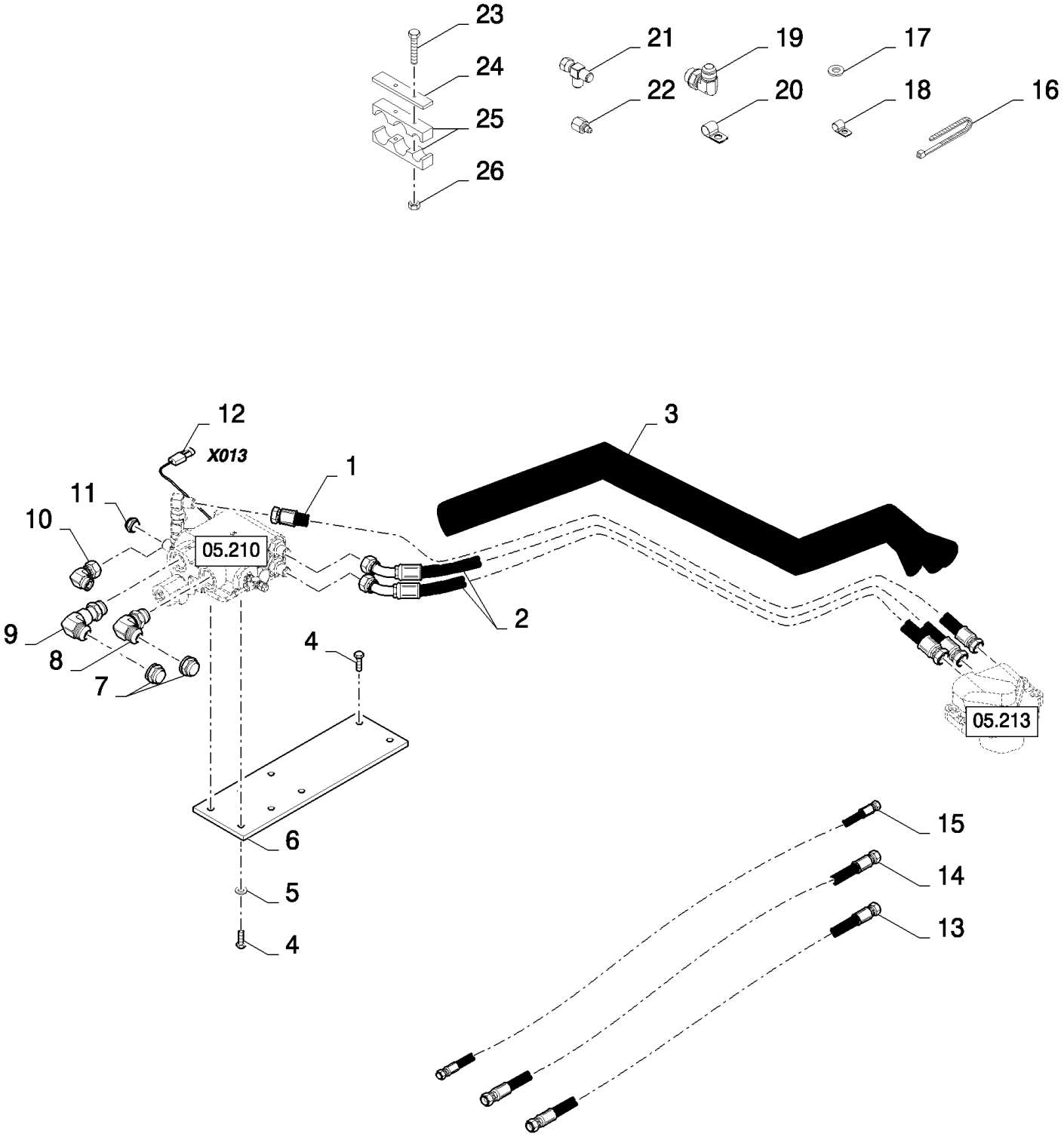

05.209(01) ADDITIONAL PARTS, POWERED

ссылка	Номер детали	Кол-во	Описание
1	84800191	1	HOSE, L=61"
1	84800192	1	HOSE, L=52"
2	84800190	4	HOSE, L=51"
3	84800193	2	SLEEVE,
4	86977691	4	BOLT, Hex, 3/8"-16 x 1 1/2", G8,
5	140045	2	WASHER, SPRING, {PP:80140045} Belleville, M10,
6	84800186	1	BRACKET,
7	NS	2	NOT SERVICED,
8	322894	1	ELBOW, {PP:80322894} 90є, 1 1/16"-12, 37є x 1 1/16"-12, O-Ring,
9	9512237	1	ELBOW, {PP:89512237}
10	248974	1	ELBOW, {PP:80248974} 90є, 3/4"-16, 37є x 3/4"-16, 37є Fem Sw,
11	NS	1	NOT SERVICED,
12	84446931	1	HARNESS, WIRE, , SEE FIGURE 06.556
13	84441308	1	HOSE, FLEXIBLE, L=123"
14	84807872	1	HOSE, FLEXIBLE, L=137"
15	84056198	1	HOSE, FLEXIBLE, L=150", ASN D408
15	9510872	1	HOSE, FLEXIBLE, {PP:89510872} , BSN C407
16	NS	28	NOT SERVICED,
17	87361	3	WASHER, {PP:80087361} 1/4", SAE,
18	84818444	2	CLAMP,
19	322894	2	ELBOW, {PP:80322894} 90є, 1 1/16"-12, 37є x 1 1/16"-12, O-Ring,
20	455556	1	CLAMP, {PP:80455556}
21	9507672	1	CONNECTION, 3 WAY, {PP:89507672}
22	9512230	1	REDUCER, {PP:89512230}
23	84807864	4	SCREW, M6x60
24	455534	2	SUPPORT, {PP:80455534}
25	455533	4	CLAMP, {PP:80455533}
26	412152	4	NUT, LOCK, {PP:80412152} M6 x 1, Cl 8.8,

05.210(01) POWERED REAR AXLE : VALVE

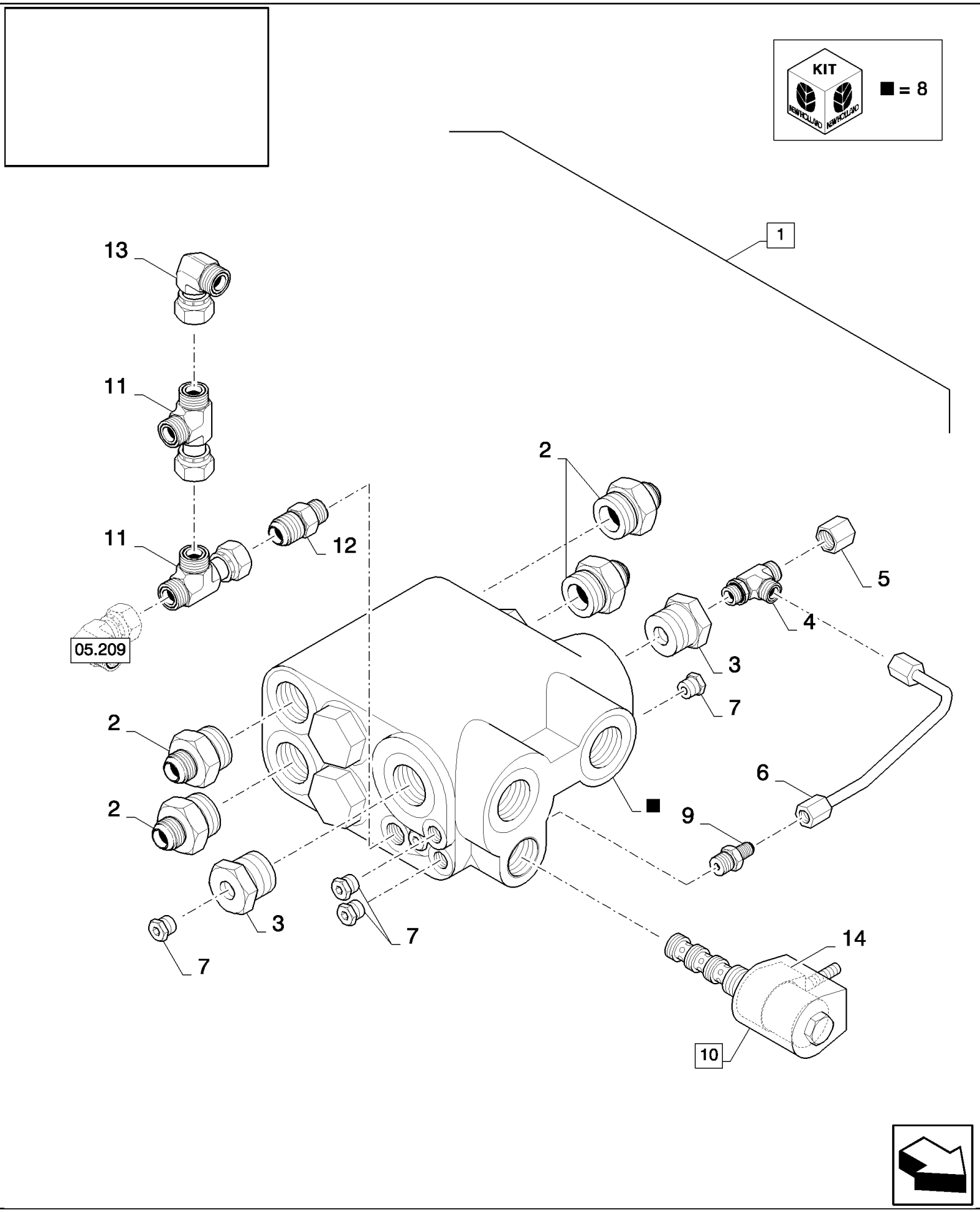

CS660 COMBINE BASE UNIT (1/03-) - Rear Axle

05.210(01) POWERED REAR AXLE : VALVE

ссылка	Номер детали	Кол-во	Описание
1	84800187	1	VALVE, HYDRAULIC,
2	176081	4	CONNECTOR, HYD., {PP:80176081} 3/4"-16, 37є x 1 1/16"-12, O-Ring,
3	84818470	2	CONNECTOR, HYD.,
4	9512226	1	CONNECTION, 3 WAY, {PP:89512226}
5	NS	1	NOT SERVICED,
6	9512171	1	TUBE, {PP:89512171}
7	NS	4	NOT SERVICED,
8	84800210	1	KIT, SEALS,
9	265235	1	CONNECTOR, HYD., {PP:80265235} 7/16"-20, 37є x 7/16"-20, O-Ring,
10	9512173	1	VALVE, HYDRAULIC, (14)
11	86511870	2	TEE, 37є, 3/4"-16 x 3/4"-16, Fem Sw Run,
12	84818471	1	CONNECTOR, HYD.,
13	248974	1	ELBOW, {PP:80248974} 90є, 3/4"-16, 37є x 3/4"-16, 37є Fem Sw,
14	9512196	1	ELECTROMAGNET,

05.211(01) POWERED REAR AXLE - MOUNTING KIT

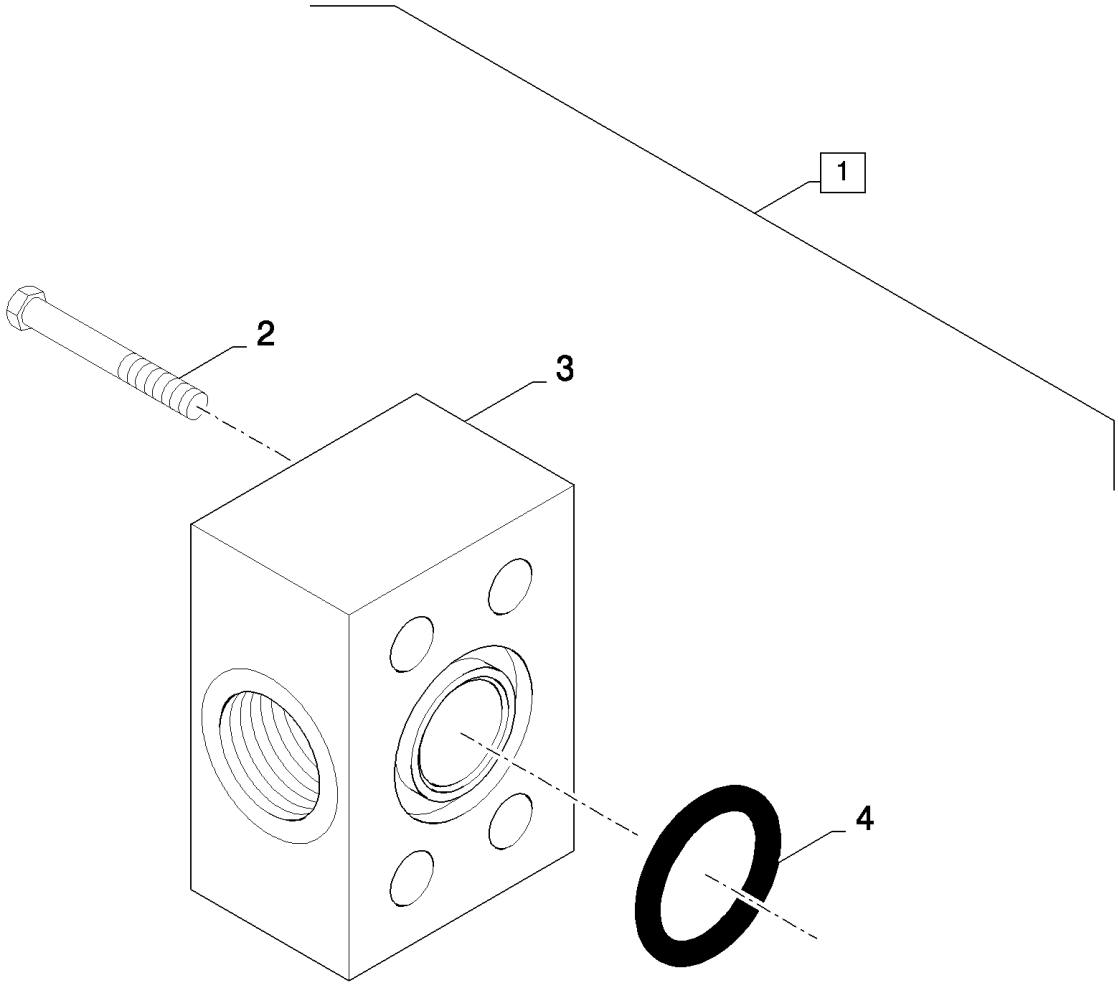

CS660 COMBINE BASE UNIT (1/03-) - Rear Axle

05.211(01) POWERED REAR AXLE - MOUNTING KIT

ссылка	Номер детали	Кол-во	Описание
1	84045157	2	KIT, , FOR MOUNTING KIT 100CC
1	84053542	2	KIT, , FOR MOUNTING KIT 130CC
2	89512275	4	BOLT, , FOR MOUNTING KIT 100CC
2	9818286	4	BOLT, {PP:89818286} Hex, 1/2"-13 x 3 1/2", G8, , FOR MOUNTING KIT 130CC
3	9811684	1	ADAPTER, {PP:89811684} , FOR MOUNTING KIT 100CC
3	9818288	1	ADAPTER, {PP:89818288} , FOR MOUNTING KIT 130CC
4	353108	1	O-RING, {PP:80353108} -219, 70 Duro, 1.296" ID x .139" Thk, , FOR MOUNTING KIT 100CC
4	14464080	1	O-RING, -222, 70 Duro, 1.484" ID x .139" Thk, , FOR MOUNTING KIT 130CC

05.212(01) POWERED REAR AXLE : WHEEL MOTOR

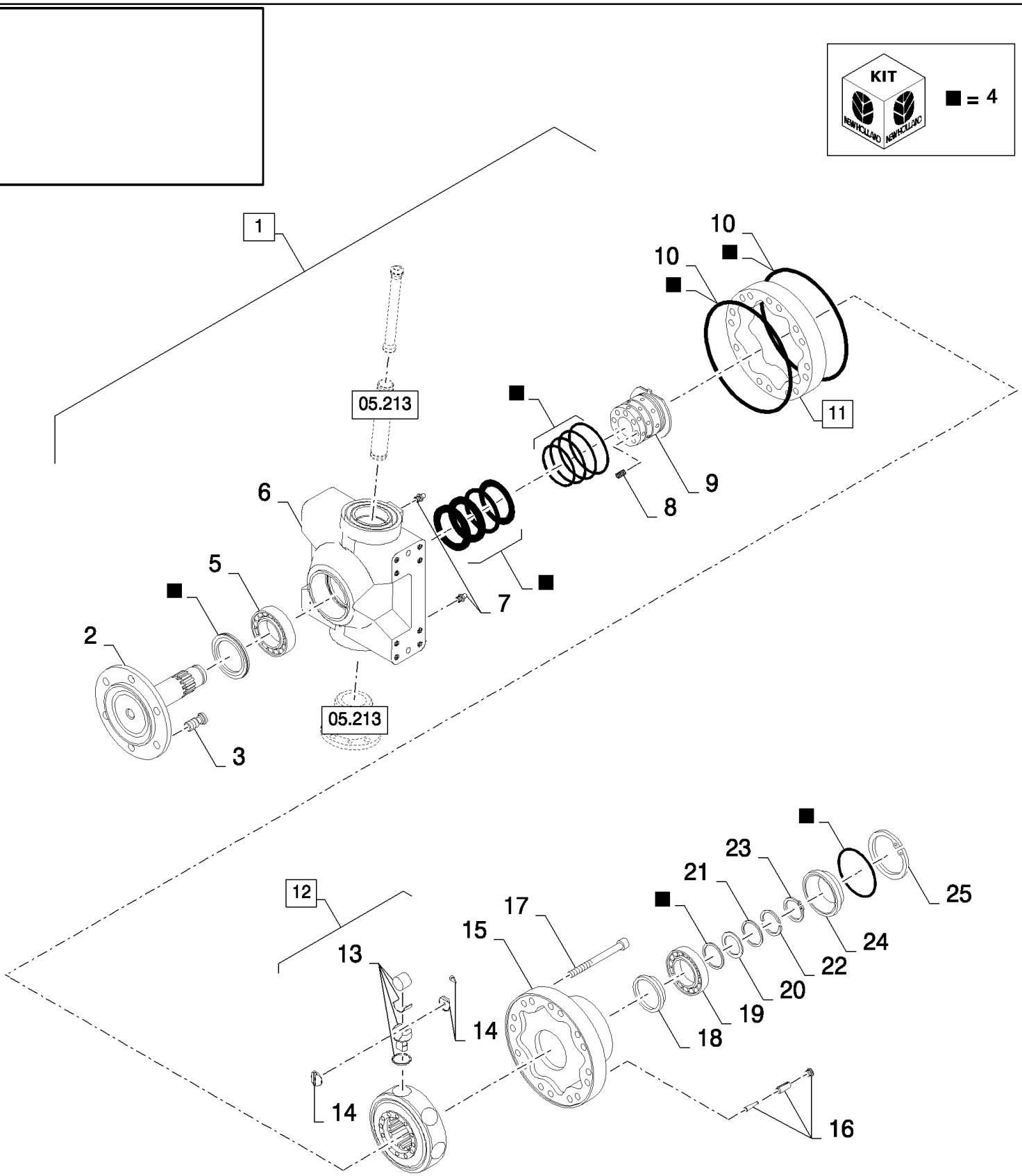

05.212(01) POWERED REAR AXLE : WHEEL MOTOR

ссылка	Номер детали	Кол-во	Описание
1	84800175	2	MOTOR, HYDRAULIC, (2 to 25), Incl. 05.213, FOR WHEEL MOTOR 935CC
1	84800195	2	MOTOR, HYDRAULIC, (2 to 25), Incl. 05.213, FOR WHEEL MOTOR 1250CC
2	84800204	1	HUB,
3	9512182	10	STUD, {PP:89512182} M20
4	84817901	1	KIT, SEALS,
5	84018637	1	BEARING ASSY,
6	84817919	1	HOUSING,
7	84817929	2	NIPPLE, LUBE,
8	9512195	8	SPRING, {PP:89512195}
9	9512193	1	DISTRIBUTOR, {PP:89512193}
10	NS	2	NOT SERVICED,
11	9512192	1	CAM, {PP:89512192} (10)
12	84018630	1	ROTOR, (13,14), FOR WHEEL MOTOR 935CC
12	84800197	1	ROTOR, (13,14), FOR WHEEL MOTOR 1250CC
13	9512215	10	KIT, {PP:89512215} , FOR WHEEL MOTOR 935CC
13	84800198	10	KIT, , FOR WHEEL MOTOR 1250CC
14	84018631	1	KIT, , FOR WHEEL MOTOR 935CC
14	84800199	1	KIT, , FOR WHEEL MOTOR 1250CC
15	84817907	1	HOUSING,
16	84800205	2	PIN,
17	84069080	14	SCREW, M12x75
18	84817909	1	SPACER,
19	84817910	1	BEARING ASSY,
20	84817903	1	SPACER,
21	84817912	1	RING,
22	84817911	2	HALF-RING,
23	84817913	1	RING,
24	84817914	1	COVER,
25	84817915	1	CIRCLIP,

05.213(01) POWERED REAR AXLE : WHEEL MOTOR

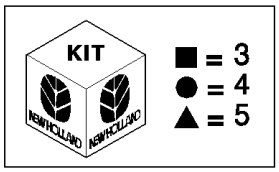

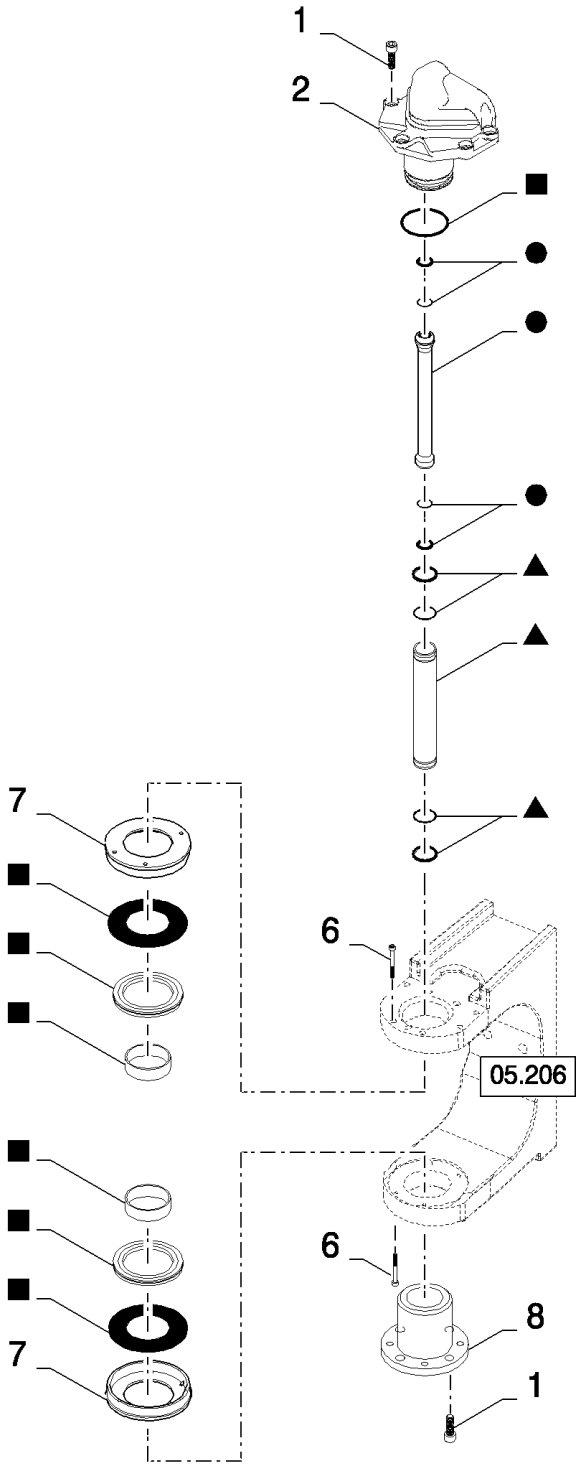

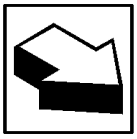

05.213(01) POWERED REAR AXLE : WHEEL MOTOR

ссылка	Номер детали	Кол-во	Описание
1	86508097	9	SCREW, Hex Soc Hd, M10 x 25, 12.9,
2	84817895	1	HUB,
3	84800211	1	KIT,
4	84800213	1	KIT, SEALS,
5	84800212	1	KIT, SEALS,
6	9515561	8	SCREW, Hex Soc Hd, M6 x 35, 12.9,
7	84817924	2	COVER,
8	84800194	1	PIN,

ELECTRICAL SYSTEM	**SYSTÈME ELECTRIQUE**	**SISTEMA ELÉCTRICO**	**ELECTRISK SYSTEM**
SISTEMA DI ELETTRICO	**ELEKTRISCHES SYSTEME**	**SISTEMA ELÉCTRICA**	**ELEKTRISCH SYSTEEM**

SEC. 6

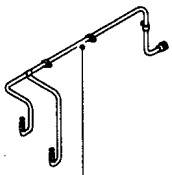
06.201

06.202

06.203

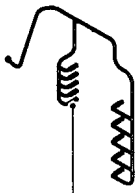
06.204

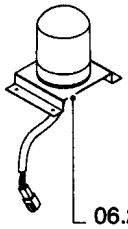
06.205

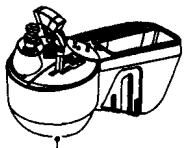
06.206
06.207
06.208

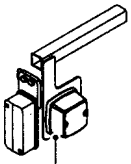
06.209

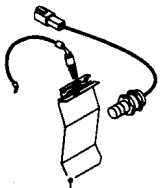
06.210

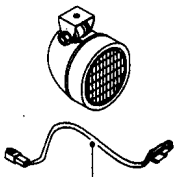
06.211

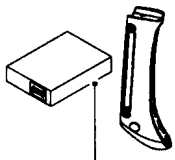
06.212

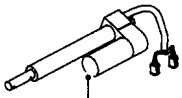
06.213

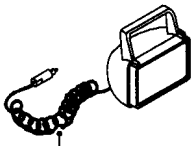
06.214

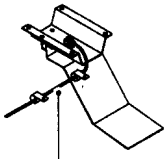
06.215

06.216

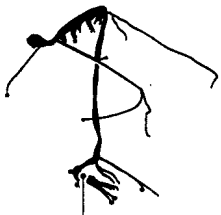
06.217

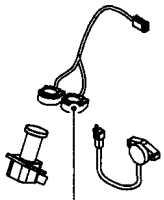
06.218

06.219

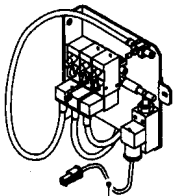
06.220

06.221

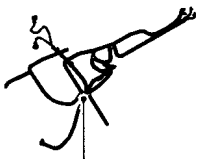
06.222

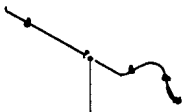
06.223

06.224

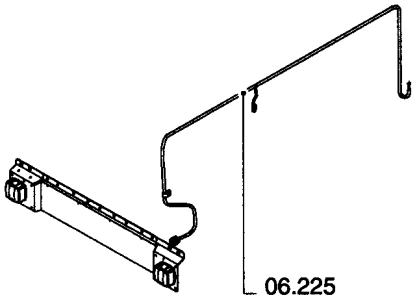
06.225

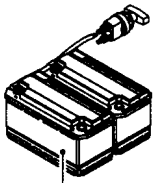
06.226

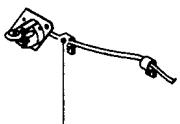
06.227

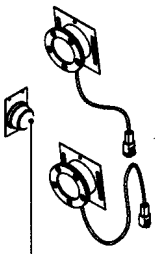
06.228

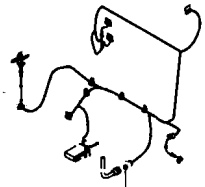
06.229

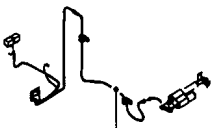
06.230

06.000(01) SECTION LIST 6

ссылка	Номер детали	Кол-во	Описание

ELECTRICAL SYSTEM	**SYSTÈME ELECTRIQUE**	**SISTEMA ELÉCTRICO**	**ELECTRISK SYSTEM**
SISTEMA DI ELETTRICO	**ELEKTRISCHES SYSTEME**	**SISTEMA ELÉCTRICA**	**ELEKTRISCH SYSTEEM**

SEC. 6

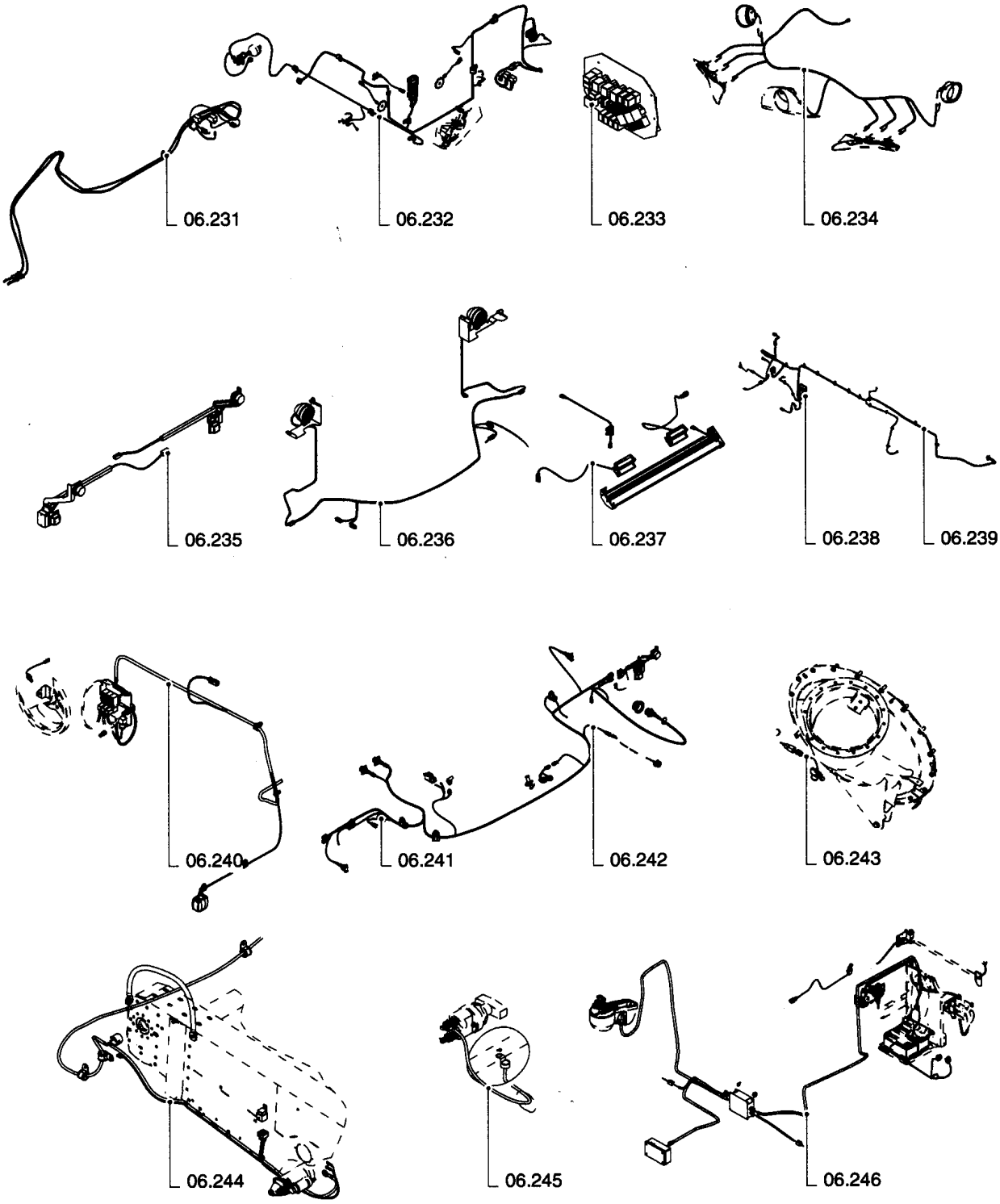

06.000(02) SECTION LIST 6

ссылка	Номер детали	Кол-во	Описание

ELECTRICAL SYSTEM	**SYSTÈME ELECTRIQUE**	**SISTEMA ELÉCTRICO**	**ELECTRISK SYSTEM**
SISTEMA DI ELETTRICO	**ELEKTRISCHES SYSTEME**	**SISTEMA ELÉCTRICA**	**ELEKTRISCH SYSTEEM**

SEC. 6

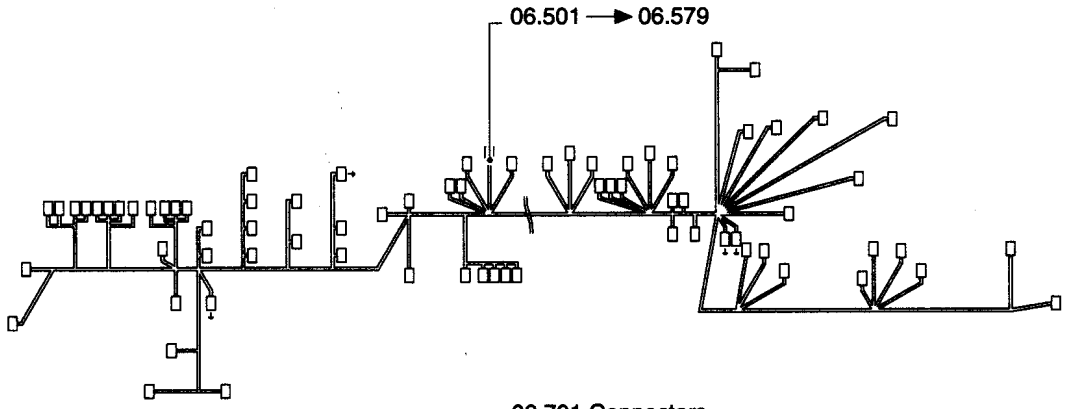

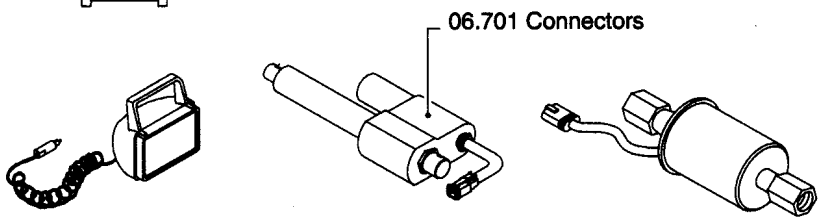

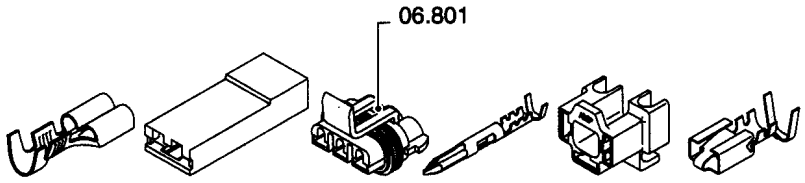

06.000(03) SECTION LIST 6

сылка	Номер детали	Кол-во	Описание

06.201(01) STRAW ELEVATOR, ELECTRICAL COMPONENTS

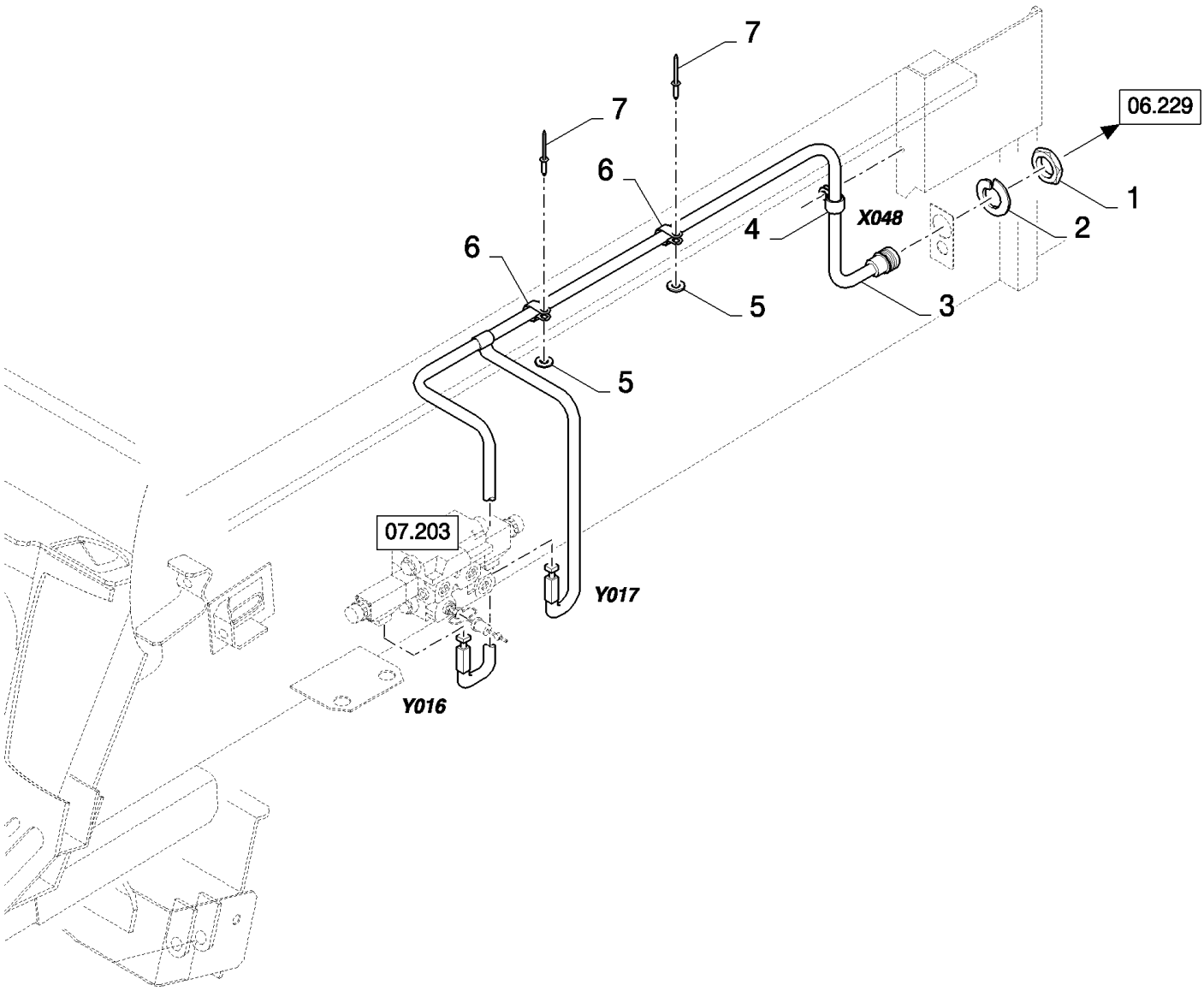

06.201(01) STRAW ELEVATOR, ELECTRICAL COMPONENTS

ссылка	Номер детали	Кол-во	Описание
1	86619907	1	NUT,
2	636665	1	WASHER, LOCK, {PP:80636665}
3	84437346	1	HARNESS, WIRE, , SEE FIGURE 06.531 01, BSN C375
3	84454161	1	HARNESS, WIRE, , SEE FIGURE 06.531 02, ASN D376
4	9706748	1	CLAMP, {PP:89706748} 5/8", Insul, 5/16" Bolt,
5	322356	2	WASHER, LOCK, {PP:80322356} 5MM
6	9503929	2	CLAMP, {PP:89503929}
7	NS	2	NOT SERVICED, Rivet

06.202(01) HEADLIGHTS

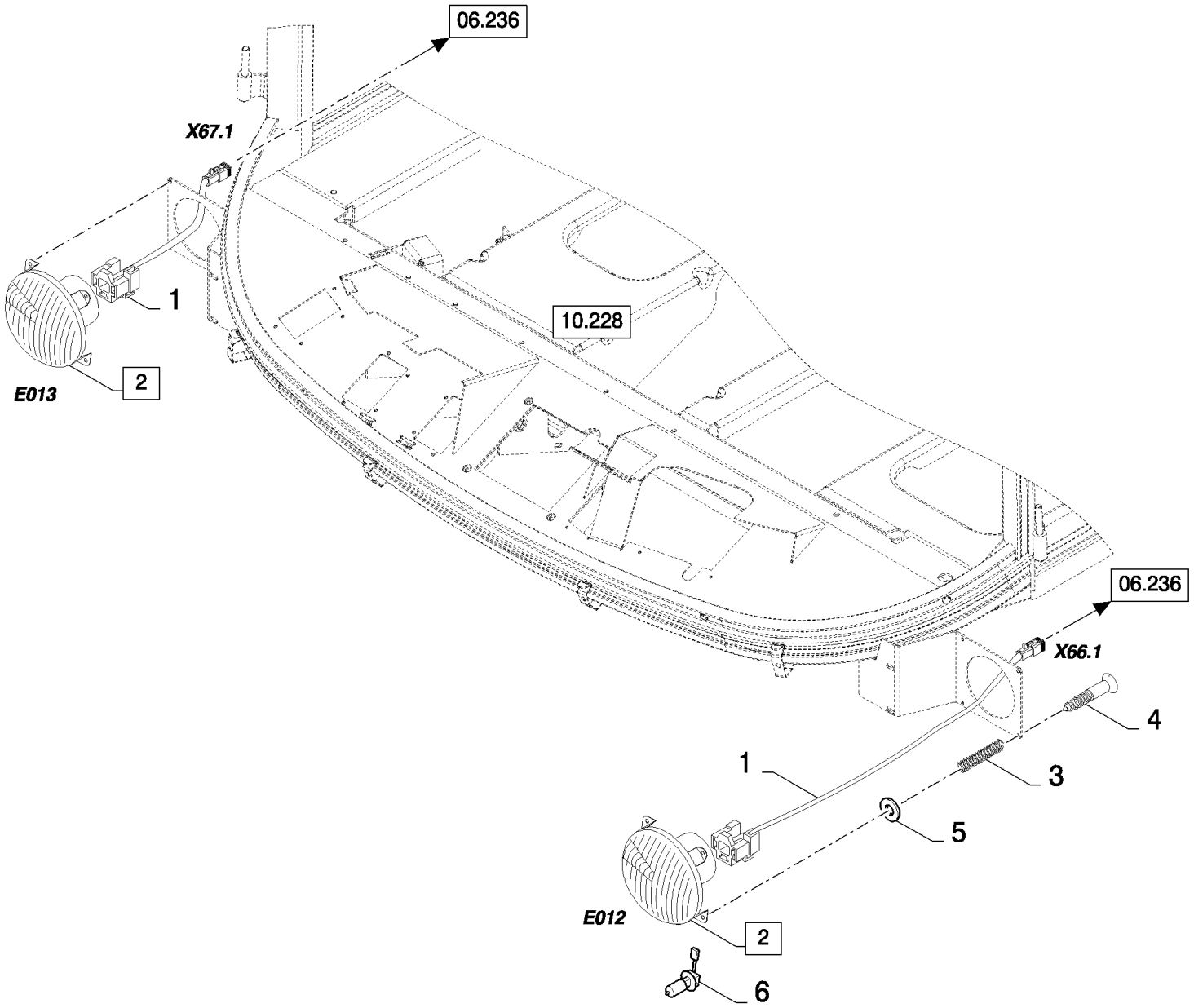

06.202(01) HEADLIGHTS

ссылка	Номер детали	Кол-во	Описание
1	84437362	2	HARNESS, WIRE, , SEE FIGURE 06.532/06.533
2	84807010	2	LAMP, (3 to 6), BSN C319
2	84067914	2	HEADLAMP, (3 to 6), ASN D320
2	84807011	2	LAMP, (3 to 6), FOR UK ONLY, BSN C319
2	84067913	2	HEADLAMP, (3 to 6), FOR UK ONLY, ASN D320
3	84429835	4	SPRING,
4	84429834	4	SCREW,
5	89824840	4	WASHER,
6	446592	1	BULB, {PP:80446592}

06.203(01) FEEDER ANGLE SENSOR

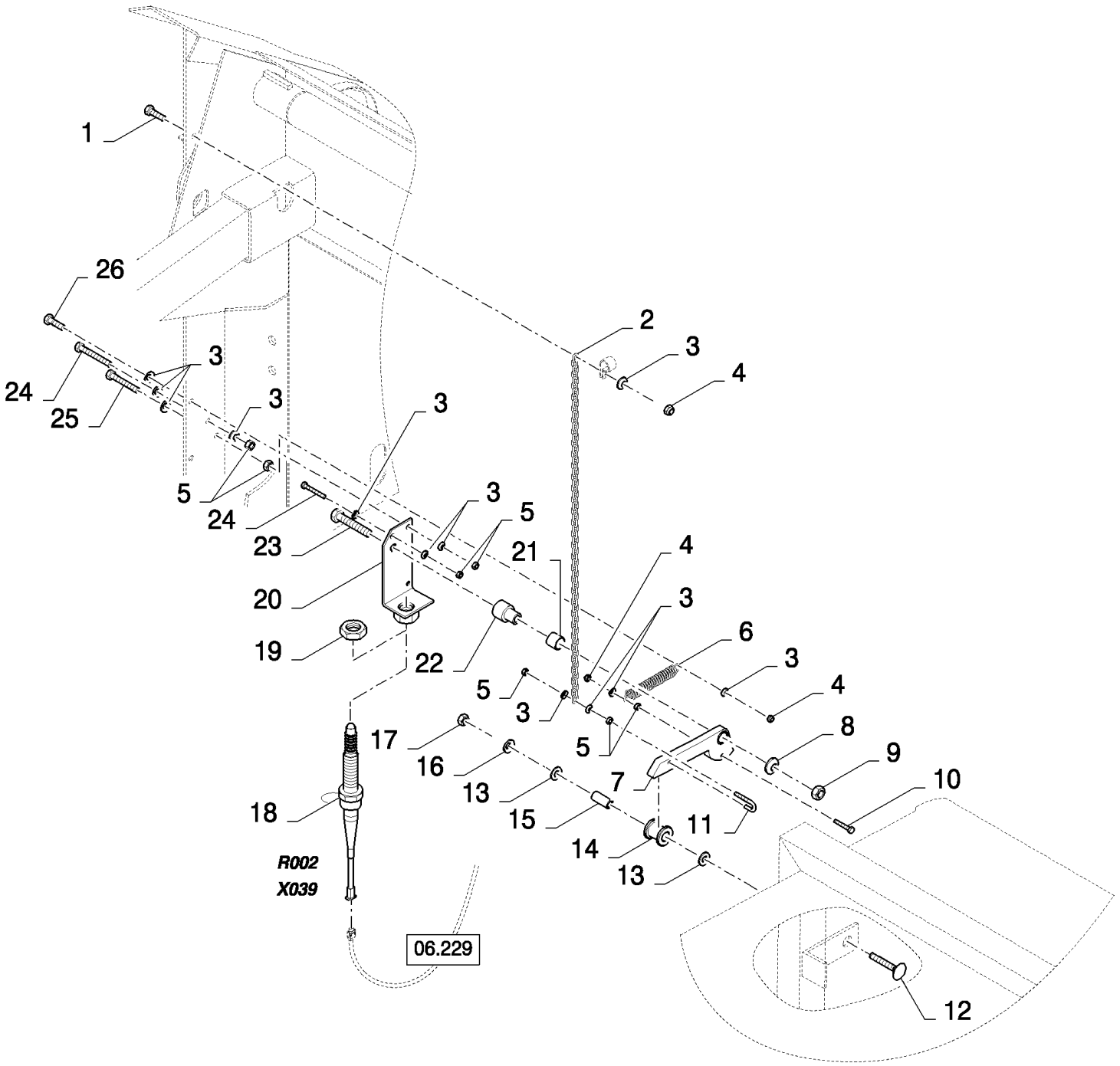

06.203(01) FEEDER ANGLE SENSOR

ссылка	Номер детали	Кол-во	Описание
1	86977786	1	BOLT, Hex, M6 x 25, 8.8,
2	84439869	1	CHAIN,
3	322357	14	WASHER, SPRING, Belleville, M6,
4	412152	3	NUT, LOCK, M6 x 1, Cl 8.8,
5	15896221	8	NUT, M6, Cl 10,
6	180071	1	SPRING, {PP:80180071}
7	84437875	1	CAM,
8	140046	1	WASHER, SPRING, Belleville, M12,
9	9706685	1	NUT, M12, Cl 8,
10	86977789	1	BOLT, Hex, M6 x 35, 8.8,
11	359726	1	HOOK, {PP:80359726}
12	374894	1	BOLT, CARRIAGE, {PP:80374894} Short NK, M10 x 70, Cl8.8, M10x70
13	140042	2	WASHER, M10 x 34 x 3,
14	9815357	1	ROLLER, {PP:89815357}
15	9815355	1	SPACER, {PP:89815355}
16	140045	1	WASHER, SPRING, Belleville, M10,
17	100016	1	NUT, M10, Cl 8,
18	9513732	1	SENSOR, {PP:89513732}
19	100033	1	NUT, Thin, M24 x 1.5, Cl 04,
20	84439808	1	BRACKET,
21	420761	1	BUSHING, {PP:80420761}
22	84439607	1	BUSHING,
23	9706693	1	BOLT, Hex, M12 x 60, 8.8,
24	412559	2	BOLT, {PP:80412559} Hex, M6 x 50, 8.8, Full Thd, M6x50
25	120102	1	BOLT, Hex, M6 x 40, 8.8, Full Thd,
26	120100	2	BOLT, Hex, M6 x 20, 8.8,

06.204(01) HARNESS FOR STACK VALVE

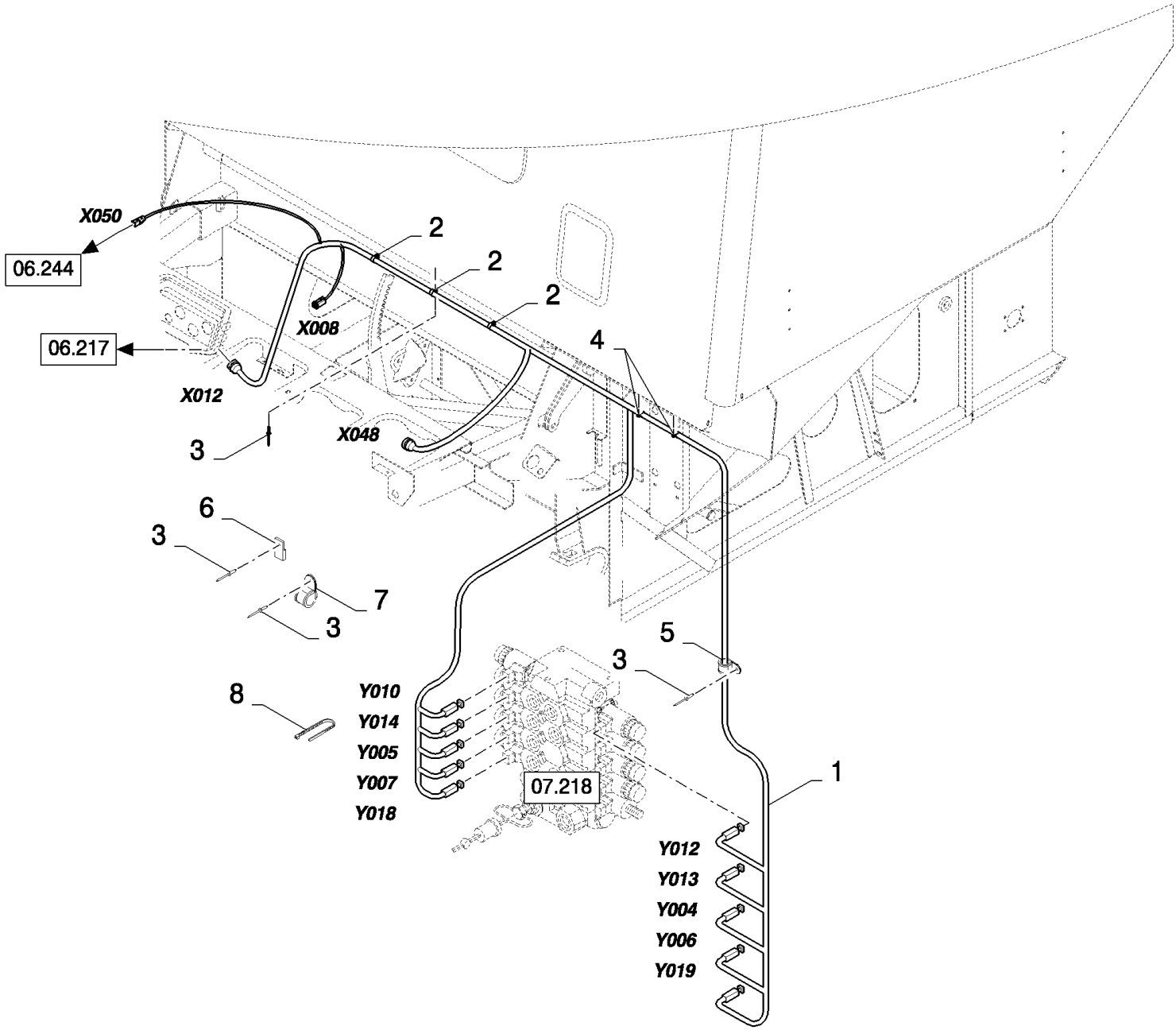

06.204(01) HARNESS FOR STACK VALVE

ссылка	Номер детали	Кол-во	Описание
1	84434104	1	HARNESS, WIRE, , SEE FIGURE 06.506 01, BSN C375
1	84454108	1	HARNESS, WIRE, , SEE FIGURE 06.506 02, ASN D376
1	84454110	1	HARNESS, WIRE, , SEE FIGURE 06.579, FOR CS540 ONLY
1	84454107	1	HARNESS, WIRE, , FOR CL560 ONLY, FOR LATERAL FLOTATION ONLY, SEE FIGURE 06.578, FOR CS520 ONLY
1	84447223	1	HARNESS, WIRE, , FOR CS520 ONLY, SEE FIGURE 06.558
2	9503931	3	CLAMP, {PP:89503931}
2	84818444	3	CLAMP, , FOR CS520, CS540 ONLY, FOR CL560 ONLY
3	NS	3	NOT SERVICED, Rivet
4	9837692	2	CLAMP, {PP:89837692}
5	84818443	1	CLAMP, , FOR CL560 ONLY, FOR CS520 ONLY
6	84058832	1	CLIP, , FOR CS520 ONLY, FOR CL560 ONLY
7	84818442	1	CLAMP, , FOR CL560 ONLY, FOR CS520 ONLY
8	89993154	10	CLAMP, , FOR CS520 ONLY, FOR CL560 ONLY

06.205(01) REAR BEACON LIGHT

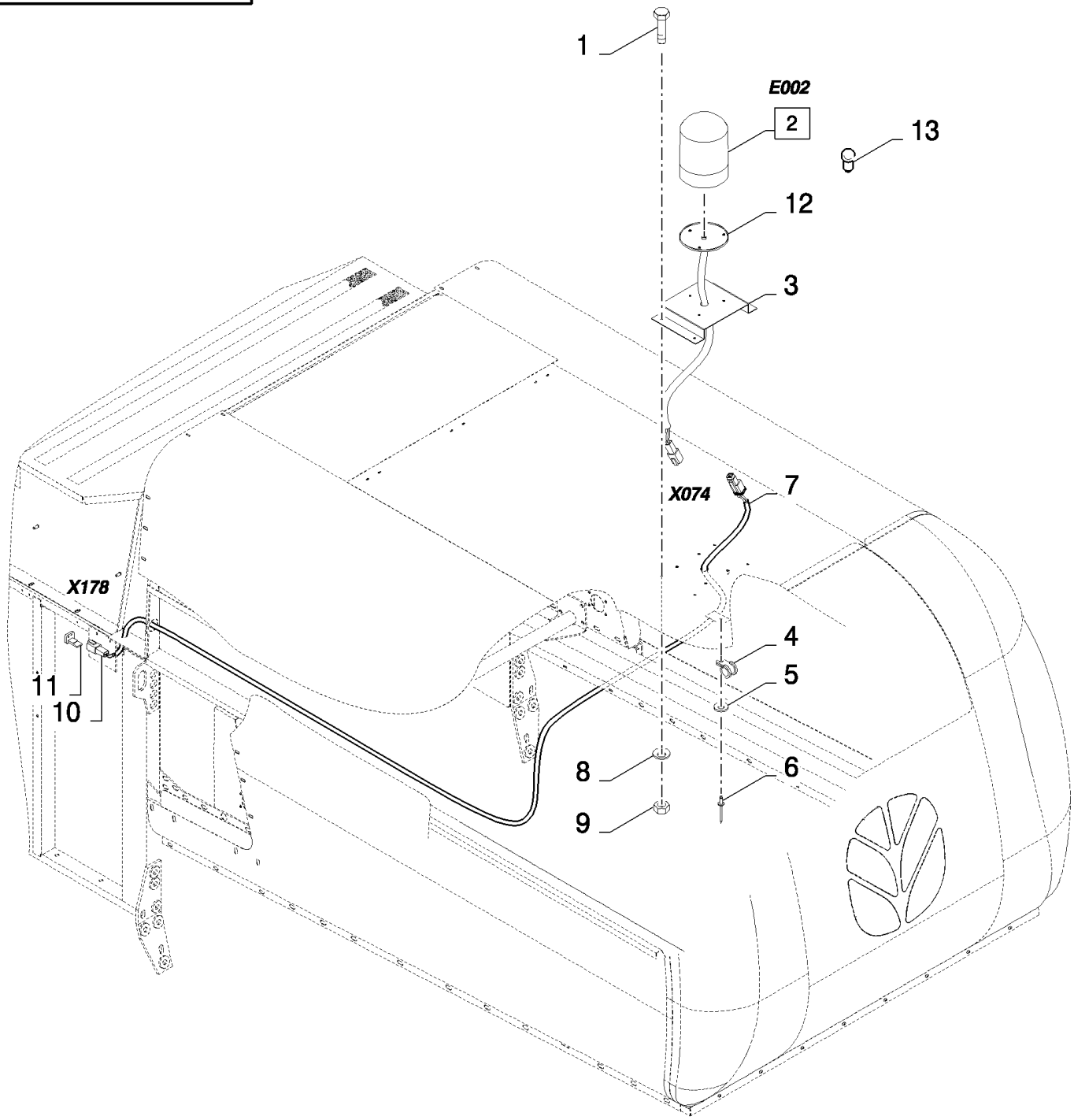

06.205(01) REAR BEACON LIGHT

ссылка	Номер детали	Кол-во	Описание
1	120100	4	BOLT, Hex, M6 x 20, 8.8,
2	84067911	1	BEACON, (12,13), SEE FIGURE 06.701, BSN C479
2	87050694	1	BEACON, (12,13), SEE FIGURE 06.701, ASN D480
3	84439613	1	SUPPORT,
4	9507807	3	CLAMP,
5	322356	3	WASHER, LOCK, 5MM
6	NS	3	NOT SERVICED, Rivet
7	84437323	1	HARNESS, WIRE, , SEE FIGURE 06.529
8	322357	4	WASHER, SPRING, Belleville, M6,
9	15896221	4	NUT, M6, Cl 10,
10	84074630	1	CONNECTOR, WIRE,
11	86500166	1	PLUG,
12	NSS	1	NOT SERVICED SEPARATELY, SEAL
13	86616248	1	BULB, #HI, 55w,

06.206(01) RIGHT HAND CONSOLE

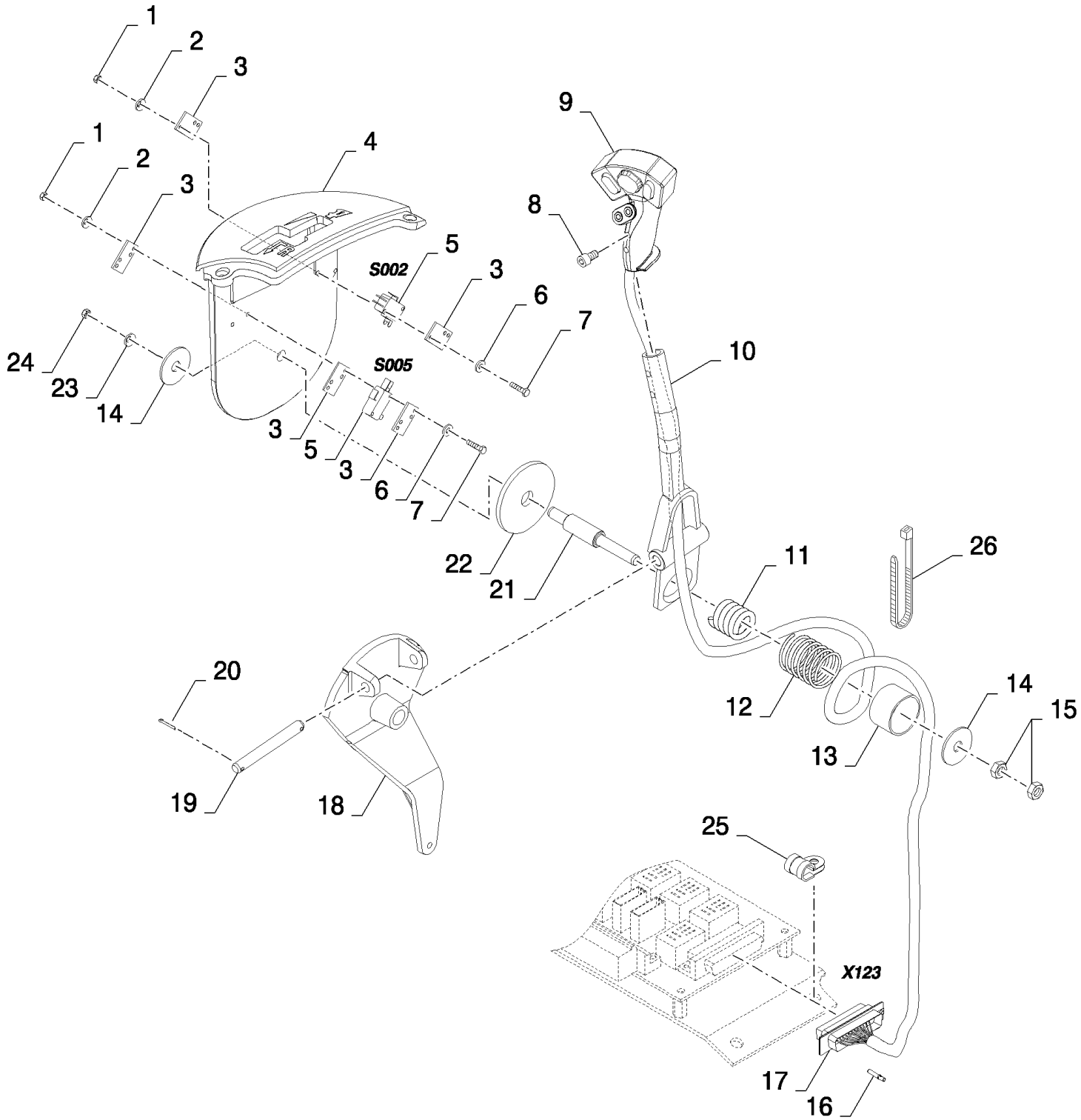

06.206(01) RIGHT HAND CONSOLE

ссылка	Номер детали	Кол-во	Описание
1	86508812	4	NUT, M3, Cl 8,
2	412547	4	WASHER, {PP:80412547} Serr, M3, 3MM
3	84002065	5	PLATE,
4	84320424	1	COVER,
5	399159	2	SWITCH, {PP:80399159}
6	412548	4	WASHER, {PP:80412548} 3MM
7	9839301	4	SCREW, {PP:89839301} Cross Pan Hd, M3 x 35, M3x35
8	89819756	2	SCREW, M4x8
9	84100239	1	HANDLE,
10	84814235	1	HANDLE,
11	320502	1	SPRING, {PP:80320502}
12	750881	1	SPRING, {PP:80750881}
13	84007406	1	BUSHING,
14	740318	2	WASHER, {PP:80740318} 10MM, BSN C323
14	140219	2	WASHER, {PP:80140219} , ASN D324
15	84807411	2	NUT, Thin, M10 x 1.5, Cl 04,
16	84018300	20	CONNECTOR, HYD.,
17	84018301	1	BLOCK, CONNECTING,
18	84400377	1	CONNECTION, SWIVEL,
19	412102	1	PIN, {PP:80412102}
20	130003	2	PIN, SPLIT (COTTER), {PP:80130003} M3.2 x 20,
21	9819970	1	SHAFT, {PP:89819970}
22	84056641	1	DISC,
23	140045	1	WASHER, SPRING, Belleville, M10,
24	100016	1	NUT, M10, Cl 8,
25	9507809	1	CLAMP, {PP:89507809}
26	323597	1	STRAP, CABLE, {PP:80323597}

06.207(01) RIGHT HAND CONSOLE

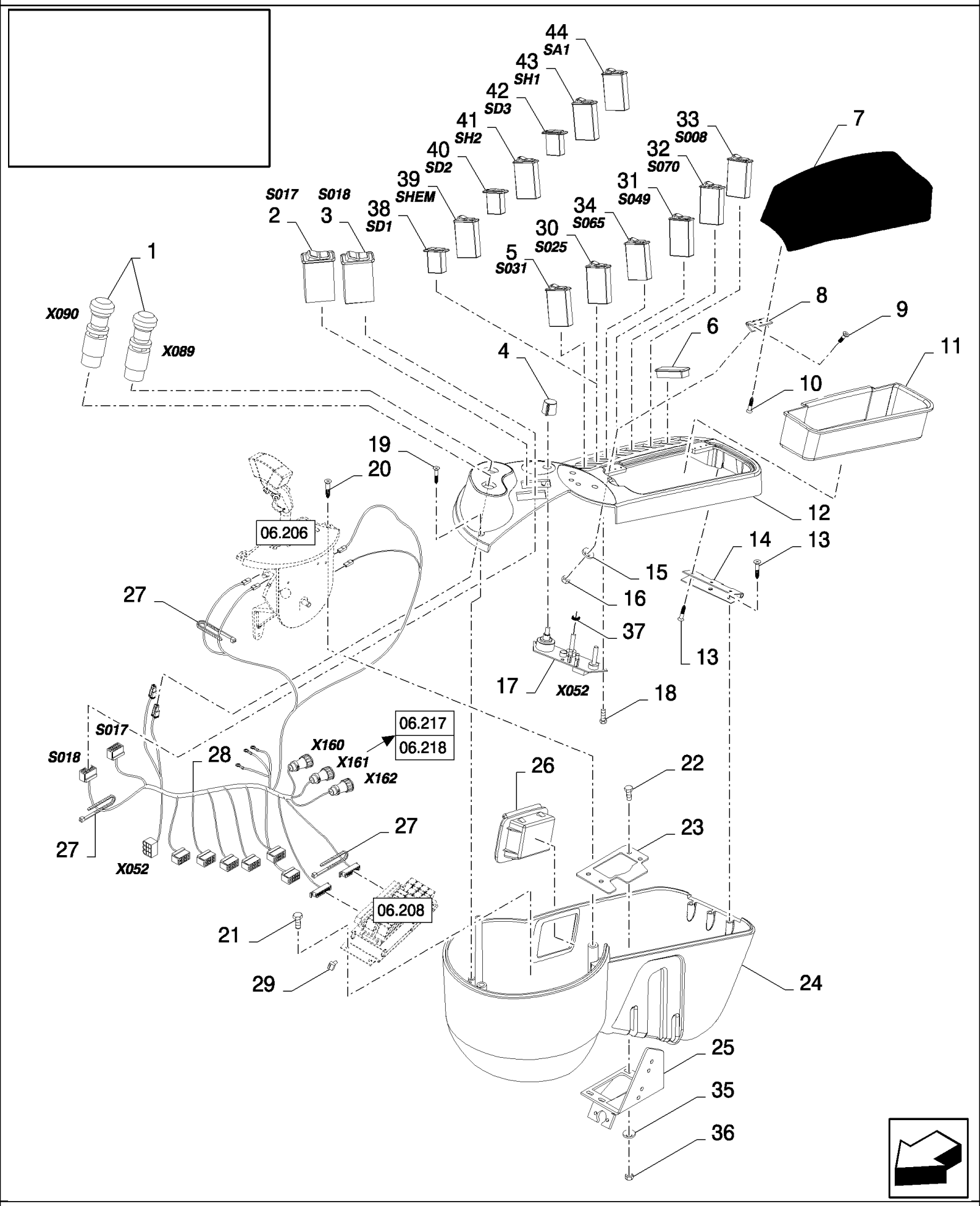

06.207(01) RIGHT HAND CONSOLE

ссылка	Номер детали	Кол-во	Описание
1	84441552	2	SWITCH, M4x16, BSN C415
1	82014977	2	SWITCH, M8x25, ASN D416
2	84320658	1	SWITCH, DRUM VARIATOR
3	84320659	1	SWITCH, FAN VARIATOR
4	9819758	3	KNOB, {PP:89819758}
5	84320654	1	SWITCH, SAFETY ON THE ROAD
6	84807276	7	COVER,
7	84320427	1	ARMREST,
8	84441102	2	HINGE,
9	84441797	6	SCREW, Hex Soc Flat Hd, M4 x 12, 8.8, , BSN C415
10	84441761	6	SCREW,
10	84441761	12	SCREW, , ASN D416
11	84320426	1	BOX,
12	84320422	1	HOUSING,
13	9835804	6	SCREW, {PP:89835804}
14	84441100	1	HINGE,
15	322355	6	WASHER, SPRING, Belleville, M4,
16	86509264	6	NUT, M4, Cl 10, M4
17	84077817	1	BOARD, PRINTED CIRCUIT,
18	385683	3	BOLT, Hex, M4 x 10, 8.8, Full Thd,
19	412477	2	SCREW, {PP:80412477} Cross Oval Hd, M4 x 25, M4x25
20	300580	2	SCREW, {PP:80300580} Hex Flat Hd, M6 x 16, 4.8, M6x16
21	86508568	4	BOLT, Hex, M6 x 16, 8.8,
22	412064	4	SCREW, Hex, M4 x 16, 8.8, Full Thd, , BSN C415
22	43127	4	BOLT, Hex, M8 x 25, 8.8, , ASN D416
23	84440905	1	PLATE,
24	84320423	1	HOUSING,
25	84443568	1	SUPPORT,
26	89990474	1	ASH TRAY,
27	NS	3	NOT SERVICED,
28	84434461	1	HARNESS, WIRE, , SEE FIGURE 06.507 01, BSN C409
28	84457856	1	HARNESS, WIRE, , SEE FIGURE 06.507 02, ASN D410
29	84018302	1	KIT,
30	84320656	1	SWITCH, SELF-LEVELLING, NOT FOR CL560
31	84320655	1	SWITCH, SPREADPLATES, NOT FOR CL560
32	84400442	1	SWITCH, VERTICAL KNIFE, NOT FOR CL560
33	84806859	1	SWITCH, 4 WHEEL DRIVE, FOR CS540, CS640, CS660 ONLY
34	84320660	1	SWITCH, REEL SYN, NOT FOR CL560
35	322355	4	WASHER, SPRING, Belleville, M4, , BSN C415
35	322358	4	WASHER, SPRING, Belleville, M8, , ASN D416
36	86509264	4	NUT, M4, Cl 10, M4, BSN C415
36	89706690	4	NUT, M8, Cl 8, , ASN D416
37	335315	4	GROMMET, {PP:80335315}
38	84430275	1	LIGHT, , FOR CL560 ONLY
39	84430276	1	PUSH BUTTON, , FOR CL560 ONLY

06.207(01) RIGHT HAND CONSOLE

сылка	Номер детали	Кол-во	Описание
40	84430275	1	LIGHT, , FOR CL560 ONLY
41	84430277	1	PUSH BUTTON, , FOR CL560 ONLY
42	84430275	1	LIGHT, , FOR CL560 ONLY
43	84430277	1	PUSH BUTTON, , FOR CL560 ONLY
44	84430278	1	SWITCH, , FOR CL560 ONLY

06.208(01) RIGHT HAND CONSOLE

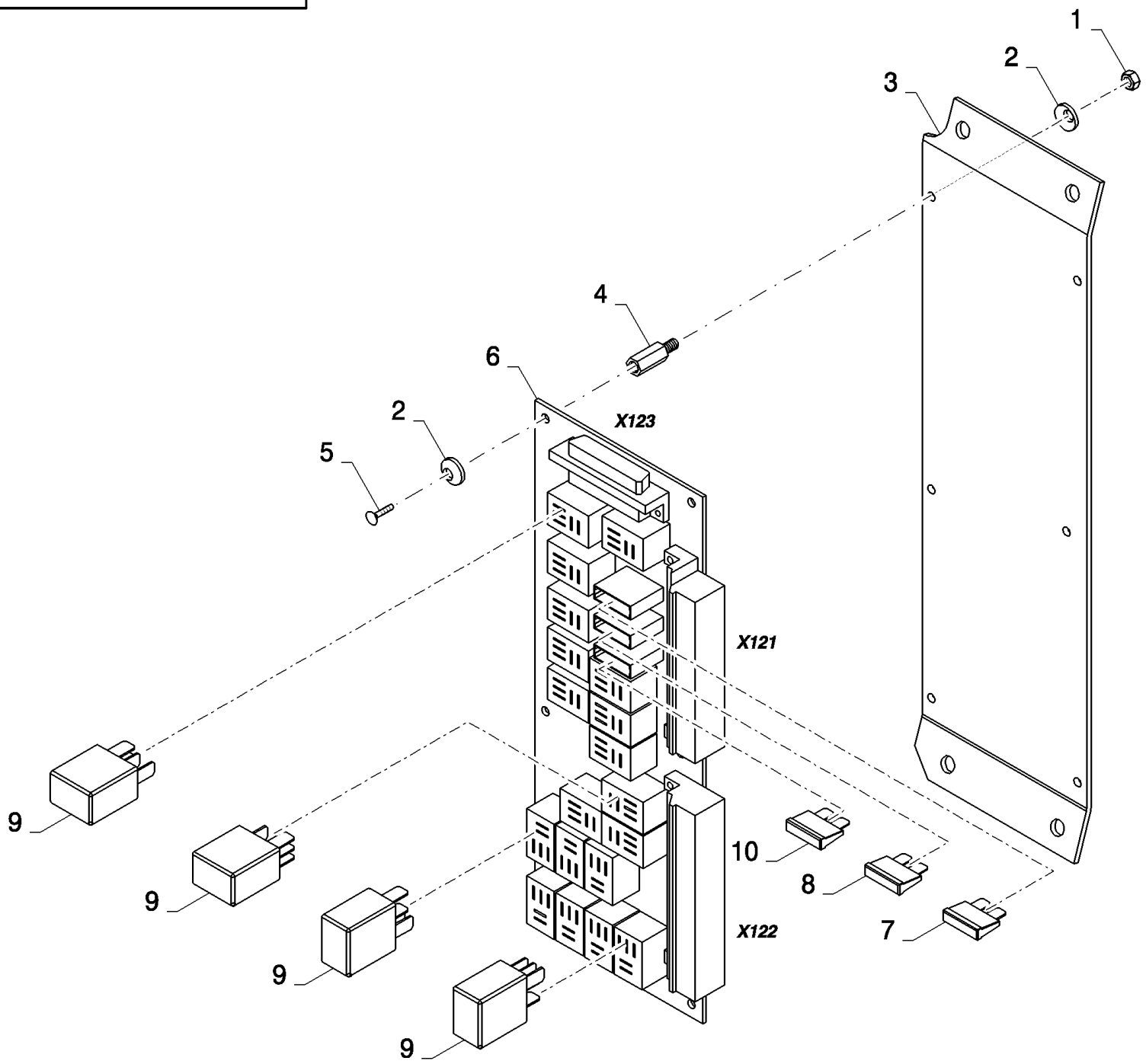

06.208(01) RIGHT HAND CONSOLE

ссылка	Номер детали	Кол-во	Описание
1	100012	6	NUT, M4, Cl 8,
2	322355	12	WASHER, SPRING, Belleville, M4,
3	84439591	1	SUPPORT,
4	84814397	6	BUSHING,
5	86511823	6	SCREW, Cross Pan Hd, M4 x 8, M4x8
6	84076826	1	BOARD, PRINTED CIRCUIT, , BSN C363
6	84452524	1	BOARD, PRINTED CIRCUIT, , BSN F364491
6	87327287	1	BOARD, PRINTED CIRCUIT, , ASN D492
7	9504308	1	FUSE, 15A
8	9811773	1	FUSE, 10A
9	86509590	19	RELAY,
10	9504310	1	FUSE, 25A

06.209(01) STANDARD LIGHTS, FRONT

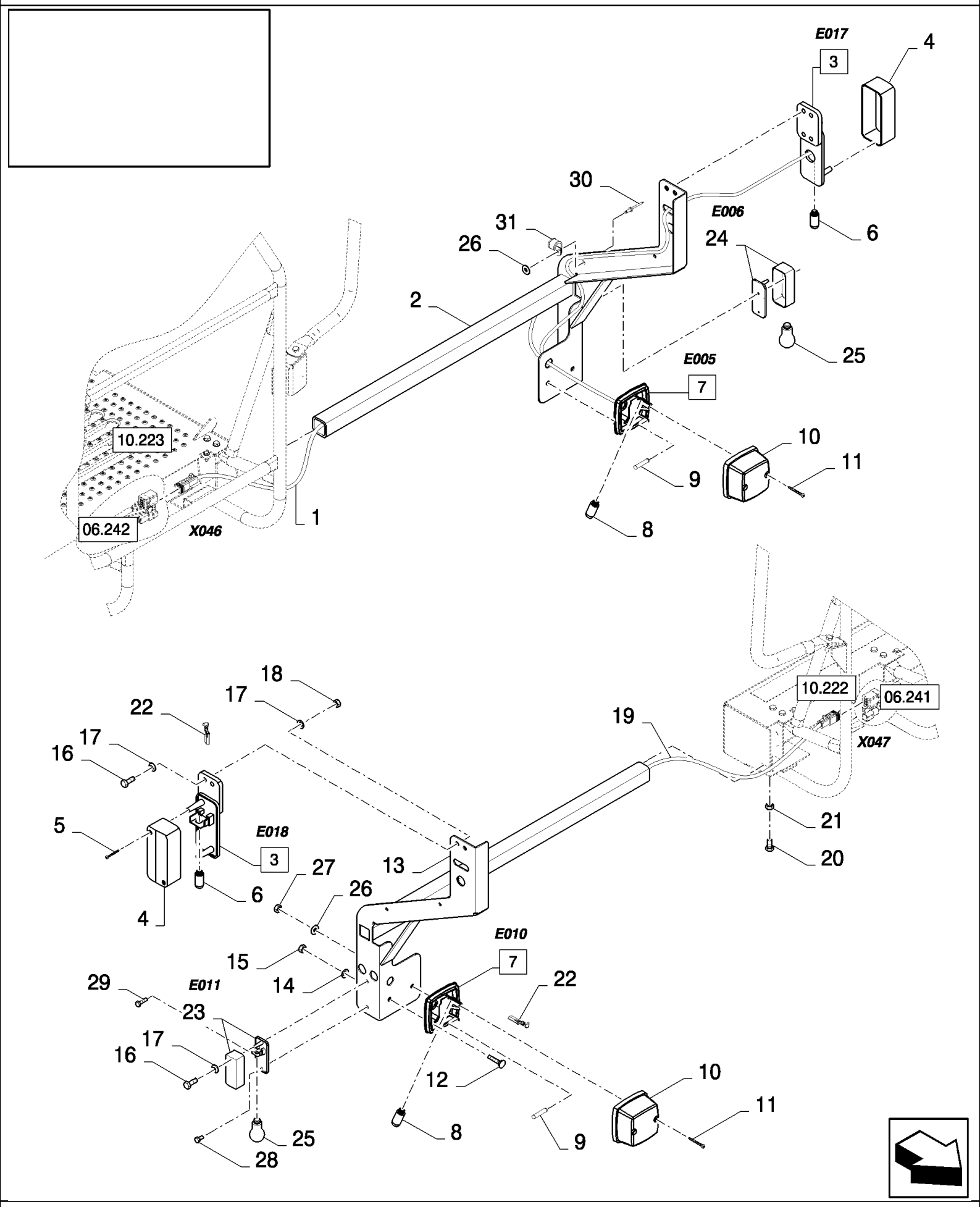

06.209(01) STANDARD LIGHTS, FRONT

ссылка	Номер детали	Кол-во	Описание
1	84441420	1	HARNESS, WIRE, , FOR FINLAND, ITALY, SWITZERLAND, BENELUX ONLY, SEE FIGURE 06.542, BSN C319
1	84448037	1	HARNESS, WIRE, , FOR FINLAND, ITALY, SWITZERLAND, BENELUX ONLY, FOR CL560 ONLY, SEE FIGURE 06.562, ASN D320
1	84437371	1	HARNESS, WIRE, , FOR UK, GERMANY, HUNGARY, FRANCE, SCANDINAVIA, RUSSIA ONLY, FOR CL560 ONLY, SEE FIGURE 06.534
2	84814350	1	SUPPORT, , FOR CL560 ONLY, FOR UK, GERMANY, HUNGARY, FRANCE, SCANDINAVIA, RUSSIA ONLY
2	84814350	1	SUPPORT, , FOR FINLAND, ITALY, SWITZERLAND, BENELUX ONLY, BSN C319
2	84447492	1	SUPPORT, , FOR FINLAND, ITALY, SWITZERLAND, BENELUX ONLY, FOR CL560 ONLY, ASN D32
3	449531	2	LAMP, {PP:80449531} (4 to 6), FOR CL560 ONLY, FOR FINLAND, ITALY, SWITZERLAND, BENELUX ONLY, SEE FIGURE 06.701
4	NSS	2	NOT SERVICED SEPARATELY, , FOR FINLAND, ITALY, SWITZERLAND, BENELUX ONLY, FOR CL560 ONLY
5	NSS	4	NOT SERVICED SEPARATELY, , FOR CL560 ONLY, FOR FINLAND, ITALY, SWITZERLAND, BENELUX ONLY
6	353078	2	BULB, {PP:80353078} 12V 4W, FOR FINLAND, ITALY, SWITZERLAND, BENELUX ONLY, FOR CL560 ONLY
7	418871	2	LAMP, {PP:80418871} (8 to 11), SEE FIGURE 06.701
8	398877	2	BULB, {PP:80398877} 12V 10W
9	470017	2	BULB, {PP:80470017} 12V 5W
10	NSS	2	NOT SERVICED SEPARATELY,
11	NSS	2	NOT SERVICED SEPARATELY,
12	86511042	4	SCREW, Cross Pan Hd, M4 x 16,
13	84814352	1	SUPPORT, , FOR FINLAND, ITALY, SWITZERLAND, BENELUX ONLY, BSN C319
13	84447491	1	SUPPORT, , FOR FINLAND, ITALY, SWITZERLAND, BENELUX ONLY, FOR CL560 ONLY, ASN D32
13	84814352	1	SUPPORT, , FOR CL560 ONLY, FOR UK, GERMANY, HUNGARY, FRANCE, SCANDINAVIA, RUSSIA ONLY
14	322355	4	WASHER, SPRING, Belleville, M4,
15	100012	4	NUT, M4, Cl 8,
16	86508568	4	BOLT, Hex, M6 x 16, 8.8, , FOR CL560 ONLY, FOR FINLAND, ITALY, SWITZERLAND, BENELUX ONLY
17	322357	8	WASHER, SPRING, Belleville, M6, , FOR FINLAND, ITALY, SWITZERLAND, BENELUX ONLY, FOR CL560 ONLY
18	353308	4	NUT, LOCK, M6 x 1, Cl 8, , FOR CL560 ONLY, FOR FINLAND, ITALY, SWITZERLAND, BENELUX ONLY
19	84441421	1	HARNESS, WIRE, , FOR FINLAND, ITALY, SWITZERLAND, BENELUX ONLY, SEE FIGURE 06.543, BSN C319
19	84448038	1	HARNESS, WIRE, , FOR FINLAND, ITALY, SWITZERLAND, BENELUX ONLY, FOR CL560 ONLY, SEE FIGURE 06.563, ASN D320
19	84437374	1	HARNESS, WIRE, , FOR CL560 ONLY, SEE FIGURE 06.535, FOR UK, GERMANY, HUNGARY, FRANCE, SCANDINAVIA, RUSSIA ONLY
20	16043224	2	BOLT, Hex, M8 x 16, 8.8, Full Thd,
21	89706690	2	NUT, M8, Cl 8,
22	441159	AR	CONNECTOR, WIRE, {PP:80441159}

06.209(01) STANDARD LIGHTS, FRONT

ссылка	Номер детали	Кол-во	Описание
23	84011215	1	LAMP ASSY, SIDE, RH, SEE FIGURE 06.701, ASN D320
24	84011216	1	LAMP ASSY, SIDE, LH, SEE FIGURE 06.701, ASN D320
25	418870	2	BULB, {PP:80418870} 12V 10W, ASN D320
26	322356	8	WASHER, LOCK, {PP:80322356} 5MM
27	86508813	4	NUT, M5, Cl 8,
28	86585709	2	SCREW, Cross Pan Hd, M5 x 10, M5x10
29	120098	2	BOLT, Hex, M5 x 20, 8.8, Full Thd,
30	NS	2	NOT SERVICED, RIVET
31	84818441	2	CLAMP,
20	16043224	2	BOLT, Hex, M8 x 16, 8.8, Full Thd,

06.210(01) ELECTRICAL EQUIPMENT, STRAW CHOPPER

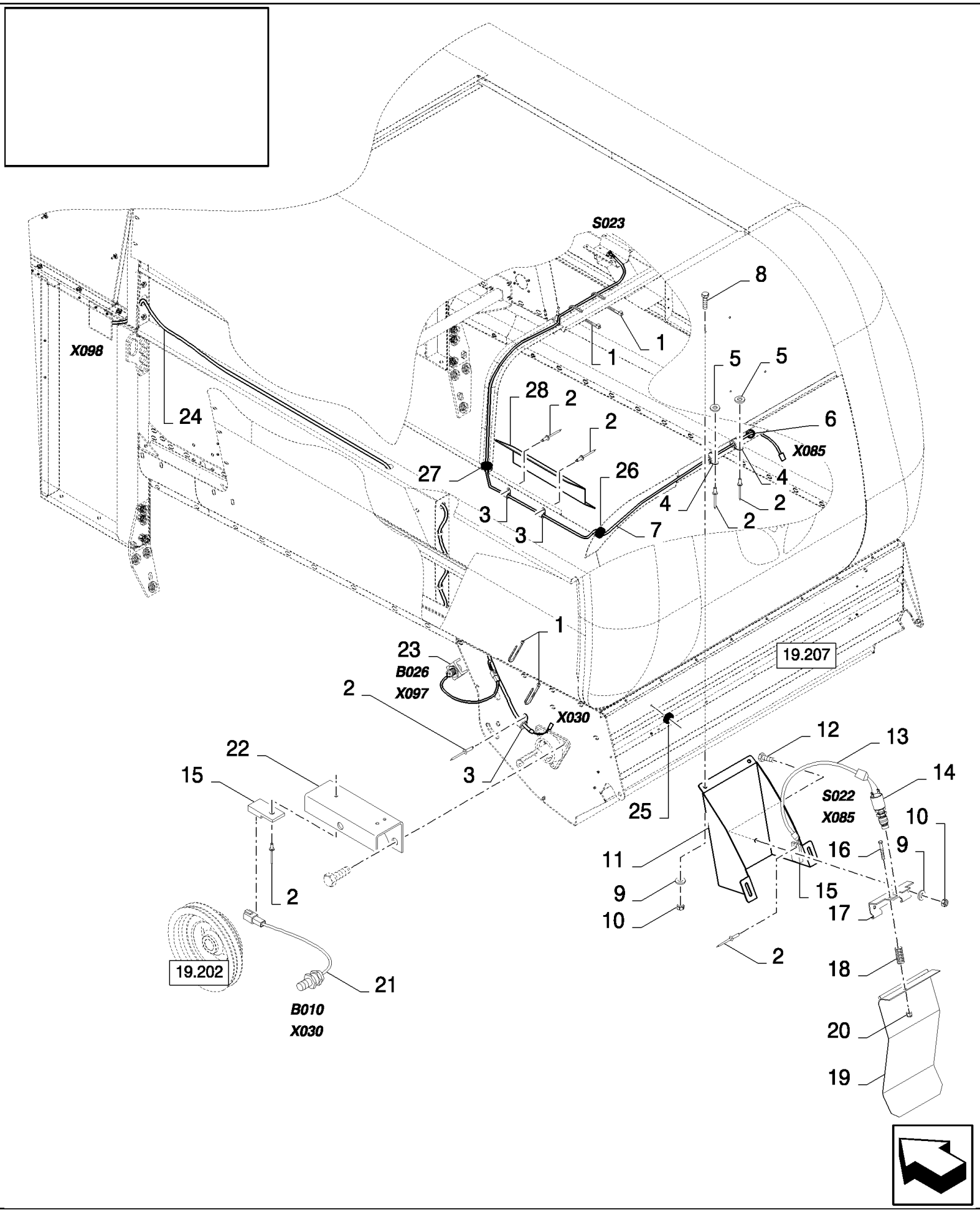

06.210(01) ELECTRICAL EQUIPMENT, STRAW CHOPPER

ссылка	Номер детали	Кол-во	Описание
1	89993154	3	CLAMP,
2	NS	7	NOT SERVICED, Rivet
3	9503928	3	CLAMP, {PP:89503928}
3	84818441	3	CLAMP, , FOR CL560 ONLY
4	9507807	2	CLAMP, {PP:89507807}
5	322356	2	WASHER, LOCK, {PP:80322356} 5MM
6	80307016	1	GROMMET,
7	84437319	1	HARNESS, WIRE, , SEE FIGURE 06.528
8	86512439	4	BOLT, CARRIAGE, Short NK, M6 x 16, Cl8.8, Full Thd,
9	322357	6	WASHER, SPRING, Belleville, M6,
10	15896221	6	NUT, M6, Cl 10,
11	84441249	1	SUPPORT,
12	86508568	2	BOLT, Hex, M6 x 16, 8.8,
13	84441663	1	HARNESS, WIRE, , SEE FIGURE 06.548
14	89818685	1	SWITCH, ASSY,
15	84058832	2	CLIP,
16	120056	1	BOLT, Hex, M6 x 50, 8.8,
17	84015986	1	HINGE,
18	84005450	1	SPRING,
19	84015983	1	PLATE, COVER,
20	353308	1	NUT, LOCK, M6 x 1, Cl 8,
21	84058861	1	SENSOR, , SEE FIGURE 06.701
22	84444723	1	BRACKET,
23	84058860	1	SENSOR, , SEE FIGURE 06.701
24	84444962	1	HARNESS, WIRE, , SEE FIGURE 06.555
25	448516	4	SPACER, {PP:80448516}
26	89514935	1	SHOCK ABSORBER,
27	129959	2	GROMMET, {PP:80129959}
28	84439603	1	SUPPORT,

06.211(01) WORK LIGHTS

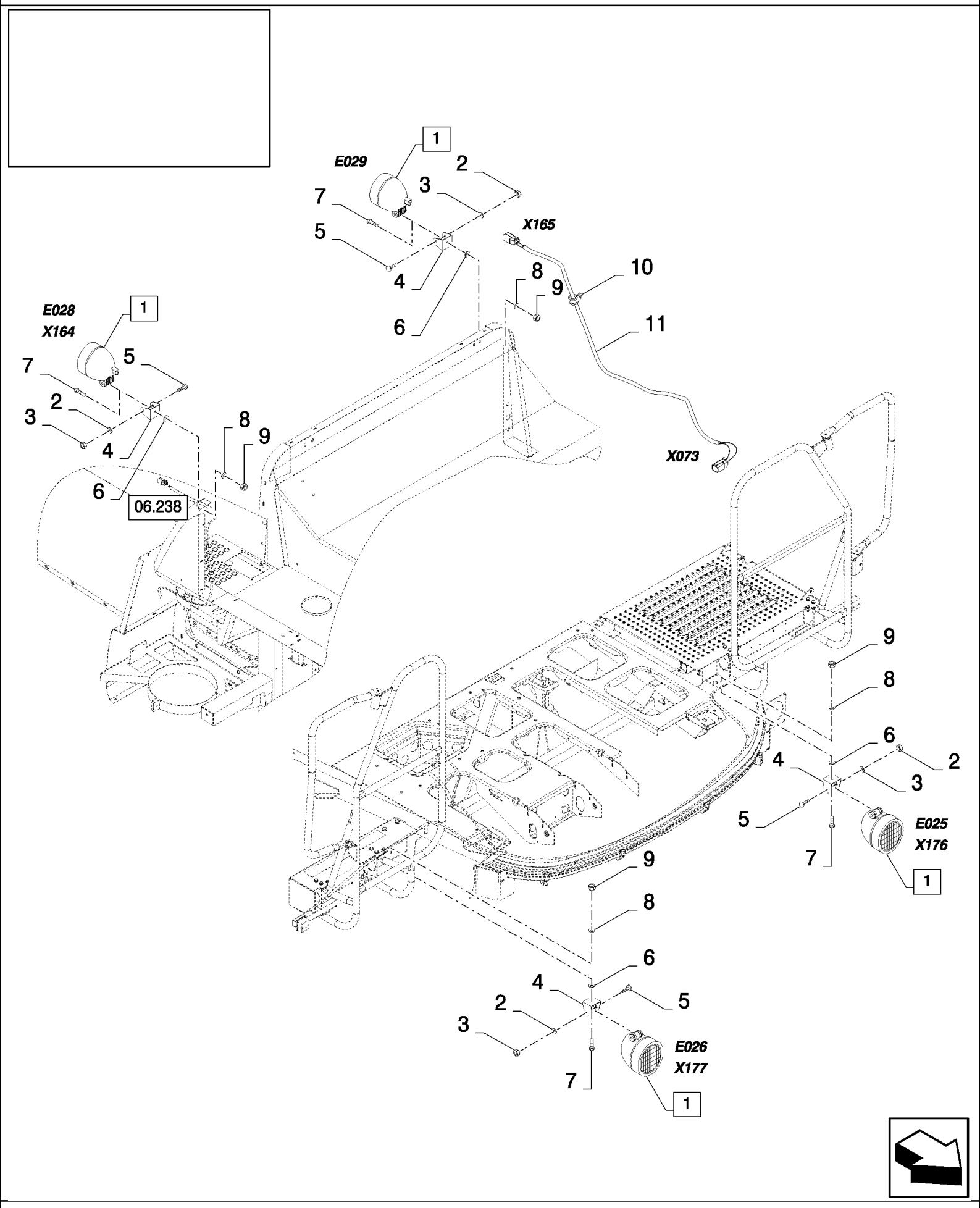

06.211(01) WORK LIGHTS

ссылка	Номер детали	Кол-во	Описание
1	84607497	4	LAMP, (2 to 6)
2	NSS	1	NOT SERVICED SEPARATELY,
3	NSS	1	NOT SERVICED SEPARATELY,
4	NSS	1	NOT SERVICED SEPARATELY,
5	NSS	1	NOT SERVICED SEPARATELY,
6	NSS	1	NOT SERVICED SEPARATELY,
7	43139	4	SCREW, {PP:80043139} M10x25
8	86511323	4	WASHER, M10 x 20 x 2,
9	100037	4	NUT, M10 x 1.5, Cl 8,
10	272535	5	CLAMP, {PP:80272535} 1/8", Insul, 1/4" Bolt,
11	84437327	1	HARNESS, WIRE, , SEE FIGURE 06.530

06.212(01) STANDARD MONITOR

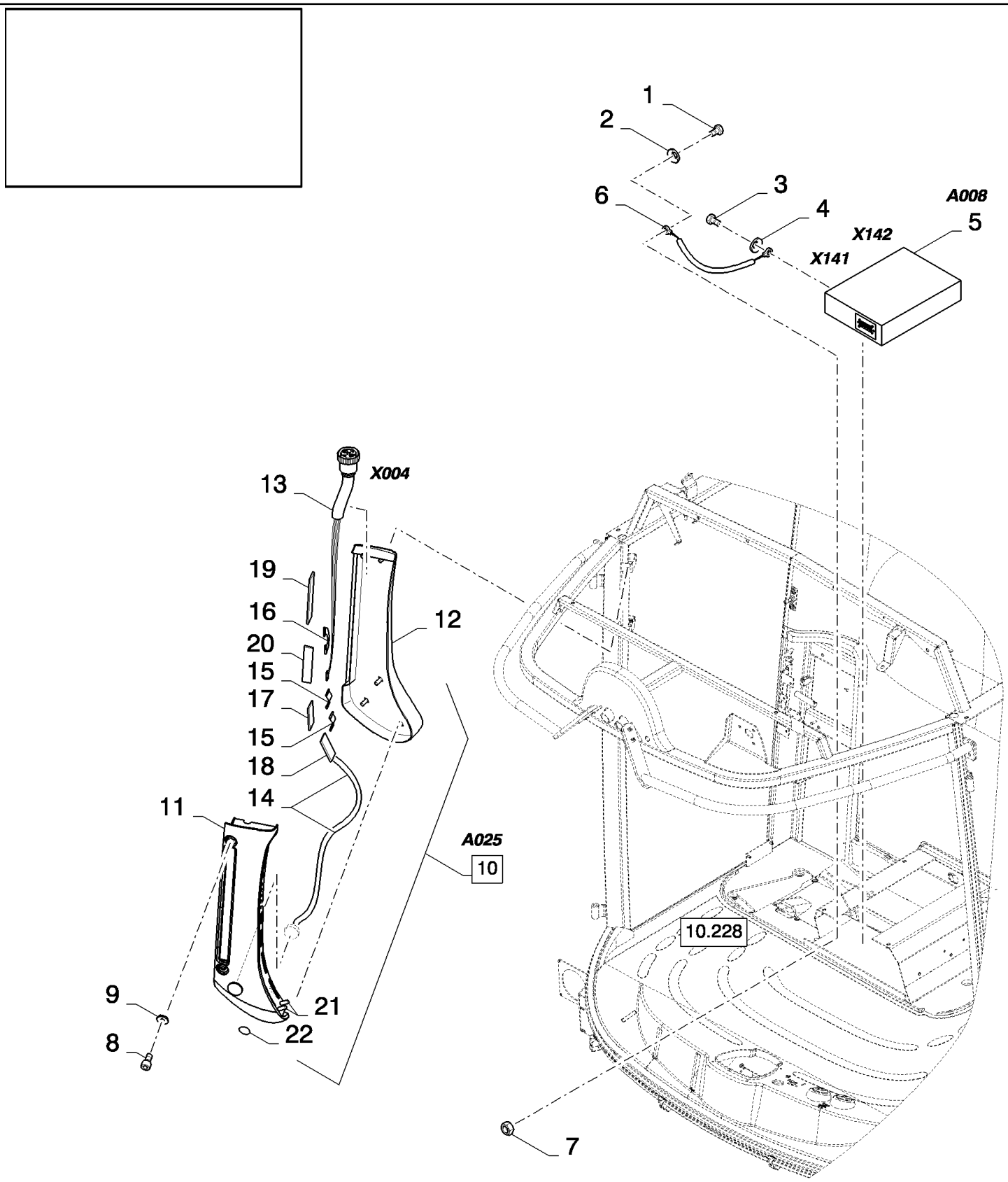

06.212(01) STANDARD MONITOR

ссылка	Номер детали	Кол-во	Описание
1	86508568	1	BOLT, Hex, M6 x 16, 8.8,
2	322357	1	WASHER, SPRING, Belleville, M6,
3	120104	1	BOLT, Hex, M8 x 20, 8.8,
4	322358	1	WASHER, SPRING, Belleville, M8,
5	84100247	1	ELECTRONIC UNIT, CONTROL,
6	84441529	1	HARNESS, WIRE, , SEE FIGURE 06.545
7	15896221	1	NUT, M6, Cl 10,
8	86512143	3	SCREW, Hex Soc Hd, M12 x 70, 12.9, M12x70
9	9824259	3	WASHER, {PP:89824259} M6 x 12 x 1.6,
10	84100246	1	MONITOR, CONTROL, , BSN C363
10	84818201	1	MONITOR, CONTROL, (11 to 21), BSN F364407
10	84459430	1	MONITOR, CONTROL, (11 to 21), BSN F408499
10	87390298	1	MONITOR, CONTROL, (11 to 22), ASN D500
11	84807802	1	CONSOLE, LH
12	84807803	1	CONSOLE, RH
13	84455608	1	HARNESS, WIRE, POSTMODULE
14	84455609	1	CABLE, BUZZER
15	84455610	2	CABLE,
16	84455611	1	CABLE,
17	84455612	1	BOARD, PRINTED CIRCUIT, HEADER HIGHT
18	84455613	1	BOARD, PRINTED CIRCUIT, GRAINLOSS
19	84455614	1	BOARD, PRINTED CIRCUIT, ALARM-DISPLAY
20	84455615	1	BOARD, PRINTED CIRCUIT, MONITOR CPU
21	84455616	1	PUSH BUTTON,
22	87352617	1	DECAL, , ASN D500

06.213(01) ELECTRICITY SELF LEVELLING CLEANING

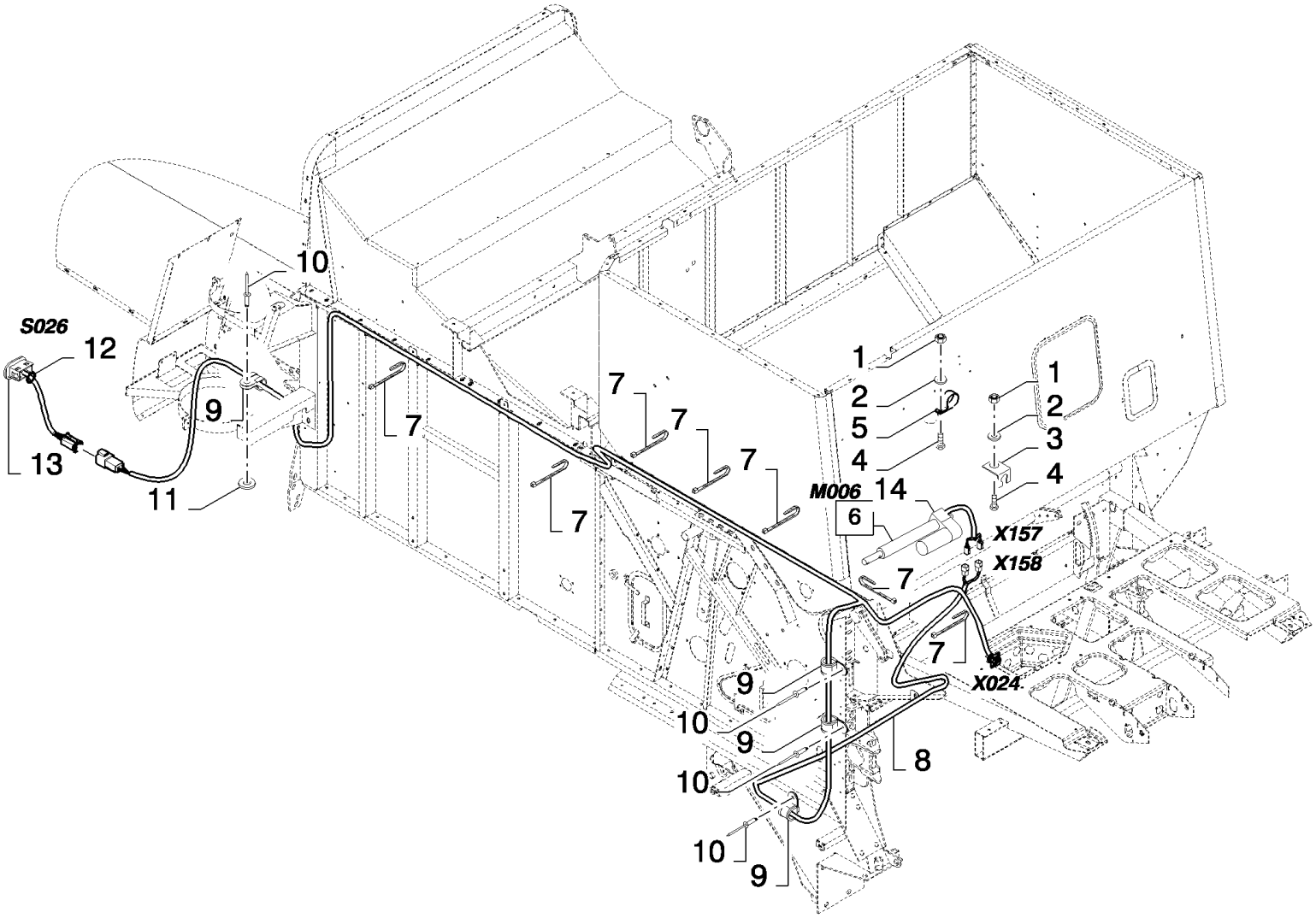

06.213(01) ELECTRICITY SELF LEVELLING CLEANING

ссылка	Номер детали	Кол-во	Описание
1	15896221	2	NUT, M6, Cl 10,
2	9824259	2	WASHER, M6 x 12 x 1.6,
3	89818116	1	BRACKET,
4	120100	2	BOLT, Hex, M6 x 20, 8.8,
5	9837692	1	CLAMP, {PP:89837692}
6	84818534	1	ACTUATOR, (14)
7	89993154	27	CLAMP,
8	84437153	1	HARNESS, WIRE, , SEE FIGURE 06.515, FOR CS520, CS540 ONLY
8	84437169	1	HARNESS, WIRE, , FOR CS640, CS660 ONLY, SEE FIGURE 06.516
9	9503929	8	CLAMP, {PP:89503929}
10	NS	8	NOT SERVICED, Rivet
11	322356	2	WASHER, LOCK, {PP:80322356} 5MM
12	86627352	1	CLAMP,
13	86627351	1	SWITCH,
14	89833225	1	POTENTIOMETER,

06.214(01) WORK LIGHTS

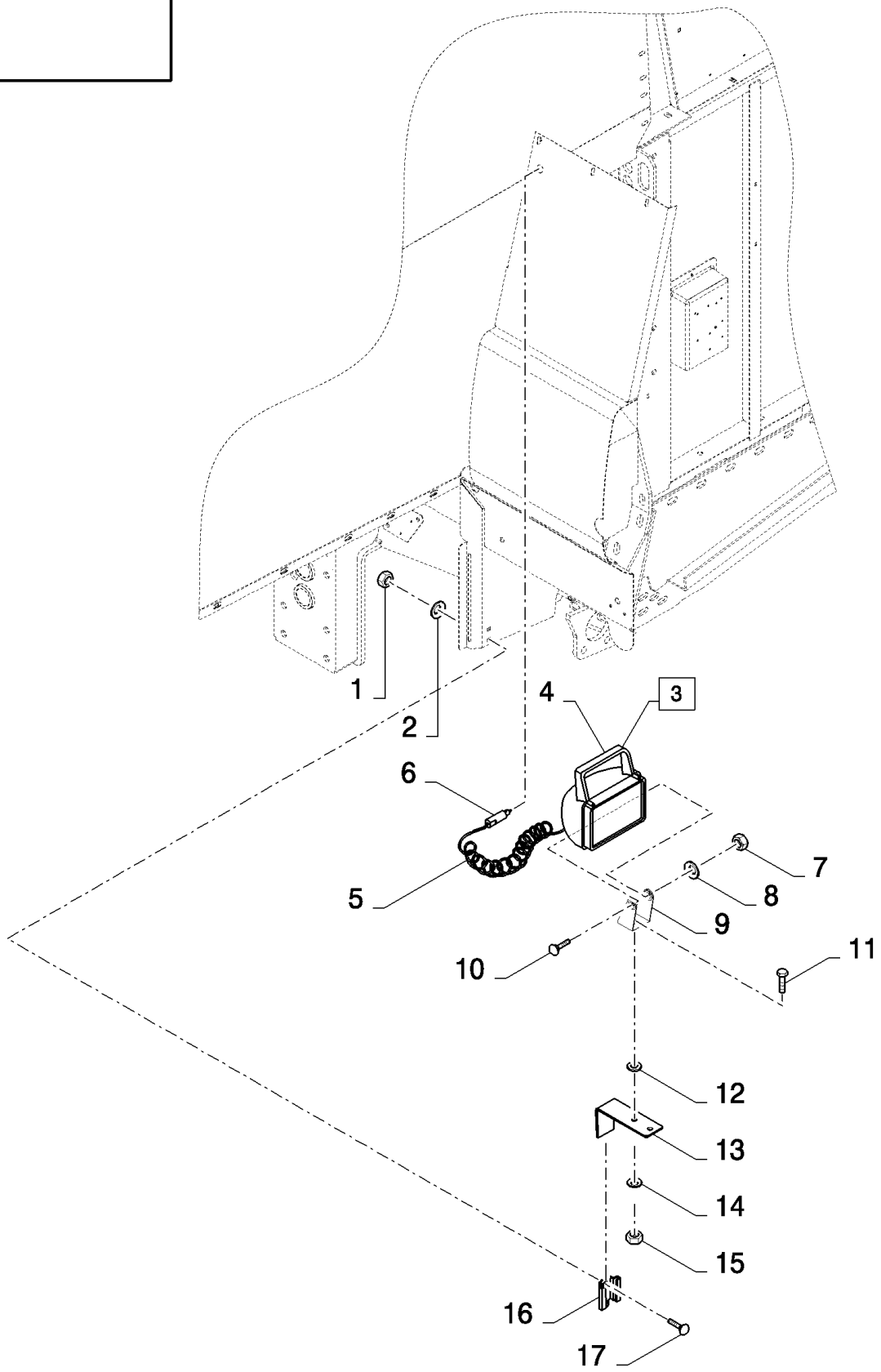

06.214(01) WORK LIGHTS

ссылка	Номер детали	Кол-во	Описание
1	89706690	4	NUT, M8, Cl 8,
2	322358	4	WASHER, SPRING, Belleville, M8,
3	84004176	1	LAMP, WORK, (4 to 6), SEE FIGURE 06.701
4	9837140	1	LAMP, {PP:89837140}
5	264517	1	HARNESS, WIRE, {PP:80264517} , SEE FIGURE 06.501
6	353969	1	CONNECTOR, ELEC, {PP:80353969}
7	NSS	1	NOT SERVICED SEPARATELY,
8	NSS	1	NOT SERVICED SEPARATELY,
9	NSS	1	NOT SERVICED SEPARATELY,
10	NSS	1	NOT SERVICED SEPARATELY,
11	NSS	1	NOT SERVICED SEPARATELY,
12	NSS	1	NOT SERVICED SEPARATELY,
13	9813909	1	SUPPORT, {PP:89813909}
14	140045	1	WASHER, SPRING, Belleville, M10,
15	100016	1	NUT, M10, Cl 8,
16	9837606	2	CLIP, {PP:89837606}
17	86507486	4	BOLT, CARRIAGE, Short NK, M8 x 20, Cl8.8, Full Thd,

06.215(01) STRAW WALKER : PROTECTION

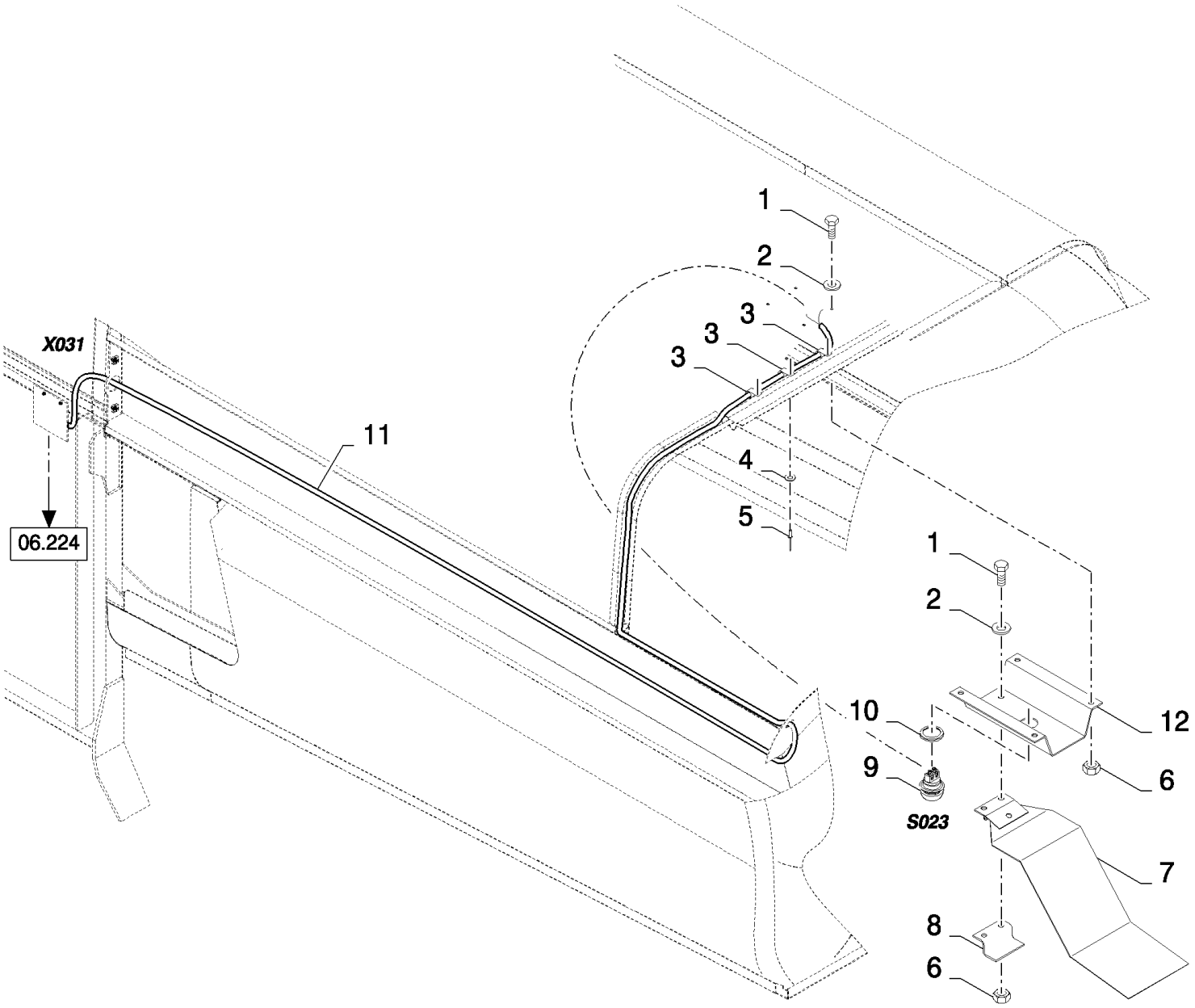

06.215(01) STRAW WALKER : PROTECTION

ссылка	Номер детали	Кол-во	Описание
1	86508568	6	BOLT, Hex, M6 x 16, 8.8,
2	322357	6	WASHER, SPRING, Belleville, M6,
3	9507807	3	CLAMP, {PP:89507807}
4	322356	3	WASHER, LOCK, {PP:80322356} 5MM
5	NS	3	NOT SERVICED, Rivet
6	15896221	6	NUT, M6, Cl 10,
7	417790	1	SUPPORT, {PP:80417790}
8	417793	1	SUPPORT, {PP:80417793}
9	335378	1	PUSH BUTTON, {PP:80335378}
10	397986	1	CUP, {PP:80397986}
11	84437313	1	HARNESS, WIRE, , SEE FIGURE 06.527
12	417792	1	SUPPORT, {PP:80417792}

06.216(01) SWITCHES IN CAB ROOF

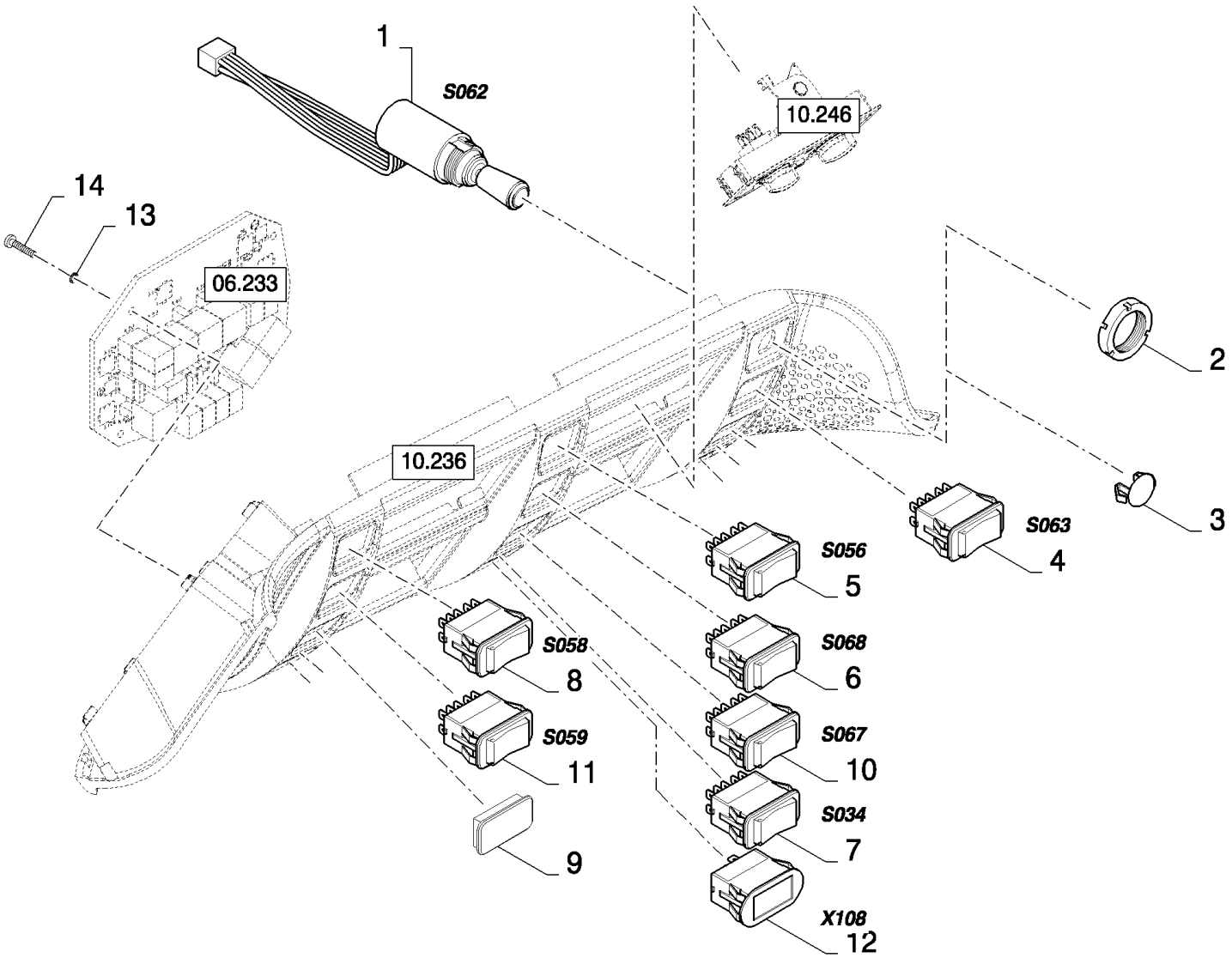

06.216(01) SWITCHES IN CAB ROOF

ссылка	Номер детали	Кол-во	Описание
1	84400393	1	SWITCH, (2), MIRROR ADJUSTMENT
2	NSS	1	NOT SERVICED SEPARATELY,
3	84814471	1	PLUG,
4	84320661	1	SWITCH, , MIRROR TUMBLER, FOR GERMANY ONLY
5	84320666	1	SWITCH, , WORKLIGHTS TUMBLER
6	84320667	1	SWITCH, , HEADLIGHTS TUMBLER
7	84320669	1	SWITCH, , REVOLVING FLASHING LIGHTS TUMBLER
8	84320664	1	SWITCH, , WINDSCREEN WIPER TUMBLER
9	84807276	10	COVER,
10	84320668	1	SWITCH, , STUBBLE LIGHTS TUMBLER
11	84320665	1	SWITCH, , WINDSCREEN WASHER ROCKER
12	84067961	1	LAMP, CEILING,
13	322355	5	WASHER, SPRING, Belleville, M4,
14	86511042	5	SCREW, Cross Pan Hd, M4 x 16,
14	412064	5	SCREW, Hex, M4 x 16, 8.8, Full Thd, M6x16

06.217(01) CAB, MAIN WIRING HARNESS

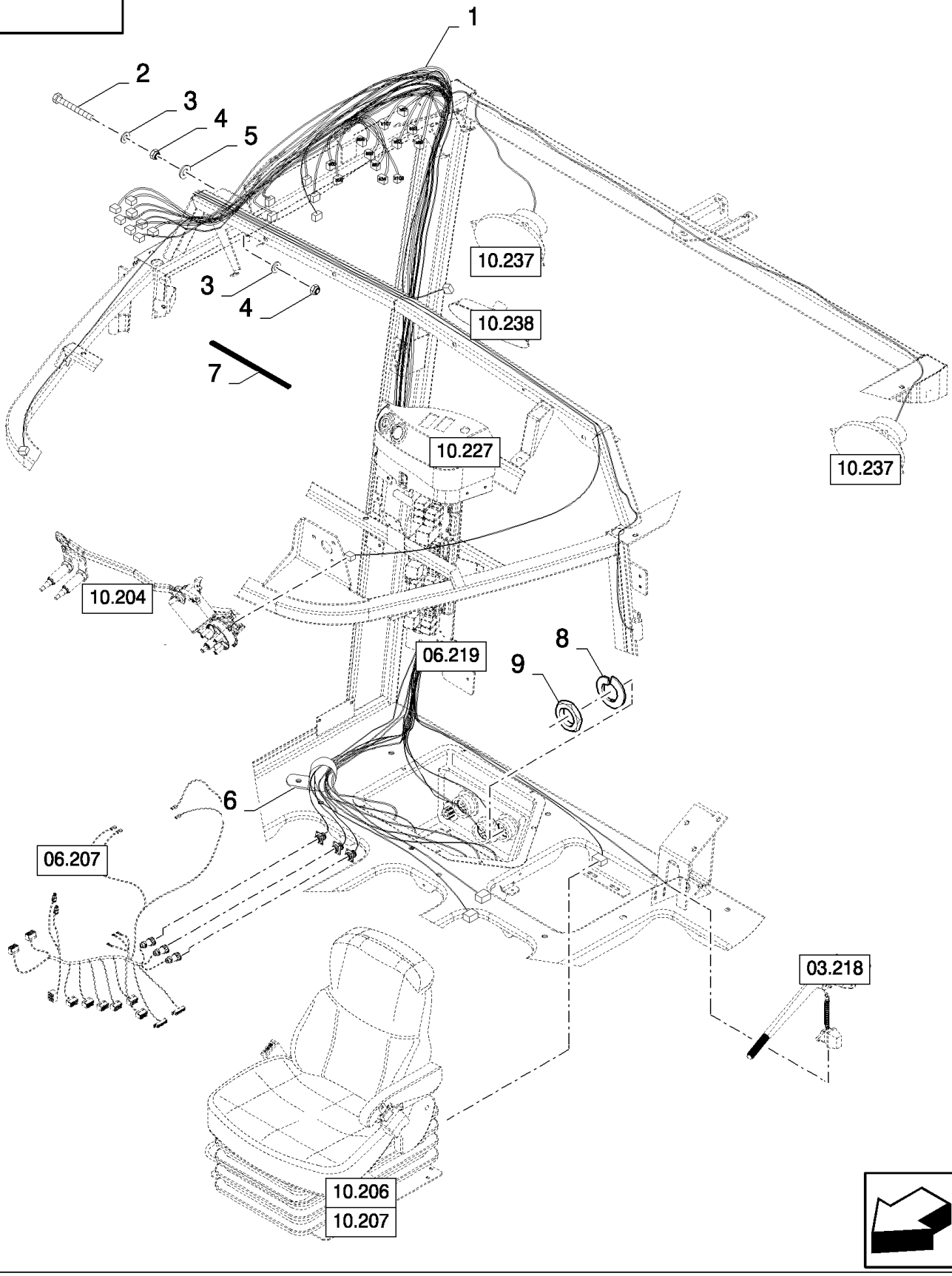

06.217(01) CAB, MAIN WIRING HARNESS

ссылка	Номер детали	Кол-во	Описание
1	84433641	1	HARNESS, WIRE, , SEE FIGURE 06.505 01/02, BSN C409
1	84457770	1	HARNESS, WIRE, , SEE FIGURE 06.505 10/11, BSN F410479
1	84462157	1	HARNESS, WIRE, , SEE FIGURE 06.505 21/22, BSN F480491
1	87350993	1	HARNESS, WIRE, , SEE FIGURE 06.505 31/32, ASN D492
2	86977790	1	BOLT, Hex, M6 x 45, 8.8,
3	322357	2	WASHER, SPRING, Belleville, M6,
4	15896221	2	NUT, M6, Cl 10,
5	9824259	1	WASHER, M6 x 12 x 1.6,
6	86628564	1	CLAMP, 1 1/4", Insul, 3/8" Bolt,
7	80401310	1	PROFILE, L=0.5M
8	84607513	9	WASHER, LOCK, , ASN D480
9	86619907	9	NUT, , ASN D480

06.218(01) CAB, MAIN WIRING HARNESS

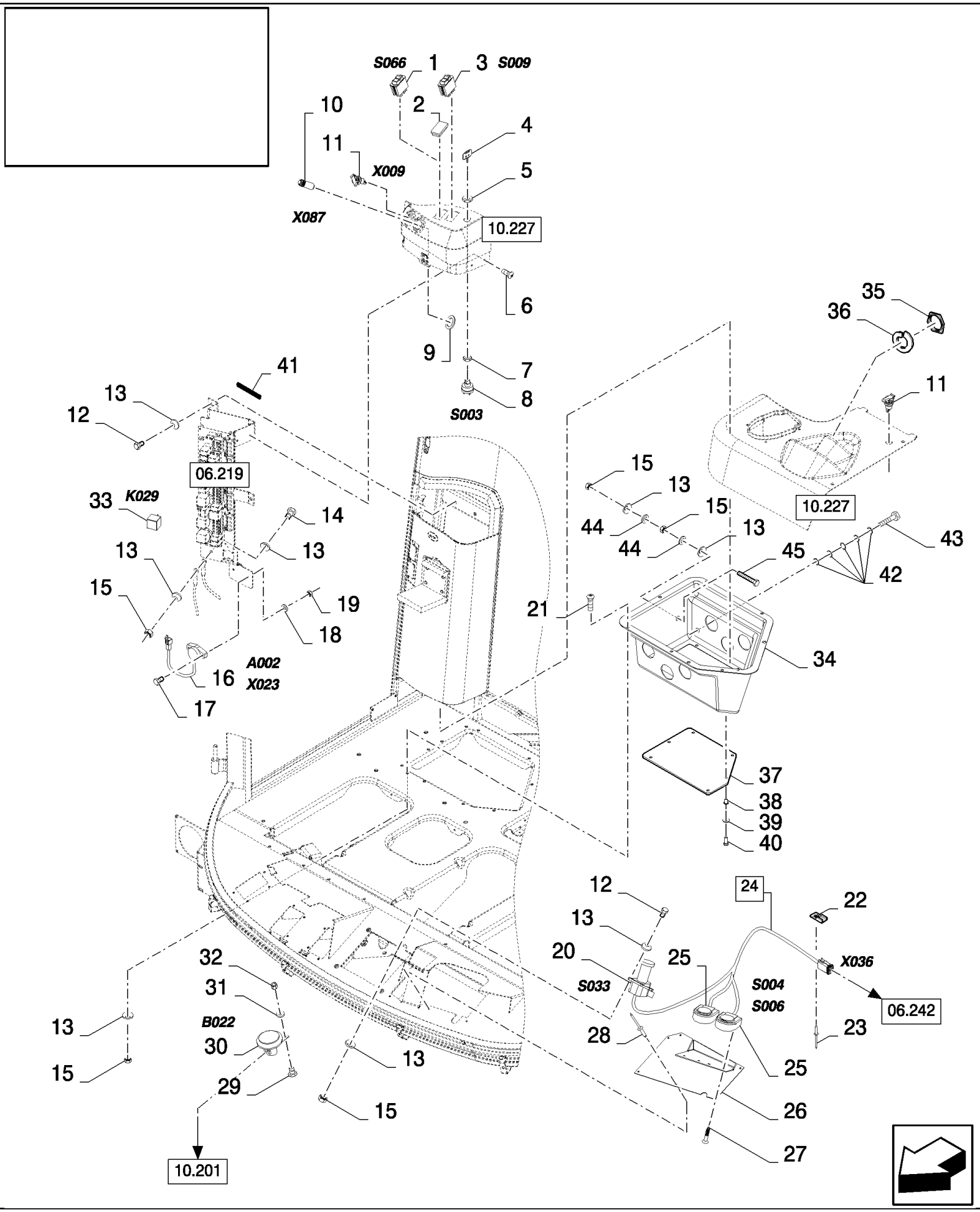

06.218(01) CAB, MAIN WIRING HARNESS

ссылка	Номер детали	Кол-во	Описание
1	84320653	1	SWITCH, SWITCH PREHEATING, FOR RUSSIA ONLY
2	84807276	1	COVER,
3	84320652	1	SWITCH, ENGINE PROTECTION
4	89995262	2	KEY, IGNITION,
5	83903198	1	NUT,
6	86511042	3	SCREW, Cross Pan Hd, M4 x 16,
7	NSS	1	NOT SERVICED SEPARATELY,
8	83964212	1	SWITCH, IGNITION, (7)
9	NSS	1	NOT SERVICED SEPARATELY,
10	84038796	1	LIGHTER, CIGARETTE, (9)
11	374418	1	SOCKET, POWER, {PP:80374418} , BSN C415
11	374418	2	SOCKET, POWER, {PP:80374418} , ASN D416
12	86508568	3	BOLT, Hex, M6 x 16, 8.8,
13	322357	15	WASHER, SPRING, Belleville, M6,
14	120100	1	BOLT, Hex, M6 x 20, 8.8,
15	15896221	11	NUT, M6, Cl 10,
16	86556530	1	SENSOR, , SELF LEVELING, SEE FIGURE 06.701, BSN C363
16	87026294	1	SENSOR, , SEE FIGURE 06.701, SELF LEVELING, ASN D364
17	412255	2	BOLT, Hex, M4 x 20, 8.8, Full Thd, , SELF LEVELING
18	322355	2	WASHER, SPRING, Belleville, M4, , SELF LEVELING
19	100012	2	NUT, M4, Cl 8, , SELF LEVELING
20	84320767	1	SWITCH, UNLOADING AUGER
21	86511829	8	SCREW, Cross Pan Hd, M6 x 16,
22	84058832	1	CLIP,
23	NS	1	NOT SERVICED, Rivet
24	84807839	1	PEDAL, (25) REEL, SEE FIGURE 06.701
25	9833626	2	PEDAL, {PP:89833626} REEL
26	84807919	1	SUPPORT, , BSN C363
26	84807918	1	SUPPORT, , ASN D364
27	281037	4	SCREW, SELF TAPPING, {PP:80281037} Cross Pan Hd, #4 x 3/8", , BSN C363
27	87035701	4	SCREW, SELF TAPPING, Hex Wash Hd, #4 x 3/4", , ASN D364
28	NS	6	NOT SERVICED, Rivet
29	43129	1	BOLT, Hex, M8 x 40, 8.8,
30	80354374	1	HORN,
31	322358	1	WASHER, SPRING, Belleville, M8,
32	89706690	1	NUT, M8, Cl 8,
33	86529089	1	RELAY, HEADER REVERSER, FOR CS520 ONLY, ASN D376
33	86529089	1	RELAY, , FOR CL560 ONLY, BSN C375
33	84000651	1	RELAY, HEADER REVERSER, FOR CS520 ONLY, BSN C375
34	84448112	1	JUNCTION BOX, , BSN C479
34	87055523	1	JUNCTION BOX, , ASN D480
35	84443830	3	NUT, , BSN C415
35	636666	3	NUT, , BSN F416479
35	86619907	3	NUT, , ASN D480
36	636665	3	WASHER, LOCK, , ASN D416

06.218(01) CAB, MAIN WIRING HARNESS

ссылка	Номер детали	Кол-во	Описание
37	84807744	1	COVER,
38	84814233	6	FASTENER, M4
39	322355	6	WASHER, SPRING, Belleville, M4,
40	412064	6	SCREW, Hex, M4 x 16, 8.8, Full Thd,
41	80401310	1	PROFILE, L=0.47M
42	412649	5	WASHER, SPRING, Belleville, M6, , ASN D480
43	120101	1	BOLT, Hex, M6 x 30, 8.8, Full Thd, , ASN D480
44	86588450	2	WASHER, M6, , ASN D480
45	120102	1	BOLT, Hex, M6 x 40, 8.8, Full Thd, , ASN D480

06.219(01) PRINTED CIRCUIT

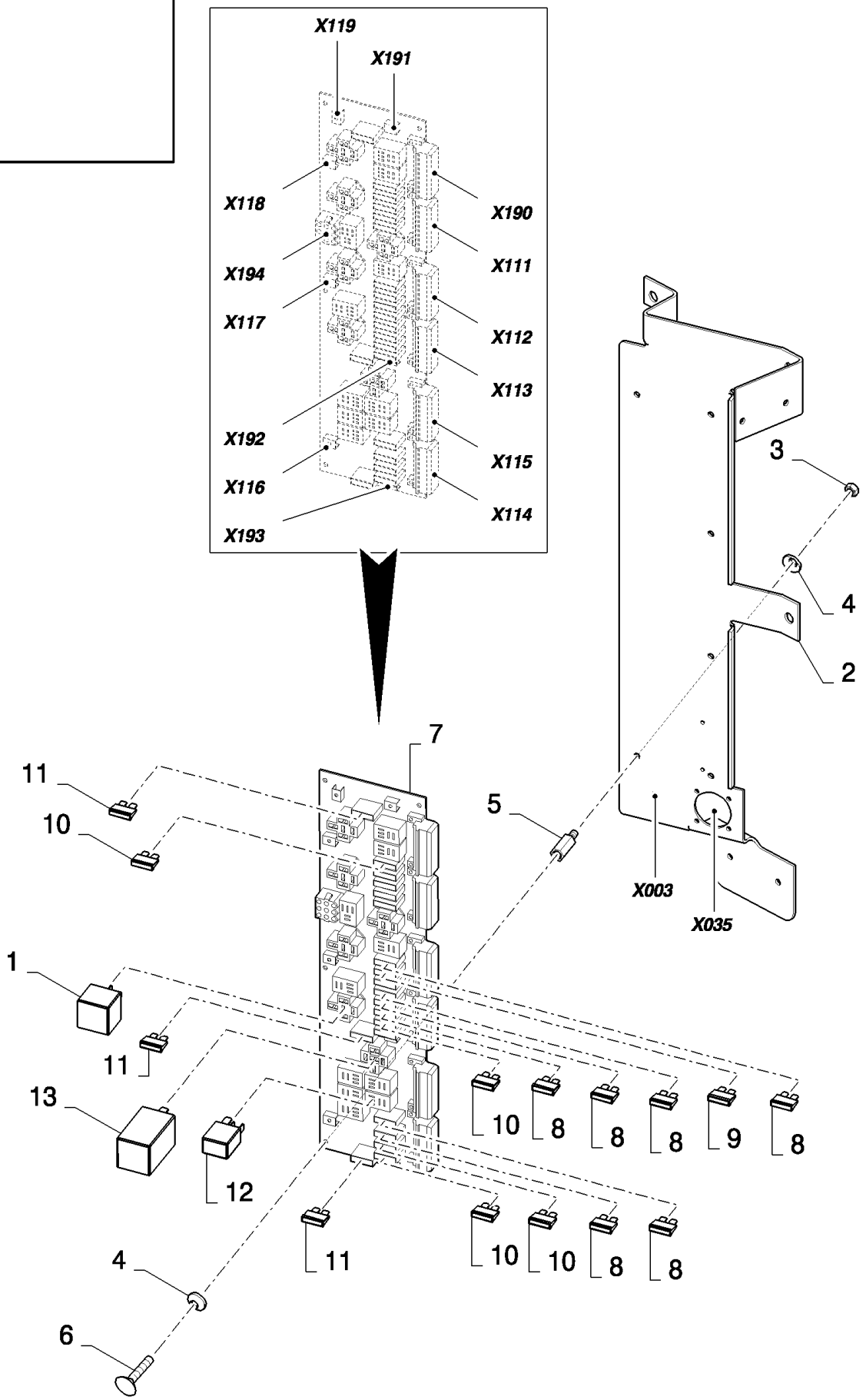

06.219(01) PRINTED CIRCUIT

ссылка	Номер детали	Кол-во	Описание
1	84000651	5	RELAY,
2	84433435	1	SUPPORT,
3	100012	7	NUT, M4, Cl 8,
4	322355	14	WASHER, SPRING, Belleville, M4,
5	84814397	7	BUSHING,
6	86511823	7	SCREW, Cross Pan Hd, M4 x 8, M4x8
7	84320283	1	BOARD, PRINTED CIRCUIT, , BSN C363
7	84452526	1	BOARD, PRINTED CIRCUIT, , ASN D364
8	9811773	AR	FUSE, {PP:89811773} 10A
9	9504310	AR	FUSE, {PP:89504310} 25A
10	9504308	AR	FUSE, {PP:89504308} 15A
11	84038658	AR	FUSE, 40A
12	86509590	10	RELAY,
13	9813500	1	FLASHER UNIT, {PP:89813500}

06.220(01) PNEUMATIC UNIT - C375

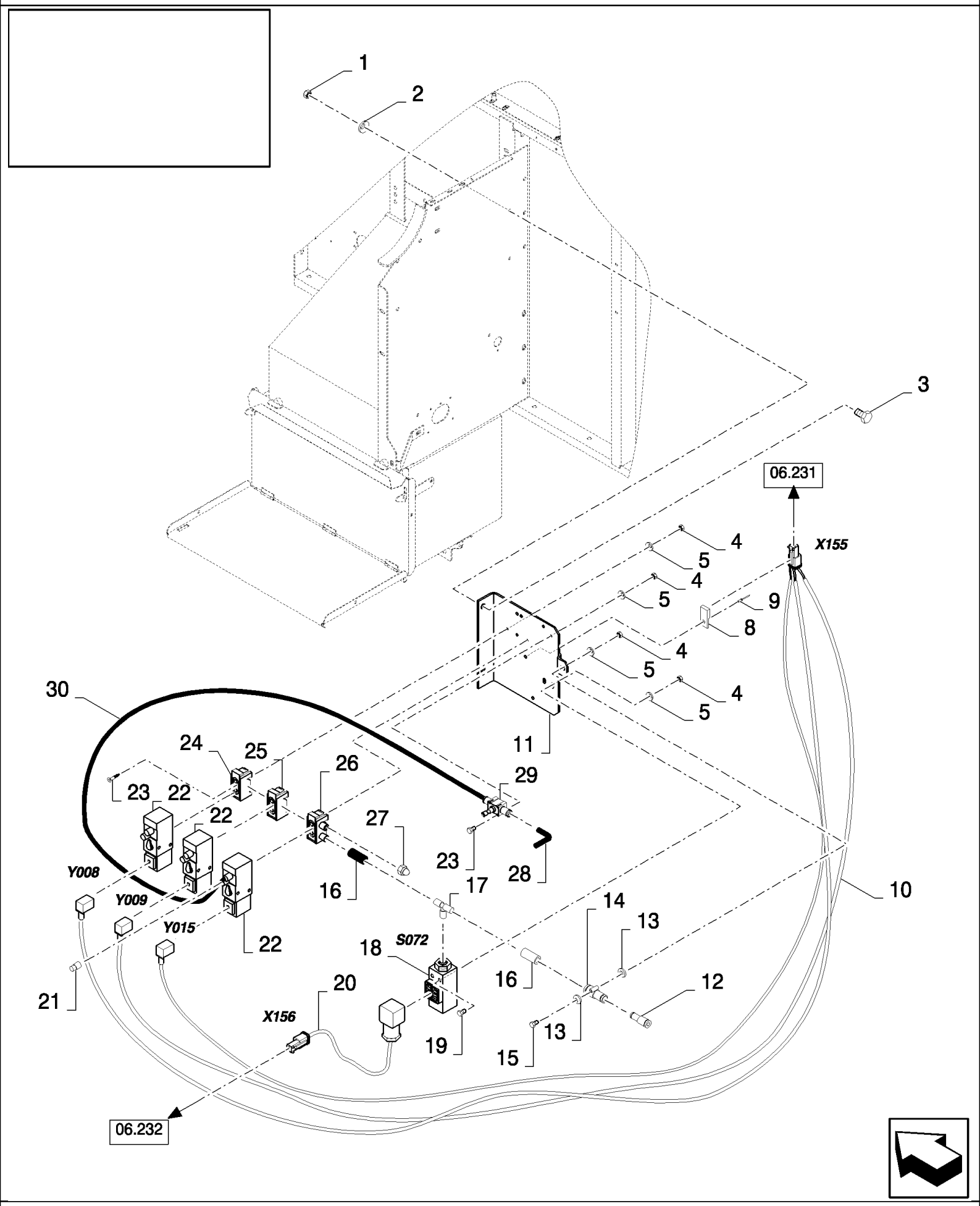

06.220(01) PNEUMATIC UNIT - C375

ссылка	Номер детали	Кол-во	Описание
1	89706690	2	NUT, M8, Cl 8,
2	322358	2	WASHER, SPRING, Belleville, M8,
3	120104	2	BOLT, Hex, M8 x 20, 8.8,
3	16043224	2	BOLT, Hex, M8 x 16, 8.8, Full Thd,
4	86508812	4	NUT, M3, Cl 8,
5	412547	4	WASHER, {PP:80412547} Serr, M3, 3MM
6	322355	3	WASHER, SPRING, Belleville, M4,
7	86509264	3	NUT, M4, Cl 10, M4
8	84058832	1	CLIP,
9	NS	1	NOT SERVICED, Rivet
10	84441546	1	HARNESS, WIRE, , SEE FIGURE 06.546 01
11	84441247	1	PLATE,
12	84818058	1	CONNECTOR, HYD.,
13	89824840	2	WASHER, 4MM
14	84817070	1	CONNECTOR, HYD.,
15	86511825	1	SCREW, Cross Pan Hd, M4 x 30, M4x30
16	NS	2	NOT SERVICED,
17	84817071	1	CONNECTOR, HYD.,
18	84814556	1	SENSOR,
19	86585708	2	SCREW, Cross Pan Hd, M4 x 40,
20	84441573	1	HARNESS, WIRE, , SEE FIGURE 06.547
21	84817072	1	PLUG,
22	84814555	3	VALVE,
23	301571	4	SCREW, {PP:80301571} M3x25
24	84817067	1	VALVE, PNEUMATIC,
25	84817066	1	VALVE, PNEUMATIC,
26	84817068	1	VALVE, PNEUMATIC,
27	84817069	1	VALVE, DAMPING,
28	84817073	1	CONNECTOR, HYD.,
29	84814557	1	VALVE,
30	NS	1	NOT SERVICED,

06.220(02) PNEUMATIC UNIT - D376

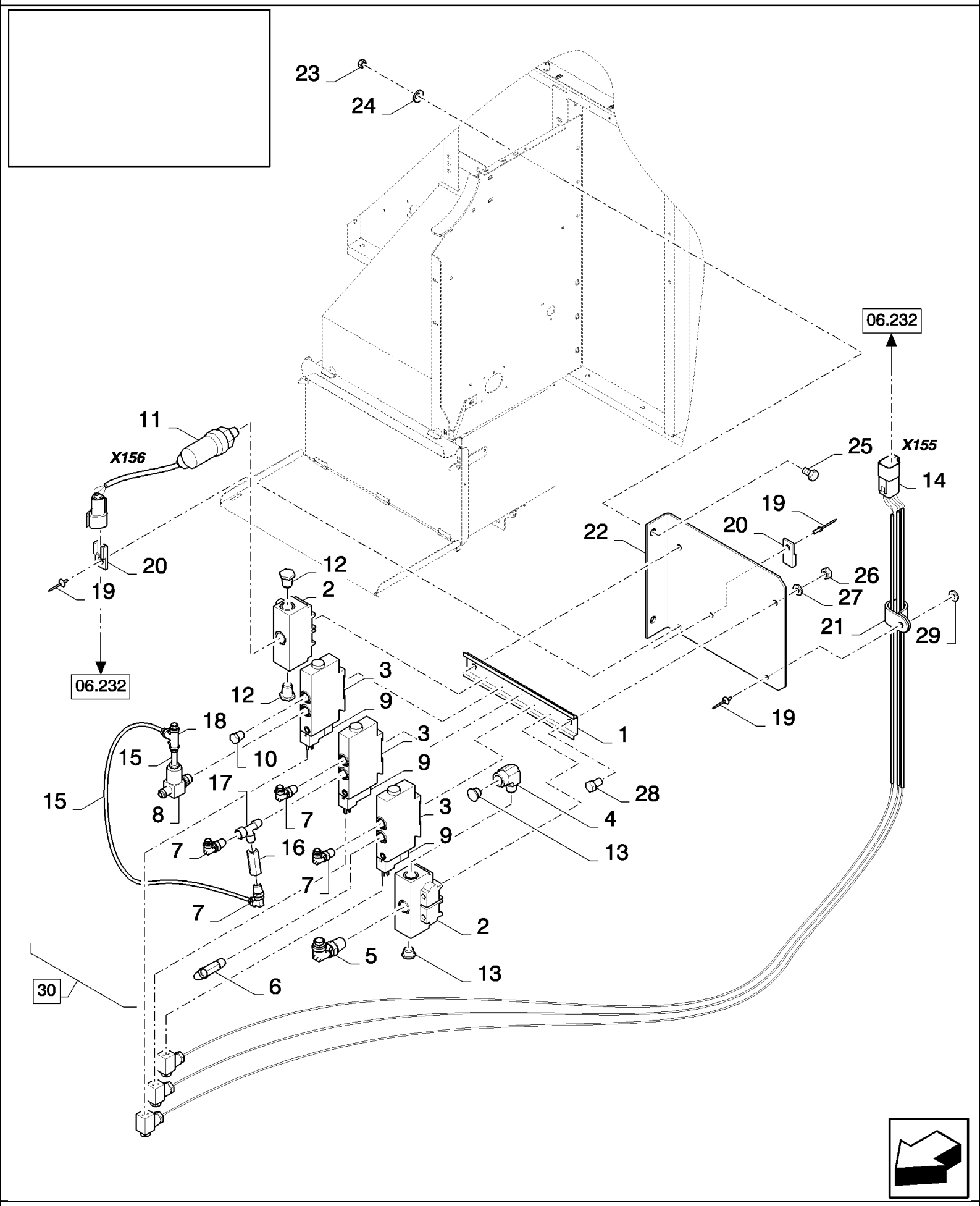

06.220(02) PNEUMATIC UNIT - D376

ссылка	Номер детали	Кол-во	Описание
1	87038384	1	GUIDE,
2	87038385	2	PNEUMATIC UNIT,
3	87038386	3	VALVE, PNEUMATIC,
4	87038387	1	ELBOW,
5	87038388	1	ELBOW,
6	87038389	1	ELBOW, , BSN C419
6	84461381	1	EXTENSION, , ASN D420
7	87038390	4	ELBOW,
8	87038391	1	GOVERNOR, SPEED,
9	87038392	3	SPOOL,
10	87038393	1	CAP, INTRODUCTION,
11	87038394	1	SWITCH, PRESSURE, , BSN C443
11	87349491	1	SWITCH, PRESSURE, , ASN D444
12	87038395	2	CAP, INTRODUCTION,
13	87038396	2	PLUG,
14	87038397	1	HARNESS, WIRE, , SEE FIGURE 06.546 02
15	84607921	AR	HOSE,
16	84454411	1	VALVE, RESTRICTOR,
17	84454410	1	CONNECTION, 3 WAY,
18	84454412	1	CONNECTION, 3 WAY,
19	445394	2	RIVET, Pop, M4.8 x 12.7,
20	84058832	2	CLIP,
21	84818442	1	CLAMP,
22	84453491	1	PLATE,
23	89706690	2	NUT, M8, Cl 8,
24	322358	2	WASHER, SPRING, Belleville, M8,
25	16043224	2	BOLT, Hex, M8 x 16, 8.8, Full Thd,
26	15896221	2	NUT, M6, Cl 10,
27	322357	2	WASHER, SPRING, Belleville, M6,
28	86508568	2	BOLT, Hex, M6 x 16, 8.8,
29	322356	1	WASHER, LOCK, 5MM
30	84453496	1	PNEUMATIC UNIT, , BSN F376419
30	84460708	1	VALVE, PNEUMATIC, , BSN F420443
30	87349493	1	VALVE, PNEUMATIC, , ASN D444

06.221(01) ENGINE ELECTRICITY

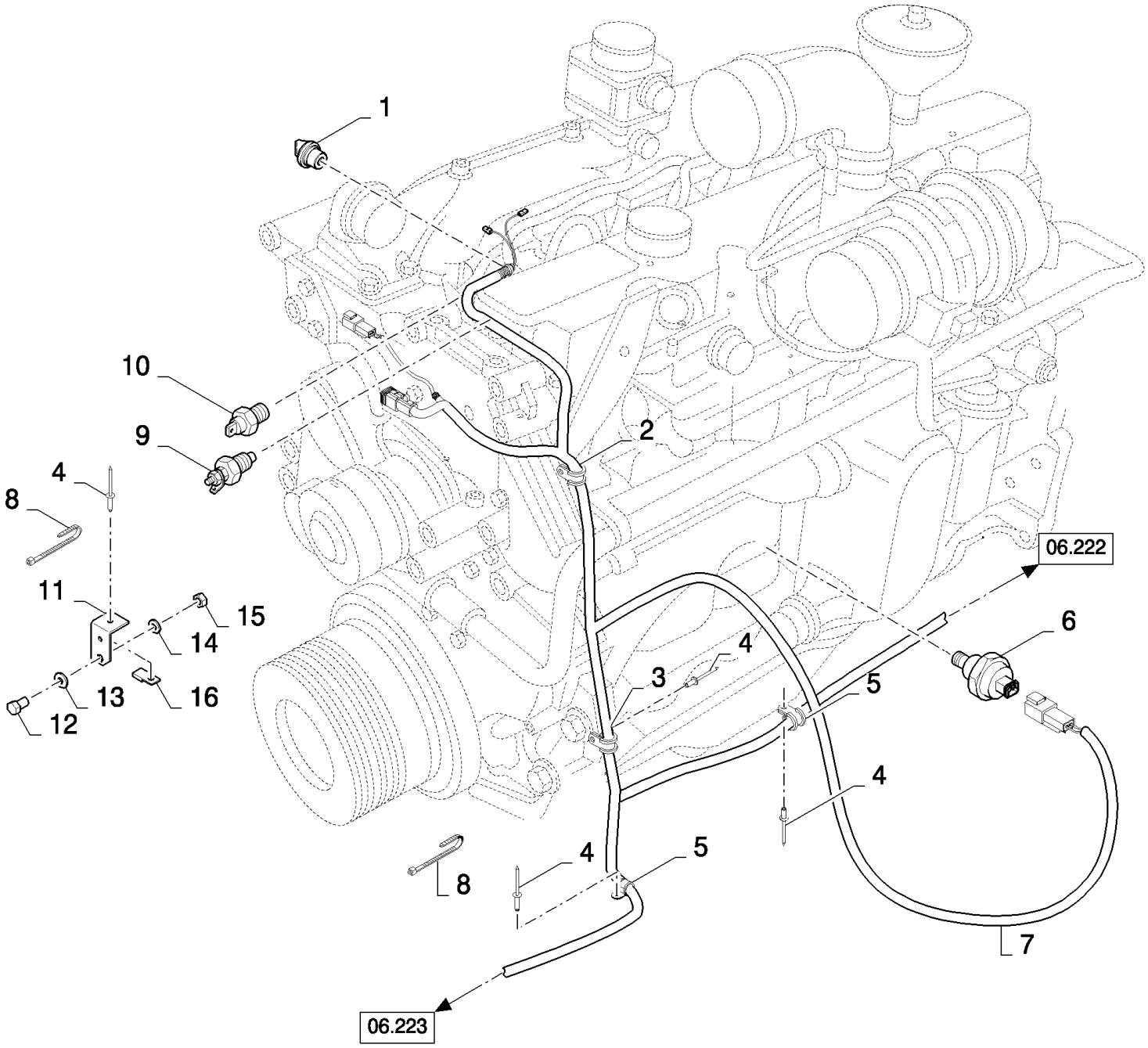

CS660 COMBINE BASE UNIT (1/03-) - Electrical System

06.221(01) ENGINE ELECTRICITY

ссылка	Номер детали	Кол-во	Описание
1	84043184	1	SENDER UNIT,
2	9837692	1	CLAMP, {PP:89837692}
3	84818443	2	CLAMP,
4	NS	8	NOT SERVICED, Rivet
5	86628564	6	CLAMP, 1 1/4", Insul, 3/8" Bolt,
6	84053656	1	SWITCH, PRESSURE,
7	84435876	1	HARNESS, WIRE, , SEE FIGURE 06.512 01, BSN C375
7	84454070	1	HARNESS, WIRE, , SEE FIGURE 06.512 02, BSN F376479
7	84462146	1	HARNESS, WIRE, , SEE FIGURE 06.512 03, ASN D480
8	89993154	2	CLAMP,
9	84041953	1	SENDER UNIT,
10	84041954	1	SWITCH, THERMOSTATIC,
11	84439595	1	BRACKET,
12	86977789	1	BOLT, Hex, M6 x 35, 8.8,
13	9824259	1	WASHER, M6 x 12 x 1.6,
14	322357	1	WASHER, SPRING, Belleville, M6,
15	15896221	1	NUT, M6, Cl 10,
16	84058832	1	CLIP,

06.222(01) ENGINE ELECTRICITY

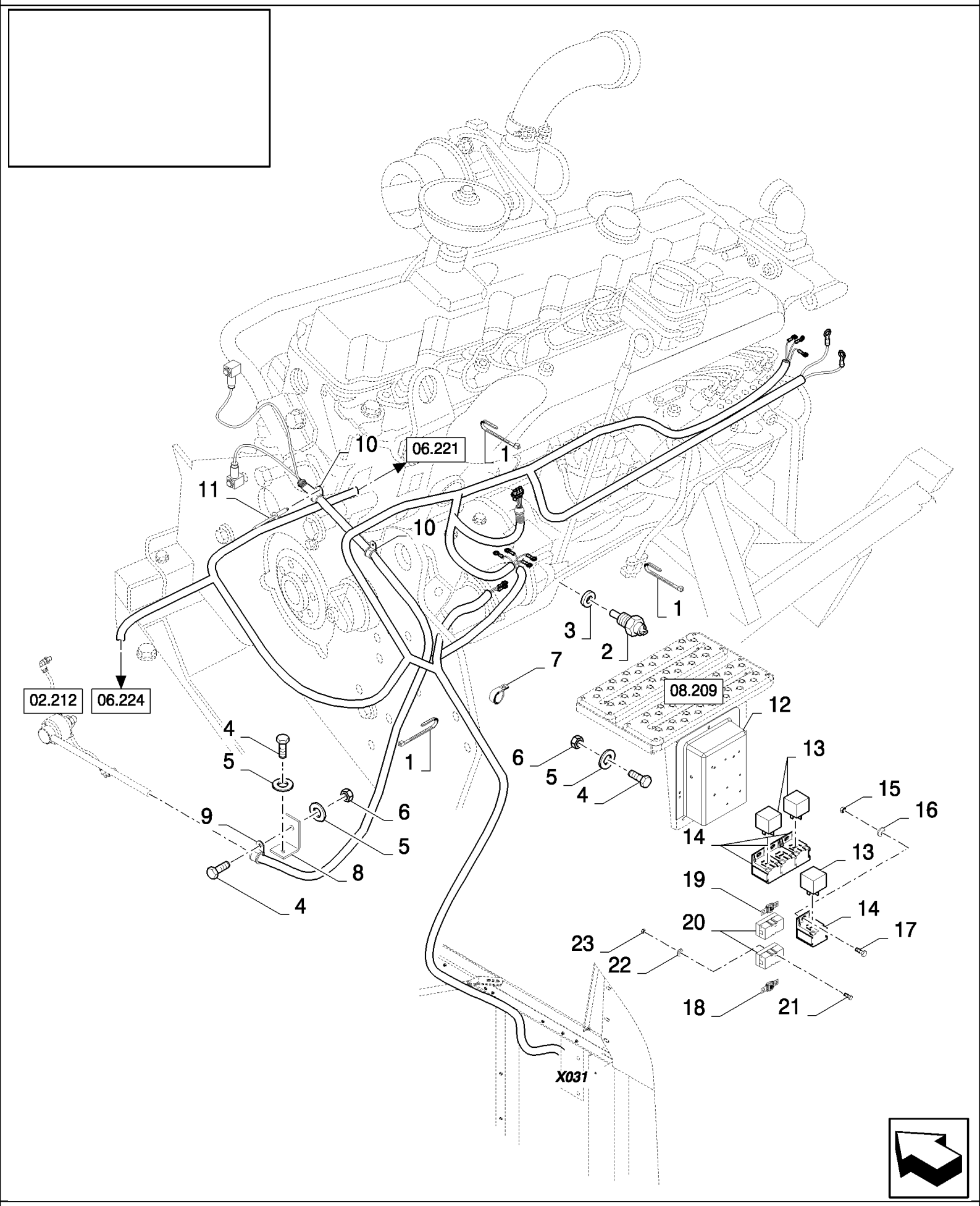

CS660 COMBINE BASE UNIT (1/03-) - Electrical System

06.222(01) ENGINE ELECTRICITY

ссылка	Номер детали	Кол-во	Описание
1	89993154	10	CLAMP,
2	9818128	1	SWITCH, THERMOSTATIC, {PP:89818128}
3	84038227	1	GASKET,
4	120100	5	BOLT, Hex, M6 x 20, 8.8,
5	322357	5	WASHER, SPRING, Belleville, M6,
6	15896221	4	NUT, M6, Cl 10,
7	86628564	3	CLAMP, 1 1/4", Insul, 3/8" Bolt,
8	86586810	1	SUPPORT,
9	335021	1	CLAMP, {PP:80335021}
10	9837692	2	CLAMP, {PP:89837692}
11	NS	1	NOT SERVICED, Rivet
12	84320490	1	RELAY,
13	84000651	3	RELAY, , BSN C479
13	87340538	3	RELAY, , ASN D480
14	439588	4	SUPPORT,
15	100012	3	NUT, M4, Cl 8,
16	322358	3	WASHER, SPRING, Belleville, M8, 4MM
17	44334	3	SCREW, Cross Pan Hd, M4 x 12,
18	84078783	1	FUSE, 80A
19	84320118	1	FUSE, 40A
20	84078784	2	FUSE HOLDER,
21	86511816	4	SCREW, Cross Pan Hd, M3 x 16,
22	86509827	4	WASHER, LOCK, M3,
23	86508812	4	NUT, M3, Cl 8,

06.223(01) ENGINE ELECTRICITY

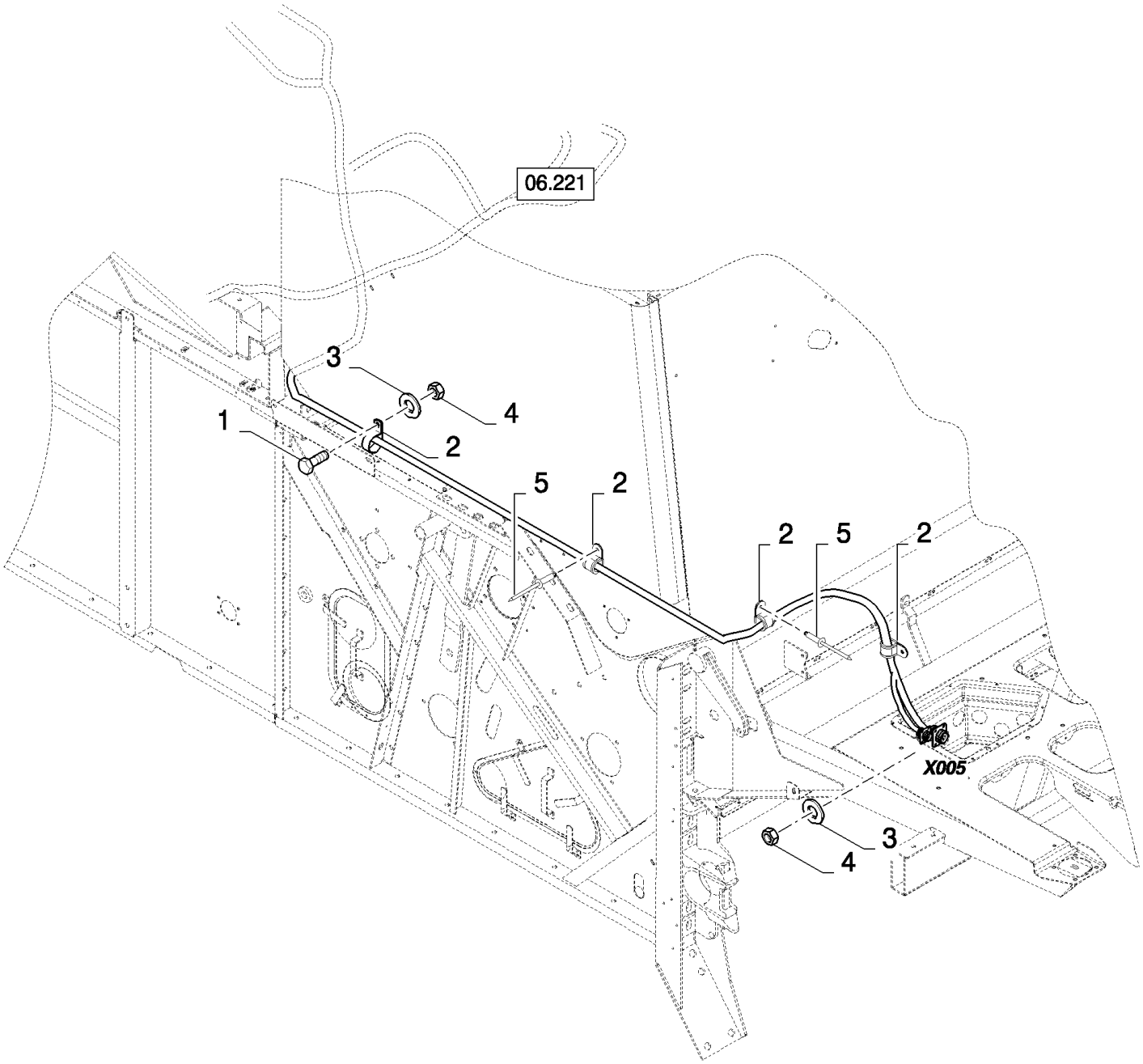

CS660 COMBINE BASE UNIT (1/03-) - Electrical System

06.223(01) ENGINE ELECTRICITY

ссылка	Номер детали	Кол-во	Описание
1	120100	1	BOLT, Hex, M6 x 20, 8.8,
2	86628564	7	CLAMP, 1 1/4", Insul, 3/8" Bolt,
3	322357	2	WASHER, SPRING, Belleville, M6,
4	15896221	2	NUT, M6, Cl 10,
5	NS	5	NOT SERVICED, Rivet

06.224(01) ENGINE ELECTRICITY

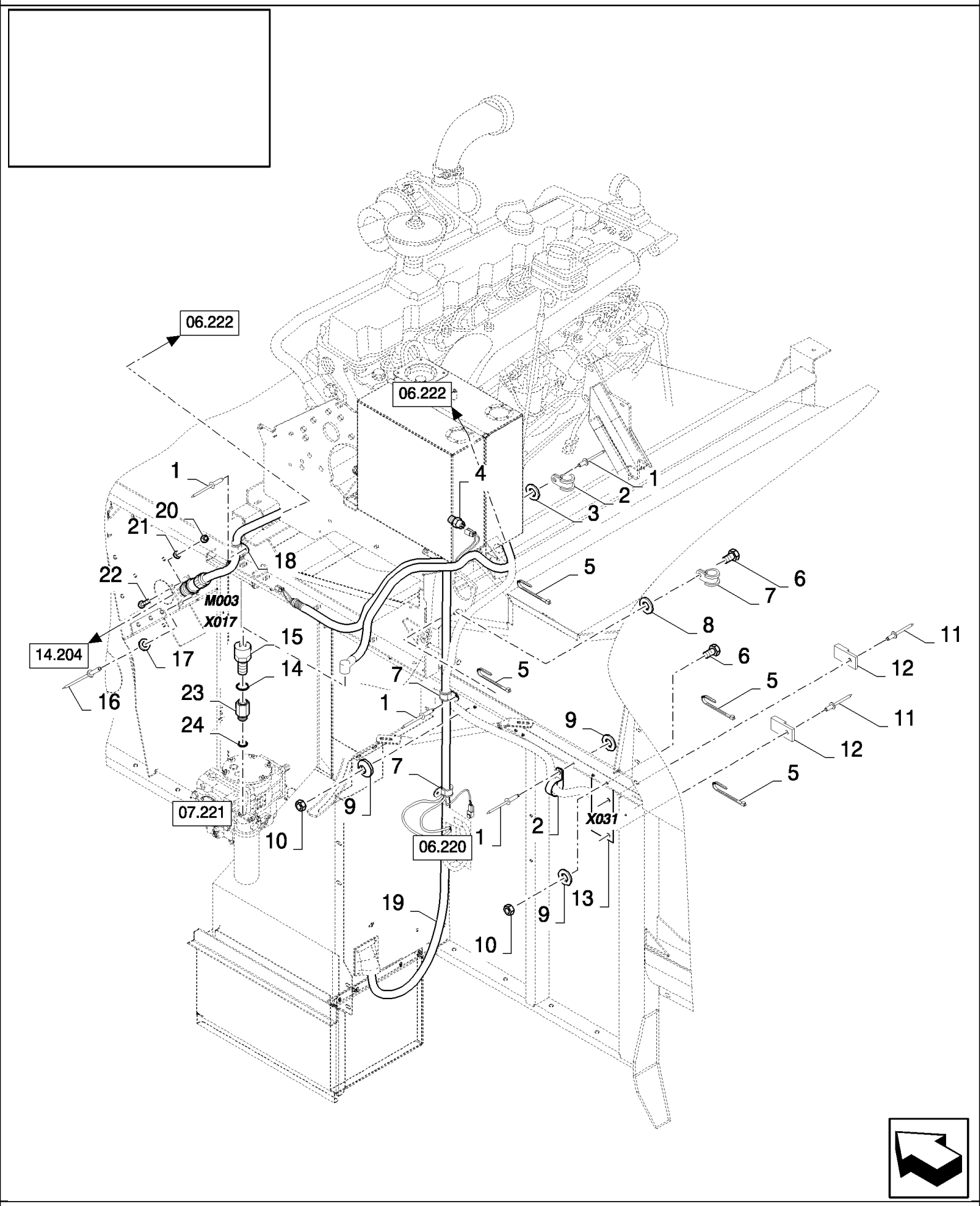

06.224(01) ENGINE ELECTRICITY

ссылка	Номер детали	Кол-во	Описание
1	NS	8	NOT SERVICED, Rivet
2	84818443	5	CLAMP,
3	322356	3	WASHER, LOCK, {PP:80322356} 5MM
4	84021678	1	SENDER UNIT,
5	89993154	5	CLAMP,
6	120100	3	BOLT, Hex, M6 x 20, 8.8,
7	86628564	4	CLAMP, 1 1/4", Insul, 3/8" Bolt,
8	9824259	1	WASHER, M6 x 12 x 1.6,
9	322357	5	WASHER, SPRING, Belleville, M6,
10	15896221	3	NUT, M6, Cl 10,
11	NS	2	NOT SERVICED, Rivet
12	84058832	2	CLIP,
13	84441311	1	PLATE,
14	220049	1	GASKET, {PP:80220049}
15	434529	1	SENDER UNIT, {PP:80434529}
16	NS	4	NOT SERVICED, Rivet
17	412548	4	WASHER, {PP:80412548} 3.2MM
18	84818442	2	CLAMP,
19	84437237	1	HARNESS, WIRE, , SEE FIGURE 06.519 01, BSN C375
19	84454005	1	HARNESS, WIRE, , SEE FIGURE 06.519 02, BSN F376419
19	84460721	1	HARNESS, WIRE, , SEE FIGURE 06.519 03, ASN D420
20	86508812	4	NUT, M3, Cl 8,
21	80062350	4	WASHER, 3MM
22	86511816	4	SCREW, Cross Pan Hd, M3 x 16,
23	9811374	1	CONNECTOR, HYD., (24)
24	9617873	1	O-RING, 6-1, 90 Duro, .468" ID x .078" Thk,

06.225(01) STANDARD LIGHTS, REAR

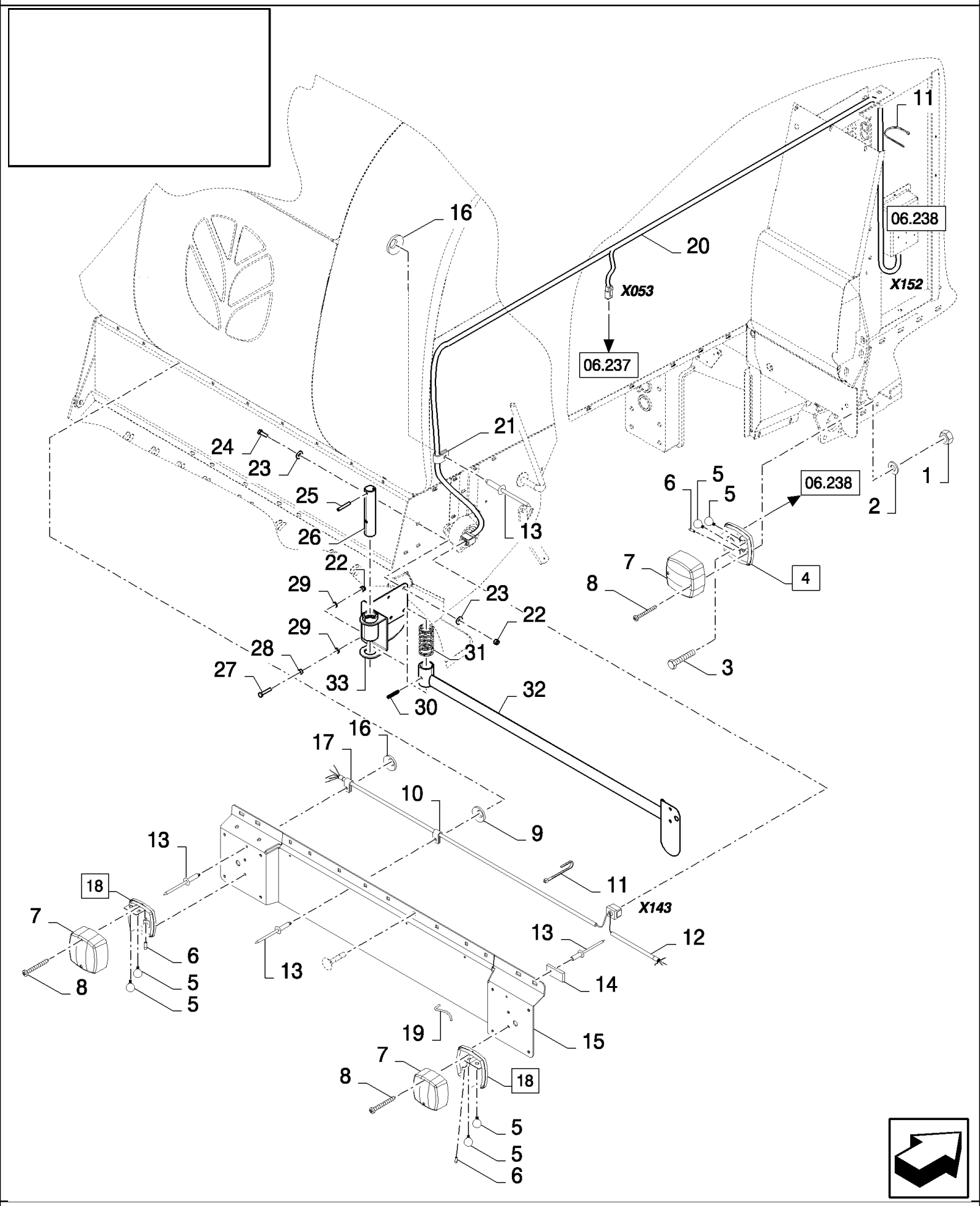

06.225(01) STANDARD LIGHTS, REAR

ссылка	Номер детали	Кол-во	Описание
1	412152	8	NUT, LOCK, M6 x 1, Cl 8.8,
2	86588450	8	WASHER, M6,
3	86511830	8	SCREW, Cross Pan Hd, M6 x 20,
4	84037090	2	LAMP, TAIL, (5 to 8)
5	398877	8	BULB, {PP:80398877}
6	418870	4	BULB, {PP:80418870}
7	NSS	AR	NOT SERVICED SEPARATELY,
8	NSS	AR	NOT SERVICED SEPARATELY,
9	322355	4	WASHER, SPRING, Belleville, M4,
10	332401	4	CLAMP, WIRE, {PP:80332401}
11	89993154	4	CLAMP,
12	84437273	1	HARNESS, WIRE, , SEE FIGURE 06.524, BSN C319
12	84447791	1	HARNESS, WIRE, , SEE FIGURE 06.559, ASN D320
13	NS	5	NOT SERVICED, Rivet
14	84807267	1	CONNECTOR, WIRE,
15	84447433	1	PLATE,
16	322356	2	WASHER, LOCK, {PP:80322356} 5MM
17	9507807	1	CLAMP, {PP:89507807}
18	84037093	2	LAMP, (5 to 8)
18	84037090	2	LAMP, TAIL, (5 to 8), FOR GERMANY AND HUNGARY ONLY
19	350674	12	CONNECTOR, WIRE, {PP:80350674}
20	84437263	1	HARNESS, WIRE, , SEE FIGURE 06.523
21	84818443	1	CLAMP,
22	84430190	8	NUT, M8, FOR CL560 ONLY
23	84430060	12	WASHER, 8MM, FOR CL560 ONLY
24	84430021	6	BEARING ASSY, M8x30, FOR CL560 ONLY
25	84430210	2	PIN, SPLIT (COTTER), , FOR CL560 ONLY
26	84430208	2	HINGE, , FOR CL560 ONLY
27	84430159	2	SCREW, M8x40, FOR CL560 ONLY
28	84430099	2	NUT, M8, FOR CL560 ONLY
29	84430178	4	WASHER, 8MM, FOR CL560 ONLY
30	84430209	2	PIN, SPLIT (COTTER), , FOR CL560 ONLY
31	84430207	2	SPRING, , FOR CL560 ONLY
32	84430205	1	SUPPORT, LH, FOR CL560 ONLY
32	84430206	1	SUPPORT, RH, FOR CL560 ONLY
33	84430203	1	SUPPORT, LH, FOR CL560 ONLY
33	84430204	1	SUPPORT, RH, FOR CL560 ONLY

06.226(01) BATTERY

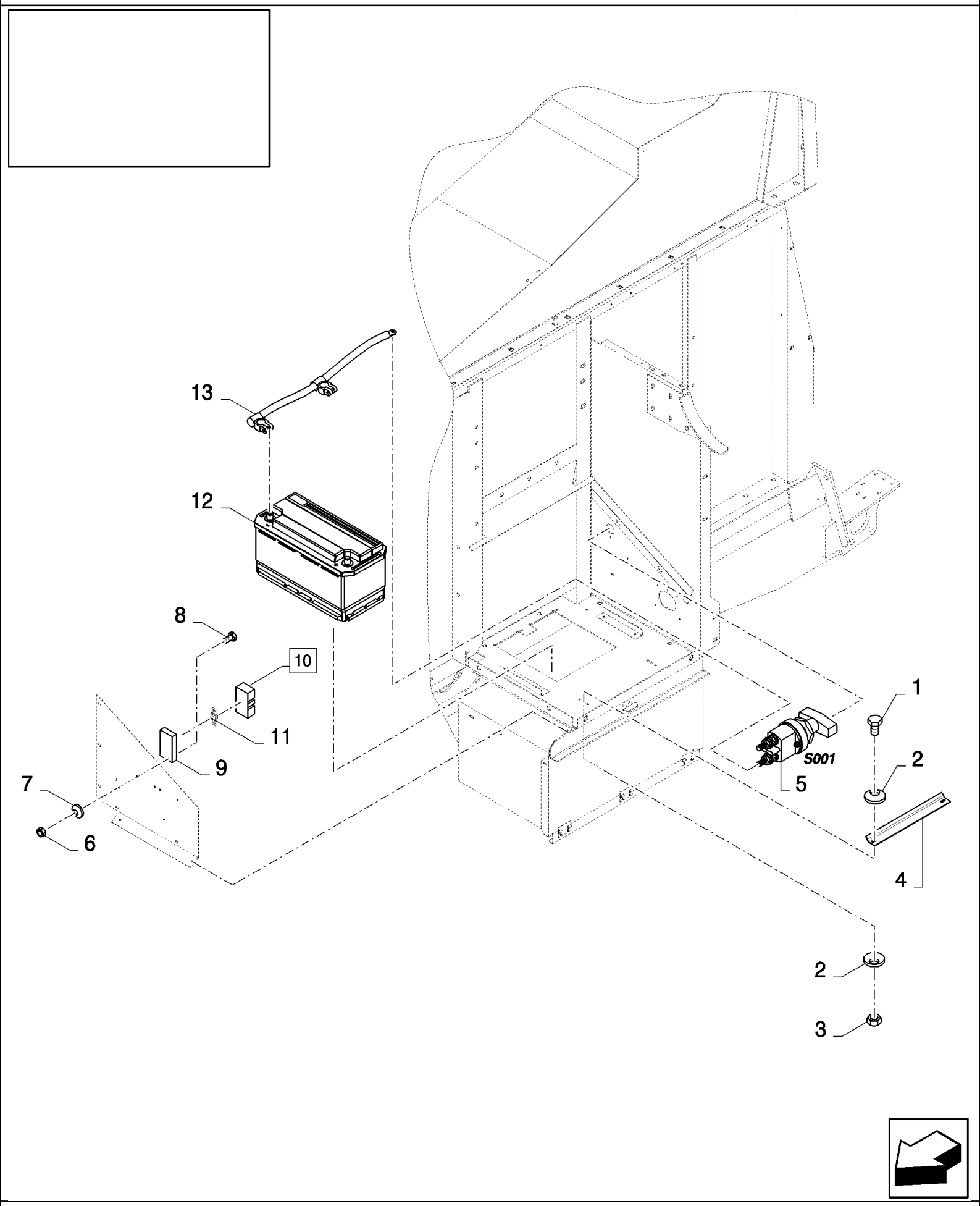

06.226(01) BATTERY

ссылка	Номер детали	Кол-во	Описание
1	86508568	2	BOLT, Hex, M6 x 16, 8.8,
2	322357	4	WASHER, SPRING, Belleville, M6,
3	15896221	2	NUT, M6, Cl 10,
4	84435776	1	PLATE, FIXING,
5	84998012	1	SWITCH, ASSY,
6	86508812	2	NUT, M3, Cl 8,
7	86509827	2	WASHER, LOCK, M3,
8	86511816	2	SCREW, Cross Pan Hd, M3 x 16,
9	NSS	1	NOT SERVICED SEPARATELY,
10	84078784	1	FUSE HOLDER, (9)
11	84078783	1	FUSE, 80A
12	NS	2	NOT SERVICED,
13	84400865	1	CABLE, BATTERY (NEG), , SEE FIGURE 06.504

06.227(01) ELECTRICS ON HITCH

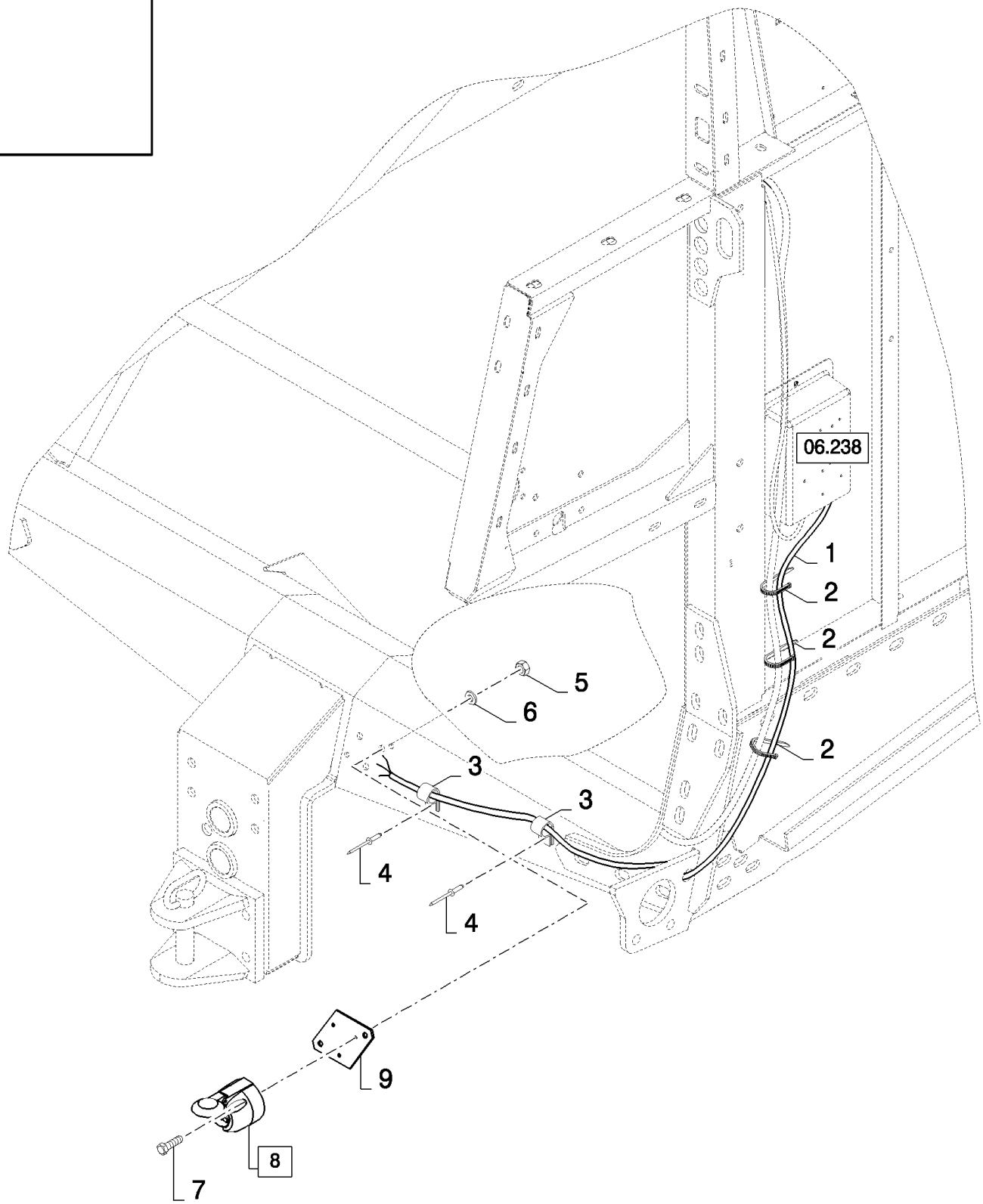

06.227(01) ELECTRICS ON HITCH

ссылка	Номер детали	Кол-во	Описание
1	84437294	1	HARNESS, WIRE, , SEE FIGURE 06.525
2	89993154	5	CLAMP,
3	9503929	2	CLAMP, {PP:89503929}
4	NS	2	NOT SERVICED, RIVET
5	100012	3	NUT, M4, Cl 8,
6	322355	3	WASHER, SPRING, Belleville, M4,
7	86585707	3	SCREW, Cross Pan Hd, M4 x 35, M4x35
8	398224	1	SOCKET, POWER, {PP:80398224} (9)
9	NSS	1	NOT SERVICED SEPARATELY,

06.228(01) GRAINTANK, LEVEL INDICATOR

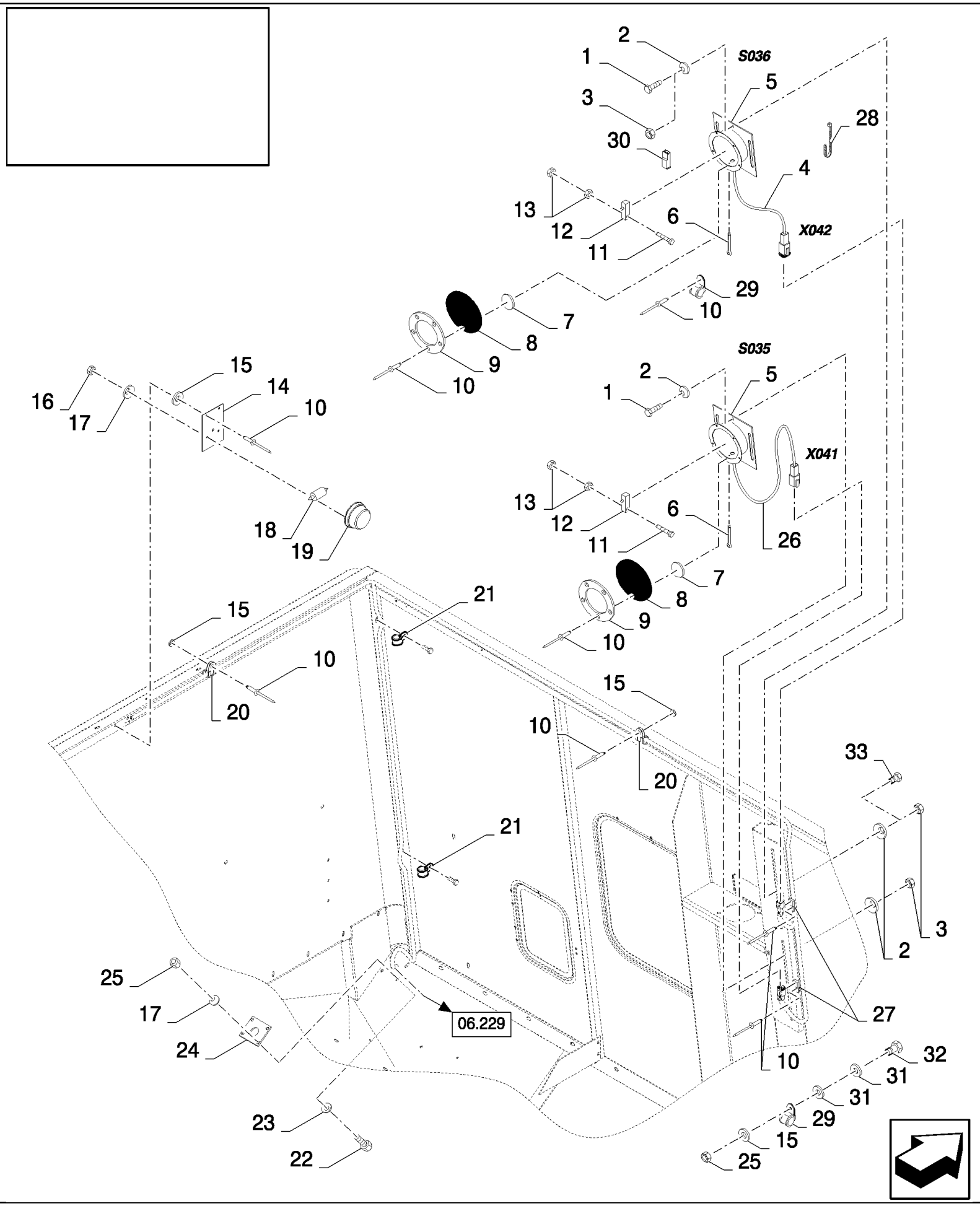

06.228(01) GRAINTANK, LEVEL INDICATOR

ссылка	Номер детали	Кол-во	Описание
1	120104	4	BOLT, Hex, M8 x 20, 8.8,
2	322358	8	WASHER, SPRING, Belleville, M8,
3	89706690	4	NUT, M8, Cl 8,
4	84441378	1	HARNESS, WIRE, , SEE FIGURE 06.541, BSN C363
4	84449919	1	HARNESS, WIRE, , SEE FIGURE 06.571, ASN D364
5	450336	2	CASE, {PP:80450336}
6	9512667	2	PIN, SPLIT (COTTER), {PP:89512667} M2 x 20,
7	250244	2	WASHER, {PP:80250244}
8	435233	2	CANVAS, {PP:80435233}
9	457556	2	RING, {PP:80457556}
10	NS	22	NOT SERVICED, RIVET
11	301571	4	SCREW, {PP:80301571} M3x25
12	399159	2	SWITCH, {PP:80399159}
13	86508812	8	NUT, M3, Cl 8,
14	84032147	1	BRACKET,
15	322356	10	WASHER, LOCK, {PP:80322356} 5MM
16	86508813	2	NUT, M5, Cl 8,
17	322357	6	WASHER, SPRING, Belleville, M6,
18	470016	1	BULB, {PP:80470016}
19	336483	1	LAMP, {PP:80336483}
20	9503929	8	CLAMP, {PP:89503929}
20	84818442	8	CLAMP, , FOR CL560 ONLY
21	9706748	5	CLAMP, {PP:89706748} 5/8", Insul, 5/16" Bolt,
22	86508568	4	BOLT, Hex, M6 x 16, 8.8,
23	9824259	4	WASHER, M6 x 12 x 1.6,
24	9507860	2	PLATE, {PP:89507860}
25	15896221	4	NUT, M6, Cl 10,
26	84441356	1	HARNESS, WIRE, , SEE FIGURE 06.540
27	84058832	2	CLIP,
28	89993154	2	CLAMP, , FOR CS660 ONLY
29	9507809	1	CLAMP, {PP:89507809} , FOR CS660 ONLY, FOR CS640 ONLY
30	441159	2	CONNECTOR, WIRE, {PP:80441159}
31	140040	2	WASHER, M6 x 22 x 2, , FOR CS640 ONLY
32	120100	1	BOLT, Hex, M6 x 20, 8.8, , FOR CS640 ONLY
33	16043224	2	BOLT, Hex, M8 x 16, 8.8, Full Thd, , FOR CS640 ONLY

06.229(01) GRAINTANK ELECTRICITY

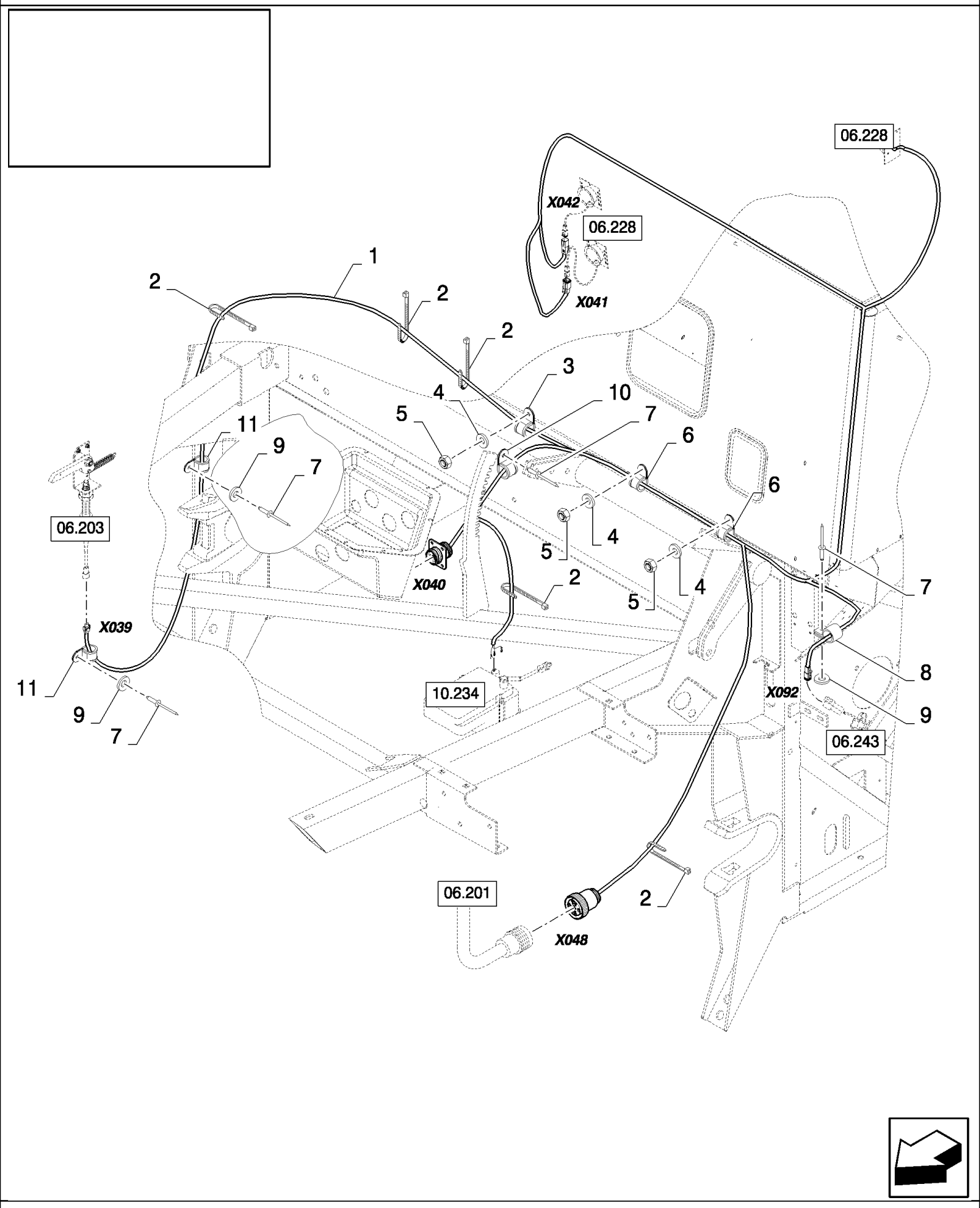

06.229(01) GRAINTANK ELECTRICITY

ссылка	Номер детали	Кол-во	Описание
1	84435326	1	HARNESS, WIRE, , FOR CS520, CS540 ONLY, SEE FIGURE 06.509, BSN C363
1	84449917	1	HARNESS, WIRE, , SEE FIGURE 06.570 01, FOR CS520, CS540 ONLY, BSN F364375
1	84454153	1	HARNESS, WIRE, , FOR CS520, CS540 ONLY, FOR CL560 ONLY, SEE FIGURE 06.570 02, ASN D376
1	84437082	1	HARNESS, WIRE, , SEE FIGURE 06.513, FOR CS640, CS660 ONLY, BSN C363
1	84449887	1	HARNESS, WIRE, , FOR CS640, CS660 ONLY, SEE FIGURE 06.569 01, BSN F364375
1	84454160	1	HARNESS, WIRE, , FOR CS640, CS660 ONLY, SEE FIGURE 06.569 02, ASN D376
2	89993154	8	CLAMP,
3	700514	1	CLAMP, {PP:80700514}
4	322357	3	WASHER, SPRING, Belleville, M6,
5	412152	3	NUT, LOCK, M6 x 1, Cl 8.8,
6	9706748	2	CLAMP, {PP:89706748} 5/8", Insul, 5/16" Bolt,
7	NS	9	NOT SERVICED, RIVET
8	9503929	3	CLAMP, {PP:89503929}
8	84818442	3	CLAMP, , FOR CL560 ONLY
9	322356	6	WASHER, LOCK, {PP:80322356} 5MM
10	9503931	3	CLAMP, {PP:89503931}
11	9503928	3	CLAMP, {PP:89503928}
11	84818441	3	CLAMP, , FOR CL560 ONLY

06.230(01) SPREADER HOOD, REMOTE CONTROL

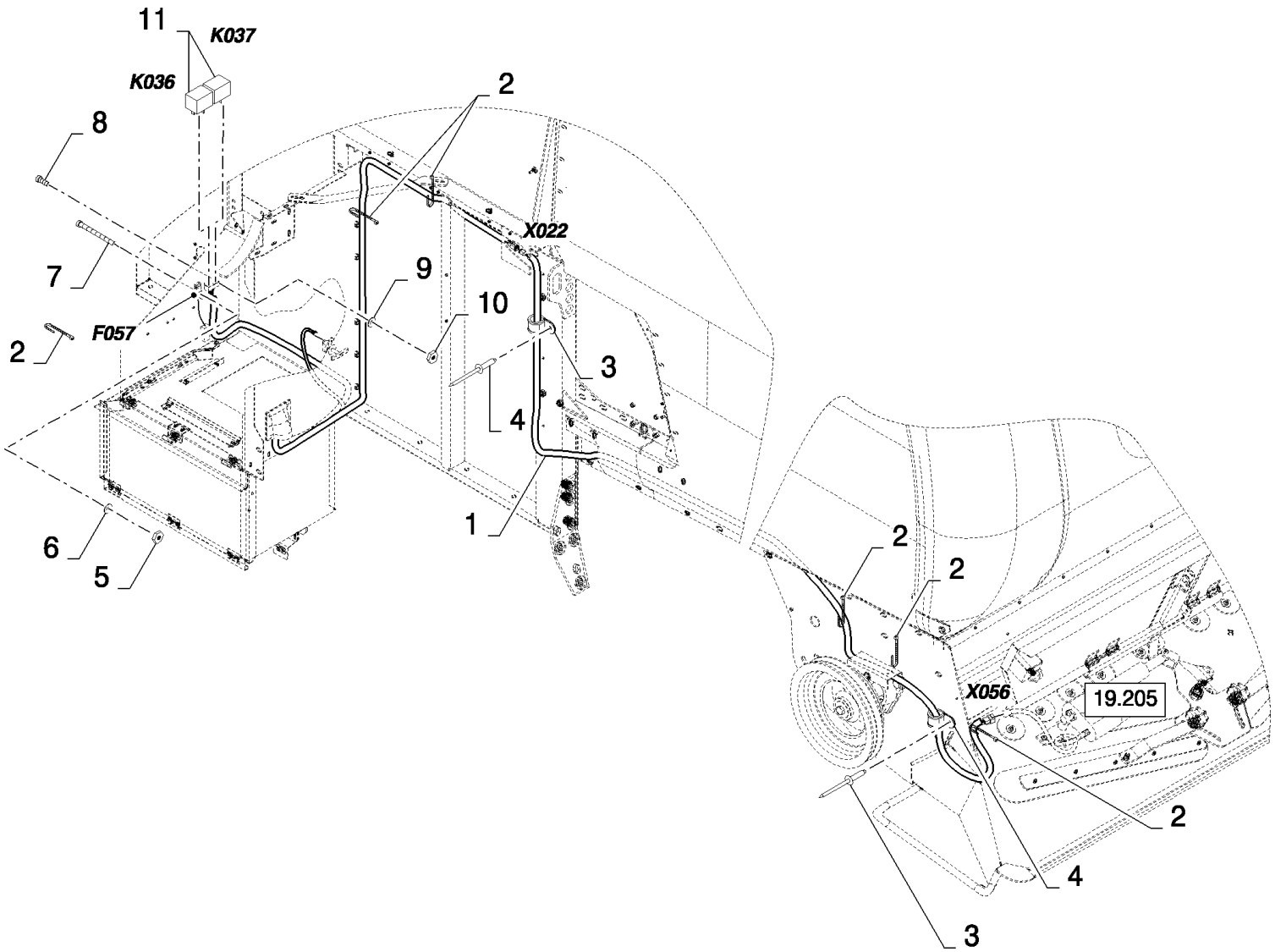

06.230(01) SPREADER HOOD, REMOTE CONTROL

ссылка	Номер детали	Кол-во	Описание
1	84441436	1	HARNESS, WIRE, , SEE FIGURE 06.544
2	89993154	14	CLAMP,
3	NS	6	NOT SERVICED, RIVET
4	84818442	6	CLAMP,
5	86508812	2	NUT, M3, Cl 8,
6	412548	2	WASHER, {PP:80412548} 3MM
7	86511816	2	SCREW, Cross Pan Hd, M3 x 16,
8	44334	2	SCREW, Cross Pan Hd, M4 x 12,
9	322355	2	WASHER, SPRING, Belleville, M4,
10	100012	2	NUT, M4, Cl 8,
11	84000651	2	RELAY,

06.231(01) VERTICAL KNIFE

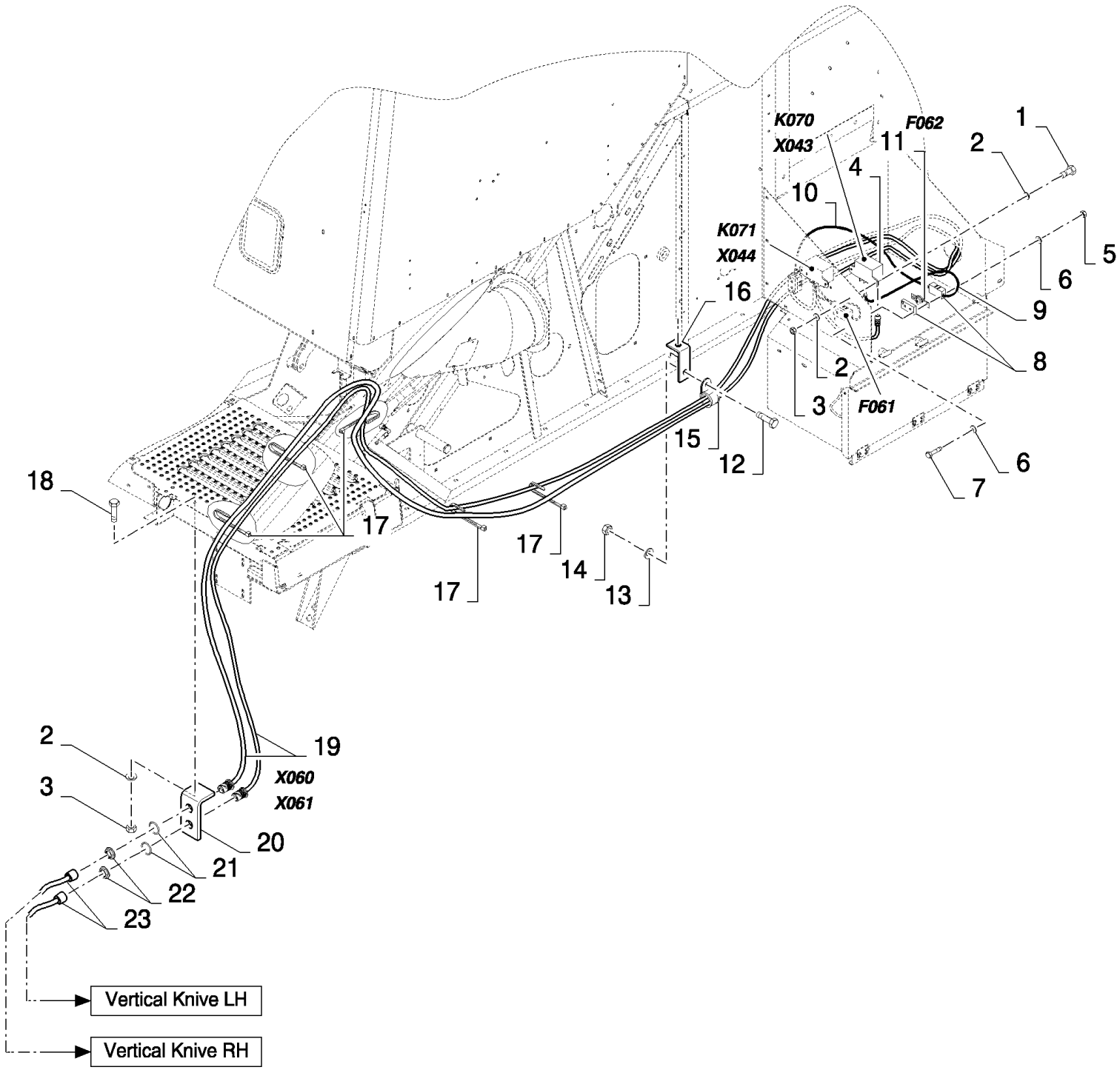

06.231(01) VERTICAL KNIFE

ссылка	Номер детали	Кол-во	Описание
1	86508568	4	BOLT, Hex, M6 x 16, 8.8,
2	322357	9	WASHER, SPRING, Belleville, M6,
3	15896221	5	NUT, M6, Cl 10,
4	86619908	2	RELAY,
5	86508812	4	NUT, M3, Cl 8,
6	86509827	8	WASHER, LOCK, M3,
7	86511816	4	SCREW, Cross Pan Hd, M3 x 16,
8	84078784	2	FUSE HOLDER,
9	84444505	2	HARNESS, WIRE, , SEE FIGURE 06.554
10	84444504	2	HARNESS, WIRE, , SEE FIGURE 06.553
11	84320118	2	FUSE, 40A
12	120104	1	BOLT, Hex, M8 x 20, 8.8,
13	322358	1	WASHER, SPRING, Belleville, M8,
14	89706690	1	NUT, M8, Cl 8,
15	9513271	1	CLAMP, {PP:89513271}
16	84446966	1	BRACKET,
17	89993154	8	CLAMP,
18	120100	1	BOLT, Hex, M6 x 20, 8.8,
19	84444502	2	HARNESS, WIRE, , SEE FIGURE 06.549/06.550
20	84444610	1	BRACKET,
21	NSS	2	NOT SERVICED SEPARATELY,
22	NSS	2	NOT SERVICED SEPARATELY,
23	84444503	2	HARNESS, WIRE, , SEE FIGURE 06.551/06.552

06.232(01) UPPER FRAME, ELECTRICITY

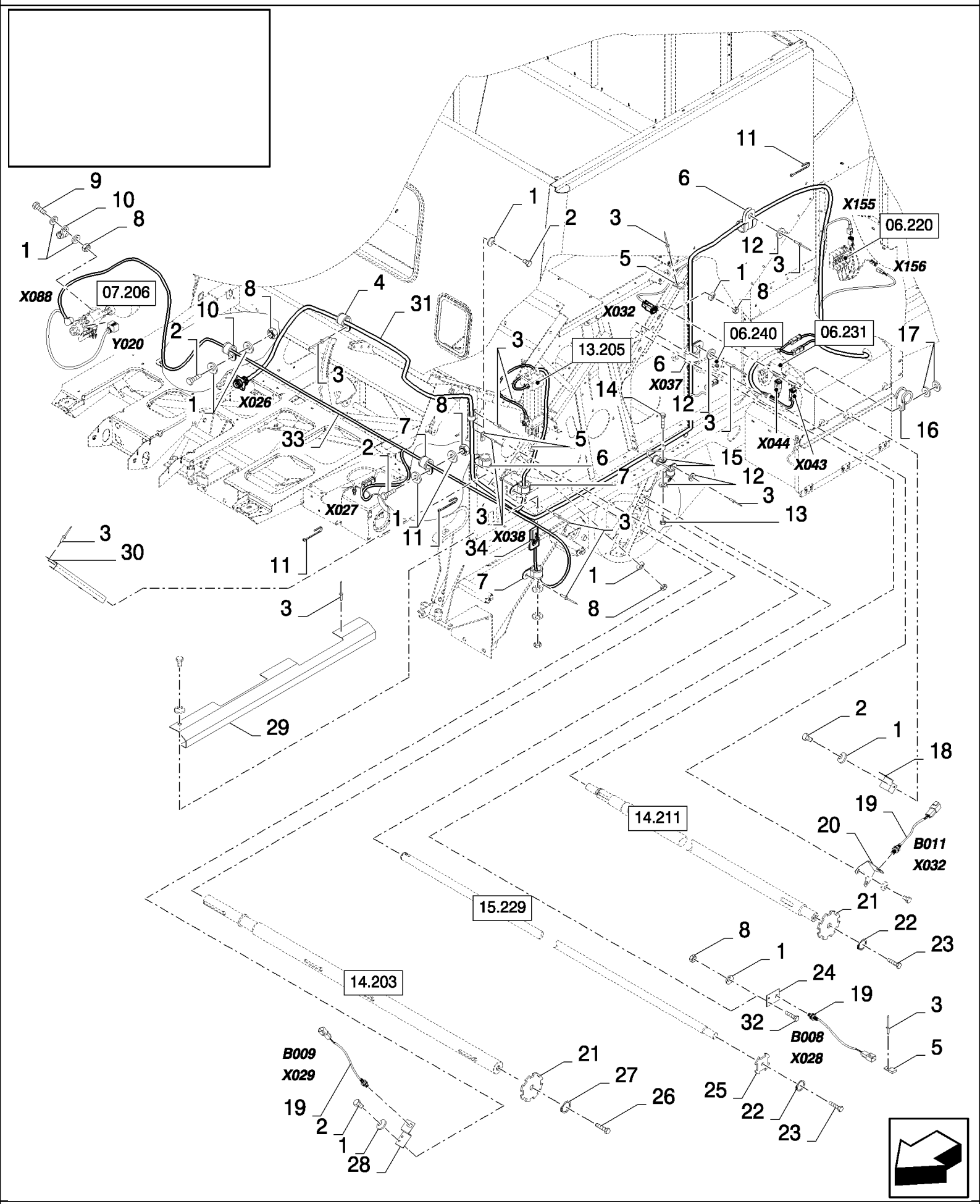

06.232(01) UPPER FRAME, ELECTRICITY

ссылка	Номер детали	Кол-во	Описание
1	322357	18	WASHER, SPRING, Belleville, M6,
2	86977786	8	BOLT, Hex, M6 x 25, 8.8,
3	NS	AR	NOT SERVICED, RIVET
4	84818445	4	CLAMP,
5	84058832	3	CLIP,
6	84818444	6	CLAMP,
7	84818443	5	CLAMP,
8	15896221	9	NUT, M6, Cl 10,
9	43118	1	BOLT, Hex, M6 x 40, 8.8,
10	84818442	2	CLAMP,
11	89993154	10	CLAMP,
12	322356	7	WASHER, LOCK, {PP:80322356} 5MM
13	86508813	1	NUT, M5, Cl 8,
14	120098	1	BOLT, Hex, M5 x 20, 8.8, Full Thd,
15	84818441	2	CLAMP,
16	86010402	1	CLAMP, 1/2", Insul, 3/8" Bolt,
17	140040	2	WASHER, M6 x 22 x 2,
18	84334562	1	BRACKET, , BSN C487
18	87341325	1	BRACKET, , ASN D488
19	84058861	3	SENSOR, , SEE FIGURE 06.701
20	84077974	1	SUPPORT,
21	84077929	2	DISC,
22	140045	2	WASHER, SPRING, Belleville, M10,
23	43138	2	BOLT, Hex, M10 x 20, 8.8, Full Thd,
24	84334070	1	BRACKET,
24	84077951	1	BRACKET, , FOR CL560 ONLY
25	84077888	1	DISC,
26	300388	1	BOLT, Hex, M12 x 25, 8.8,
27	140046	1	WASHER, SPRING, Belleville, M12,
28	84334036	1	BRACKET,
29	84434725	1	SHIELD,
30	84434780	1	SHIELD,
31	84435223	1	HARNESS, WIRE, , SEE FIGURE 06.508, BSN C363
31	84452019	1	HARNESS, WIRE, , SEE FIGURE 06.572 01, BSN F364375
31	84454028	1	HARNESS, WIRE, , SEE FIGURE 06.572 02, ASN D376
32	86508568	2	BOLT, Hex, M6 x 16, 8.8,
33	84452029	1	HARNESS, WIRE, , SEE FIGURE 06.573, ASN D364
34	84807267	1	CONNECTOR, WIRE,

06.233(01) PRINTED CIRCUIT

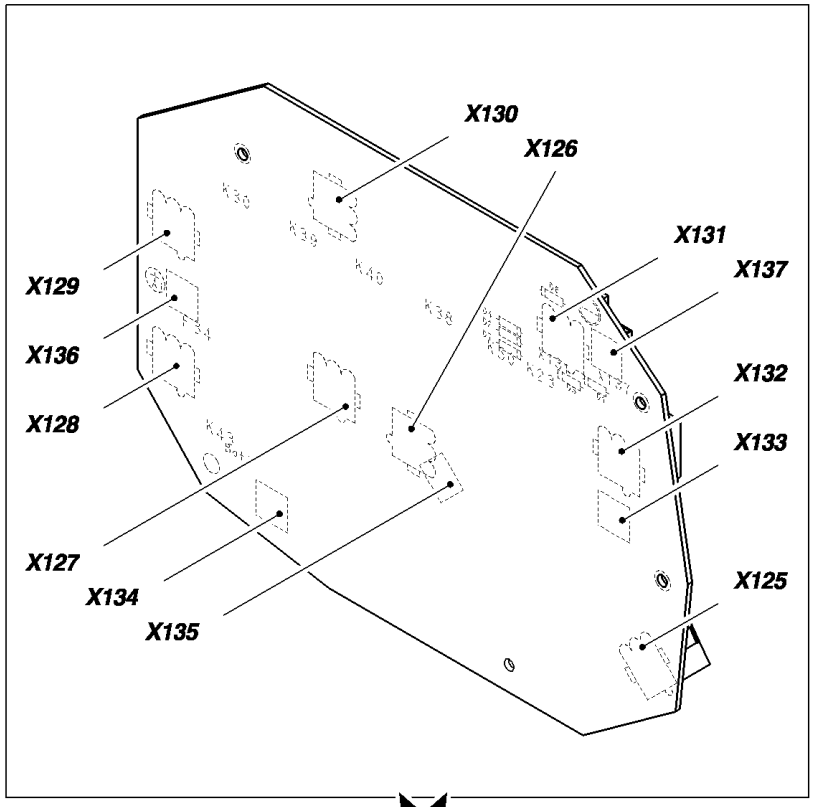

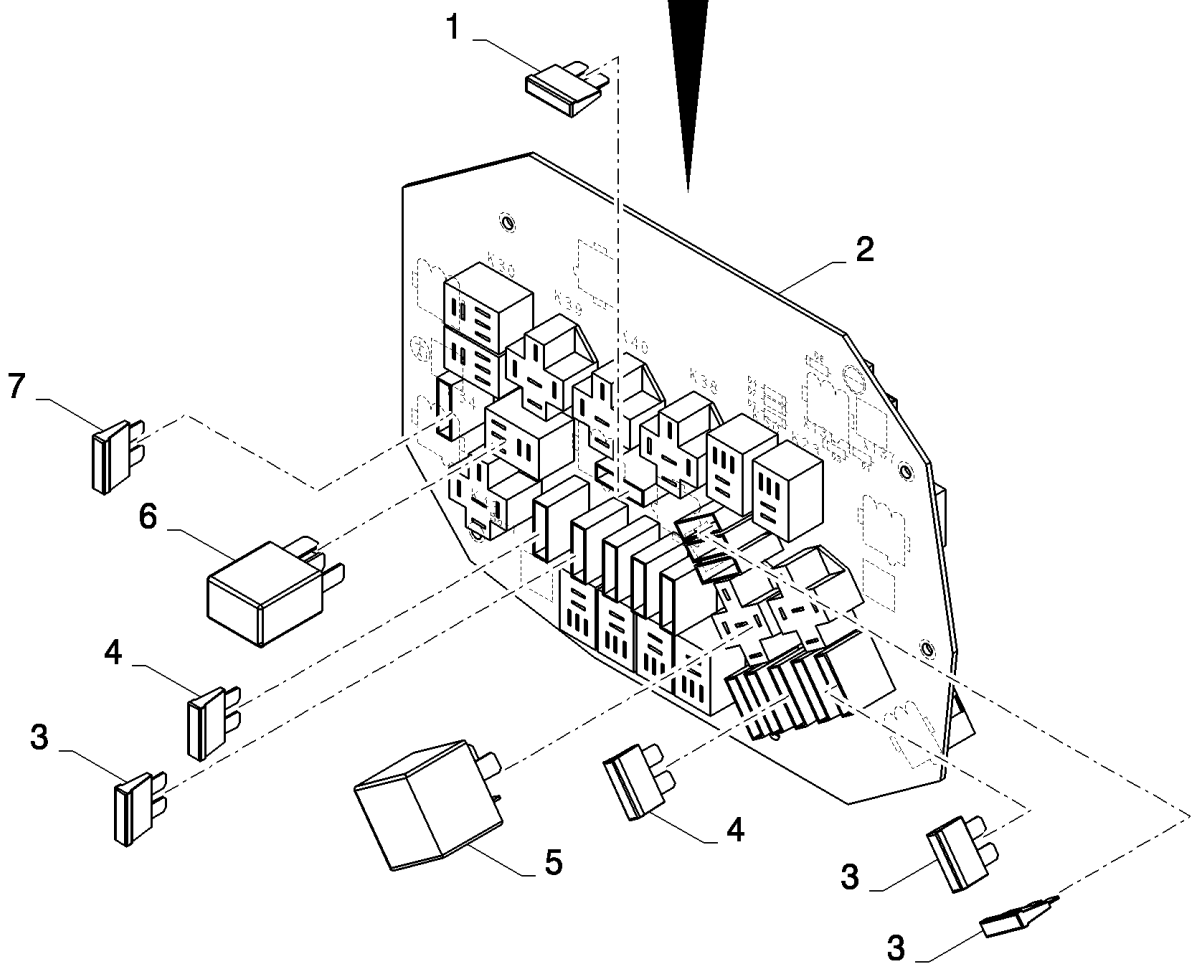

06.233(01) PRINTED CIRCUIT

ссылка	Номер детали	Кол-во	Описание
1	84032356	1	FUSE, 30A
2	84441163	1	BOARD, PRINTED CIRCUIT,
3	9504308	AR	FUSE, 15A
4	9811773	2	FUSE, {PP:89811773} 10A
5	84000651	6	RELAY, , BSN C479
5	86529089	6	RELAY, , ASN D480
6	86509590	AR	RELAY,
7	9504310	1	FUSE, 25A

06.234(01) CAB ROOF LIGHTS - WIRING

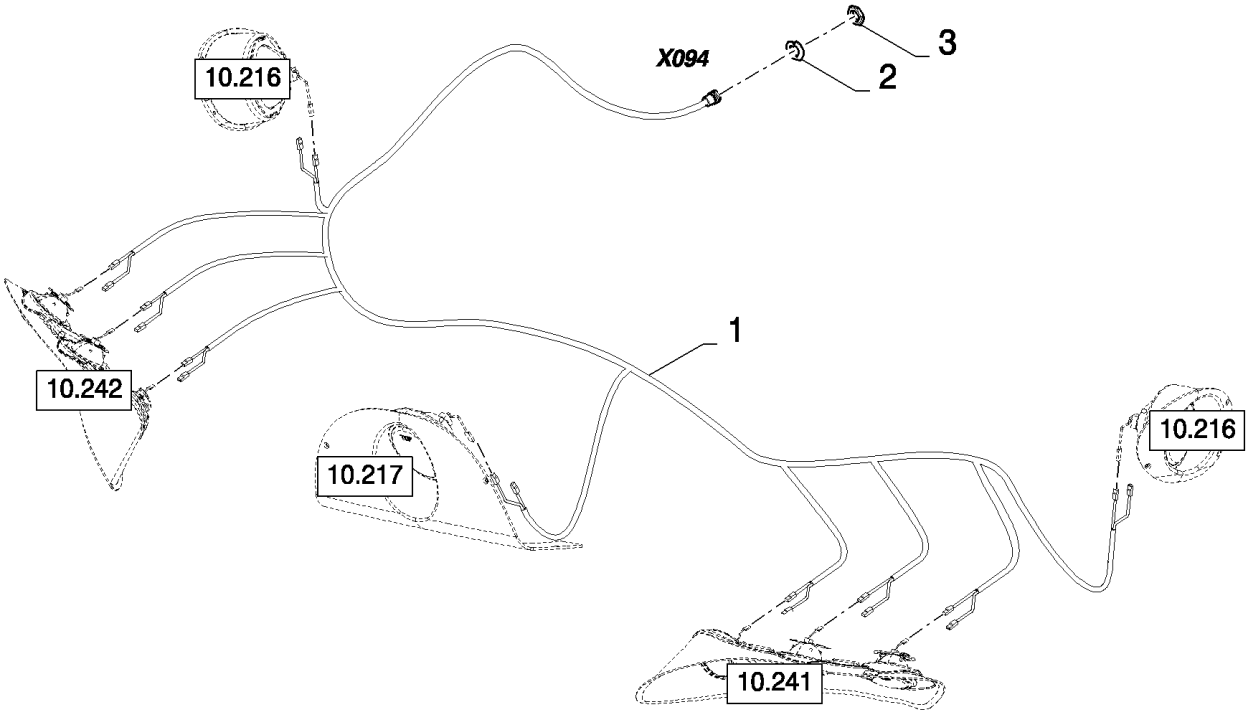

06.234(01) CAB ROOF LIGHTS - WIRING

ссылка	Номер детали	Кол-во	Описание
1	84437197	1	HARNESS, WIRE, , SEE FIGURE 06.518
2	84607513	1	WASHER, LOCK,
3	86619907	1	NUT,

06.235(01) FRONT LIGHTS - FOR AUSTRIA

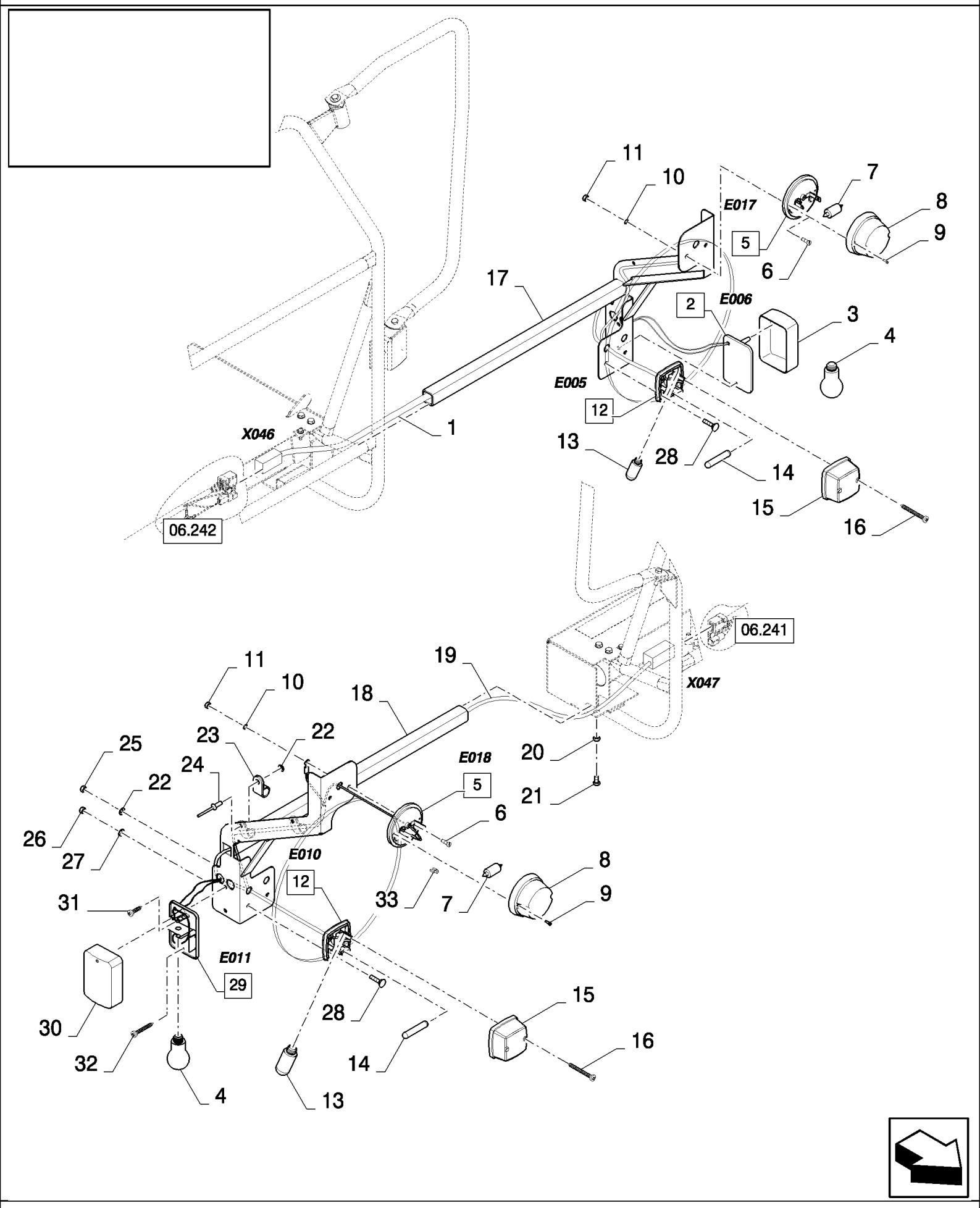

06.235(01) FRONT LIGHTS - FOR AUSTRIA

ссылка	Номер детали	Кол-во	Описание
1	84448033	1	HARNESS, WIRE, , SEE FIGURE 06.561
2	84011216	1	LAMP ASSY, SIDE, (3,4)
3	NS	1	NOT SERVICED,
4	418870	2	BULB, {PP:80418870} 12V 10W
5	336483	2	LAMP, {PP:80336483} (6 to 11)
6	NS	4	NOT SERVICED,
7	470016	2	BULB, {PP:80470016} 12V 10W
8	NS	2	NOT SERVICED,
9	NS	4	NOT SERVICED,
10	NS	4	NOT SERVICED,
11	NS	4	NOT SERVICED,
12	418871	2	LAMP, {PP:80418871} (13 to 16)
13	398877	2	BULB, {PP:80398877} 12V 10W
14	470017	2	BULB, {PP:80470017} 12V 5W
15	NS	4	NOT SERVICED,
16	NS	4	NOT SERVICED,
17	84448027	1	SUPPORT,
18	84448028	1	SUPPORT,
19	84448032	1	HARNESS, WIRE, , SEE FIGURE 06.560
20	89706690	2	NUT, M8, Cl 8,
21	16043224	2	BOLT, Hex, M8 x 16, 8.8, Full Thd,
22	322356	8	WASHER, LOCK, {PP:80322356} 5MM
23	84818441	4	CLAMP,
24	NS	4	NOT SERVICED, RIVET
25	86508813	4	NUT, M5, Cl 8,
26	100012	4	NUT, M4, Cl 8,
27	322355	4	WASHER, SPRING, Belleville, M4,
28	86511042	4	SCREW, Cross Pan Hd, M4 x 16,
29	84011215	1	LAMP ASSY, SIDE, (4,30)
30	NS	1	NOT SERVICED,
31	86585709	2	SCREW, Cross Pan Hd, M5 x 10, M5x20
32	120098	2	BOLT, Hex, M5 x 20, 8.8, Full Thd,
33	441159	8	CONNECTOR, WIRE, {PP:80441159}

06.236(01) ADDITIONAL LIGHTS FOR MAIZE HEADER

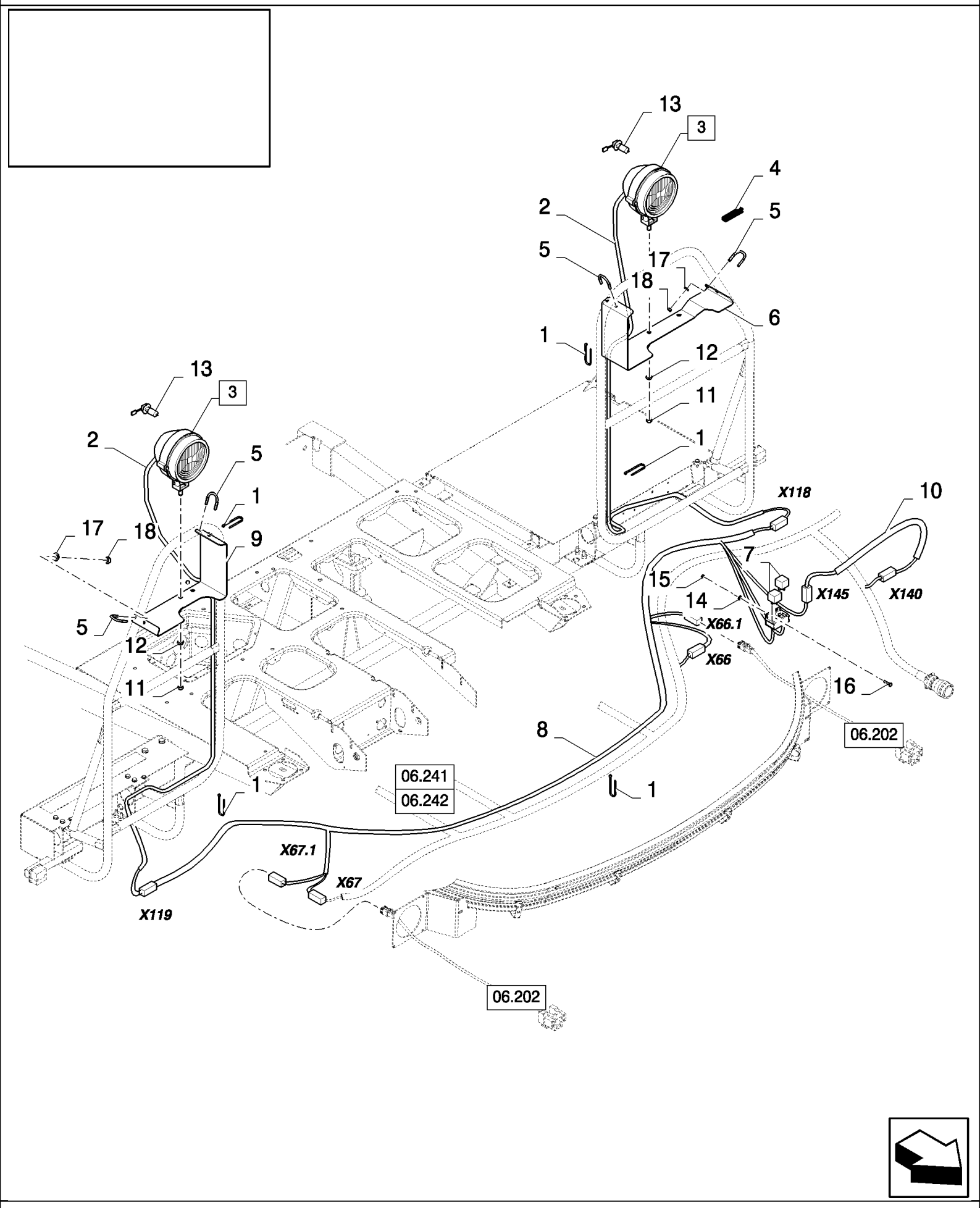

06.236(01) ADDITIONAL LIGHTS FOR MAIZE HEADER

ссылка	Номер детали	Кол-во	Описание
1	89993154	17	CLAMP,
2	84448631	2	HARNESS, WIRE, , SEE FIGURE 06.564/06.565
3	418863	2	LAMP, {PP:80418863} (11 to 13)
4	89850033	1	SEAL, L=0.07M
5	84448555	4	U-BOLT,
6	84448518	1	SUPPORT,
7	84000651	2	RELAY,
8	84448868	1	HARNESS, WIRE, , SEE FIGURE 06.567
9	84448530	1	SUPPORT,
10	84448908	1	HARNESS, WIRE, , SEE FIGURE 06.568
11	NS	2	NOT SERVICED,
12	NS	2	NOT SERVICED,
13	446592	2	BULB, {PP:80446592} 12V 60/55W Halogen
14	322356	2	WASHER, LOCK, {PP:80322356} 5MM
15	86508813	2	NUT, M5, Cl 8,
16	120098	2	BOLT, Hex, M5 x 20, 8.8, Full Thd,
17	322357	8	WASHER, SPRING, Belleville, M6,
18	15896221	8	NUT, M6, Cl 10,

06.237(01) STRAW WALKER DETECTOR

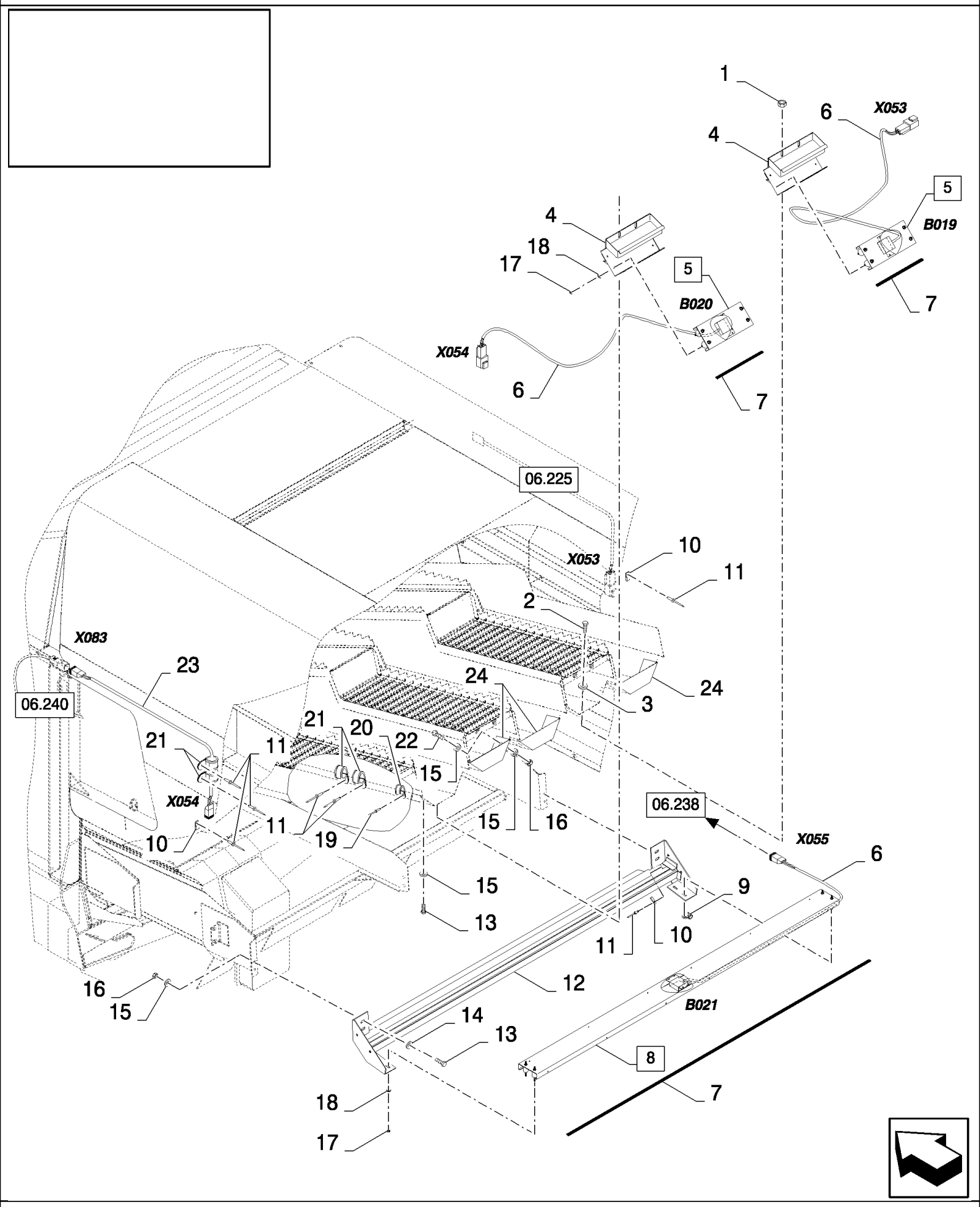

06.237(01) STRAW WALKER DETECTOR

ссылка	Номер детали	Кол-во	Описание
1	100012	6	NUT, M4, Cl 8,
2	86511042	6	SCREW, Cross Pan Hd, M4 x 16,
3	322355	6	WASHER, SPRING, Belleville, M4,
4	84017737	2	BOX,
5	86579531	2	DETECTOR, (6)
6	84000257	3	SENSOR, , SEE FIGURE 06.701
7	80401278	AR	SEAL, L=2.362M, FOR CS520, CS540 ONLY, FOR CL560 ONLY
7	80401278	AR	SEAL, L=2.622M, FOR CS640, CS660 ONLY
8	86579535	1	DETECTOR, (6), FOR CS520, CS540 ONLY, FOR CL560 ONLY
8	86579534	1	DETECTOR, (6), FOR CS640, CS660 ONLY
9	272535	1	CLAMP, {PP:80272535} 1/8", Insul, 1/4" Bolt,
10	84058832	3	CLIP,
11	NS	11	NOT SERVICED, RIVET
12	84454860	1	SUPPORT, , FOR CS520, CS540 ONLY, FOR CL560 ONLY
12	84454862	1	SUPPORT, , FOR CS640, CS660 ONLY
13	120104	8	BOLT, Hex, M8 x 20, 8.8,
14	378243	4	WASHER, M8,
15	322358	AR	WASHER, SPRING, Belleville, M8,
16	89706690	AR	NUT, M8, Cl 8,
17	15896221	12	NUT, M6, Cl 10,
18	322357	12	WASHER, SPRING, Belleville, M6,
19	NS	2	NOT SERVICED, RIVET
20	9503929	2	CLAMP, {PP:89503929} , BSN C363
20	84818442	2	CLAMP, , ASN D364
21	9706748	8	CLAMP, {PP:89706748} 5/8", Insul, 5/16" Bolt,
22	16043224	AR	BOLT, Hex, M8 x 16, 8.8, Full Thd,
23	84437262	1	HARNESS, WIRE, , SEE FIGURE 06.522
24	84042926	3	PLATE, COVER, , FOR CS520, CS540 ONLY, FOR CL560 ONLY
24	84042926	4	PLATE, COVER, , FOR CS640, CS660 ONLY

06.238(01) STRAW WALKER FRAME, ELECTRICAL COMPONENTS

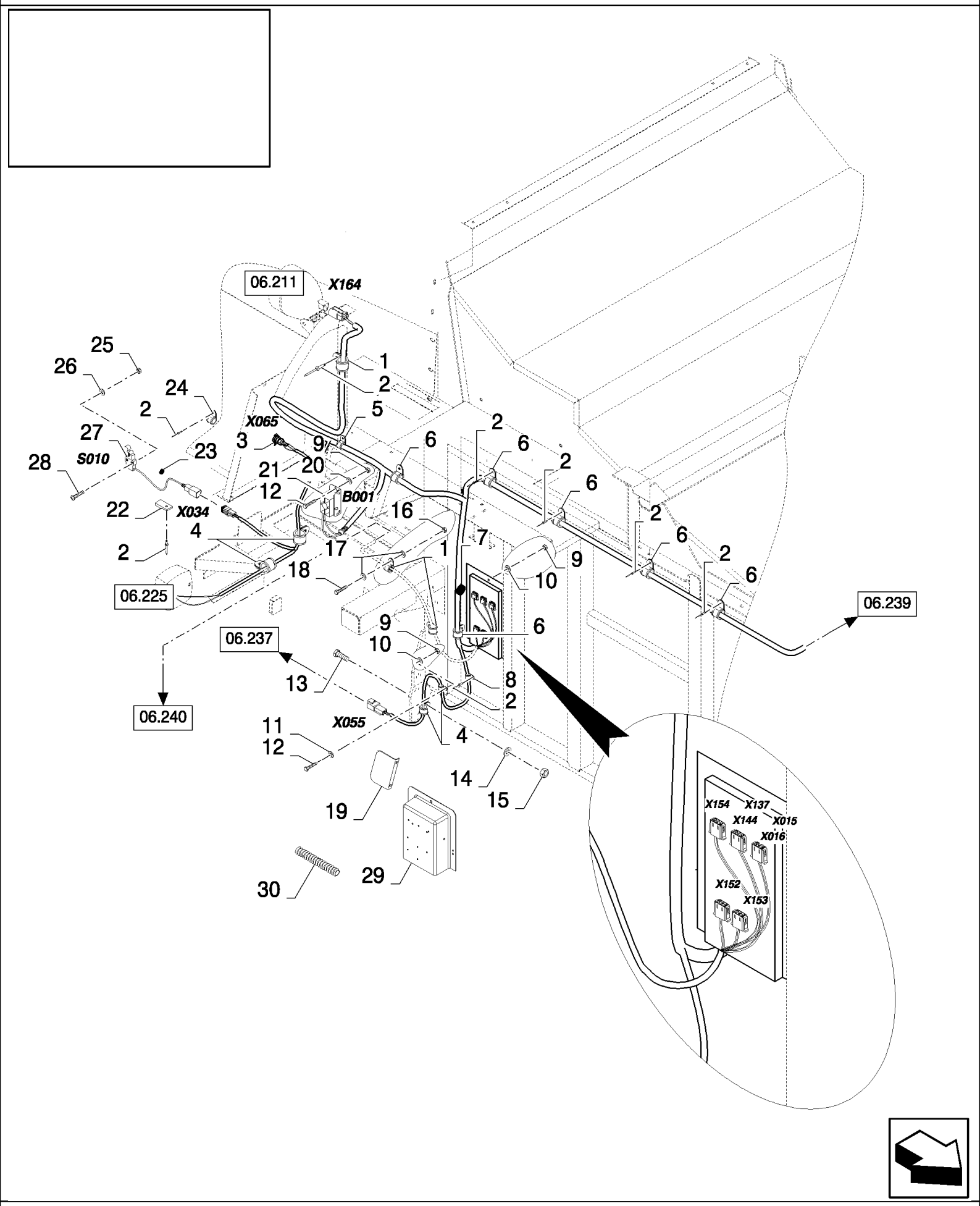

06.238(01) STRAW WALKER FRAME, ELECTRICAL COMPONENTS

ссылка	Номер детали	Кол-во	Описание
1	84818443	11	CLAMP,
2	NS	AR	NOT SERVICED, RIVET
3	374418	1	SOCKET, POWER, {PP:80374418} , ASN D364
4	9837692	8	CLAMP, {PP:89837692}
5	84818442	2	CLAMP,
6	84818445	7	CLAMP,
7	355596	1	GROMMET, {PP:80355596}
8	84818441	2	CLAMP,
9	15896221	7	NUT, M6, Cl 10,
10	412649	5	WASHER, SPRING, Belleville, M6,
11	86588450	2	WASHER, M6,
12	120100	4	BOLT, Hex, M6 x 20, 8.8,
13	16043224	2	BOLT, Hex, M8 x 16, 8.8, Full Thd,
14	322358	2	WASHER, SPRING, Belleville, M8,
15	89706690	2	NUT, M8, Cl 8,
16	86508813	1	NUT, M5, Cl 8,
17	322356	2	WASHER, LOCK, {PP:80322356} 5MM
18	120098	1	BOLT, Hex, M5 x 20, 8.8, Full Thd,
19	84443836	1	BRACKET, , ASN D364
20	322357	2	WASHER, SPRING, Belleville, M6, , ASN D364
21	84441511	1	BUZZER, , BSN C363
21	87010223	1	BUZZER, , ASN D364
22	84058832	1	CLIP, , ASN D364
23	89514935	1	SHOCK ABSORBER, , ASN D364
24	9507808	1	CLAMP, {PP:89507808} , ASN D364
25	86511824	2	SCREW, Cross Pan Hd, M4 x 20, , ASN D364
26	322355	2	WASHER, SPRING, Belleville, M4, , ASN D364
27	84807307	1	SWITCH, REAR LADDER, SEE FIGURE 06.701, ASN D364
28	100012	2	NUT, M4, Cl 8, , ASN D364
29	84320490	1	RELAY,
30	84818984	1	PROTECTOR, L=0.21M

06.239(01) STRAW WALKER FRAME, ELECTRICAL COMPONENTS

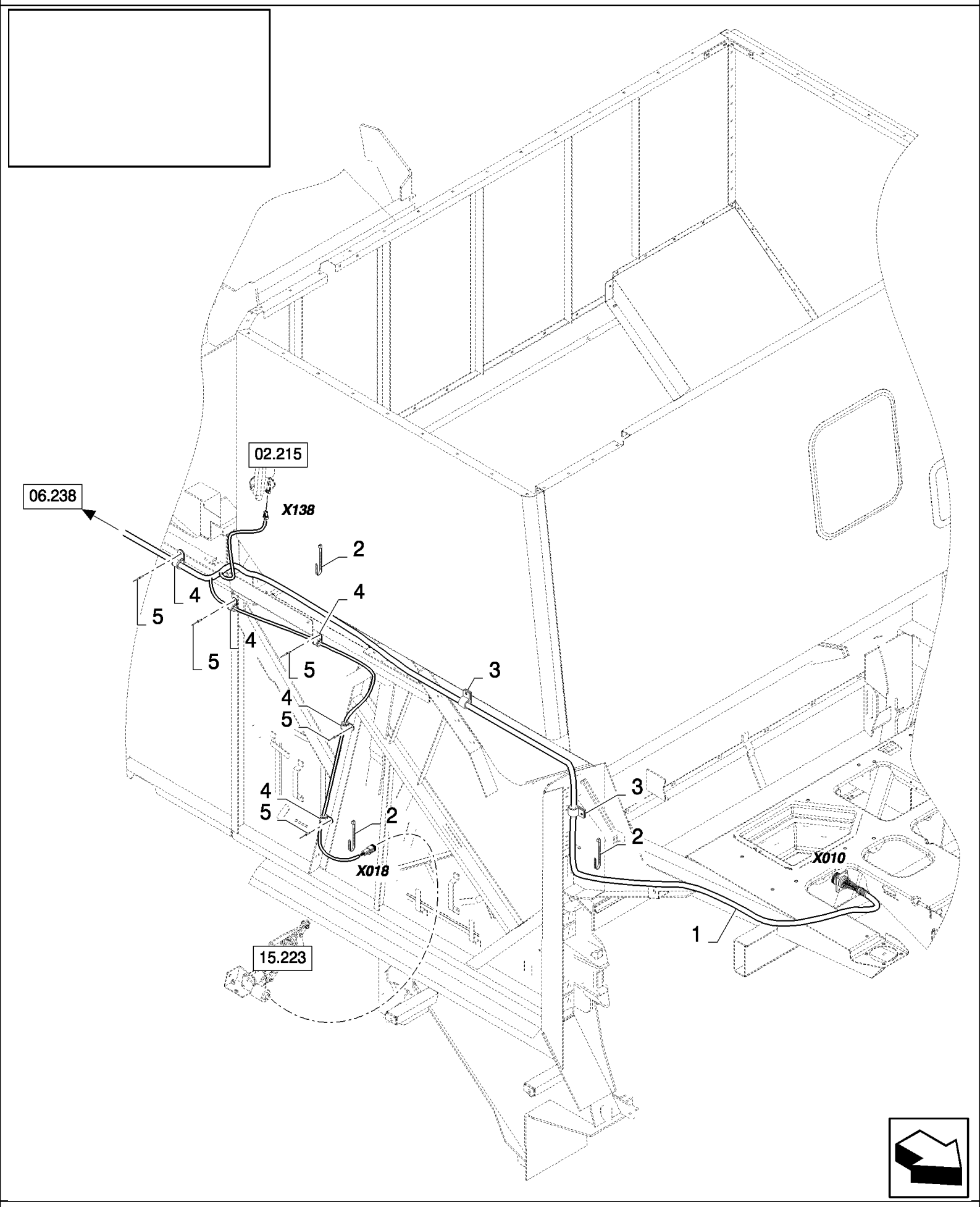

06.239(01) STRAW WALKER FRAME, ELECTRICAL COMPONENTS

ссылка	Номер детали	Кол-во	Описание
1	84435362	1	HARNESS, WIRE, , FOR CS520, CS540 ONLY, SEE FIGURE 06.510, BSN C363
1	84452211	1	HARNESS, WIRE, , SEE FIGURE 06.575 01, FOR CS520, CS540 ONLY, BSN F364409
1	84457730	1	HARNESS, WIRE, , FOR CS520, CS540 ONLY, FOR CL560 ONLY, SEE FIGURE 06.575 02, ASN D410
1	84437086	1	HARNESS, WIRE, , SEE FIGURE 06.514, FOR CS640, CS660 ONLY, BSN C363
1	84452210	1	HARNESS, WIRE, , FOR CS640, CS660 ONLY, SEE FIGURE 06.574 01, BSN F364409
1	84457661	1	HARNESS, WIRE, , FOR CS640, CS660 ONLY, SEE FIGURE 06.574 02, ASN D410
2	89993154	5	CLAMP,
3	9827902	4	CLAMP, {PP:89827902} 1", Insul, 3/8" Bolt,
4	84818442	5	CLAMP,
5	NS	6	NOT SERVICED, RIVET
6	84818445	1	CLAMP,

06.240(01) STRAW WALKER FRAME, ELECTRICAL COMPONENTS

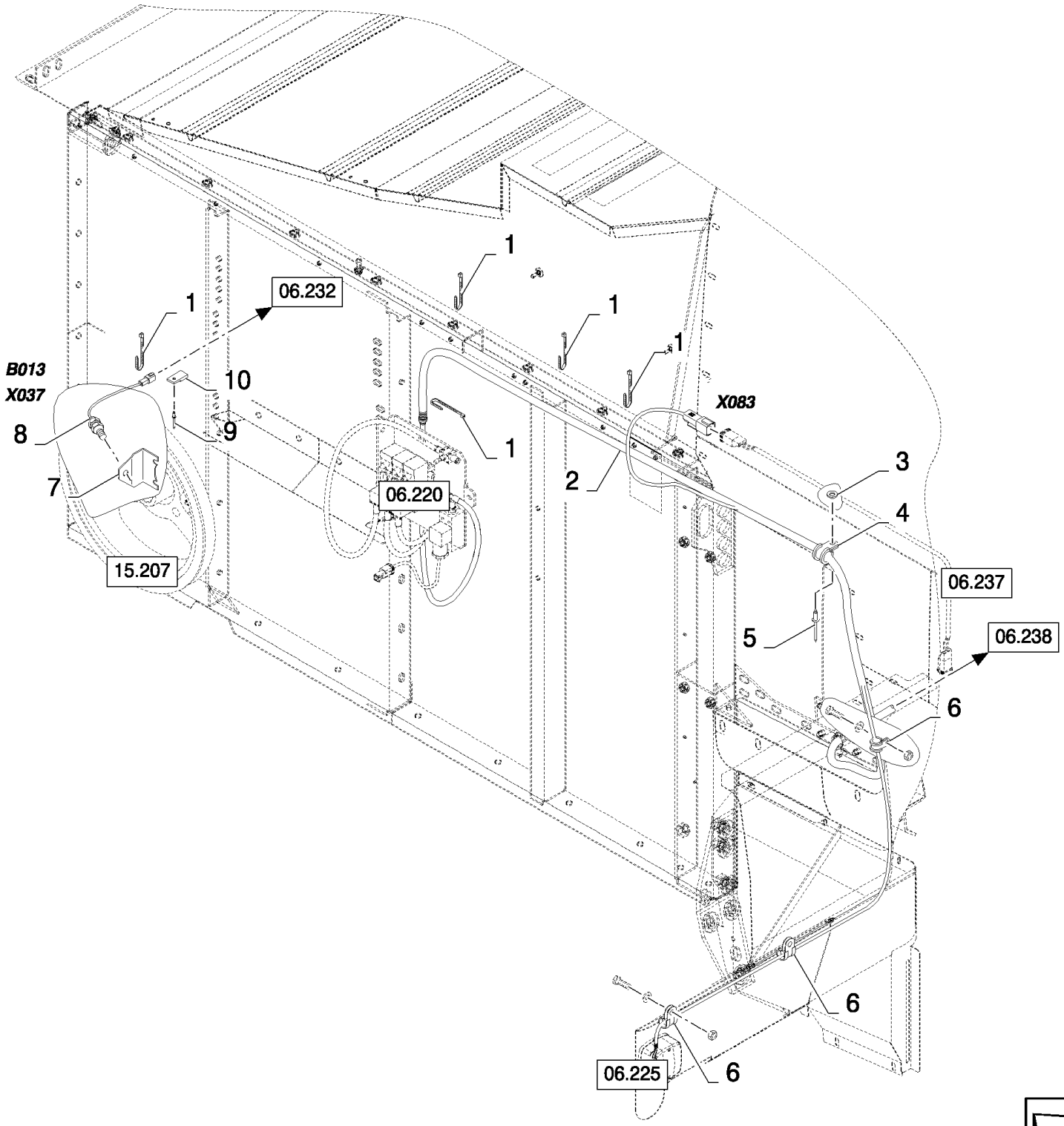

06.240(01) STRAW WALKER FRAME, ELECTRICAL COMPONENTS

ссылка	Номер детали	Кол-во	Описание
1	89993154	5	CLAMP,
2	84437252	1	HARNESS, WIRE, , FOR CS520, CS540 ONLY, SEE FIGURE 06.520 01, BSN C375
2	84454036	1	HARNESS, WIRE, , FOR CS520, CS540 ONLY, FOR CL560 ONLY, SEE FIGURE 06.520 02, ASN D376
2	84437261	1	HARNESS, WIRE, , FOR CS640, CS660 ONLY, SEE FIGURE 06.521 01, BSN C375
2	84454043	1	HARNESS, WIRE, , SEE FIGURE 06.521 02, FOR CS640, CS660 ONLY, ASN D376
3	322356	2	WASHER, LOCK, {PP:80322356} 5MM
4	84818443	2	CLAMP,
5	NS	2	NOT SERVICED, RIVET
6	9837692	6	CLAMP, {PP:89837692}
7	84334107	1	BRACKET,
8	84058861	1	SENSOR, , SEE FIGURE 06.701
9	NS	1	NOT SERVICED, RIVET
10	84058832	1	CLIP,

06.241(01) WIRING HARNESS

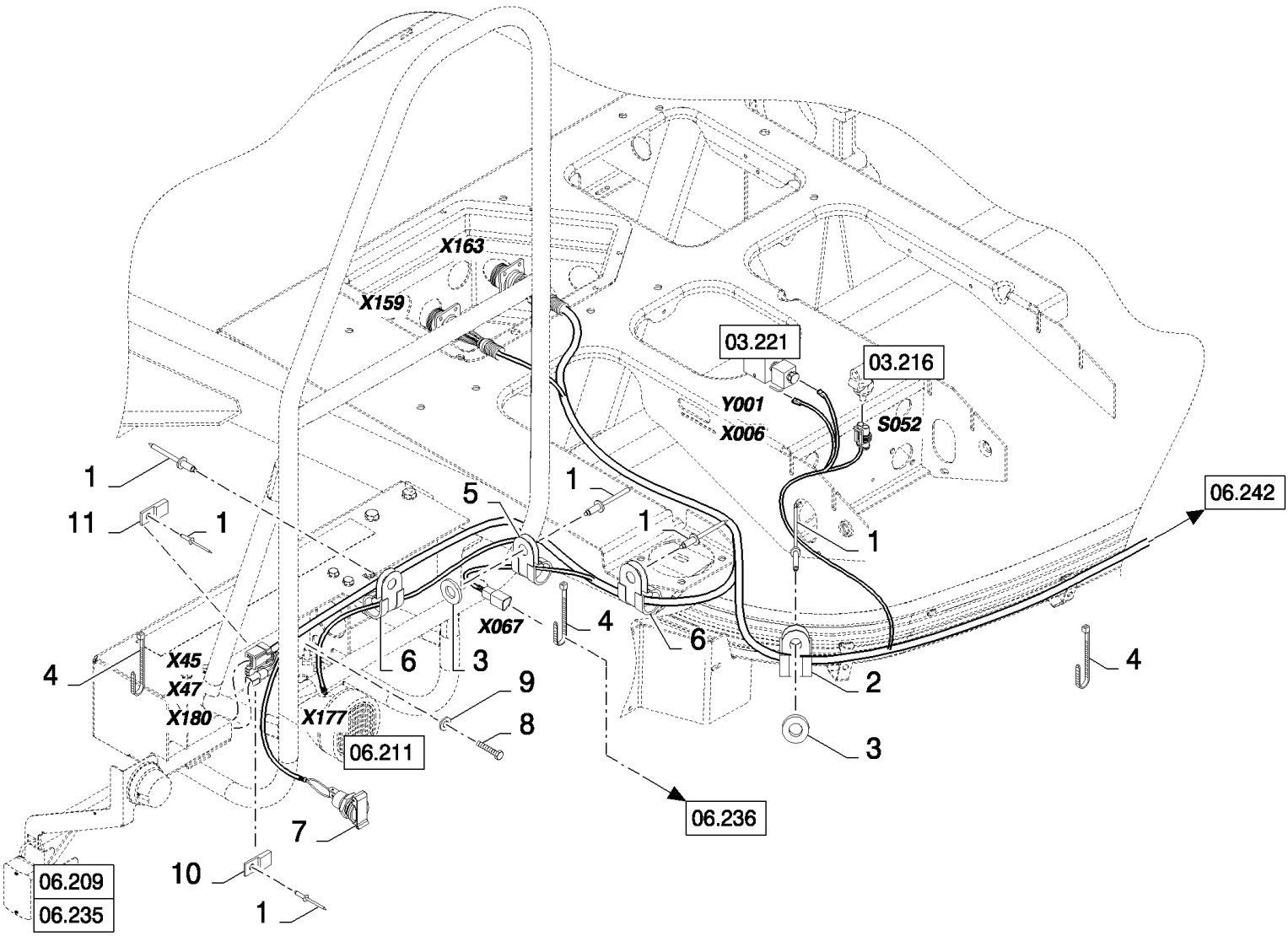

06.241(01) WIRING HARNESS

ссылка	Номер детали	Кол-во	Описание
1	NS	AR	NOT SERVICED, RIVET
2	86628564	1	CLAMP, 1 1/4", Insul, 3/8" Bolt,
3	322356	2	WASHER, LOCK, {PP:80322356} 5MM
4	89993154	8	CLAMP,
5	9503931	1	CLAMP, {PP:89503931} , BSN C363
5	84818444	1	CLAMP, , ASN D364
6	9503930	4	CLAMP, {PP:89503930} , BSN C363
6	84818443	4	CLAMP, , ASN D364
7	374418	1	SOCKET, POWER, {PP:80374418}
8	120100	1	BOLT, Hex, M6 x 20, 8.8,
9	322357	1	WASHER, SPRING, Belleville, M6,
10	84058832	1	CLIP,
11	84807267	1	CONNECTOR, WIRE,

06.242(01) WIRING HARNESS

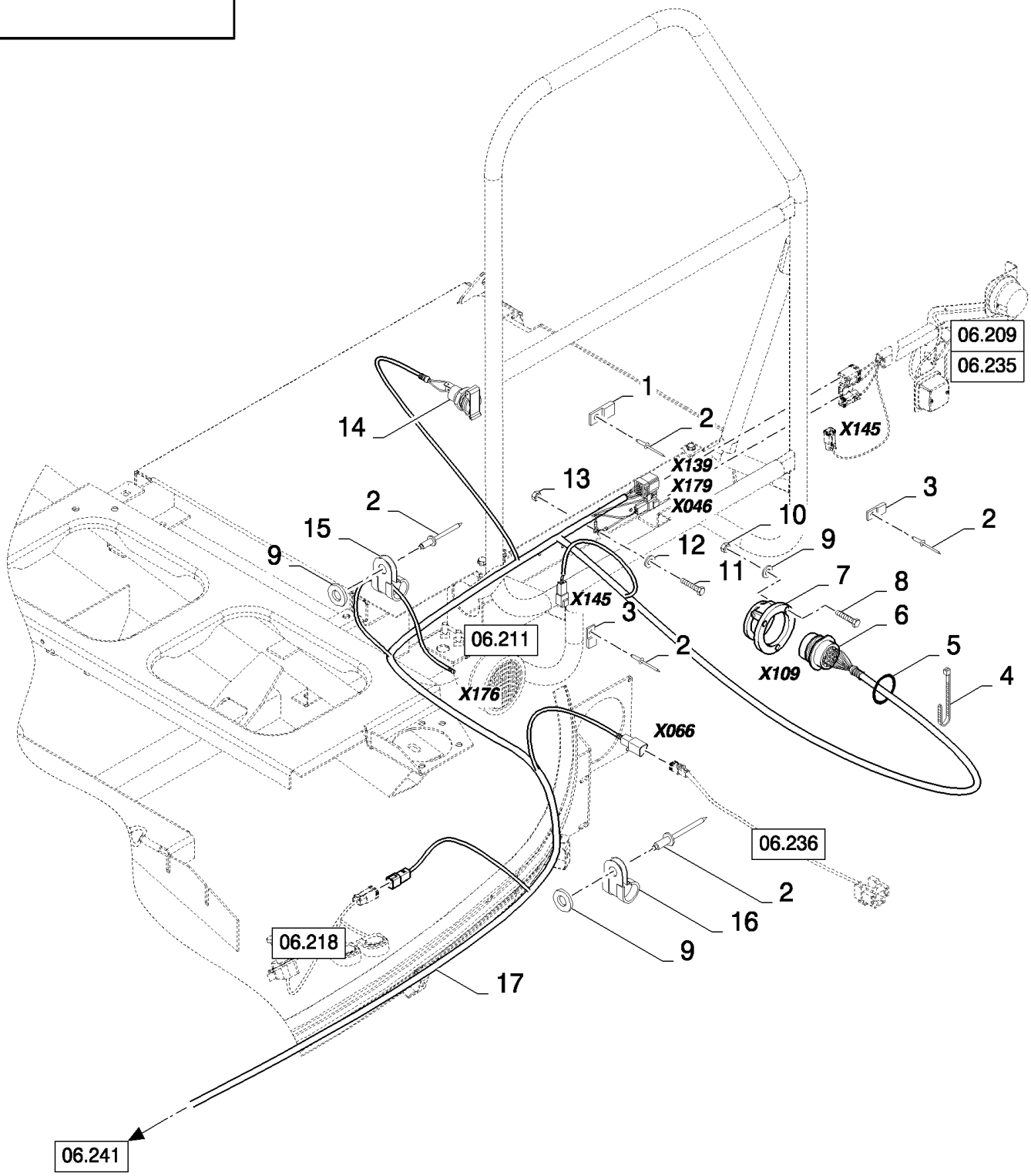

06.242(01) WIRING HARNESS

ссылка	Номер детали	Кол-во	Описание
1	84807267	1	CONNECTOR, WIRE,
2	NS	AR	NOT SERVICED, RIVET
3	84058832	2	CLIP,
4	89993154	9	CLAMP,
5	84037188	1	O-RING, , BSN C415
6	767455	1	DUST CAP, {PP:80767455} , BSN C415
6	87105683	1	CAP, , ASN D416
7	86606228	1	COVER, , BSN C415
8	120098	5	BOLT, Hex, M5 x 20, 8.8, Full Thd, , BSN C415
9	322356	7	WASHER, LOCK, {PP:80322356} 5MM
10	86508813	5	NUT, M5, Cl 8, , BSN C415
11	120100	1	BOLT, Hex, M6 x 20, 8.8,
12	322357	1	WASHER, SPRING, Belleville, M6,
13	15896221	1	NUT, M6, Cl 10,
14	374418	1	SOCKET, POWER, {PP:80374418}
15	84818443	1	CLAMP,
16	9503932	1	CLAMP, {PP:89503932} , BSN C363
16	84818445	1	CLAMP, , ASN D364
17	84435760	1	HARNESS, WIRE, , SEE FIGURE 06.511
17	84459754	1	HARNESS, WIRE, , FOR CL560 ONLY, SEE FIGURE 06.511 02

06.243(01) UNLOADING AUGER - SENSOR

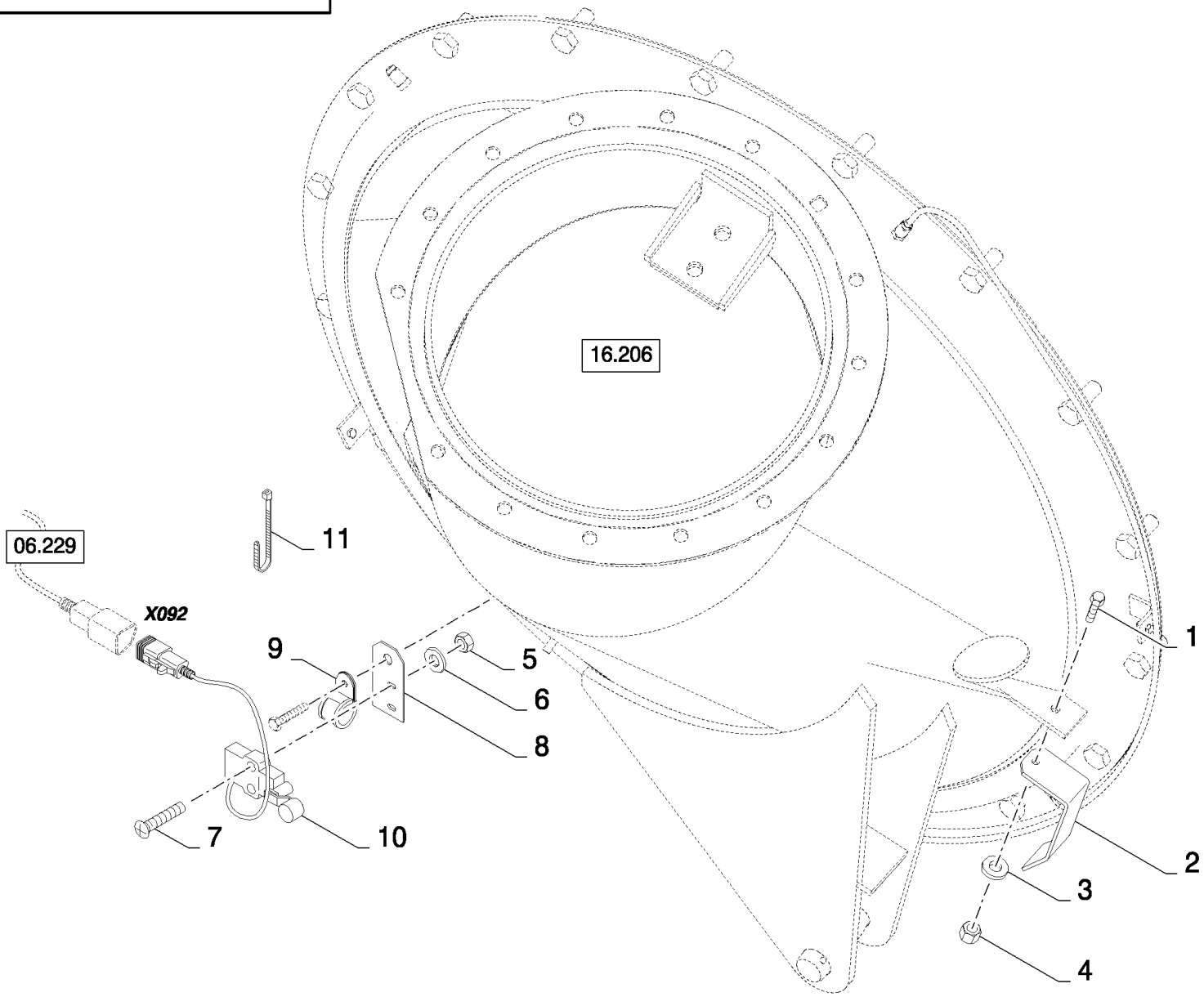

CS660 COMBINE BASE UNIT (1/03-) - Electrical System

06.243(01) UNLOADING AUGER - SENSOR

ссылка	Номер детали	Кол-во	Описание
1	120100	1	BOLT, Hex, M6 x 20, 8.8,
2	84439459	1	BRACKET,
3	322357	1	WASHER, SPRING, Belleville, M6,
4	15896221	1	NUT, M6, Cl 10,
5	100012	2	NUT, M4, Cl 8,
6	322355	2	WASHER, SPRING, Belleville, M4,
7	86511824	2	SCREW, Cross Pan Hd, M4 x 20,
8	84439463	1	BRACKET,
9	675162	1	CLAMP, WIRE, {PP:80675162} M6.3, Insul, 3/8" Bolt,
10	84807307	1	SWITCH,
11	89993154	1	CLAMP,

06.501(01) CABLE HARNESS : 80264517

06.501(01) CABLE HARNESS : 80264517

ссылка	Номер детали	Кол-во	Описание
1	353969		CONNECTOR, ELEC, {PP:80353969}
2	350674		CONNECTOR, WIRE, {PP:80350674}
3	430026		TERMINAL, {PP:80430026}

06.504(01) CABLE HARNESS : 84400865

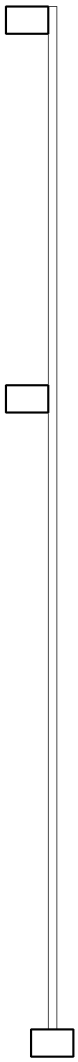

06.504(01) CABLE HARNESS : 84400865

ссылка	Номер детали	Кол-во	Описание

06.505(01) CABLE HARNESS : 84433641- C409

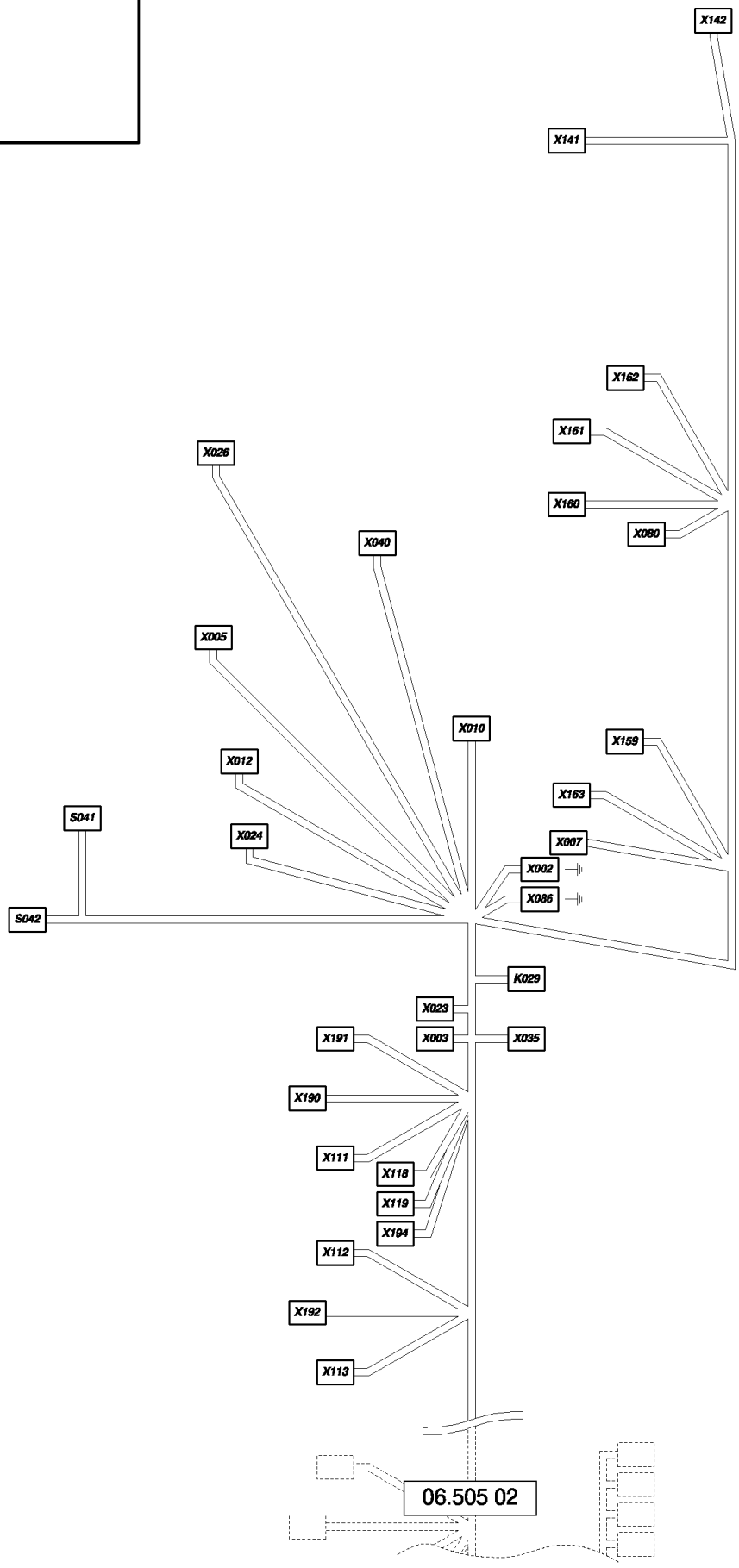

06.505(01) CABLE HARNESS : 84433641- C409

ссылка	Номер детали	Кол-во	Описание
	K029439588		SUPPORT, K29
	334588		TERMINAL, {PP:80334588}
	S041441159		CONNECTOR, WIRE, S41
	441166		TERMINAL, {PP:80441166}
	441167		TERMINAL, {PP:80441167}
	S042426199		TERMINAL, S42
	X00284807676		CONNECTOR, WIRE, X2
	84814863		CONNECTOR, WIRE,
	84814862		CONNECTOR, WIRE,
	84807678		CABLE TERMINAL,
	X003335483		TERMINAL, X3
	455780		TERMINAL, {PP:80455780}
	335482		TERMINAL, {PP:80335482}
	X00584400777		TAB, LOCKING, X5
	86500036		PIN, ELECT TERMINAL,
	X00784400780		CONNECTOR, WIRE, X7
	84068583		PLUG,
	86500036		PIN, ELECT TERMINAL,
	X01084807216		CONNECTOR, WIRE, X10
	84068583		PLUG,
	84807680		TAB, LOCKING,
	86500036		PIN, ELECT TERMINAL,
	84807672		CABLE TERMINAL,
	X01284400780		CONNECTOR, WIRE, X12
	84068583		PLUG,
	86500036		PIN, ELECT TERMINAL,
	X02384074635		CONNECTOR, WIRE, X23
	86500036		PIN, ELECT TERMINAL,
	84074639		CONNECTOR, WIRE,
	X02484400772		CONNECTOR, WIRE, X24
	84068583		PLUG,
	86500036		PIN, ELECT TERMINAL,
	84807672		CABLE TERMINAL,
	X02684400777		TAB, LOCKING, X26
	86500036		PIN, ELECT TERMINAL,
	X03584074254		CONNECTOR, WIRE, X35
	86500035		TERMINAL,
	X04084400774		CONNECTOR, WIRE, X40
	84068583		PLUG,
	86500036		PIN, ELECT TERMINAL,
	X080441159		CONNECTOR, WIRE, X80
	441166		TERMINAL, {PP:80441166}
	X086455780		TERMINAL, X86
	335482		TERMINAL, {PP:80335482}
	84818184		CABLE TERMINAL,

06.505(01) CABLE HARNESS : 84433641- C409

ссылка	Номер детали	Кол-во	Описание
X1119811261			CONNECTOR, ELEC, X111
	84053064		LABEL,
	9813989		TERMINAL, {PP:89813989}
X1129811261			CONNECTOR, ELEC, X112
	84053064		LABEL,
	9813989		TERMINAL, {PP:89813989}
X1139811261			CONNECTOR, ELEC, X113
	84053064		LABEL,
	9813989		TERMINAL, {PP:89813989}
X11880354118			TERMINAL, X118
X11980354118			TERMINAL, X119
X14184058011			CONNECTOR, WIRE, X141
	84068583		PLUG,
	86500036		PIN, ELECT TERMINAL,
X14284058011			CONNECTOR, WIRE, X142
	84068583		PLUG,
	86500036		PIN, ELECT TERMINAL,
X15984400774			CONNECTOR, WIRE, X159
	84068583		PLUG,
	86500036		PIN, ELECT TERMINAL,
	84807672		CABLE TERMINAL,
X16084814757			CONNECTOR, WIRE, X160
	84814764		CABLE TERMINAL,
X16184814759			CONNECTOR, WIRE, X161
	84814764		CABLE TERMINAL,
X16284814758			CONNECTOR, WIRE, X162
	84814764		CABLE TERMINAL,
	84814762		CABLE TERMINAL,
X16384400777			TAB, LOCKING, X163
	84068583		PLUG,
	86500036		PIN, ELECT TERMINAL,
X1909811261			CONNECTOR, ELEC, X190
	84053064		LABEL,
	9813989		TERMINAL, {PP:89813989}
X19180354118			TERMINAL, X191
X19280354118			TERMINAL, X192
X19489505300			LINK, CONNECTING, X194
	86500035		TERMINAL,

06.505(02) CABLE HARNESS : 84433641- C409

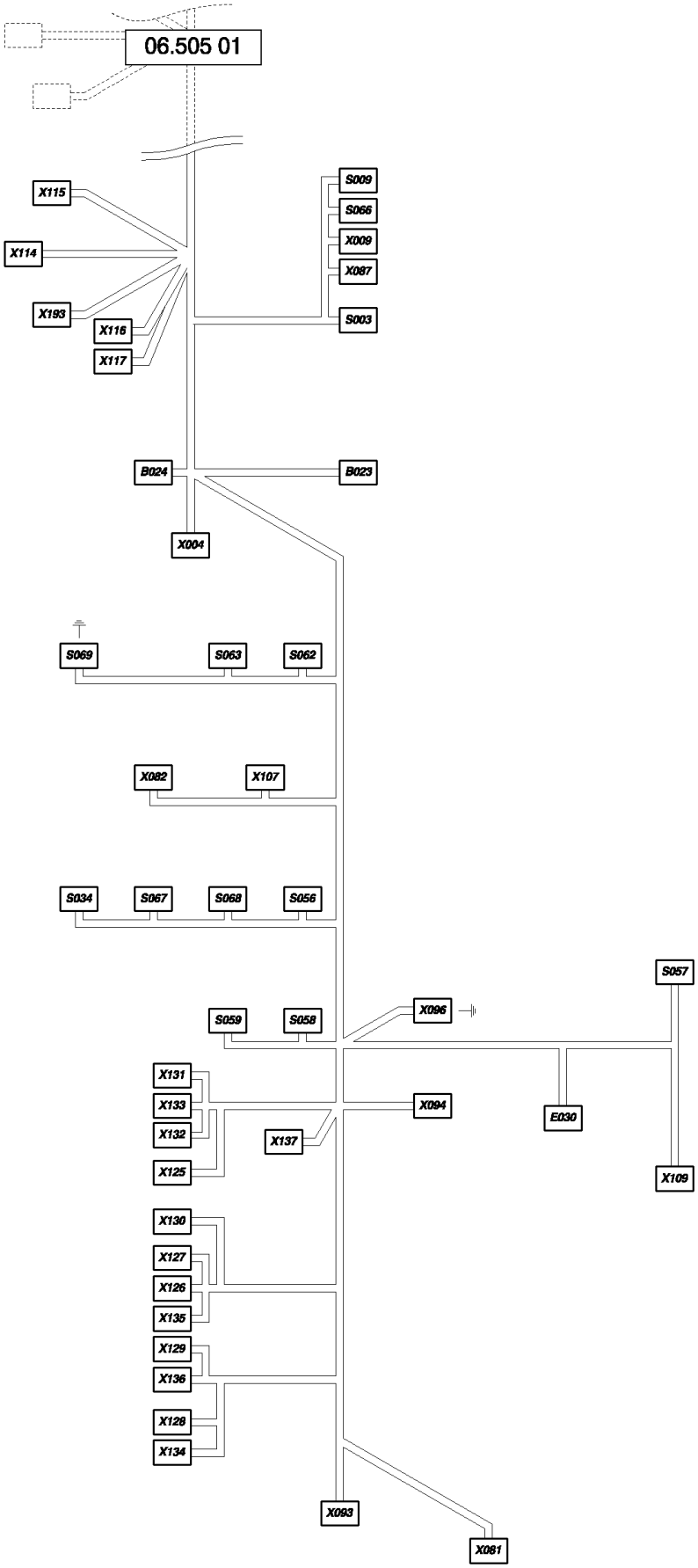

06.505(02) CABLE HARNESS : 84433641- C409

ссылка	Номер детали	Кол-во	Описание
	B023350674		CONNECTOR, WIRE, B23
	9818548		TERMINAL, {PP:89818548}
	430026		TERMINAL, {PP:80430026}
	B024350674		CONNECTOR, WIRE, B24
	9818548		TERMINAL, {PP:89818548}
	430026		TERMINAL, {PP:80430026}
	E030441159		CONNECTOR, WIRE, E30
	441166		TERMINAL, {PP:80441166}
	441167		TERMINAL, {PP:80441167}
	S003441159		CONNECTOR, WIRE, S3
	441166		TERMINAL, {PP:80441166}
	S00984607379		CONNECTOR, WIRE, S9
	334588		TERMINAL, {PP:80334588}
	S03484607379		CONNECTOR, WIRE, S34
	334588		TERMINAL, {PP:80334588}
	334594		TERMINAL,
	S05684607379		CONNECTOR, WIRE, S56
	334588		TERMINAL, {PP:80334588}
	334594		TERMINAL, {PP:80334594}
	S057441159		CONNECTOR, WIRE, S57
	441166		TERMINAL, {PP:80441166}
	S05884607379		CONNECTOR, WIRE, S58
	334588		TERMINAL, {PP:80334588}
	334594		TERMINAL, {PP:80334594}
	S05984607379		CONNECTOR, WIRE, S59
	334588		TERMINAL, {PP:80334588}
	334594		TERMINAL, {PP:80334594}
	S06284807268		CONNECTOR, WIRE, S62
	84807270		CABLE TERMINAL,
	84807269		CONNECTOR, WIRE,
	S06384607379		CONNECTOR, WIRE, S63
	334588		TERMINAL, {PP:80334588}
	334594		TERMINAL, {PP:80334594}
	S06684607379		CONNECTOR, WIRE, S66
	334588		TERMINAL, {PP:80334588}
	S06784607379		CONNECTOR, WIRE, S67
	334588		TERMINAL, {PP:80334588}
	334594		TERMINAL, {PP:80334594}
	S06884607379		CONNECTOR, WIRE, S68
	334588		TERMINAL, {PP:80334588}
	334594		TERMINAL, {PP:80334594}
	S06984607379		CONNECTOR, WIRE, S69
	334588		TERMINAL, {PP:80334588}
	334594		TERMINAL, {PP:80334594}
	X00484818192		CONNECTOR, ELEC, X4

06.505(02) CABLE HARNESS : 84433641- C409

ссылка	Номер детали	Кол-во	Описание
	445521		TERMINAL, {PP:80445521}
	X009441159		CONNECTOR, WIRE, X9
	441167		TERMINAL, {PP:80441167}
	X081447569		CONNECTOR, WIRE, X81
	445521		TERMINAL, {PP:80445521}
	X0829818033		CONNECTOR, WIRE, X82
	445521		TERMINAL, {PP:80445521}
	X087441159		CONNECTOR, WIRE, X87
	441167		TERMINAL, {PP:80441167}
	X09384074631		CONNECTOR, WIRE, X93
	86500036		PIN, ELECT TERMINAL,
	84074638		PLUG,
	X09484400775		CONNECTOR, WIRE, X94
	86500035		TERMINAL,
	X096335483		TERMINAL, X96
	455780		TERMINAL, {PP:80455780}
	84818184		CABLE TERMINAL,
	X107334595		TERMINAL, X107
	334588		TERMINAL, {PP:80334588}
	X10984007631		TERMINAL, X109
	334588		TERMINAL, {PP:80334588}
	X1149811261		CONNECTOR, ELEC, X114
	84053064		LABEL,
	9813989		TERMINAL, {PP:89813989}
	X1159811261		CONNECTOR, ELEC, X115
	84053064		LABEL,
	9813989		TERMINAL, {PP:89813989}
	X11680354118		TERMINAL, X116
	80444853		CABLE TERMINAL,
	X11780354118		TERMINAL, X117
	80335480		TERMINAL,
	X12589505300		LINK, CONNECTING, X125
	84053064		LABEL,
	89506052		CABLE,
	89506053		TERMINAL,
	X12689505300		LINK, CONNECTING, X126
	84053064		LABEL,
	89506052		CABLE,
	X12789505300		LINK, CONNECTING, X127
	84053064		LABEL,
	89506052		CABLE,
	X12889505300		LINK, CONNECTING, X128
	84053064		LABEL,
	89506052		CABLE,
	89506053		TERMINAL,

06.505(02) CABLE HARNESS : 84433641- C409

ссылка	Номер детали	Кол-во	Описание
	X12989505300		LINK, CONNECTING, X129
	84053064		LABEL,
	89506052		CABLE,
	X13089505300		LINK, CONNECTING, X130
	84053064		LABEL,
	89506052		CABLE,
	89506053		TERMINAL,
	X13189505300		LINK, CONNECTING, X131
	84053064		LABEL,
	89506052		CABLE,
	89506053		TERMINAL,
	X13289505300		LINK, CONNECTING, X132
	84053064		LABEL,
	89506052		CABLE,
	89506053		TERMINAL,
	X13380354118		TERMINAL, X133
	X13480354118		TERMINAL, X134
	X13580354118		TERMINAL, X135
	X13680354118		TERMINAL, X136
	X13780354118		TERMINAL, X137
	X19380354118		TERMINAL, X193

06.505(10) CABLE HARNESS : 84457770 - F410479

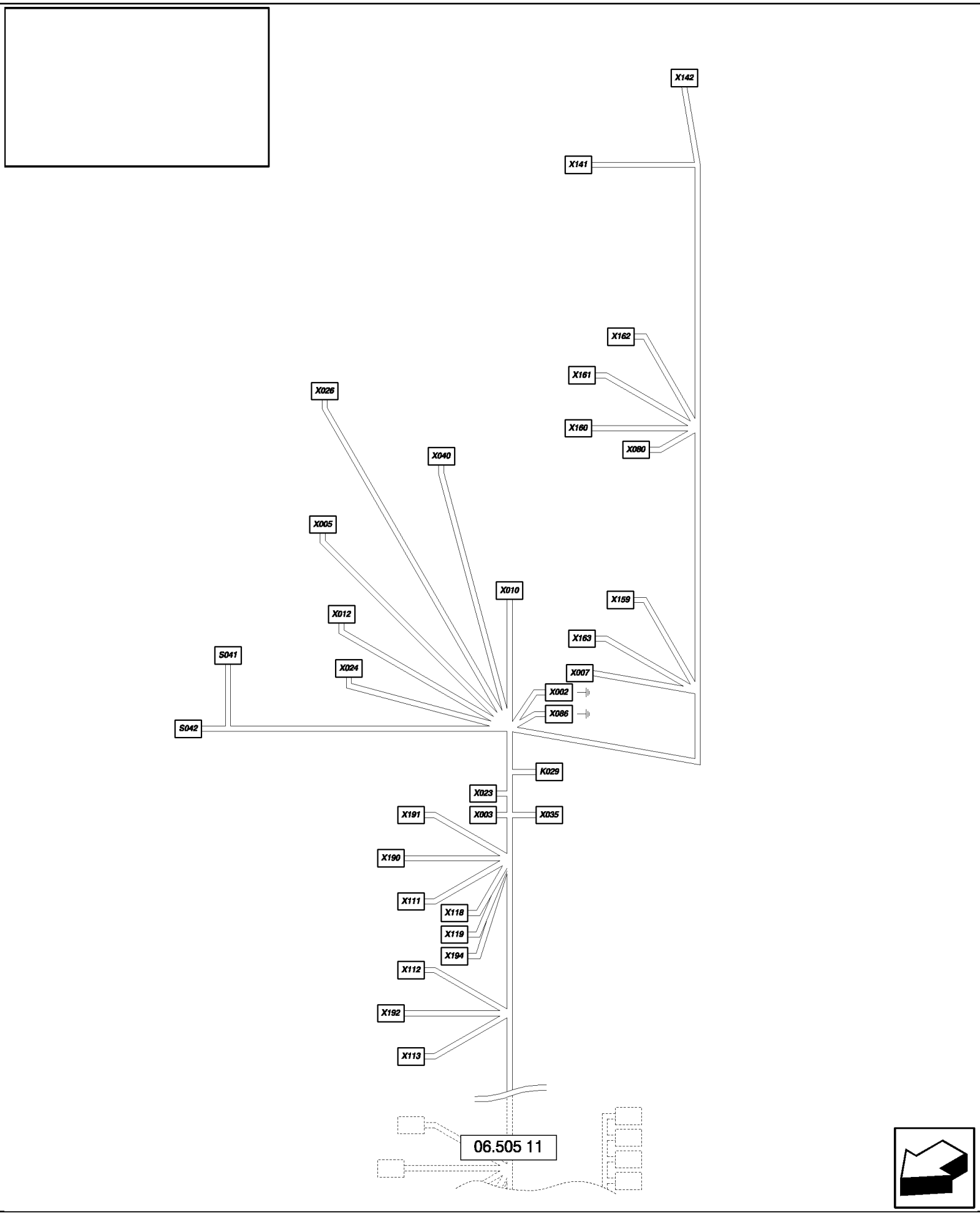

06.505(10) CABLE HARNESS : 84457770 - F410479

ссылка	Номер детали	Кол-во	Описание
	K029439588		SUPPORT, K29
	334588		TERMINAL, {PP:80334588}
	S041441159		CONNECTOR, WIRE, S41
	441166		TERMINAL, {PP:80441166}
	441167		TERMINAL, {PP:80441167}
	S042426199		TERMINAL, S42
	X00284807676		CONNECTOR, WIRE, X2
	84814863		CONNECTOR, WIRE,
	84814862		CONNECTOR, WIRE,
	84807678		CABLE TERMINAL,
	X003335483		TERMINAL, X3
	455780		TERMINAL, {PP:80455780}
	335482		TERMINAL, {PP:80335482}
	X00584400777		TAB, LOCKING, X5
	86500036		PIN, ELECT TERMINAL,
	X00784400780		CONNECTOR, WIRE, X7
	84068583		PLUG,
	86500036		PIN, ELECT TERMINAL,
	X01084807216		CONNECTOR, WIRE, X10
	84068583		PLUG,
	84807680		TAB, LOCKING,
	86500036		PIN, ELECT TERMINAL,
	84807672		CABLE TERMINAL,
	X01284400780		CONNECTOR, WIRE, X12
	84068583		PLUG,
	86500036		PIN, ELECT TERMINAL,
	X02384074635		CONNECTOR, WIRE, X23
	86500036		PIN, ELECT TERMINAL,
	84074639		CONNECTOR, WIRE,
	X02484400772		CONNECTOR, WIRE, X24
	84068583		PLUG,
	86500036		PIN, ELECT TERMINAL,
	84807672		CABLE TERMINAL,
	X02684400777		TAB, LOCKING, X26
	86500036		PIN, ELECT TERMINAL,
	X03584074254		CONNECTOR, WIRE, X35
	86500035		TERMINAL,
	X04084400774		CONNECTOR, WIRE, X40
	84068583		PLUG,
	86500036		PIN, ELECT TERMINAL,
	X080441159		CONNECTOR, WIRE, X80
	441166		TERMINAL, {PP:80441166}
	X086455780		TERMINAL, X86
	335482		TERMINAL, {PP:80335482}
	84818184		CABLE TERMINAL,

06.505(10) CABLE HARNESS : 84457770 - F410479

ссылка	Номер детали	Кол-во	Описание
X1119811261			CONNECTOR, ELEC, X111
	84053064		LABEL,
	9813989		TERMINAL, {PP:89813989}
X1129811261			CONNECTOR, ELEC, X112
	84053064		LABEL,
	9813989		TERMINAL, {PP:89813989}
X1139811261			CONNECTOR, ELEC, X113
	84053064		LABEL,
	9813989		TERMINAL, {PP:89813989}
X11880354118			TERMINAL, X118
X11980354118			TERMINAL, X119
X14184058011			CONNECTOR, WIRE, X141
	84068583		PLUG,
	86500036		PIN, ELECT TERMINAL,
X14284058011			CONNECTOR, WIRE, X142
	84068583		PLUG,
	86500036		PIN, ELECT TERMINAL,
X15984400774			CONNECTOR, WIRE, X159
	84068583		PLUG,
	86500036		PIN, ELECT TERMINAL,
	84807672		CABLE TERMINAL,
X16084400777			TAB, LOCKING, X160
	86500036		PIN, ELECT TERMINAL,
X16184400780			CONNECTOR, WIRE, X161
	86500036		PIN, ELECT TERMINAL,
X16284400772			CONNECTOR, WIRE, X162
	84068583		PLUG,
	84807672		CABLE TERMINAL,
	86500036		PIN, ELECT TERMINAL,
X16384400777			TAB, LOCKING, X163
	84068583		PLUG,
	86500036		PIN, ELECT TERMINAL,
X1909811261			CONNECTOR, ELEC, X190
	84053064		LABEL,
	9813989		TERMINAL, {PP:89813989}
X19180354118			TERMINAL, X191
X19280354118			TERMINAL, X192
X19489505300			LINK, CONNECTING, X194
	86500035		TERMINAL,

06.505(11) CABLE HARNESS : 84457770 - F410479

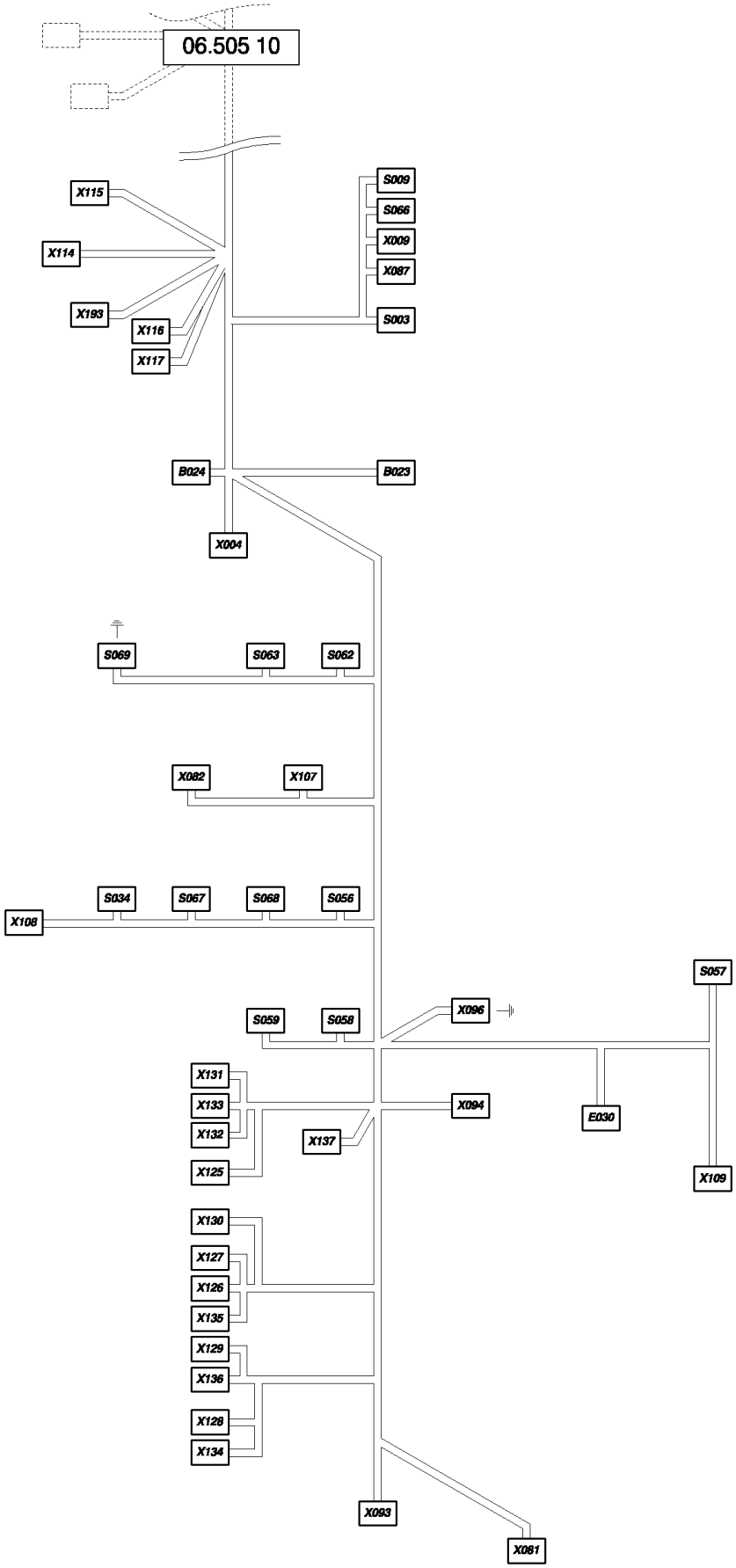

06.505(11) CABLE HARNESS : 84457770 - F410479

ссылка	Номер детали	Кол-во	Описание
B023350674			CONNECTOR, WIRE, B23
	9818548		TERMINAL, {PP:89818548}
	430026		TERMINAL, {PP:80430026}
B024350674			CONNECTOR, WIRE, B24
	9818548		TERMINAL, {PP:89818548}
	430026		TERMINAL, {PP:80430026}
E030441159			CONNECTOR, WIRE, E30
	441166		TERMINAL, {PP:80441166}
	441167		TERMINAL, {PP:80441167}
	919415		TERMINAL, {PP:80919415}
S003441159			CONNECTOR, WIRE, S3
	441166		TERMINAL, {PP:80441166}
S00984607379			CONNECTOR, WIRE, S9
	334588		TERMINAL, {PP:80334588}
S03484607379			CONNECTOR, WIRE, S34
	334588		TERMINAL, {PP:80334588}
	334594		TERMINAL, {PP:80334594}
S05684607379			CONNECTOR, WIRE, S56
	334588		TERMINAL, {PP:80334588}
	334594		TERMINAL, {PP:80334594}
S057441159			CONNECTOR, WIRE, S57
	441166		TERMINAL, {PP:80441166}
S05884607379			CONNECTOR, WIRE, S58
	334588		TERMINAL, {PP:80334588}
	334594		TERMINAL, {PP:80334594}
S05984607379			CONNECTOR, WIRE, S59
	334588		TERMINAL, {PP:80334588}
	334594		TERMINAL, {PP:80334594}
S06284807268			CONNECTOR, WIRE, S62
	84807270		CABLE TERMINAL,
	84807269		CONNECTOR, WIRE,
S06384607379			CONNECTOR, WIRE, S63
	334588		TERMINAL, {PP:80334588}
	334594		TERMINAL, {PP:80334594}
S06684607379			CONNECTOR, WIRE, S66
	334588		TERMINAL, {PP:80334588}
S06784607379			CONNECTOR, WIRE, S67
	334588		TERMINAL, {PP:80334588}
	334594		TERMINAL, {PP:80334594}
S06884607379			CONNECTOR, WIRE, S68
	334588		TERMINAL, {PP:80334588}
	334594		TERMINAL, {PP:80334594}
S06984607379			CONNECTOR, WIRE, S69
	334588		TERMINAL, {PP:80334588}
	334594		TERMINAL, {PP:80334594}

06.505(11) CABLE HARNESS : 84457770 - F410479

ссылка	Номер детали	Кол-во	Описание
X00484818192			CONNECTOR, ELEC, X4
	445521		TERMINAL, {PP:80445521}
X009441159			CONNECTOR, WIRE, X9
	919415		TERMINAL, {PP:80919415}
X081447569			CONNECTOR, WIRE, X81
	445521		TERMINAL, {PP:80445521}
X0829818033			CONNECTOR, WIRE, X82
	445521		TERMINAL, {PP:80445521}
X087441159			CONNECTOR, WIRE, X87
	919415		TERMINAL, {PP:80919415}
X09384074631			CONNECTOR, WIRE, X93
	86500036		PIN, ELECT TERMINAL,
	84074638		PLUG,
X09484400775			CONNECTOR, WIRE, X94
	86500035		TERMINAL,
X096335483			TERMINAL, X96
	455780		TERMINAL, {PP:80455780}
	84818184		CABLE TERMINAL,
X107334595			TERMINAL, X107
	334588		TERMINAL, {PP:80334588}
X108446133			CONNECTOR, ELEC, X108
	441166		TERMINAL, {PP:80441166}
	919415		TERMINAL, {PP:80919415}
X10984007631			TERMINAL, X109
	334588		TERMINAL, {PP:80334588}
X1149811261			CONNECTOR, ELEC, X114
	84053064		LABEL,
	9813989		TERMINAL, {PP:89813989}
X1159811261			CONNECTOR, ELEC, X115
	84053064		LABEL,
	9813989		TERMINAL, {PP:89813989}
X11680354118			TERMINAL, X116
	80444853		CABLE TERMINAL,
X11780354118			TERMINAL, X117
	80335480		TERMINAL,
X12589505300			LINK, CONNECTING, X125
	84053064		LABEL,
	89506052		CABLE,
	89506053		TERMINAL,
X12689505300			LINK, CONNECTING, X126
	84053064		LABEL,
	89506052		CABLE,
X12789505300			LINK, CONNECTING, X127
	84053064		LABEL,
	89506052		CABLE,

06.505(11) CABLE HARNESS : 84457770 - F410479

ссылка	Номер детали	Кол-во	Описание
	X12889505300		LINK, CONNECTING, X128
	84053064		LABEL,
	89506052		CABLE,
	89506053		TERMINAL,
	X12989505300		LINK, CONNECTING, X129
	84053064		LABEL,
	89506052		CABLE,
	X13089505300		LINK, CONNECTING, X130
	84053064		LABEL,
	89506052		CABLE,
	89506053		TERMINAL,
	X13189505300		LINK, CONNECTING, X131
	84053064		LABEL,
	89506052		CABLE,
	89506053		TERMINAL,
	X13289505300		LINK, CONNECTING, X132
	84053064		LABEL,
	89506052		CABLE,
	89506053		TERMINAL,
	X13380354118		TERMINAL, X133
	X13480354118		TERMINAL, X134
	X13580354118		TERMINAL, X135
	X13680354118		TERMINAL, X136
	X13780354118		TERMINAL, X137
	X19380354118		TERMINAL, X193

06.505(21) CABLE HARNESS : 84462157 - D480

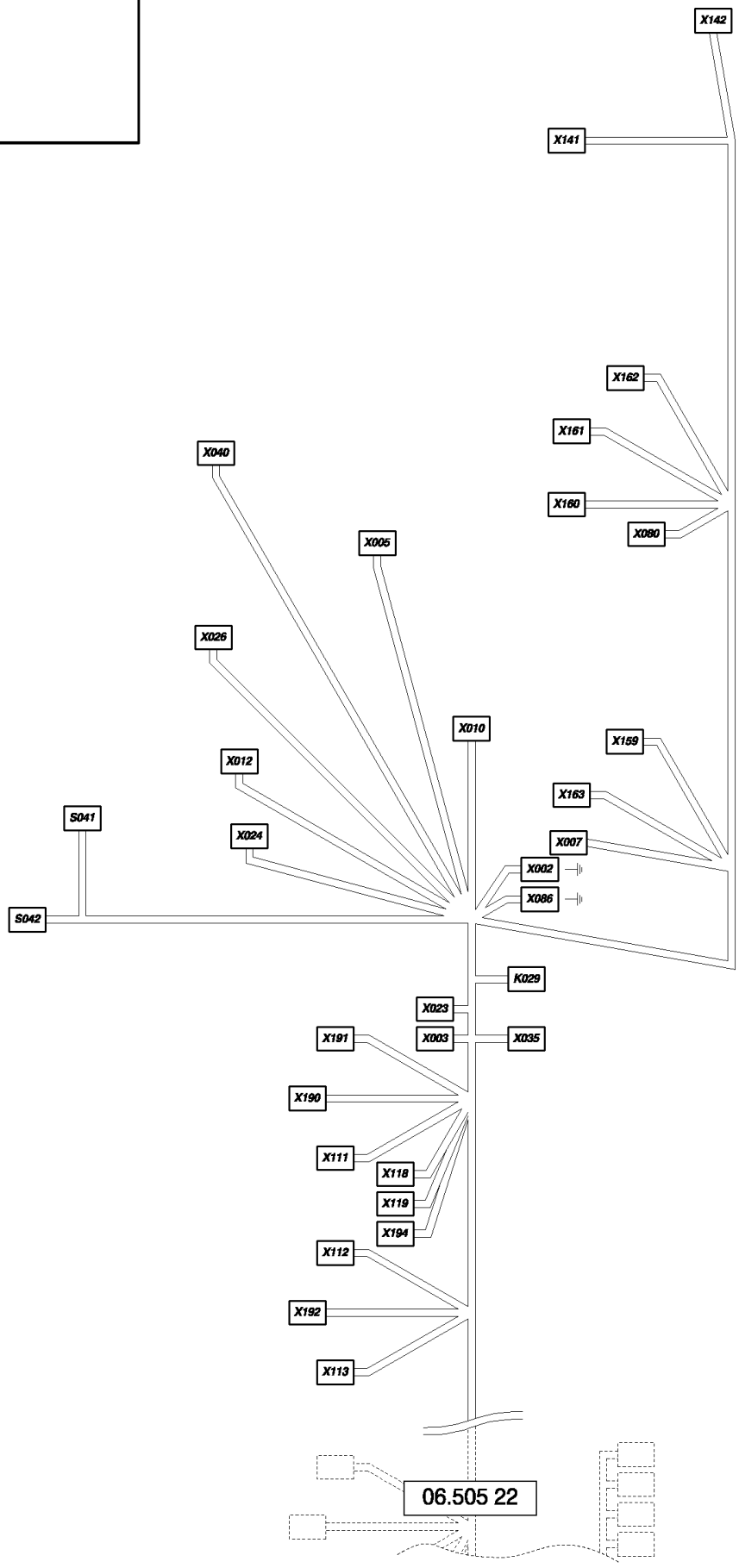

06.505(21) CABLE HARNESS : 84462157 - D480

ссылка	Номер детали	Кол-во	Описание
	K029439588		SUPPORT, K29
	334588		TERMINAL,
	S041441166		TERMINAL, S41
	441167		TERMINAL,
	441159		CONNECTOR, WIRE,
	S042426199		TERMINAL, S42
	X002455780		TERMINAL, X2
	X003335483		TERMINAL, X3
	455780		TERMINAL,
	335482		TERMINAL,
	X00584400777		TAB, LOCKING, X5
	86500036		PIN, ELECT TERMINAL,
	X00784400780		CONNECTOR, WIRE, X7
	86500036		PIN, ELECT TERMINAL,
	84068583		PLUG,
	X01084807216		CONNECTOR, WIRE, X10
	86500036		PIN, ELECT TERMINAL,
	84807672		CABLE TERMINAL,
	X01284400780		CONNECTOR, WIRE, X12
	86500036		PIN, ELECT TERMINAL,
	X02384074635		CONNECTOR, WIRE, X23
	84074639		CONNECTOR, WIRE,
	86500036		PIN, ELECT TERMINAL,
	X02484400772		CONNECTOR, WIRE, X24
	86500036		PIN, ELECT TERMINAL,
	84807672		CABLE TERMINAL,
	84068583		PLUG,
	X02684400777		TAB, LOCKING, X26
	86500036		PIN, ELECT TERMINAL,
	X03584074254		CONNECTOR, WIRE, X35
	86500035		TERMINAL,
	X04084400774		CONNECTOR, WIRE, X40
	86500036		PIN, ELECT TERMINAL,
	84068583		PLUG,
	X080441166		TERMINAL, X80
	441159		CONNECTOR, WIRE,
	X086335483		TERMINAL, X86
	455780		TERMINAL,
	84818184		CABLE TERMINAL,
	X1119811261		CONNECTOR, ELEC, X111
	9813989		TERMINAL,
	X1129811261		CONNECTOR, ELEC, X112
	9813989		TERMINAL,
	X1139811261		CONNECTOR, ELEC, X113
	9813989		TERMINAL,

06.505(21) CABLE HARNESS : 84462157 - D480

ссылка	Номер детали	Кол-во	Описание
X118354118			TERMINAL, X118
X119354118			TERMINAL, X119
X14184058011			CONNECTOR, WIRE, X141
	86500036		PIN, ELECT TERMINAL,
X14284058011			CONNECTOR, WIRE, X142
	86500036		PIN, ELECT TERMINAL,
	84068583		PLUG,
X15984400774			CONNECTOR, WIRE, X159
	86500036		PIN, ELECT TERMINAL,
	84807672		CABLE TERMINAL,
	84068583		PLUG,
X16084400777			TAB, LOCKING, X160
	86500036		PIN, ELECT TERMINAL,
	84068583		PLUG,
X16184400780			CONNECTOR, WIRE, X161
	86500036		PIN, ELECT TERMINAL,
X16384400777			TAB, LOCKING, X163
	86500036		PIN, ELECT TERMINAL,
	84068583		PLUG,
X1909811261			CONNECTOR, ELEC, X190
	9813989		TERMINAL,
X191354118			TERMINAL, X191
X192354118			TERMINAL, X192
X19489505300			LINK, CONNECTING, X194
	89506052		CABLE,

06.505(22) CABLE HARNESS : 84462157 - D480

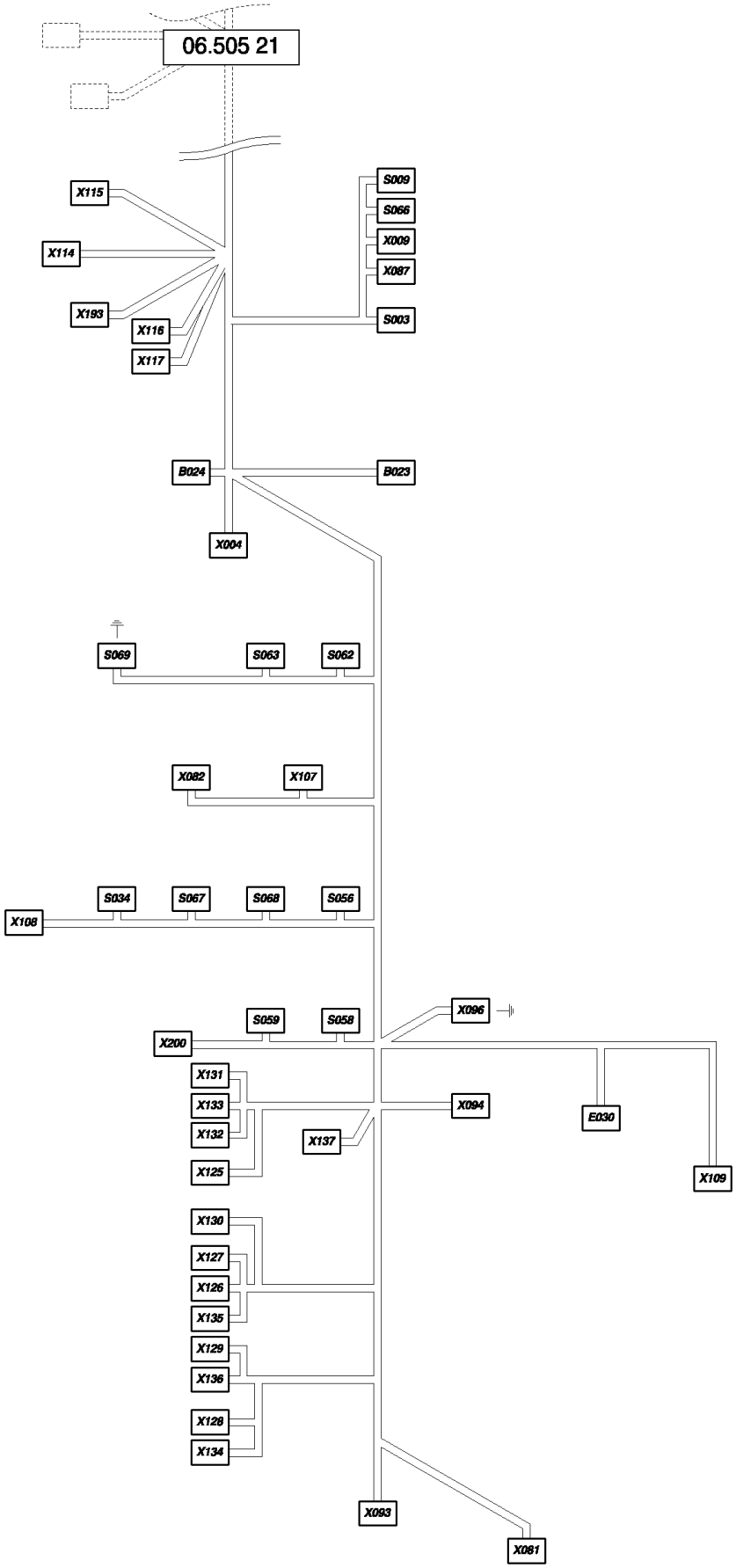

06.505(22) CABLE HARNESS : 84462157 - D480

ссылка	Номер детали	Кол-во	Описание
B02384462251		B23	
	430026		TERMINAL,
	350674		CONNECTOR, WIRE,
B02484462251		B24	
	430026		TERMINAL,
	350674		CONNECTOR, WIRE,
E030441166			TERMINAL, E30
	441167		TERMINAL,
	919415		TERMINAL,
	441159		CONNECTOR, WIRE,
S003441166			TERMINAL, S3
	441167		TERMINAL,
	441159		CONNECTOR, WIRE,
S00984607379			CONNECTOR, WIRE, S9
	334588		TERMINAL,
S03484607379			CONNECTOR, WIRE, S34
	334588		TERMINAL,
	334594		TERMINAL,
S05684607379			CONNECTOR, WIRE, S56
	334588		TERMINAL,
	334594		TERMINAL,
S05884607379			CONNECTOR, WIRE, S58
	334588		TERMINAL,
	334594		TERMINAL,
S05984607379			CONNECTOR, WIRE, S59
	334588		TERMINAL,
	334594		TERMINAL,
S06284807268			CONNECTOR, WIRE, S62
	84807269		CONNECTOR, WIRE,
	84807270		CABLE TERMINAL,
S06384607379			CONNECTOR, WIRE, S63
	334588		TERMINAL,
	334594		TERMINAL,
S06684607379			CONNECTOR, WIRE, S66
	334588		TERMINAL,
S06784607379			CONNECTOR, WIRE, S67
	334588		TERMINAL,
	334594		TERMINAL,
S06884607379			CONNECTOR, WIRE, S68
	334588		TERMINAL,
	334594		TERMINAL,
S06984607379			CONNECTOR, WIRE, S69
	334588		TERMINAL,
	334594		TERMINAL,
X00484818192			CONNECTOR, ELEC, X4

06.505(22) CABLE HARNESS : 84462157 - D480

ссылка	Номер детали	Кол-во	Описание
	445521		TERMINAL,
X009919415			TERMINAL, X9
	441159		CONNECTOR, WIRE,
X081447569			CONNECTOR, WIRE, X81
	445521		TERMINAL,
X0829818033			CONNECTOR, WIRE, X82
	445521		TERMINAL,
X087919415			TERMINAL, X87
	441159		CONNECTOR, WIRE,
X09384074631			CONNECTOR, WIRE, X93
	84074638		PLUG,
	86500036		PIN, ELECT TERMINAL,
X09484400775			CONNECTOR, WIRE, X94
	86500035		TERMINAL,
	84068583		PLUG,
X096335483			TERMINAL, X96
	455780		TERMINAL,
	84818184		CABLE TERMINAL,
X107334595			TERMINAL, X107
	334588		TERMINAL,
X108446133			CONNECTOR, ELEC, X108
	441166		TERMINAL,
	919415		TERMINAL,
X10984007631			TERMINAL, X109
	430026		TERMINAL,
X1149811261			CONNECTOR, ELEC, X114
	9813989		TERMINAL,
X1159811261			CONNECTOR, ELEC, X115
	9813989		TERMINAL,
X116354118			TERMINAL, X116
	80444853		CABLE TERMINAL,
X117354118			TERMINAL, X117
	80335480		TERMINAL,
X12589505300			LINK, CONNECTING, X125
	89506052		CABLE,
	89506053		TERMINAL,
X12689505300			LINK, CONNECTING, X126
	89506052		CABLE,
	89506053		TERMINAL,
X12789505300			LINK, CONNECTING, X127
	89506052		CABLE,
X12889505300			LINK, CONNECTING, X128
	89506052		CABLE,
	89506053		TERMINAL,
X12989505300			LINK, CONNECTING, X129

06.505(22) CABLE HARNESS : 84462157 - D480

ссылка	Номер детали	Кол-во	Описание
	89506052		CABLE,
X130	89505300		LINK, CONNECTING, X130
	89506052		CABLE,
	89506053		TERMINAL,
X131	89505300		LINK, CONNECTING, X131
	89506052		CABLE,
	89506053		TERMINAL,
X132	89505300		LINK, CONNECTING, X132
	89506052		CABLE,
	89506053		TERMINAL,
X133	354118		TERMINAL, X133
X134	354118		TERMINAL, X134
X135	354118		TERMINAL, X135
X136	354118		TERMINAL, X136
X137	354118		TERMINAL, X137
X193	354118		TERMINAL, X193
X200	446133		CONNECTOR, ELEC, X200
	441166		TERMINAL,

06.505(31) CABLE HARNESS : 87350993 - D492

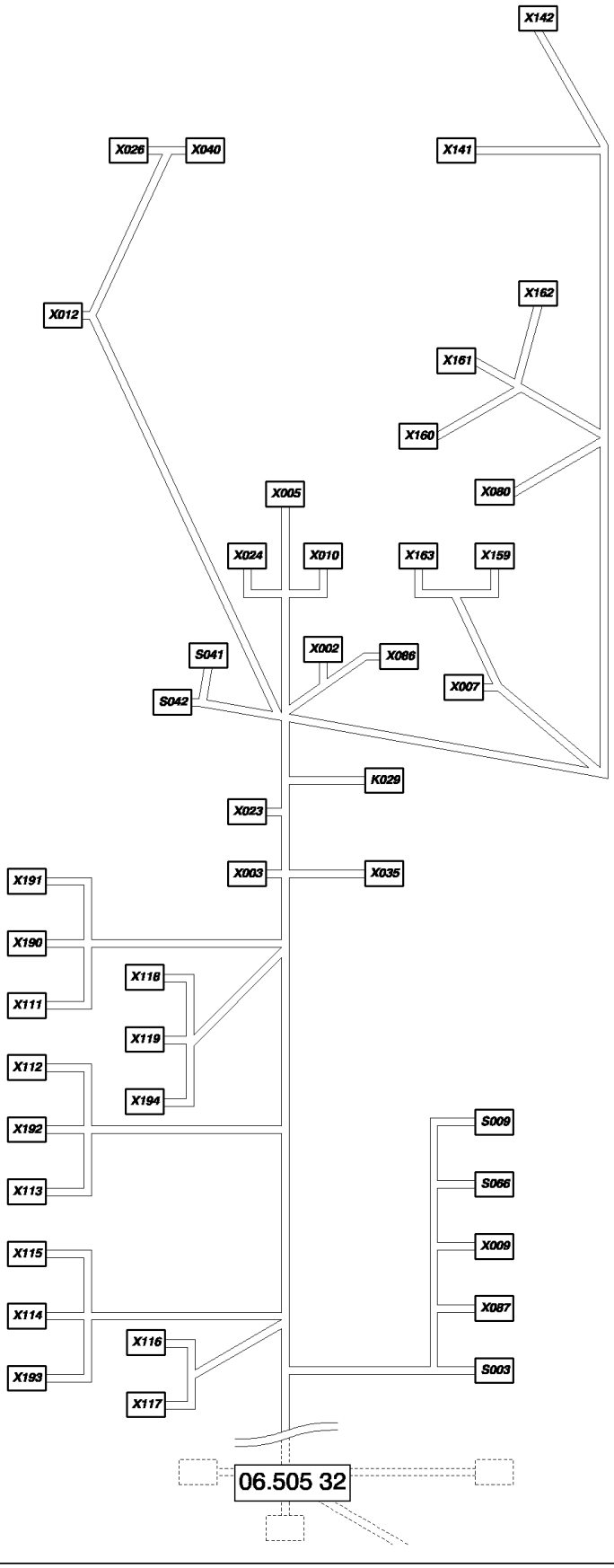

06.505(31) CABLE HARNESS : 87350993 - D492

ссылка	Номер детали	Кол-во	Описание
K029439588			SUPPORT, K29
	334588		TERMINAL,
S003441166			TERMINAL, S3
	441167		TERMINAL,
	441159		CONNECTOR, WIRE,
S00984607379			CONNECTOR, WIRE, S9
	334588		TERMINAL,
S041441166			TERMINAL, S41
	441167		TERMINAL,
	441159		CONNECTOR, WIRE,
S042426199			TERMINAL, S42
S06684607379			CONNECTOR, WIRE, S66
	334588		TERMINAL,
X002455780			TERMINAL, X2
X003335483			TERMINAL, X3
	455780		TERMINAL,
	335482		TERMINAL,
X00584400777			TAB, LOCKING, X5
	86500036		PIN, ELECT TERMINAL,
X00784400780			CONNECTOR, WIRE, X7
	86500036		PIN, ELECT TERMINAL,
	84068583		PLUG,
X009919415			TERMINAL, X9
	441159		CONNECTOR, WIRE,
X01084807216			CONNECTOR, WIRE, X10
	86500036		PIN, ELECT TERMINAL,
	84807672		CABLE TERMINAL,
	84807680		TAB, LOCKING,
X01284400780			CONNECTOR, WIRE, X12
	86500036		PIN, ELECT TERMINAL,
X02384074635			CONNECTOR, WIRE, X23
	86500036		PIN, ELECT TERMINAL,
	84074639		CONNECTOR, WIRE,
X02484400772			CONNECTOR, WIRE, X24
	86500036		PIN, ELECT TERMINAL,
	84807672		CABLE TERMINAL,
	84068583		PLUG,
X02684400777			TAB, LOCKING, X26
	86500036		PIN, ELECT TERMINAL,
X03584074254			CONNECTOR, WIRE, X35
	86500035		TERMINAL,
X04084400774			CONNECTOR, WIRE, X40
	86500036		PIN, ELECT TERMINAL,
	84068583		PLUG,
X080441166			TERMINAL, X80

06.505(31) CABLE HARNESS : 87350993 - D492

ссылка	Номер детали	Кол-во	Описание
	441159		CONNECTOR, WIRE,
X086335483			TERMINAL, X86
	455780		TERMINAL,
	84818184		CABLE TERMINAL,
X087919415			TERMINAL, X87
	441159		CONNECTOR, WIRE,
X1119811261			CONNECTOR, ELEC, X111
	9813989		TERMINAL,
X1129811261			CONNECTOR, ELEC, X112
	9813989		TERMINAL,
X1139811261			CONNECTOR, ELEC, X113
	9813989		TERMINAL,
X1149811216			X114
	9813989		TERMINAL,
X1159811216			X115
	9813989		TERMINAL,
X116354118			TERMINAL, X116
	444853		
X117354118			TERMINAL, X117
	335480		
X118354118			TERMINAL, X118
X119354118			TERMINAL, X119
X14184058011			CONNECTOR, WIRE, X141
	86500036		PIN, ELECT TERMINAL,
X14284058011			CONNECTOR, WIRE, X142
	86500036		PIN, ELECT TERMINAL,
	84068583		PLUG,
X15984400774			CONNECTOR, WIRE, X159
	86500036		PIN, ELECT TERMINAL,
	84807672		CABLE TERMINAL,
	84068583		PLUG,
X16084400777			TAB, LOCKING, X160
	86500036		PIN, ELECT TERMINAL,
	84068583		PLUG,
X16184400780			CONNECTOR, WIRE, X161
	86500036		PIN, ELECT TERMINAL,
X16284400772			CONNECTOR, WIRE, X162
	86500036		PIN, ELECT TERMINAL,
	84807672		CABLE TERMINAL,
	84068583		PLUG,
X16384400777			TAB, LOCKING, X163
	86500036		PIN, ELECT TERMINAL,
	84068583		PLUG,
X1909811261			CONNECTOR, ELEC, X190
	9813989		TERMINAL,

06.505(31) CABLE HARNESS : 87350993 - D492

ссылка	Номер детали	Кол-во	Описание
X191	354118		TERMINAL, X191
X192	354118		TERMINAL, X192
X193	354118		TERMINAL, X193
X194	9505300		CONNECTOR, WIRE, X194
	9506052		TERMINAL,

06.505(32) CABLE HARNESS : 87350993 - D492

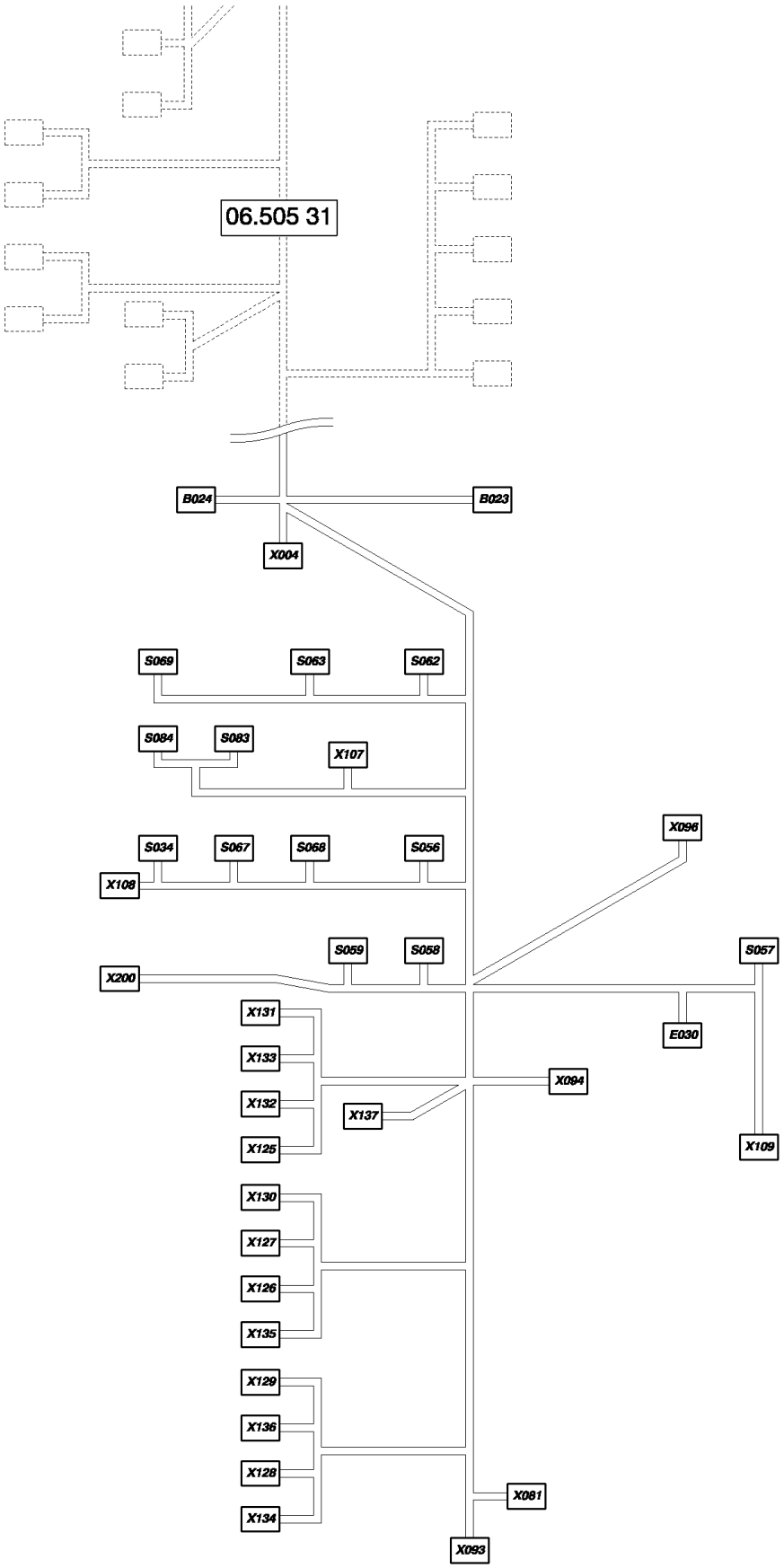

06.505(32) CABLE HARNESS : 87350993 - D492

ссылка	Номер детали	Кол-во	Описание
B02384462251		B23	
	430026		TERMINAL,
	350674		CONNECTOR, WIRE,
B02484462251		B24	
	430026		TERMINAL,
	350674		CONNECTOR, WIRE,
E030441166			TERMINAL, E30
	441167		TERMINAL,
	919415		TERMINAL,
	441159		CONNECTOR, WIRE,
S03484607379			CONNECTOR, WIRE, S34
	334588		TERMINAL,
	334594		TERMINAL,
S05684607379			CONNECTOR, WIRE, S56
	334588		TERMINAL,
	334594		TERMINAL,
S057441166			TERMINAL, S57
	441159		CONNECTOR, WIRE,
S05884607379			CONNECTOR, WIRE, S58
	334588		TERMINAL,
	334594		TERMINAL,
S05984607379			CONNECTOR, WIRE, S59
	334588		TERMINAL,
	334594		TERMINAL,
S06284807268			CONNECTOR, WIRE, S62
	84807270		CABLE TERMINAL,
	84807269		CONNECTOR, WIRE,
S06384607379			CONNECTOR, WIRE, S63
	334588		TERMINAL,
	334594		TERMINAL,
S06784607379			CONNECTOR, WIRE, S67
	334588		TERMINAL,
	334594		TERMINAL,
S06884607379			CONNECTOR, WIRE, S68
	334588		TERMINAL,
	334594		TERMINAL,
S06984607379			CONNECTOR, WIRE, S69
	334588		TERMINAL,
	334594		TERMINAL,
S083441159			CONNECTOR, WIRE, S83
	441166		TERMINAL,
S08487351127			S84
	87351119		
X00484818192			CONNECTOR, ELEC, X4
	445521		TERMINAL,

06.505(32) CABLE HARNESS : 87350993 - D492

ссылка	Номер детали	Кол-во	Описание
X081447569			CONNECTOR, WIRE, X81
	445521		TERMINAL,
X09384074631			CONNECTOR, WIRE, X93
	84074638		PLUG,
	86500036		PIN, ELECT TERMINAL,
X09484400775			CONNECTOR, WIRE, X94
	86500035		TERMINAL,
	84068583		PLUG,
X096335483			TERMINAL, X96
	455780		TERMINAL,
	84818184		CABLE TERMINAL,
X107334595			TERMINAL, X107
	334588		TERMINAL,
X108446133			CONNECTOR, ELEC, X108
	441166		TERMINAL,
	919415		TERMINAL,
X10984007631			TERMINAL, X109
	430026		TERMINAL,
X1259505300			CONNECTOR, WIRE, X125
	9506052		TERMINAL,
	9506053		TERMINAL,
X1269505300			CONNECTOR, WIRE, X126
	9506052		TERMINAL,
	9506053		TERMINAL,
X1279505300			CONNECTOR, WIRE, X127
	9506052		TERMINAL,
X1289505300			CONNECTOR, WIRE, X128
	9506052		TERMINAL,
	9506053		TERMINAL,
X1299505300			CONNECTOR, WIRE, X129
	9506052		TERMINAL,
X1309505300			CONNECTOR, WIRE, X130
	9506052		TERMINAL,
	9506053		TERMINAL,
X1319505300			CONNECTOR, WIRE, X131
	9506052		TERMINAL,
	9506053		TERMINAL,
X1329505300			CONNECTOR, WIRE, X132
	9506052		TERMINAL,
	9506053		TERMINAL,
X134354118			TERMINAL, X134
X135354118			TERMINAL, X135
X136354118			TERMINAL, X136
X137354118			TERMINAL, X137
X200446133			CONNECTOR, ELEC, X200

06.505(32) CABLE HARNESS : 87350993 - D492

ссылка	Номер детали	Кол-во	Описание
	441166		TERMINAL,

06.506(01) CABLE HARNESS : 84434104 - C375

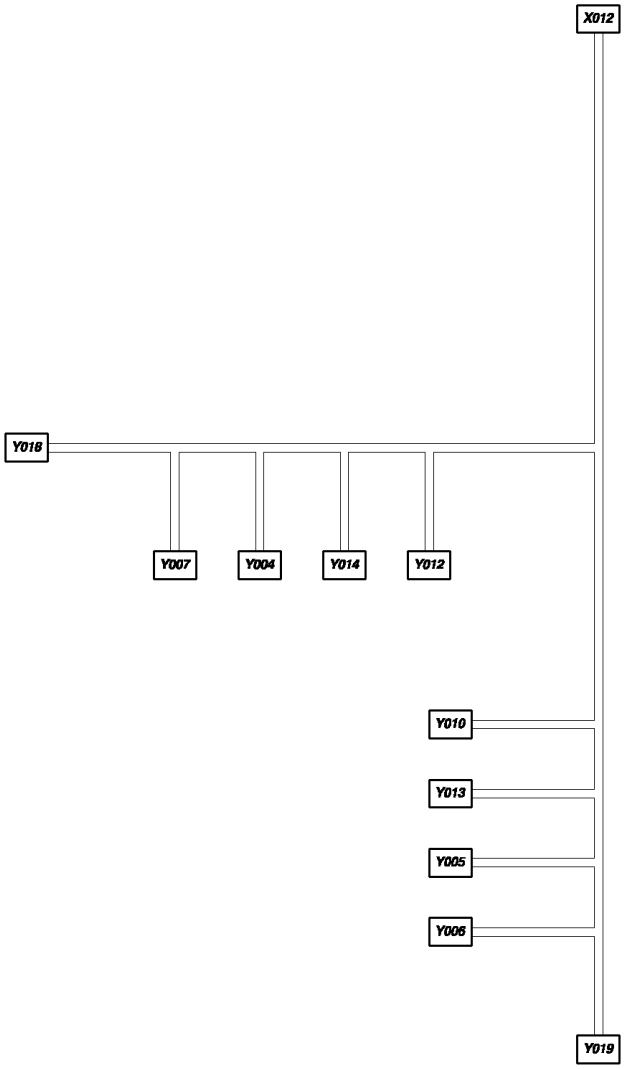

06.506(01) CABLE HARNESS : 84434104 - C375

ссылка	Номер детали	Кол-во	Описание
X01284400775			CONNECTOR, WIRE, X12
	84441874		CONNECTOR, WIRE,
	84068583		PLUG,
Y00484607243			CONNECTOR, WIRE, Y4
	84607213		CONNECTOR, WIRE,
	84607244		TERMINAL,
	84607242		SEAL,
Y00584607243			CONNECTOR, WIRE, Y5
	84607213		CONNECTOR, WIRE,
	84607244		TERMINAL,
	84607242		SEAL,
Y00684607243			CONNECTOR, WIRE, Y6
	84607213		CONNECTOR, WIRE,
	84607244		TERMINAL,
	84607242		SEAL,
Y00784607243			CONNECTOR, WIRE, Y7
	84607213		CONNECTOR, WIRE,
	84607244		TERMINAL,
	84607242		SEAL,
Y01084607243			CONNECTOR, WIRE, Y10
	84607213		CONNECTOR, WIRE,
	84607244		TERMINAL,
	84607242		SEAL,
Y01284607243			CONNECTOR, WIRE, Y12
	84607213		CONNECTOR, WIRE,
	84607244		TERMINAL,
	84607242		SEAL,
Y01384607243			CONNECTOR, WIRE, Y13
	84607213		CONNECTOR, WIRE,
	84607244		TERMINAL,
	84607242		SEAL,
Y01484607243			CONNECTOR, WIRE, Y14
	84607213		CONNECTOR, WIRE,
	84607244		TERMINAL,
	84607242		SEAL,
Y01884607243			CONNECTOR, WIRE, Y18
	84607213		CONNECTOR, WIRE,
	84607244		TERMINAL,
	84607242		SEAL,
Y01984607243			CONNECTOR, WIRE, Y19
	84607213		CONNECTOR, WIRE,
	84607244		TERMINAL,
	84607242		SEAL,

06.506(02) CABLE HARNESS : 84454108 - D376

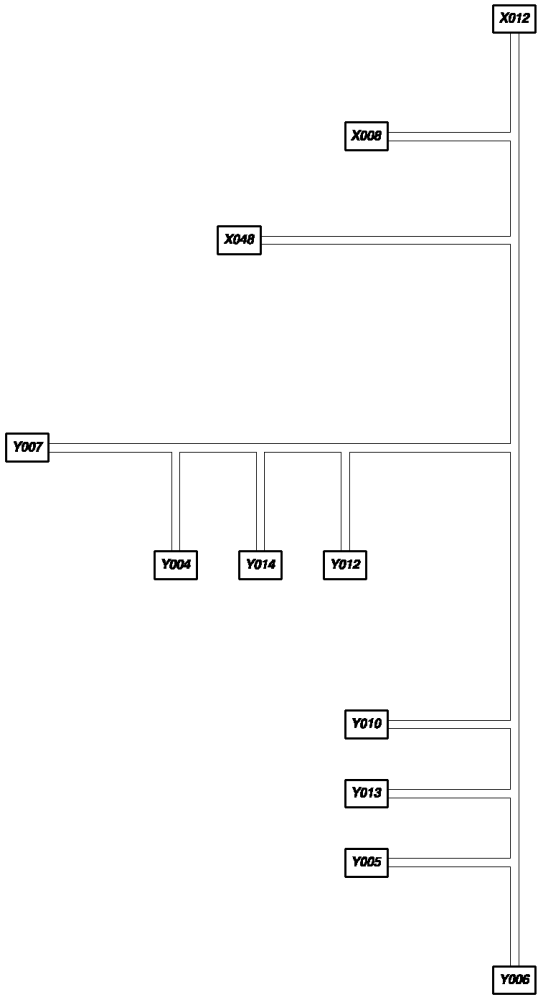

06.506(02) CABLE HARNESS : 84454108 - D376

ссылка	Номер детали	Кол-во	Описание
X00884074637			CONNECTOR, WIRE, X8
	86500036		PIN, ELECT TERMINAL,
	84074640		PLUG,
X01284400775			CONNECTOR, WIRE, X12
	84441874		CONNECTOR, WIRE,
	84068583		PLUG,
	86500035		TERMINAL,
	426199		TERMINAL, {PP:80426199}
X04884400771			CONNECTOR, WIRE, X48
	84441874		CONNECTOR, WIRE,
	86500036		PIN, ELECT TERMINAL,
Y00484607243			CONNECTOR, WIRE, Y4
	84607213		CONNECTOR, WIRE,
	84607244		TERMINAL,
	84607242		SEAL,
Y00584607243			CONNECTOR, WIRE, Y5
	84607213		CONNECTOR, WIRE,
	84607244		TERMINAL,
	84607242		SEAL,
Y00684607243			CONNECTOR, WIRE, Y6
	84607213		CONNECTOR, WIRE,
	84607244		TERMINAL,
	84607242		SEAL,
Y00784607243			CONNECTOR, WIRE, Y7
	84607213		CONNECTOR, WIRE,
	84607244		TERMINAL,
	84607242		SEAL,
Y01084607243			CONNECTOR, WIRE, Y10
	84607213		CONNECTOR, WIRE,
	84607244		TERMINAL,
	84607242		SEAL,
Y01284607243			CONNECTOR, WIRE, Y12
	84607213		CONNECTOR, WIRE,
	84607244		TERMINAL,
	84607242		SEAL,
Y01384607243			CONNECTOR, WIRE, Y13
	84607213		CONNECTOR, WIRE,
	84607244		TERMINAL,
	84607242		SEAL,
Y01484607243			CONNECTOR, WIRE, Y14
	84607213		CONNECTOR, WIRE,
	84607244		TERMINAL,
	84607242		SEAL,

06.507(01) CABLE HARNESS : 84434461 - C409

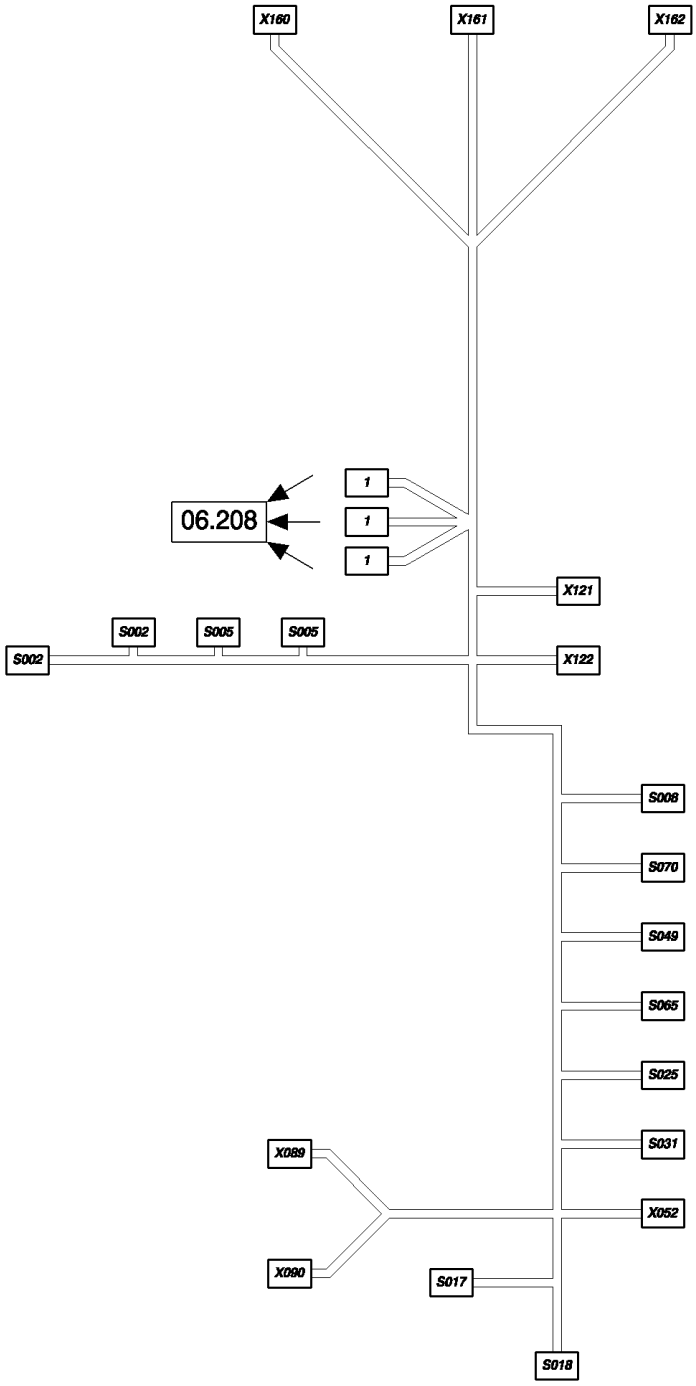

06.507(01) CABLE HARNESS : 84434461 - C409

ссылка	Номер детали	Кол-во	Описание
1	335483		TERMINAL, {PP:80335483}
	S002441159		CONNECTOR, WIRE, S2
	441166		TERMINAL, {PP:80441166}
	S005441159		CONNECTOR, WIRE, S5
	441166		TERMINAL, {PP:80441166}
	S00884607379		CONNECTOR, WIRE, S8
	334594		TERMINAL, {PP:80334594}
	334588		TERMINAL, {PP:80334588}
	S01784607379		CONNECTOR, WIRE, S17
	84053064		LABEL,
	334588		TERMINAL,
	S01884607379		CONNECTOR, WIRE, S18
	84053064		LABEL,
	334594		TERMINAL, {PP:80334594}
	334588		TERMINAL, {PP:80334588}
	S02584607379		CONNECTOR, WIRE, S25
	334594		TERMINAL, {PP:80334594}
	334588		TERMINAL, {PP:80334588}
	S03184607379		CONNECTOR, WIRE, S31
	334594		TERMINAL, {PP:80334594}
	334588		TERMINAL, {PP:80334588}
	S04984607379		CONNECTOR, WIRE, S49
	334594		TERMINAL, {PP:80334594}
	334588		TERMINAL, {PP:80334588}
	S06584607379		CONNECTOR, WIRE, S65
	334594		TERMINAL, {PP:80334594}
	334588		TERMINAL, {PP:80334588}
	S07084607379		CONNECTOR, WIRE, S70
	334588		TERMINAL, {PP:80334588}
	X05284818419		CONNECTOR, WIRE, X52
	442243		CONNECTOR, ELEC, {PP:80442243}
	X08984607372		CONNECTOR, WIRE, X89
	84607374		CONNECTOR, WIRE,
	X09084607372		CONNECTOR, WIRE, X90
	84607374		CONNECTOR, WIRE,
	X1219510666		CONNECTOR, WIRE, X121
	9815256		CONNECTOR, ELEC, {PP:89815256}
	9813989		TERMINAL, {PP:89813989}
	X1229815256		CONNECTOR, ELEC, X122
	9813989		TERMINAL, {PP:89813989}
	X16084814754		CONNECTOR, WIRE, X160
	84814765		ADAPTER,
	84814761		CABLE TERMINAL,
	X16184814756		CONNECTOR, WIRE, X161
	84814765		ADAPTER,

06.507(01) CABLE HARNESS : 84434461 - C409

ссылка	Номер детали	Кол-во	Описание
	84814761		CABLE TERMINAL,
	84814763		CABLE TERMINAL,
X162	84814755		CONNECTOR, WIRE, X162
	84814765		ADAPTER,
	84814761		CABLE TERMINAL,
	84814763		CABLE TERMINAL,

06.507(02) CABLE HARNESS : 84457856 - D410

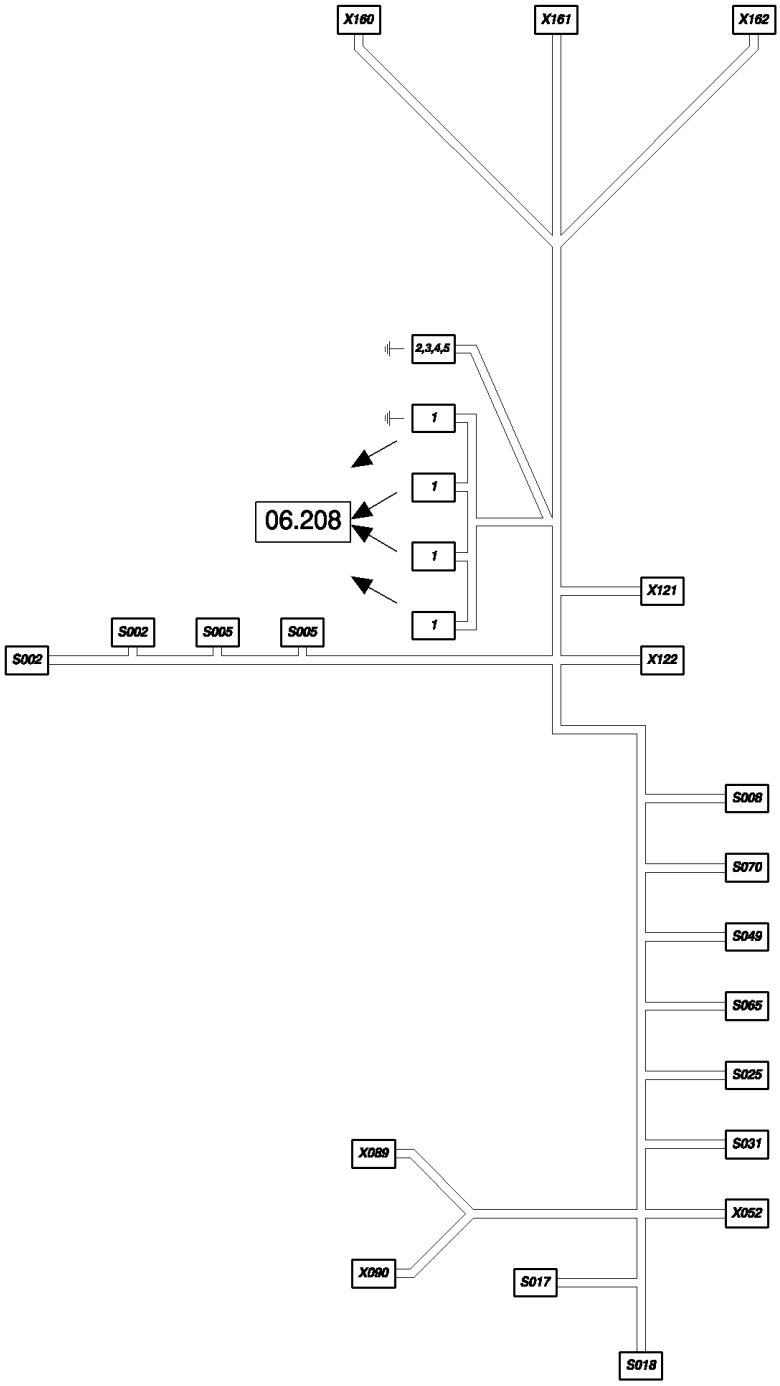

06.507(02) CABLE HARNESS : 84457856 - D410

ссылка	Номер детали	Кол-во	Описание
1	335483		TERMINAL, {PP:80335483}
2	84457868		CONNECTOR, WIRE,
3	84457870		PLUG, , BSN C479
3	87047058		, ASN D480
4	84457872		CABLE TERMINAL,
5	84457871		SEAL, , BSN C479
5	87047059		, ASN D480
S002441159			CONNECTOR, WIRE, S2
	441166		TERMINAL,
S005441159			CONNECTOR, WIRE, S5
	441166		TERMINAL,
S00884607379			CONNECTOR, WIRE, S8
	334594		TERMINAL,
	334588		TERMINAL,
S01784607379			CONNECTOR, WIRE, S17
	84053064		LABEL,
	334588		TERMINAL,
S01884607379			CONNECTOR, WIRE, S18
	84053064		LABEL,
	334594		TERMINAL,
	334588		TERMINAL,
S02584607379			CONNECTOR, WIRE, S25
	334594		TERMINAL,
	334588		TERMINAL,
	9815256		CONNECTOR, ELEC, , ASN D480
S03184607379			CONNECTOR, WIRE, S31
	334594		TERMINAL,
	334588		TERMINAL,
S04984607379			CONNECTOR, WIRE, S49
	334594		TERMINAL,
	334588		TERMINAL,
S06584607379			CONNECTOR, WIRE, S65
	334594		TERMINAL,
	334588		TERMINAL,
S07084607379			CONNECTOR, WIRE, S70
	334588		TERMINAL,
X05284818419			CONNECTOR, WIRE, X52
	442243		CONNECTOR, ELEC,
X08984607372			CONNECTOR, WIRE, X89
	84607374		CONNECTOR, WIRE,
X09084607372			CONNECTOR, WIRE, X90
	84607374		CONNECTOR, WIRE,
X1219510666			CONNECTOR, WIRE, X121
	9815256		CONNECTOR, ELEC,
	9813989		TERMINAL,

06.507(02) CABLE HARNESS : 84457856 - D410

ссылка	Номер детали	Кол-во	Описание
X1229815256			CONNECTOR, ELEC, X122, BSN C479
9510666			CONNECTOR, WIRE, , ASN D480
9813989			TERMINAL,
9815256			CONNECTOR, ELEC, , ASN D480
X16084400776			CONNECTOR, WIRE, X160
84441874			CONNECTOR, WIRE,
86500035			TERMINAL,
X16184400775			CONNECTOR, WIRE, X161
84441874			CONNECTOR, WIRE,
84074628			CABLE TERMINAL, , BSN C479
86500035			TERMINAL,
X16284400771			CONNECTOR, WIRE, X162
84441874			CONNECTOR, WIRE,
84068583			PLUG,
84074628			CABLE TERMINAL,
86500035			TERMINAL,

06.508(01) CABLE HARNESS : 84435223 - C363

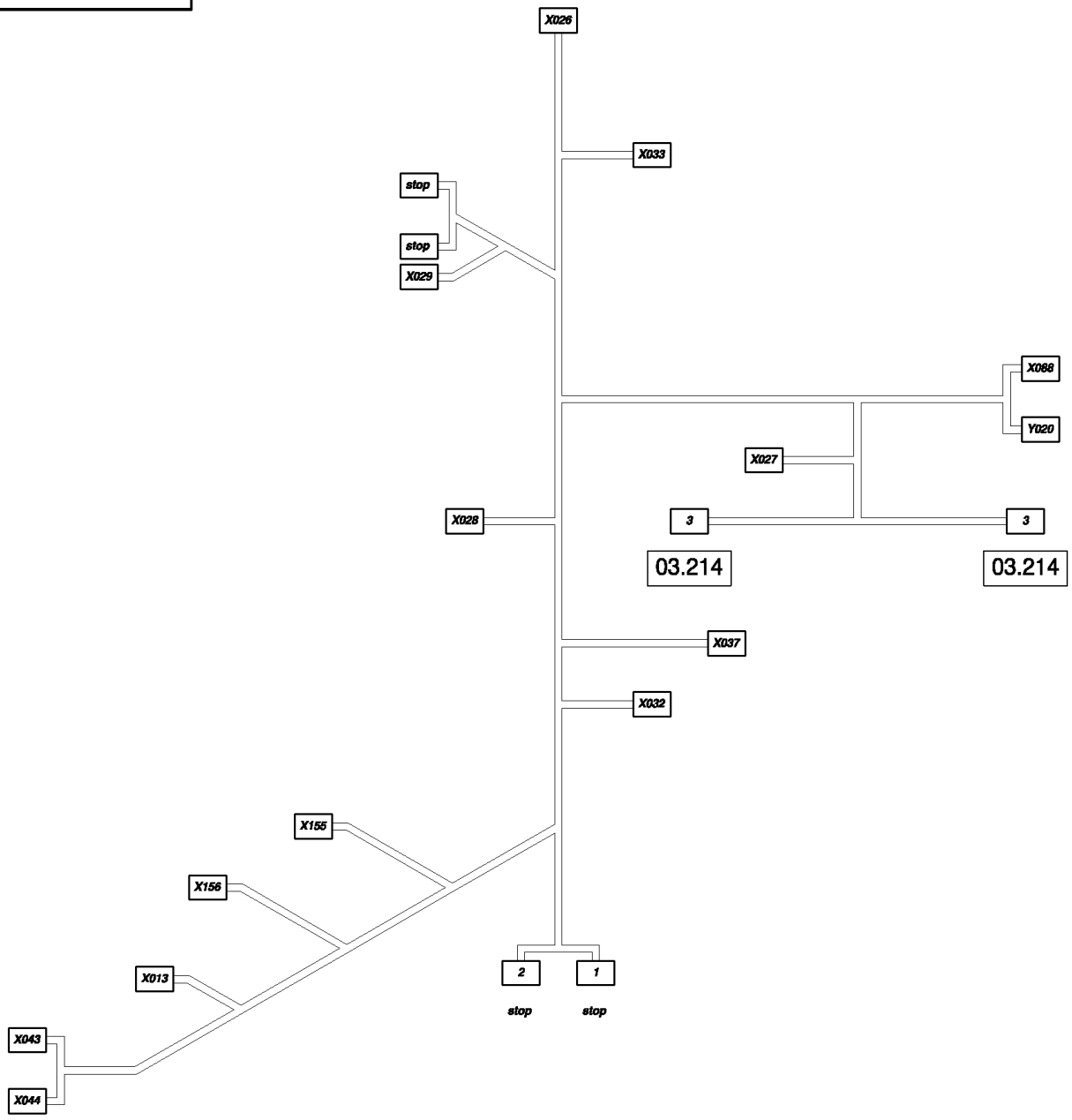

06.508(01) CABLE HARNESS : 84435223 - C363

ссылка	Номер детали	Кол-во	Описание
1	84607920		
2	84607921		HOSE,
3	84004134		TERMINAL,
X01384074631			CONNECTOR, WIRE, X13
	84068583		PLUG,
	86500036		PIN, ELECT TERMINAL,
	84074638		PLUG,
X02684400776			CONNECTOR, WIRE, X26
	84441874		CONNECTOR, WIRE,
	86500035		TERMINAL,
X02784074631			CONNECTOR, WIRE, X27
	86500036		PIN, ELECT TERMINAL,
	84074638		PLUG,
X02884074631			CONNECTOR, WIRE, X28
	86500036		PIN, ELECT TERMINAL,
	84074638		PLUG,
X02984074631			CONNECTOR, WIRE, X29
	86500036		PIN, ELECT TERMINAL,
	84074638		PLUG,
X03284074631			CONNECTOR, WIRE, X32
	86500036		PIN, ELECT TERMINAL,
	84074638		PLUG,
X03384074631			CONNECTOR, WIRE, X33
	86500036		PIN, ELECT TERMINAL,
	84074638		PLUG,
X03784074631			CONNECTOR, WIRE, X37
	86500036		PIN, ELECT TERMINAL,
	84074638		PLUG,
X04384400439			CONNECTOR, WIRE, X43
	84400440		CONNECTOR, WIRE,
	80446236		CABLE TERMINAL,
	84400441		PLUG,
X04484400439			CONNECTOR, WIRE, X44
	84400440		CONNECTOR, WIRE,
	80446236		CABLE TERMINAL,
	84400441		PLUG,
X08884078681			CONNECTOR, WIRE, X88
	84078682		TERMINAL,
X15584074643			CONNECTOR, WIRE, X155
	86500036		PIN, ELECT TERMINAL,
	84074641		PLUG,
X15684074635			CONNECTOR, WIRE, X156
	86500036		PIN, ELECT TERMINAL,
	84074639		CONNECTOR, WIRE,
Y02084019407			CONNECTOR, HYD., Y20

06.508(01) CABLE HARNESS : 84435223 - C363

ссылка	Номер детали	Кол-во	Описание
	426199		TERMINAL, {PP:80426199}

06.511(01) CABLE HARNESS : 84435760

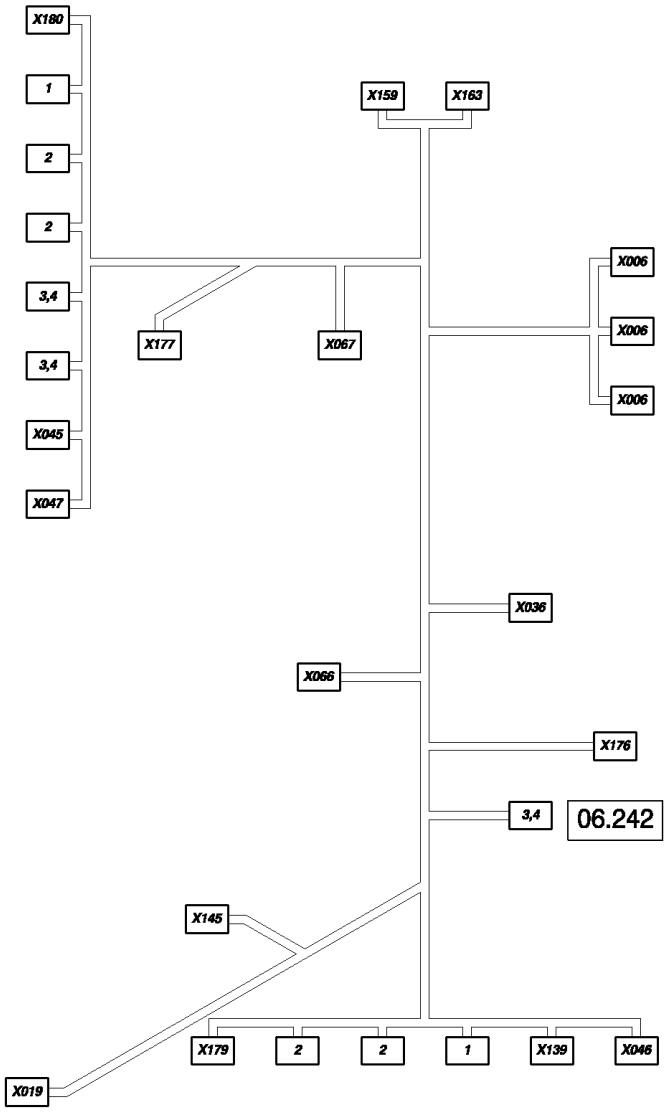

06.511(01) CABLE HARNESS : 84435760

ссылка	Номер детали	Кол-во	Описание
1	335482		TERMINAL, {PP:80335482}
2	335483		TERMINAL, {PP:80335483}
3	441159		CONNECTOR, WIRE, {PP:80441159}
4	441166		TERMINAL, {PP:80441166}
S052441159			CONNECTOR, WIRE, S52
	441166		TERMINAL, {PP:80441166}
	441159		CONNECTOR, WIRE, {PP:80441159}
X00686611284			CONNECTOR, WIRE, X6
	84441696		CONNECTOR, WIRE,
	84100538		CONNECTOR, WIRE,
X01984320884			CONNECTOR, WIRE, X19
	84068583		PLUG,
	86500036		PIN, ELECT TERMINAL,
X03684074643			CONNECTOR, WIRE, X36
	86500036		PIN, ELECT TERMINAL,
	84074641		PLUG,
X04584806311			CONNECTOR, WIRE, X45
	84806208		CONNECTOR, WIRE,
	84068583		PLUG,
	86500036		PIN, ELECT TERMINAL,
X04684074632			CONNECTOR, WIRE, X46
	86500035		TERMINAL,
	9611173		PLUG, {PP:89611173}
X04784074632			CONNECTOR, WIRE, X47
	86500035		TERMINAL,
	86500036		PIN, ELECT TERMINAL,
	9611173		PLUG,
X06684074635			CONNECTOR, WIRE, X66
	86500036		PIN, ELECT TERMINAL,
	84074639		CONNECTOR, WIRE,
X06784074635			CONNECTOR, WIRE, X67
	86500036		PIN, ELECT TERMINAL,
	84074639		CONNECTOR, WIRE,
X13984806311			CONNECTOR, WIRE, X139
	84806208		CONNECTOR, WIRE,
	84068583		PLUG,
	86500036		PIN, ELECT TERMINAL,
	84806312		CONNECTOR, WIRE,
X14584074630			CONNECTOR, WIRE, X145
	86500035		TERMINAL,
	86500166		PLUG,
X15984400773			CONNECTOR, WIRE, X159
	84441874		CONNECTOR, WIRE,
	84068583		PLUG,
	86500035		TERMINAL,

06.511(01) CABLE HARNESS : 84435760

ссылка	Номер детали	Кол-во	Описание
	84074628		CABLE TERMINAL,
X16384400776			CONNECTOR, WIRE, X163
	84441874		CONNECTOR, WIRE,
	84068583		PLUG,
	86500035		TERMINAL,
X17684074631			CONNECTOR, WIRE, X176
	86500036		PIN, ELECT TERMINAL,
	84074638		PLUG,
X17784074631			CONNECTOR, WIRE, X177
	86500036		PIN, ELECT TERMINAL,
	84074638		PLUG,
X17984074637			CONNECTOR, WIRE, X179
	84068583		PLUG,
	86500036		PIN, ELECT TERMINAL,
	84074640		PLUG,
X18084074643			CONNECTOR, WIRE, X180
	84068583		PLUG,
	86500036		PIN, ELECT TERMINAL,
	84074641		PLUG,

06.512(01) CABLE HARNESS : 84435876 - C375

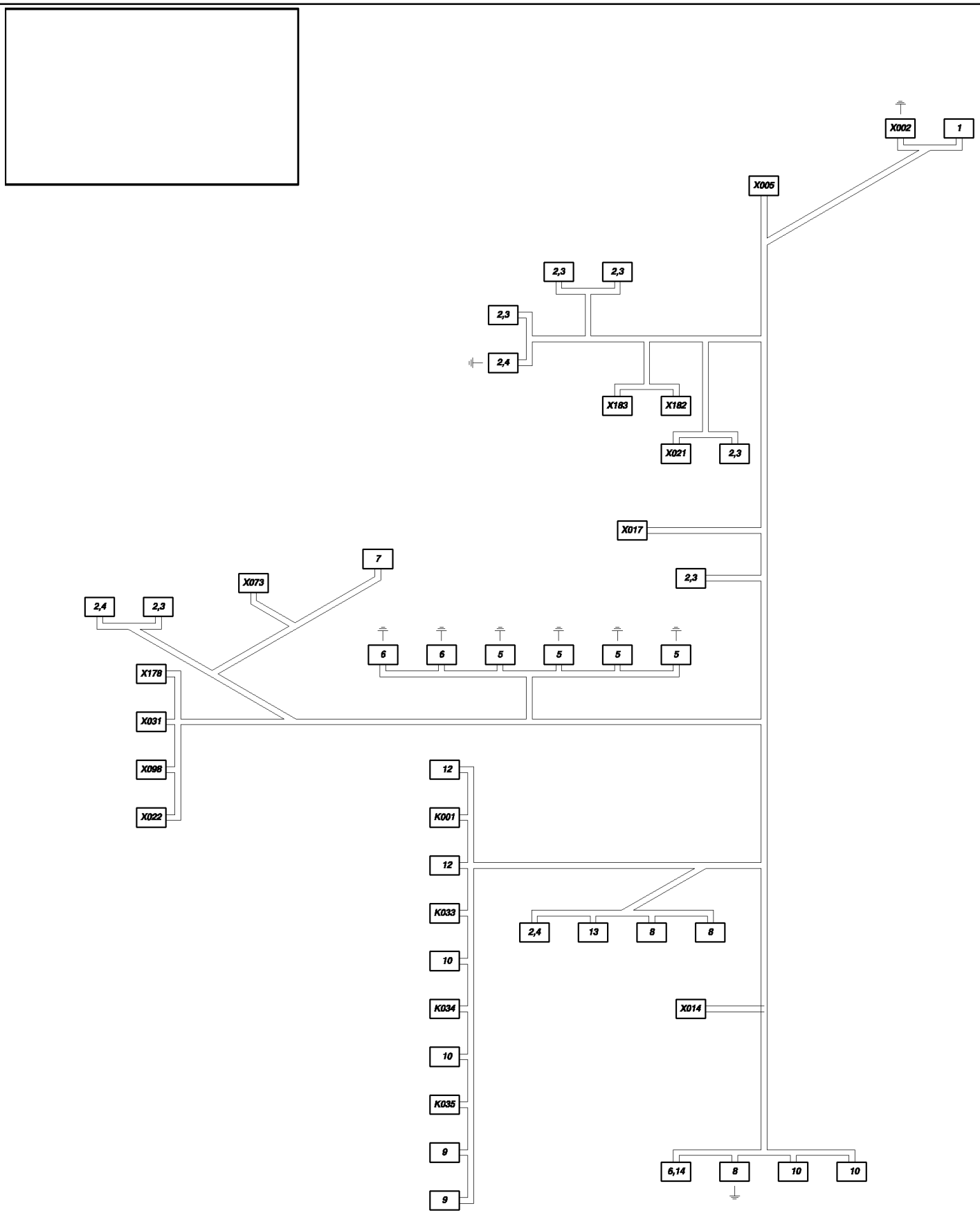

06.512(01) CABLE HARNESS : 84435876 - C375

ссылка	Номер детали	Кол-во	Описание
1	455780		TERMINAL, {PP:80455780}
2	441159		CONNECTOR, WIRE, {PP:80441159}
3	441166		TERMINAL, {PP:80441166}
4	441167		TERMINAL, {PP:80441167}
5	80919749		CABLE TERMINAL,
6	80916171		CABLE TERMINAL,
7	80357472		TERMINAL,
8	80444851		TERMINAL,
9	80444853		CABLE TERMINAL,
10	334787		CONNECTOR, HYD., {PP:80334787}
11	334588		TERMINAL, {PP:80334588}
12	80334591		TERMINAL,
13	335482		TERMINAL, {PP:80335482}
14	84038072		CABLE,
K001439588			SUPPORT, K1
	334588		TERMINAL, {PP:80334588}
K033439588			SUPPORT, K33
	334588		TERMINAL, {PP:80334588}
	334594		TERMINAL, {PP:80334594}
K034439588			SUPPORT, K34
	334588		TERMINAL, {PP:80334588}
	334594		TERMINAL, {PP:80334594}
K035439588			SUPPORT, K35
	334588		TERMINAL, {PP:80334588}
	334594		TERMINAL, {PP:80334594}
X00284806654			CONNECTOR, WIRE, X2
	84814863		CONNECTOR, WIRE,
	84814862		CONNECTOR, WIRE,
	84806656		CABLE TERMINAL,
X00584400776			CONNECTOR, WIRE, X5
	84441874		CONNECTOR, WIRE,
	86500035		TERMINAL,
X01484000181			TERMINAL, X14
	84004256		CLAMP,
	84004255		SEAL,
	84000182		TERMINAL,
X01780445745			CONNECTOR, WIRE, X17
	80445526		COLLAR,
	445518		TERMINAL, {PP:80445518}
X02184074631			CONNECTOR, WIRE, X21
	86500036		PIN, ELECT TERMINAL,
	84074638		PLUG,
X02284074637			CONNECTOR, WIRE, X22
	86500036		PIN, ELECT TERMINAL,
	84074640		PLUG,

06.512(01) CABLE HARNESS : 84435876 - C375

ссылка	Номер детали	Кол-во	Описание
X03184074630			CONNECTOR, WIRE, X31
	86500035		TERMINAL,
	86500166		PLUG,
X07384074631			CONNECTOR, WIRE, X73
	86500036		PIN, ELECT TERMINAL,
	84074638		PLUG,
X09884074636			CONNECTOR, WIRE, X98
	86500035		TERMINAL,
	9861376		CONNECTOR, WIRE, {PP:89861376}
X17884074631			CONNECTOR, WIRE, X178
	86500036		PIN, ELECT TERMINAL,
	84074638		PLUG,
X18284074635			CONNECTOR, WIRE, X182
	84058188		CONNECTOR, WIRE,
	86500036		PIN, ELECT TERMINAL,
	84058194		PLUG,
X18386611284			CONNECTOR, WIRE, X183
	84441696		CONNECTOR, WIRE,
	84100538		CONNECTOR, WIRE,

06.512(02) CABLE HARNESS : 84454070 - F376479

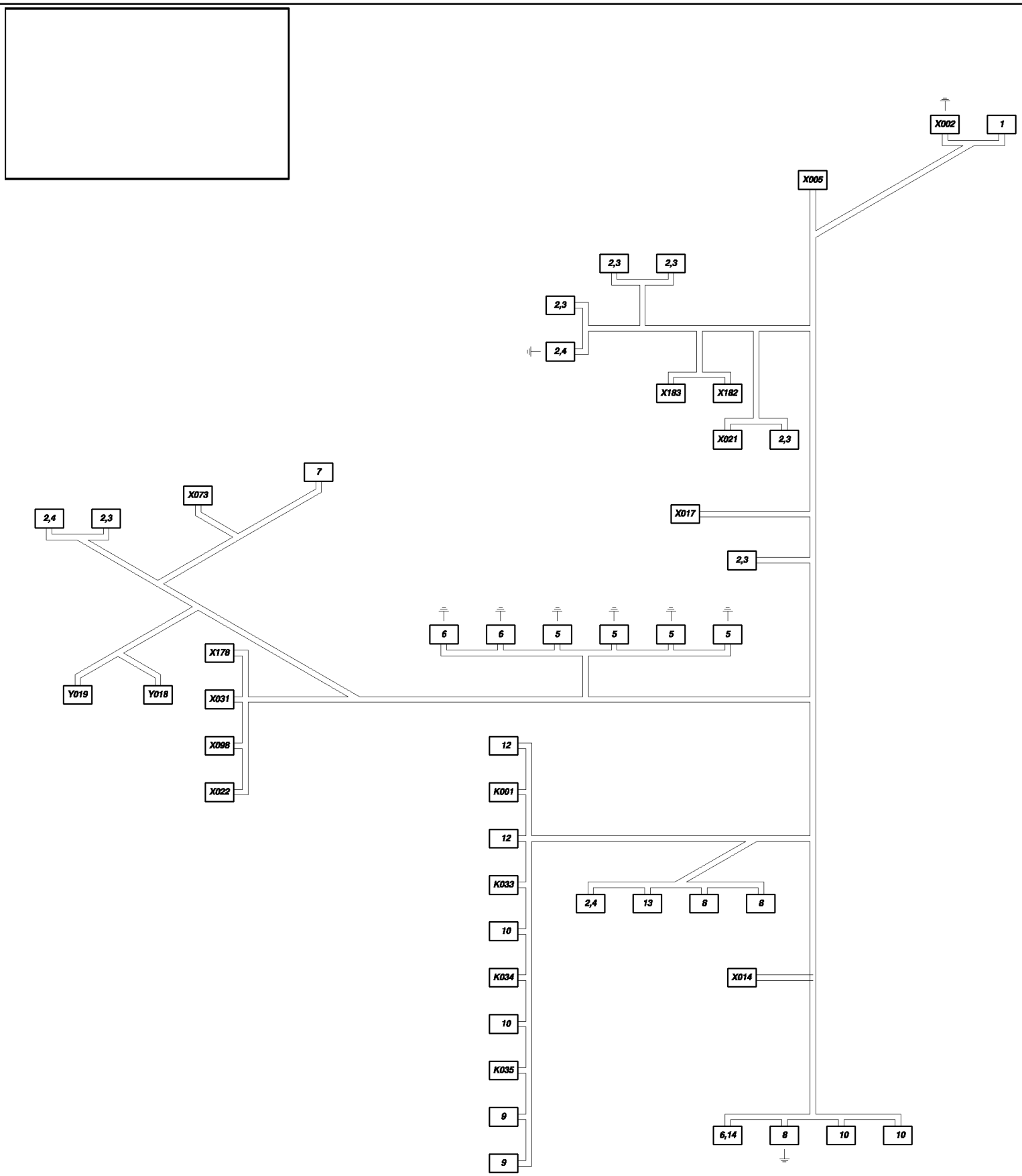

06.512(02) CABLE HARNESS : 84454070 - F376479

ссылка	Номер детали	Кол-во	Описание
1	455780		TERMINAL, {PP:80455780}
2	441159		CONNECTOR, WIRE, {PP:80441159}
3	441166		TERMINAL, {PP:80441166}
4	441167		TERMINAL, {PP:80441167}
5	80919749		CABLE TERMINAL,
6	80916171		CABLE TERMINAL,
7	80357472		TERMINAL,
8	80444851		TERMINAL,
9	80444853		CABLE TERMINAL,
10	334787		CONNECTOR, HYD., {PP:80334787}
11	334588		TERMINAL, {PP:80334588}
12	80334591		TERMINAL,
13	334788		CONNECTOR, HYD., {PP:80334788}
14	84038072		CABLE,
K001439588			SUPPORT, K1
	334588		TERMINAL, {PP:80334588}
K033439588			SUPPORT, K33
	334588		TERMINAL, {PP:80334588}
	334594		TERMINAL, {PP:80334594}
K034439588			SUPPORT, K34
	334588		TERMINAL, {PP:80334588}
	334594		TERMINAL, {PP:80334594}
K035439588			SUPPORT, K35
	334588		TERMINAL, {PP:80334588}
	334594		TERMINAL, {PP:80334594}
X00284806654			CONNECTOR, WIRE, X2
	84814863		CONNECTOR, WIRE,
	84814862		CONNECTOR, WIRE,
	84806656		CABLE TERMINAL,
X00584400776			CONNECTOR, WIRE, X5
	84441874		CONNECTOR, WIRE,
	86500035		TERMINAL,
X01484000181			TERMINAL, X14
	84004256		CLAMP,
	84004255		SEAL,
	84000182		TERMINAL,
X01780445745			CONNECTOR, WIRE, X17
	80445526		COLLAR, , BSN C423
	80447555		CONNECTOR, HYD., , ASN D424
	445518		TERMINAL,
X02184074631			CONNECTOR, WIRE, X21
	86500036		PIN, ELECT TERMINAL,
	84074638		PLUG,
X02284074637			CONNECTOR, WIRE, X22
	86500036		PIN, ELECT TERMINAL,

06.512(02) CABLE HARNESS : 84454070 - F376479

сылка	Номер детали	Кол-во	Описание
	84074640		PLUG,
	X03184074630		CONNECTOR, WIRE, X31
	86500035		TERMINAL,
	86500166		PLUG,
	X07384074631		CONNECTOR, WIRE, X73
	86500036		PIN, ELECT TERMINAL,
	84074638		PLUG,
	X09884074636		CONNECTOR, WIRE, X98
	86500035		TERMINAL,
	9861376		CONNECTOR, WIRE,
	X17884074631		CONNECTOR, WIRE, X178
	86500036		PIN, ELECT TERMINAL,
	84074638		PLUG,
	X18284074635		CONNECTOR, WIRE, X182
	84058188		CONNECTOR, WIRE,
	86500036		PIN, ELECT TERMINAL,
	84058194		PLUG,
	X18386611284		CONNECTOR, WIRE, X183
	84441696		CONNECTOR, WIRE,
	84100538		CONNECTOR, WIRE,
	Y01884607243		CONNECTOR, WIRE, Y18
	84607213		CONNECTOR, WIRE,
	84607244		TERMINAL,
	84607242		SEAL,
	Y01984607243		CONNECTOR, WIRE, Y19
	84607213		CONNECTOR, WIRE,
	84607244		TERMINAL,
	84607242		SEAL,

06.512(03) CABLE HARNESS : 84462146 - D480

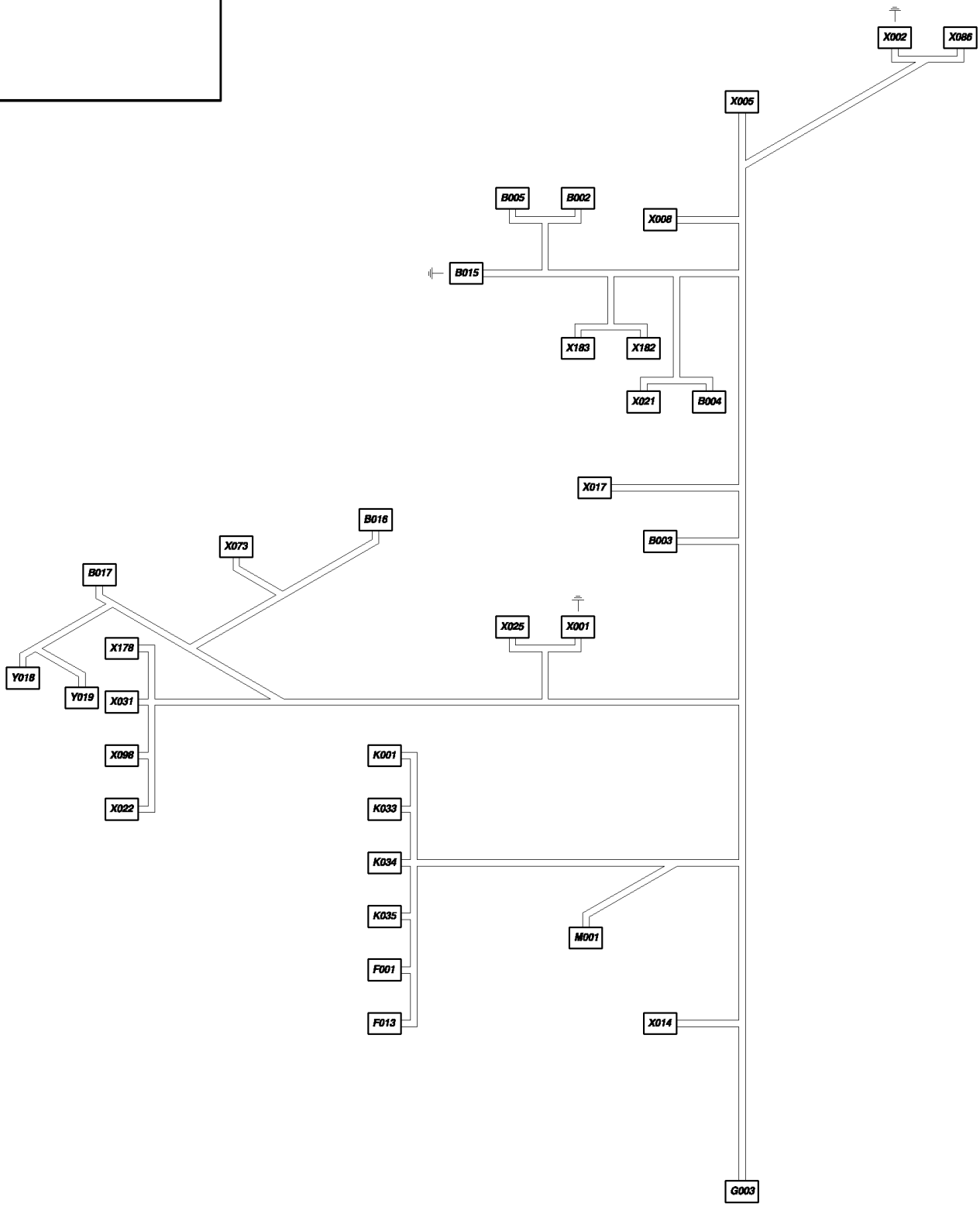

06.512(03) CABLE HARNESS : 84462146 - D480

ссылка	Номер детали	Кол-во	Описание
	B002441166		TERMINAL, B2
	441159		CONNECTOR, WIRE,
	B003441166		TERMINAL, B3
	441159		CONNECTOR, WIRE,
	B004441166		TERMINAL, B4
	441159		CONNECTOR, WIRE,
	B005441166		TERMINAL, B5
	441159		CONNECTOR, WIRE,
	B015441166		TERMINAL, B15
	441159		CONNECTOR, WIRE,
	B01680357472		TERMINAL, B16
	B017441166		TERMINAL, B17
	441167		TERMINAL,
	441159		CONNECTOR, WIRE,
	F00180444853		CABLE TERMINAL, F1
	80334591		TERMINAL,
	F013334787		CONNECTOR, HYD., F13
	80334591		TERMINAL,
	G00380444851		TERMINAL, G3
	334787		CONNECTOR, HYD.,
	916171		LEVER,
	84038072		CABLE,
	K001439588		SUPPORT, K1
	334588		TERMINAL,
	K033439588		SUPPORT, K33
	334588		TERMINAL,
	K034439588		SUPPORT, K34
	334588		TERMINAL,
	334594		TERMINAL,
	K035439588		SUPPORT, K35
	334588		TERMINAL,
	M00180444851		TERMINAL, M1
	334788		CONNECTOR, HYD.,
	441167		TERMINAL,
	441159		CONNECTOR, WIRE,
	X00180919749		CABLE TERMINAL, X1
	916171		LEVER,
	X002455780		TERMINAL, X2
	84461827		
	X00584400776		CONNECTOR, WIRE, X5
	84441874		CONNECTOR, WIRE,
	86500035		TERMINAL,
	X00884074636		CONNECTOR, WIRE, X8
	9861376		CONNECTOR, WIRE,
	86500035		TERMINAL,

06.512(03) CABLE HARNESS : 84462146 - D480

ссылка	Номер детали	Кол-во	Описание
X01484000181			TERMINAL, X14
	84004256		CLAMP,
	84004255		SEAL,
	84000182		TERMINAL,
X01780445745			CONNECTOR, WIRE, X17
	447555		CONNECTOR, HYD.,
	445518		TERMINAL,
X02184074631			CONNECTOR, WIRE, X21
	84074638		PLUG,
	86500036		PIN, ELECT TERMINAL,
X02284074637			CONNECTOR, WIRE, X22
	84074640		PLUG,
	86500036		PIN, ELECT TERMINAL,
X02584074631			CONNECTOR, WIRE, X25
	84074638		PLUG,
	86500036		PIN, ELECT TERMINAL,
	84068583		PLUG,
X03184074630			CONNECTOR, WIRE, X31
	86500166		PLUG,
	86500035		TERMINAL,
X07384074631			CONNECTOR, WIRE, X73
	84074638		PLUG,
	86500036		PIN, ELECT TERMINAL,
X086455780			TERMINAL, X86
X09884074636			CONNECTOR, WIRE, X98
	9861376		CONNECTOR, WIRE,
	86500035		TERMINAL,
X17884074631			CONNECTOR, WIRE, X178
	84074638		PLUG,
	86500036		PIN, ELECT TERMINAL,
X18284074635			CONNECTOR, WIRE, X182
	84058194		PLUG,
	84058188		CONNECTOR, WIRE,
	86500036		PIN, ELECT TERMINAL,
X18386611284			CONNECTOR, WIRE, X183
	84441696		CONNECTOR, WIRE,
	84100538		CONNECTOR, WIRE,
Y01884607213			CONNECTOR, WIRE, Y18
	84607243		CONNECTOR, WIRE,
	84607244		TERMINAL,
	84607242		SEAL,
Y01984607213			CONNECTOR, WIRE, Y19
	84607243		CONNECTOR, WIRE,
	84607244		TERMINAL,
	84607242		SEAL,

06.513(01) CABLE HARNESS : 84437082 - C363

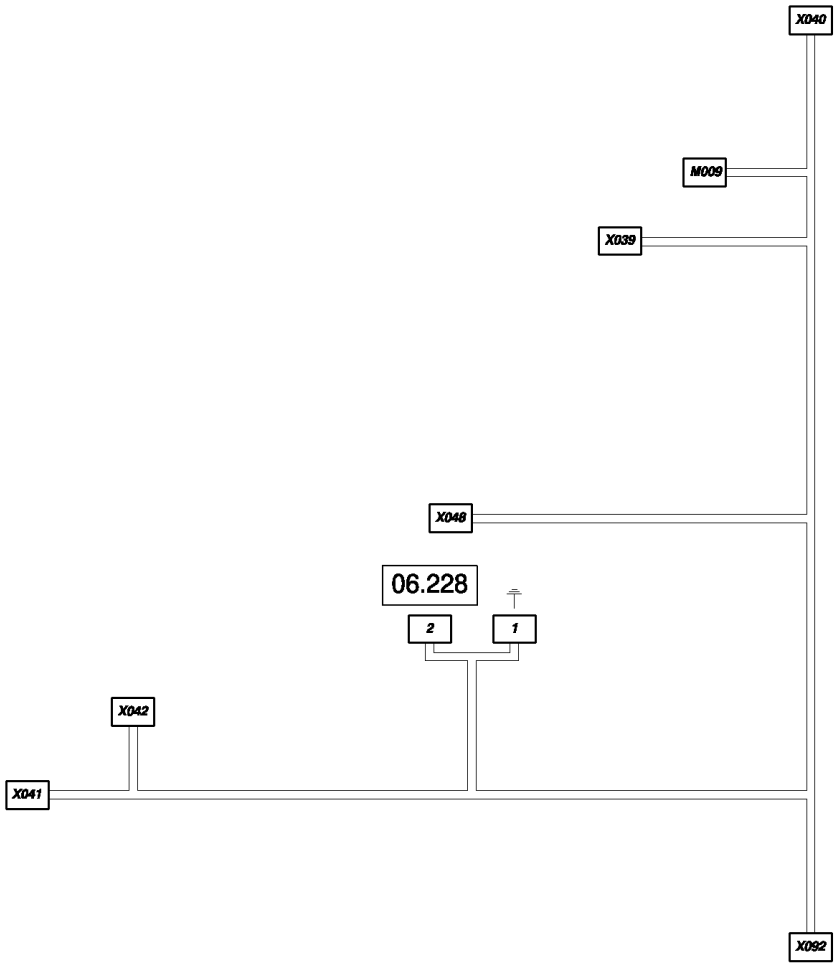

06.513(01) CABLE HARNESS : 84437082 - C363

ссылка	Номер детали	Кол-во	Описание
1	334787		CONNECTOR, HYD., {PP:80334787}
2	426199		TERMINAL, {PP:80426199}
M009	441166		TERMINAL, M9
	441167		TERMINAL, {PP:80441167}
	441159		CONNECTOR, WIRE, {PP:80441159}
X039	84806091		CONNECTOR, WIRE, X39
	84806090		CONNECTOR, WIRE,
	84607244		TERMINAL,
	84607242		SEAL,
X040	84400773		CONNECTOR, WIRE, X40
	84441874		CONNECTOR, WIRE,
	84068583		PLUG,
	86500035		TERMINAL,
X041	84074631		CONNECTOR, WIRE, X41
	86500036		PIN, ELECT TERMINAL,
	84074638		PLUG,
X042	84074630		CONNECTOR, WIRE, X42
	86500035		TERMINAL,
	86500166		PLUG,
X048	84400771		CONNECTOR, WIRE, X48
	84441874		CONNECTOR, WIRE,
	84068583		PLUG,
	86500035		TERMINAL,
X092	84074635		CONNECTOR, WIRE, X92
	86500036		PIN, ELECT TERMINAL,
	84074639		CONNECTOR, WIRE,

06.514(01) CABLE HARNESS : 84437086 - C363

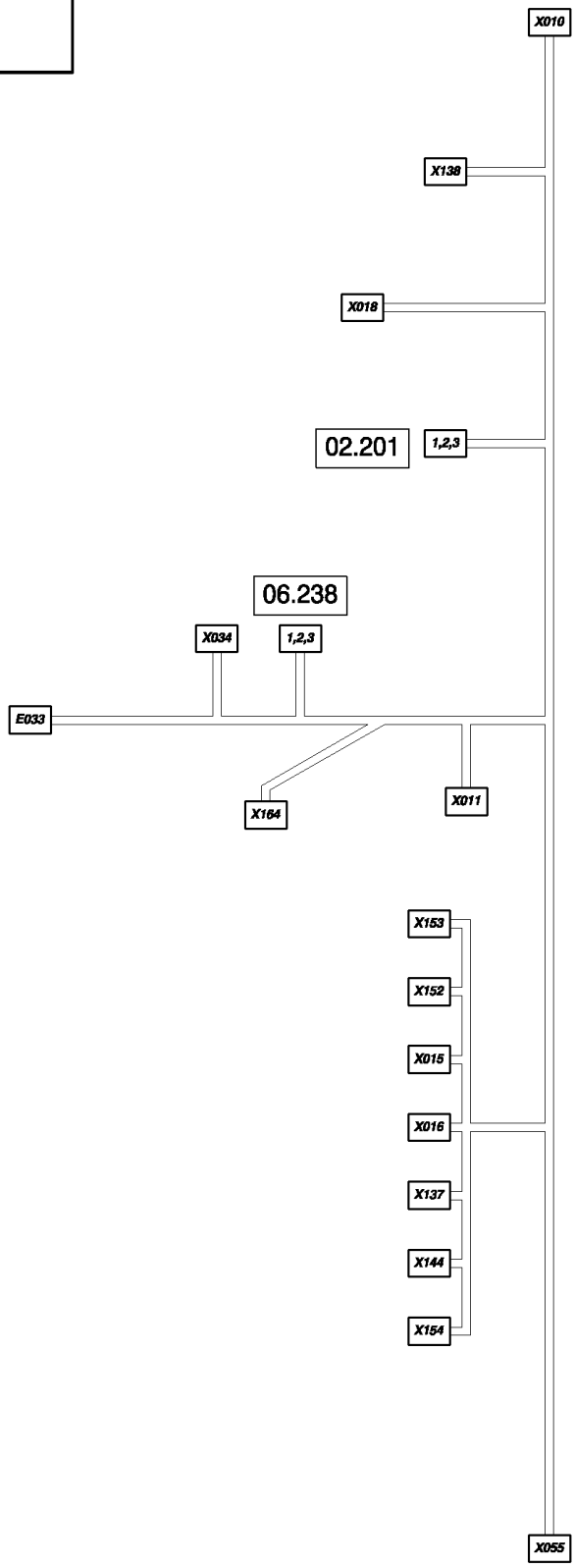

06.514(01) CABLE HARNESS : 84437086 - C363

ссылка	Номер детали	Кол-во	Описание
1	441166		TERMINAL, {PP:80441166}
2	441167		TERMINAL, {PP:80441167}
3	441159		CONNECTOR, WIRE, {PP:80441159}
	E033430026		TERMINAL, E33
	X01084807217		CONNECTOR, WIRE, X10
	84441874		CONNECTOR, WIRE,
	84807680		TAB, LOCKING,
	86500035		TERMINAL,
	84074628		CABLE TERMINAL,
	X01184074631		CONNECTOR, WIRE, X11
	86500036		PIN, ELECT TERMINAL,
	84074638		PLUG,
	X01584806311		CONNECTOR, WIRE, X15
	84806208		CONNECTOR, WIRE,
	86500036		PIN, ELECT TERMINAL,
	84806312		CONNECTOR, WIRE,
	X01684806311		CONNECTOR, WIRE, X16
	84806208		CONNECTOR, WIRE,
	86500036		PIN, ELECT TERMINAL,
	84806312		CONNECTOR, WIRE,
	X01884806457		CONNECTOR, WIRE, X18
	84806460		CABLE TERMINAL,
	84100538		CONNECTOR, WIRE,
	84806458		CONNECTOR, WIRE,
	X03484074635		CONNECTOR, WIRE, X34
	86500036		PIN, ELECT TERMINAL,
	84074639		CONNECTOR, WIRE,
	X05584074631		CONNECTOR, WIRE, X55
	86500036		PIN, ELECT TERMINAL,
	84074638		PLUG,
	X065441159		CONNECTOR, WIRE, X65
	441166		TERMINAL, {PP:80441166}
	441167		TERMINAL, {PP:80441167}
	X13784806311		CONNECTOR, WIRE, X137
	84806208		CONNECTOR, WIRE,
	86500036		PIN, ELECT TERMINAL,
	84806312		CONNECTOR, WIRE,
	X13884074631		CONNECTOR, WIRE, X138
	86500036		PIN, ELECT TERMINAL,
	84074638		PLUG,
	X14484806311		CONNECTOR, WIRE, X144
	84806208		CONNECTOR, WIRE,
	86500036		PIN, ELECT TERMINAL,
	84806312		CONNECTOR, WIRE,
	X15284074631		CONNECTOR, WIRE, X152

06.514(01) CABLE HARNESS : 84437086 - C363

ссылка	Номер детали	Кол-во	Описание
	86500036		PIN, ELECT TERMINAL,
	84074638		PLUG,
X15384074631			CONNECTOR, WIRE, X153
	86500036		PIN, ELECT TERMINAL,
	84074638		PLUG,
X15484806311			CONNECTOR, WIRE, X154
	84806208		CONNECTOR, WIRE,
	86500036		PIN, ELECT TERMINAL,
	84806312		CONNECTOR, WIRE,
X16484074631			CONNECTOR, WIRE, X164
	86500036		PIN, ELECT TERMINAL,
	84074638		PLUG,

06.516(01) CABLE HARNESS : 84437169

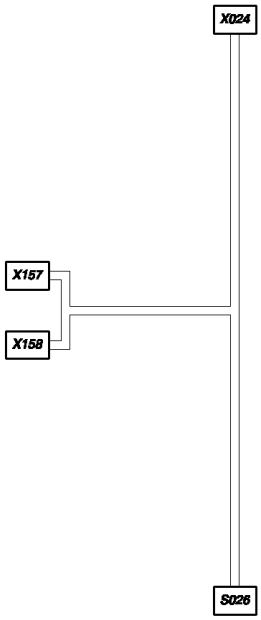

06.516(01) CABLE HARNESS : 84437169

ссылка	Номер детали	Кол-во	Описание
	S02684817101		CONNECTOR, WIRE, S26
	84817103		CABLE TERMINAL,
	84817102		TAB, LOCKING,
	X02484400771		CONNECTOR, WIRE, X24
	84441874		CONNECTOR, WIRE,
	84068583		PLUG,
	86500035		TERMINAL,
	84074628		CABLE TERMINAL,
	X15784015523		CONNECTOR, ELEC, X157
	334588		TERMINAL, {PP:80334588}
	X1589510662		CONNECTOR, WIRE, X158
	445522		TERMINAL, {PP:80445522}

06.517(01) CABLE HARNESS : 84437176

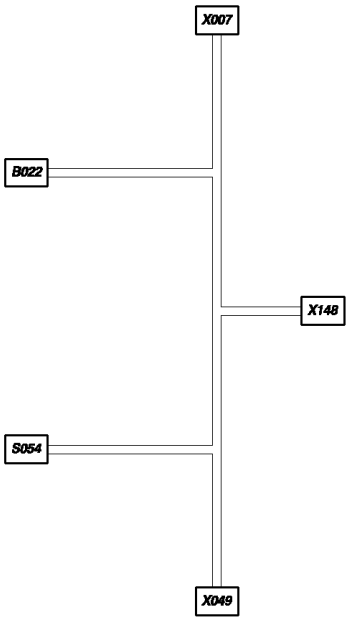

06.517(01) CABLE HARNESS : 84437176

ссылка	Номер детали	Кол-во	Описание
B022441159			CONNECTOR, WIRE, B22
	441166		TERMINAL, {PP:80441166}
S05484607379			CONNECTOR, WIRE, S54
	334588		TERMINAL, {PP:80334588}
X00784400775			CONNECTOR, WIRE, X7
	84441874		CONNECTOR, WIRE,
	84068583		PLUG,
	86500035		TERMINAL,
X04984439476			CONNECTOR, WIRE, X49
	84439475		CONNECTOR, WIRE,
X1489509740			CONNECTOR, ELEC, X148
	442243		CONNECTOR, ELEC, {PP:80442243}

06.518(01) CABLE HARNESS : 84437197

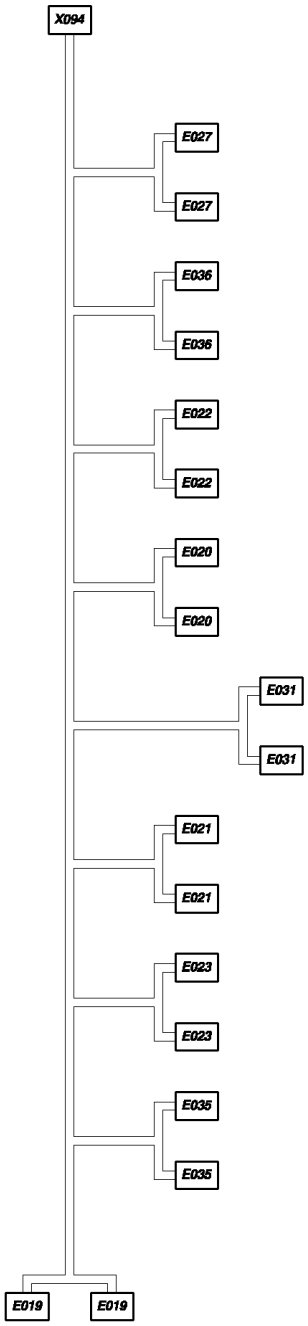

06.518(01) CABLE HARNESS : 84437197

ссылка	Номер детали	Кол-во	Описание
E019	441159		CONNECTOR, WIRE, E19
	441166		TERMINAL, {PP:80441166}
E020	441159		CONNECTOR, WIRE, E20
	441166		TERMINAL, {PP:80441166}
E021	441159		CONNECTOR, WIRE, E21
	441166		TERMINAL, {PP:80441166}
E022	441159		CONNECTOR, WIRE, E22
	441166		TERMINAL, {PP:80441166}
E023	441159		CONNECTOR, WIRE, E23
	441166		TERMINAL, {PP:80441166}
E027	441159		CONNECTOR, WIRE, E27
	441166		TERMINAL, {PP:80441166}
E031	441159		CONNECTOR, WIRE, E31
	441166		TERMINAL, {PP:80441166}
E035	441159		CONNECTOR, WIRE, E35
	441166		TERMINAL, {PP:80441166}
E036	441159		CONNECTOR, WIRE, E36
	441166		TERMINAL, {PP:80441166}
X09	484400780		CONNECTOR, WIRE, X94
	84068583		PLUG,
	86500036		PIN, ELECT TERMINAL,

06.519(01) CABLE HARNESS : 84437237 - C375

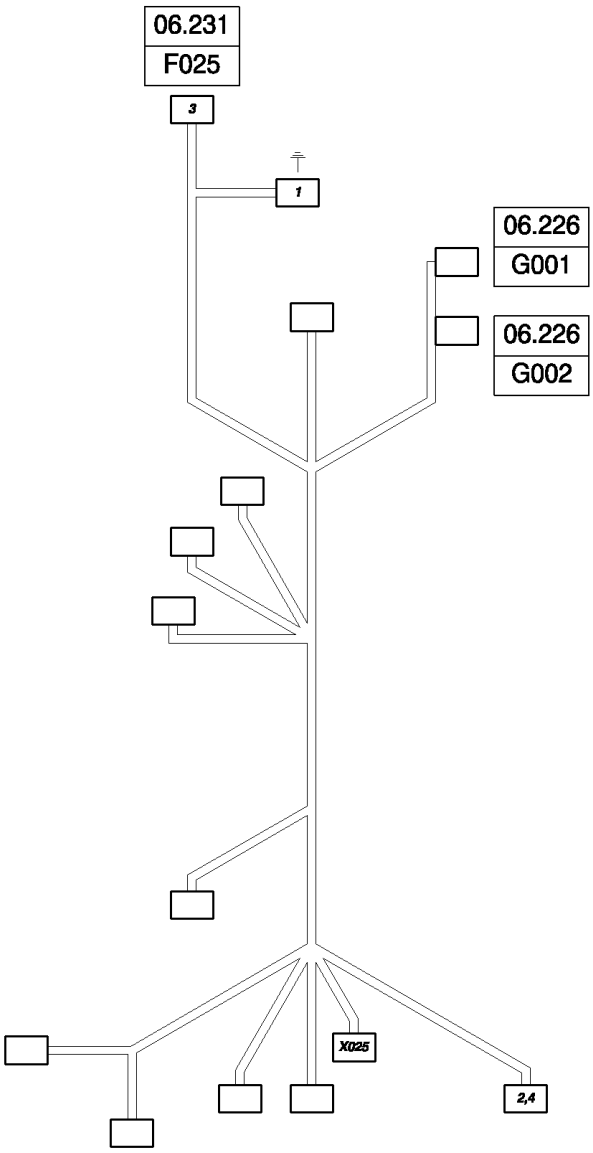

06.519(01) CABLE HARNESS : 84437237 - C375

ссылка	Номер детали	Кол-во	Описание
1	335481		TERMINAL, {PP:80335481}
2	80444851		TERMINAL,
3	455780		TERMINAL, {PP:80455780}
4	84038072		CABLE,
X02584074630			CONNECTOR, WIRE, X25
	84068583		PLUG,
	86500035		TERMINAL,

06.519(02) CABLE HARNESS : 84454005 - F376419

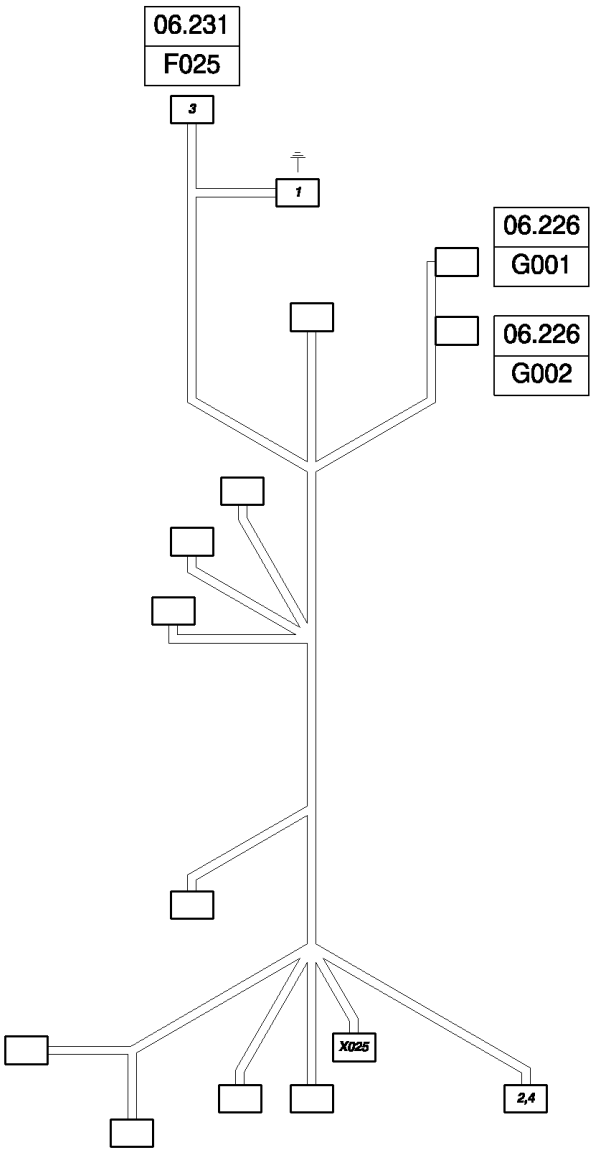

CS660 COMBINE BASE UNIT (1/03-) - Electrical System

06.519(02) CABLE HARNESS : 84454005 - F376419

ссылка	Номер детали	Кол-во	Описание
1	335481		TERMINAL, {PP:80335481}
2	80444851		TERMINAL,
3	455780		TERMINAL, {PP:80455780}
4	89850484		CAP, FLANGE COVER,
X02584074630			CONNECTOR, WIRE, X25
	84068583		PLUG,
	86500035		TERMINAL,

06.519(03) CABLE HARNESS : 84460721 - D420

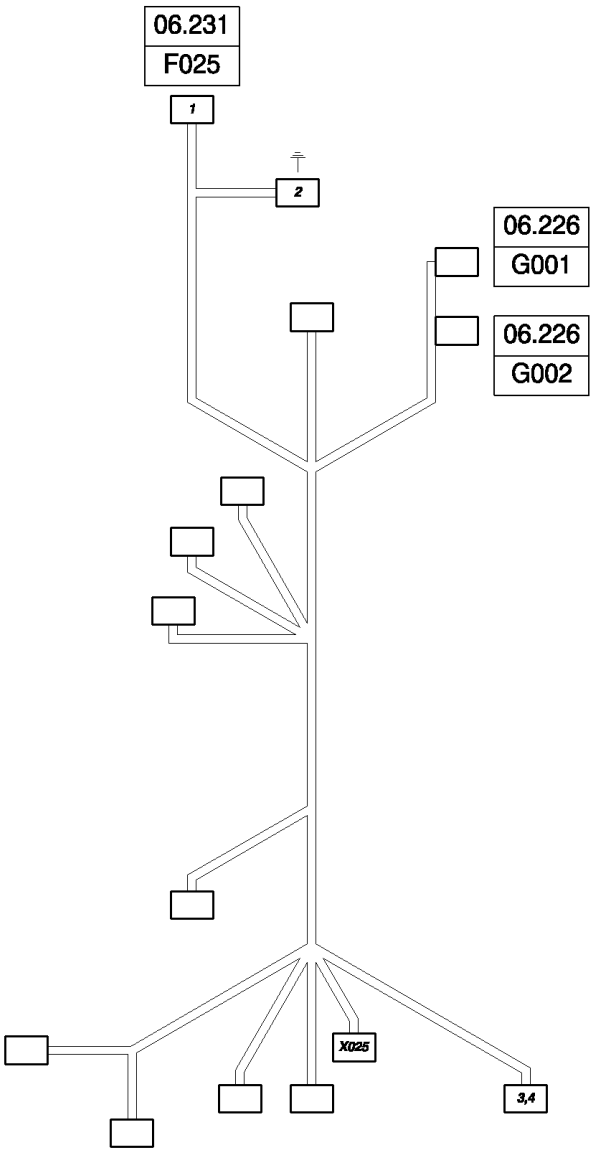

CS660 COMBINE BASE UNIT (1/03-) - Electrical System

06.519(03) CABLE HARNESS : 84460721 - D420

сылка	Номер детали	Кол-во	Описание
1	455780		TERMINAL,
2	335481		TERMINAL,
3	80444851		TERMINAL,
4	9850484		CAP, FLANGE COVER,
X02584074630			CONNECTOR, WIRE, X25
	86500166		PLUG,
	84068583		PLUG,
	86500035		TERMINAL,

06.521(01) CABLE HARNESS : 84437261 - C375

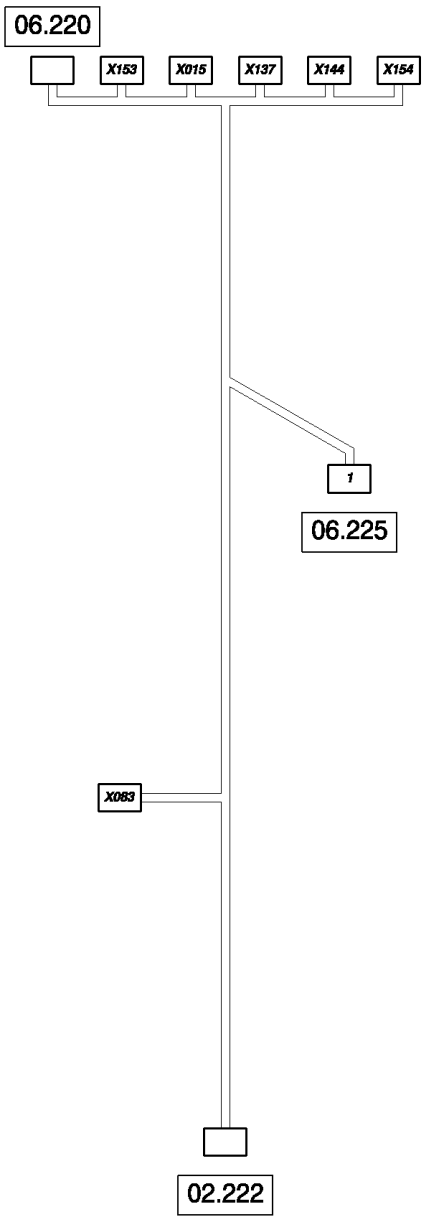

06.521(01) CABLE HARNESS : 84437261 - C375

ссылка	Номер детали	Кол-во	Описание
1	430026		TERMINAL, {PP:80430026}
X01586500036			PIN, ELECT TERMINAL, X15
X08384074630			CONNECTOR, WIRE, X83
	86500035		TERMINAL,
	86500166		PLUG,
X13786500036			PIN, ELECT TERMINAL, X137
X14486500036			PIN, ELECT TERMINAL, X144
X15384074630			CONNECTOR, WIRE, X153
	86500035		TERMINAL,
	86500166		PLUG,
X15486500036			PIN, ELECT TERMINAL, X154

06.521(02) CABLE HARNESS : 84454043 - D376

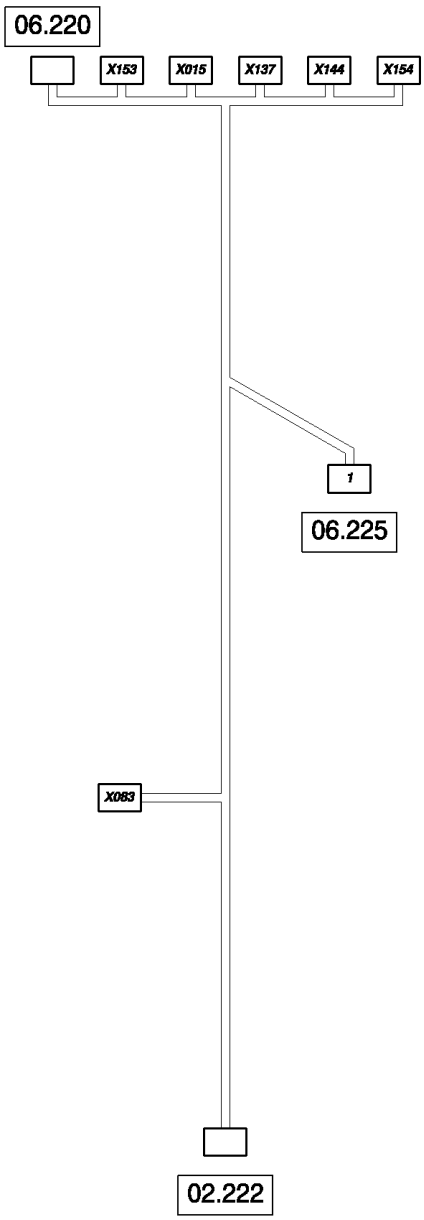

06.521(02) CABLE HARNESS : 84454043 - D376

ссылка	Номер детали	Кол-во	Описание
1	430026		TERMINAL, {PP:80430026}
S072			S72
X01586500036			PIN, ELECT TERMINAL, X15
X08384074630			CONNECTOR, WIRE, X83
	86500035		TERMINAL,
	86500166		PLUG,
X13786500036			PIN, ELECT TERMINAL, X137
X14486500036			PIN, ELECT TERMINAL, X144
X15384074630			CONNECTOR, WIRE, X153
	86500035		TERMINAL,
	86500166		PLUG,
X15486500036			PIN, ELECT TERMINAL, X154

06.522(01) CABLE HARNESS : 84437262

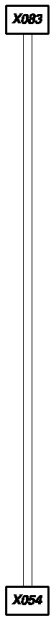

06.522(01) CABLE HARNESS : 84437262

ссылка	Номер детали	Кол-во	Описание
X05484074631			CONNECTOR, WIRE, X54
	86500036		PIN, ELECT TERMINAL,
	84074638		PLUG,
X08384074631			CONNECTOR, WIRE, X83
	86500036		PIN, ELECT TERMINAL,
	84074638		PLUG,

06.523(01) CABLE HARNESS : 84437263

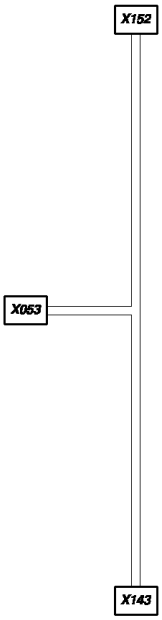

06.523(01) CABLE HARNESS : 84437263

ссылка	Номер детали	Кол-во	Описание
	X05384074631		CONNECTOR, WIRE, X53
	86500036		PIN, ELECT TERMINAL,
	84074638		PLUG,
	X14384449647		CONNECTOR, WIRE, X143
	86500036		PIN, ELECT TERMINAL,
	84806312		CONNECTOR, WIRE,
	X15284074630		CONNECTOR, WIRE, X152
	86500035		TERMINAL,
	86500036		PIN, ELECT TERMINAL,
	86500166		PLUG,

06.524(01) CABLE HARNESS : 84437273 - C319

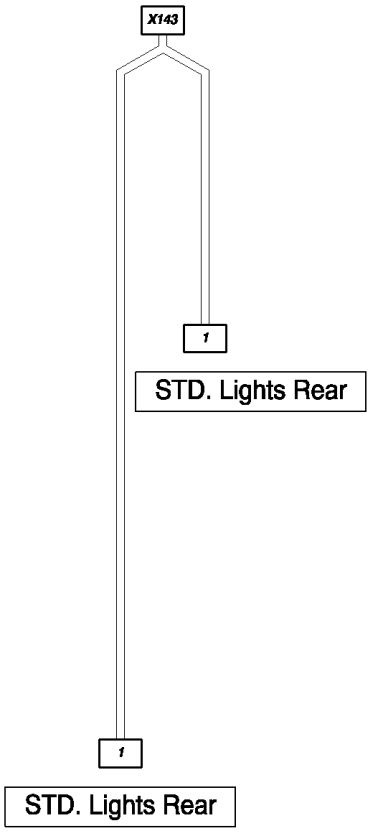

06.524(01) CABLE HARNESS : 84437273 - C319

ссылка	Номер детали	Кол-во	Описание
1	430026		TERMINAL, {PP:80430026}
X14	384806918		CONNECTOR, WIRE, X143
	86500035		TERMINAL,
	84806919		PLUG,

06.525(01) CABLE HARNESS : 84437294

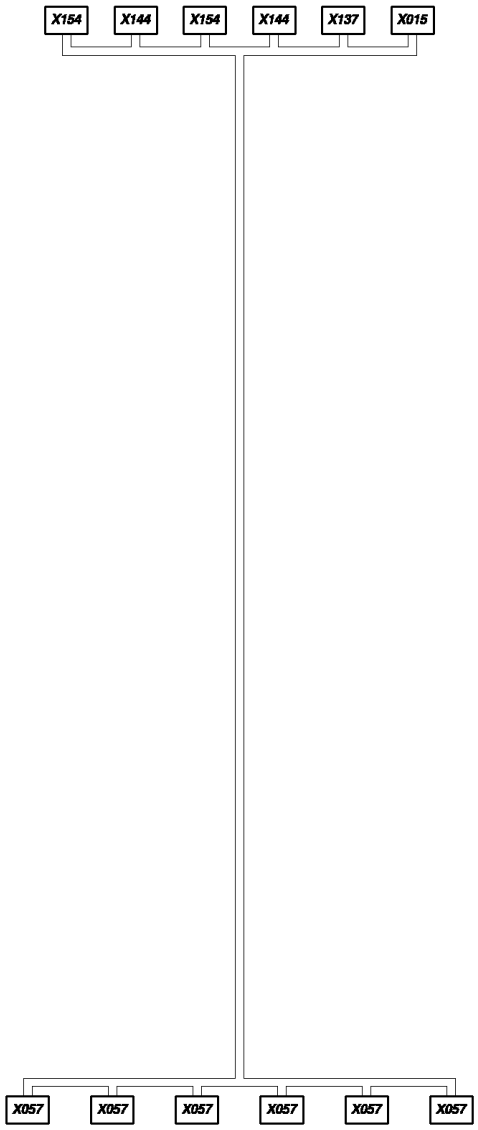

06.525(01) CABLE HARNESS : 84437294

ссылка	Номер детали	Кол-во	Описание
	X01586500036		PIN, ELECT TERMINAL, X15
	X057426199		TERMINAL, X57
	X13786500036		PIN, ELECT TERMINAL, X137
	X14486500036		PIN, ELECT TERMINAL, X144
	X15486500036		PIN, ELECT TERMINAL, X154

06.526(01) CABLE HARNESS : 84437301

06.526(01) CABLE HARNESS : 84437301

ссылка	Номер детали	Кол-во	Описание
X10	284806457		CONNECTOR, WIRE, X102
	84806460		CABLE TERMINAL,
	84100538		CONNECTOR, WIRE,
	84806458		CONNECTOR, WIRE,
X138	86500035		TERMINAL, X138

06.527(01) CABLE HARNESS : 84437313

06.527(01) CABLE HARNESS : 84437313

ссылка	Номер детали	Кол-во	Описание
	S022426199		TERMINAL, S22
	X03184074631		CONNECTOR, WIRE, X31
	86500036		PIN, ELECT TERMINAL,
	84074638		PLUG,

06.528(01) CABLE HARNESS : 84437319

06.528(01) CABLE HARNESS : 84437319

ссылка	Номер детали	Кол-во	Описание
S022426199			TERMINAL, S22
X08584074631			CONNECTOR, WIRE, X85
	86500036		PIN, ELECT TERMINAL,
	84074638		PLUG,

06.529(01) CABLE HARNESS : 84437323

06.529(01) CABLE HARNESS : 84437323

ссылка	Номер детали	Кол-во	Описание
	X07484074631		CONNECTOR, WIRE, X74
	86500036		PIN, ELECT TERMINAL,
	84074638		PLUG,
	X17884074630		CONNECTOR, WIRE, X178
	86500035		TERMINAL,
	86500166		PLUG,

06.530(01) CABLE HARNESS : 84437327

06.530(01) CABLE HARNESS : 84437327

ссылка	Номер детали	Кол-во	Описание
	X07384074630		CONNECTOR, WIRE, X73
	86500035		TERMINAL,
	86500166		PLUG,
	X16584074631		CONNECTOR, WIRE, X165
	86500036		PIN, ELECT TERMINAL,
	84074638		PLUG,

06.531(01) CABLE HARNESS : 84437346 - C375

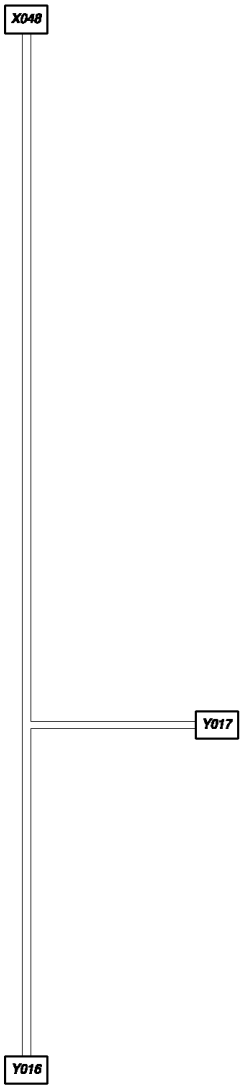

06.531(01) CABLE HARNESS : 84437346 - C375

ссылка	Номер детали	Кол-во	Описание
X04884814753			CONNECTOR, WIRE, X48
	84441874		CONNECTOR, WIRE,
	84068583		PLUG,
	86500036		PIN, ELECT TERMINAL,
Y01684607243			CONNECTOR, WIRE, Y16
	84607213		CONNECTOR, WIRE,
	84607244		TERMINAL,
	84607242		SEAL,
Y01784607243			CONNECTOR, WIRE, Y17
	84607213		CONNECTOR, WIRE,
	84607244		TERMINAL,
	84607242		SEAL,

06.531(02) CABLE HARNESS : 84454161 - D376

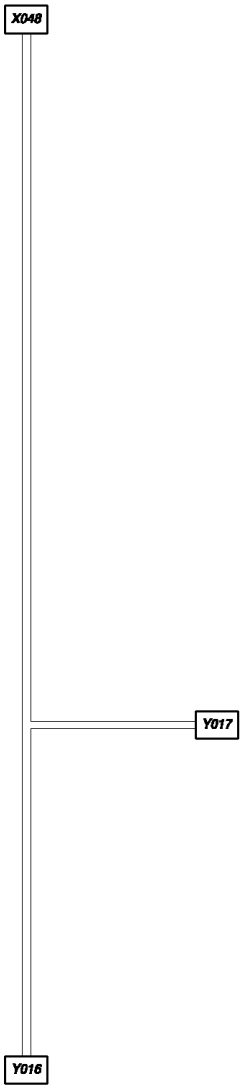

06.531(02) CABLE HARNESS : 84454161 - D376

ссылка	Номер детали	Кол-во	Описание
X04884814753			CONNECTOR, WIRE, X48
	84441874		CONNECTOR, WIRE,
	84068583		PLUG,
	86500036		PIN, ELECT TERMINAL,
	426199		TERMINAL, {PP:80426199}
Y01684607243			CONNECTOR, WIRE, Y16
	84607213		CONNECTOR, WIRE,
	84607244		TERMINAL,
	84607242		SEAL,
Y01784607243			CONNECTOR, WIRE, Y17
	84607213		CONNECTOR, WIRE,
	84607244		TERMINAL,
	84607242		SEAL,

06.532(01) CABLE HARNESS : 84437362

06.532(01) CABLE HARNESS : 84437362

ссылка	Номер детали	Кол-во	Описание
E012	751307		TERMINAL, E12
	751308		TERMINAL, {PP:80751308}
	84074632		CONNECTOR, WIRE, X66.1
	86500035		TERMINAL,
	9611173		PLUG, {PP:89611173}

06.533(01) CABLE HARNESS : 84437362

06.533(01) CABLE HARNESS : 84437362

ссылка	Номер детали	Кол-во	Описание
E013751307			TERMINAL, E13
	751308		TERMINAL, {PP:80751308}
	84074632		CONNECTOR, WIRE, X67.1
	86500035		TERMINAL,
	9611173		PLUG, {PP:89611173}

06.534(01) CABLE HARNESS : 84437371

06.534(01) CABLE HARNESS : 84437371

ссылка	Номер детали	Кол-во	Описание
	E005441166		TERMINAL, E5
	X04684074635		CONNECTOR, WIRE, X46
	86500036		PIN, ELECT TERMINAL,
	84074639		CONNECTOR, WIRE,

06.535(01) CABLE HARNESS : 84437374

06.535(01) CABLE HARNESS : 84437374

ссылка	Номер детали	Кол-во	Описание
X04784074635			CONNECTOR, WIRE, X47
	86500036		PIN, ELECT TERMINAL,
	84074639		CONNECTOR, WIRE,
E010441166			TERMINAL, E10

06.536(01) CABLE HARNESS : 84441116

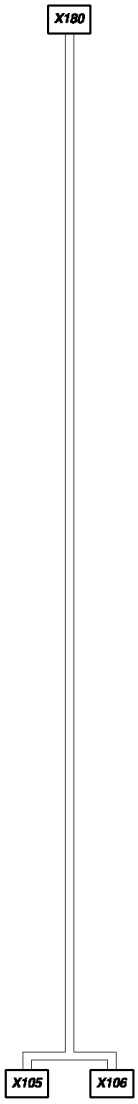

06.536(01) CABLE HARNESS : 84441116

ссылка	Номер детали	Кол-во	Описание
X105	84074637		CONNECTOR, WIRE, X105
	80447904		CONNECTOR, WIRE,
	86500036		PIN, ELECT TERMINAL,
	84074640		PLUG,
X106	84074635		CONNECTOR, WIRE, X106
	86500036		PIN, ELECT TERMINAL,
	84074639		CONNECTOR, WIRE,
X180	84806918		CONNECTOR, WIRE, X180
	84068583		PLUG,
	86500035		TERMINAL,
	84806919		PLUG,

06.537(01) CABLE HARNESS : 84441135

06.537(01) CABLE HARNESS : 84441135

ссылка	Номер детали	Кол-во	Описание
X10	484074637		CONNECTOR, WIRE, X104
	86500036		PIN, ELECT TERMINAL,
	84074640		PLUG,
X17	984074632		CONNECTOR, WIRE, X179
	86500035		TERMINAL,
	9611173		PLUG, {PP:89611173}

06.538(01) CABLE HARNESS : 84441145

06.538(01) CABLE HARNESS : 84441145

ссылка	Номер детали	Кол-во	Описание
X10484074636			CONNECTOR, WIRE, X104
	86500035		TERMINAL,
	9861376		CONNECTOR, WIRE, {PP:89861376}

06.539(01) CABLE HARNESS : 84441145

06.539(01) CABLE HARNESS : 84441145

ссылка	Номер детали	Кол-во	Описание
X10584074636			CONNECTOR, WIRE, X105
	86500035		TERMINAL,
	9861376		CONNECTOR, WIRE, {PP:89861376}

06.540(01) CABLE HARNESS : 84441356

06.540(01) CABLE HARNESS : 84441356

ссылка	Номер детали	Кол-во	Описание
	S035441166		TERMINAL, S35
	X04184074630		CONNECTOR, WIRE, X41
	86500035		TERMINAL,
	86500166		PLUG,

06.541(01) CABLE HARNESS : 84441378 - C363

06.541(01) CABLE HARNESS : 84441378 - C363

ссылка	Номер детали	Кол-во	Описание
S036441159			CONNECTOR, WIRE, S36
	441166		TERMINAL, {PP:80441166}
X04284074631			CONNECTOR, WIRE, X42
	86500036		PIN, ELECT TERMINAL,
	84074638		PLUG,

06.542(01) CABLE HARNESS : 84441420 - C319

06.542(01) CABLE HARNESS : 84441420 - C319

ссылка	Номер детали	Кол-во	Описание
E005441166			TERMINAL, E5
	441167		TERMINAL, {PP:80441167}
X04684074635			CONNECTOR, WIRE, X46
	86500036		PIN, ELECT TERMINAL,
	84074639		CONNECTOR, WIRE,

06.543(01) CABLE HARNESS : 84441421 - C319

06.543(01) CABLE HARNESS : 84441421 - C319

ссылка	Номер детали	Кол-во	Описание
E010441166			TERMINAL, E10
	441167		TERMINAL, {PP:80441167}
X04784074635			CONNECTOR, WIRE, X47
	86500036		PIN, ELECT TERMINAL,
	84074639		CONNECTOR, WIRE,

06.544(01) CABLE HARNESS : 84441436

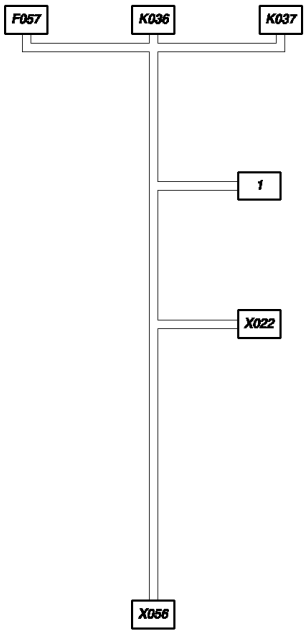

06.544(01) CABLE HARNESS : 84441436

ссылка	Номер детали	Кол-во	Описание
1	335481		TERMINAL, {PP:80335481}
F0579811772			FUSE HOLDER, F57
	84100299		FUSE,
	9813989		TERMINAL, {PP:89813989}
	334787		CONNECTOR, HYD., {PP:80334787}
K036439588			SUPPORT, K36
	334594		TERMINAL, {PP:80334594}
	334588		TERMINAL, {PP:80334588}
K037439588			SUPPORT, K37
	334594		TERMINAL, {PP:80334594}
	334588		TERMINAL, {PP:80334588}
X02284074636			CONNECTOR, WIRE, X22
	86500035		TERMINAL,
	9861376		CONNECTOR, WIRE, {PP:89861376}
X056916791			CONNECTOR, WIRE, X56
	445522		TERMINAL, {PP:80445522}
	9513123		TERMINAL, {PP:89513123}

06.545(01) CABLE HARNESS : 84441529

06.545(01) CABLE HARNESS : 84441529

ссылка	Номер детали	Кол-во	Описание
1	335483		TERMINAL, {PP:80335483}
A00880334592			TERMINAL, A8

06.546(01) CABLE HARNESS : 84441546 - C375

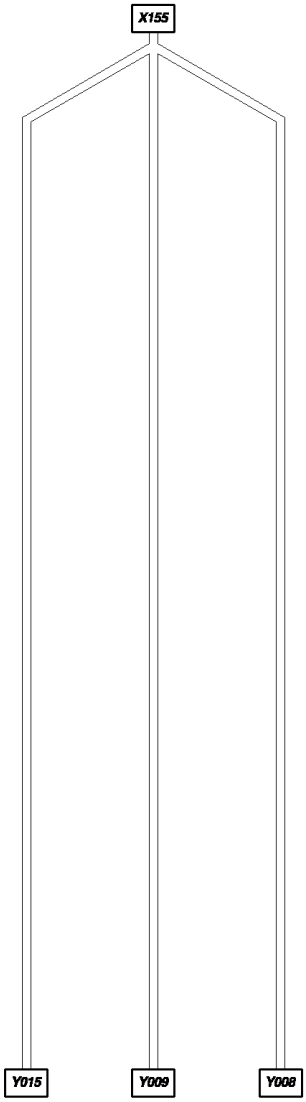

06.546(01) CABLE HARNESS : 84441546 - C375

ссылка	Номер детали	Кол-во	Описание
X15584074642			CONNECTOR, WIRE, X155
	86500035		TERMINAL,
	89861378		PLUG,
Y00884053064			LABEL, Y8
Y00984053064			LABEL, Y9
Y01584053064			LABEL, Y15

06.546(02) CABLE HARNESS : 87038397 - D376

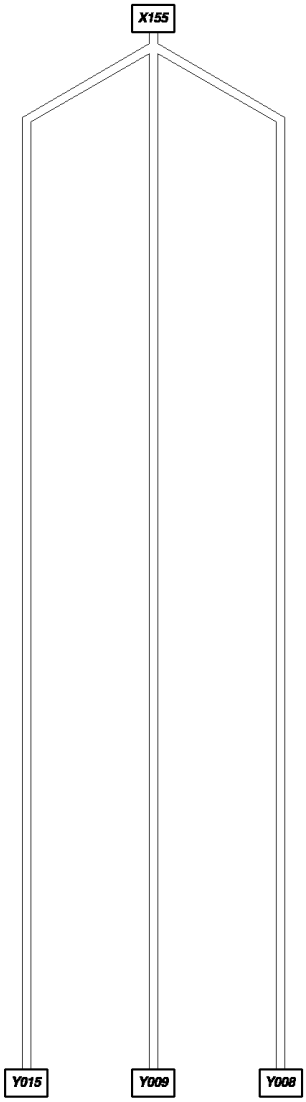

06.546(02) CABLE HARNESS : 87038397 - D376

ссылка	Номер детали	Кол-во	Описание
X15584074642			CONNECTOR, WIRE, X155
	86500035		TERMINAL,
	89861378		PLUG,
Y008			Y8
Y009			Y9
Y015			Y15

06.547(01) CABLE HARNESS : 84441573

06.547(01) CABLE HARNESS : 84441573

ссылка	Номер детали	Кол-во	Описание
	S07284818205		CONNECTOR, WIRE, S72
	426199		TERMINAL, {PP:80426199}
	X15684074632		CONNECTOR, WIRE, X156
	86500035		TERMINAL,
	9611173		PLUG, {PP:89611173}

06.548(01) CABLE HARNESS : 84441663

06.548(01) CABLE HARNESS : 84441663

ссылка	Номер детали	Кол-во	Описание
S022441159			CONNECTOR, WIRE, S22
	441166		TERMINAL, {PP:80441166}
X08584074630			CONNECTOR, WIRE, X85
	86500035		TERMINAL,
	86500166		PLUG,

06.549(01) CABLE HARNESS : 84444502

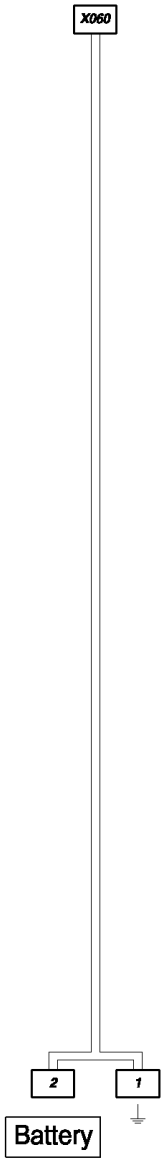

06.549(01) CABLE HARNESS : 84444502

ссылка	Номер детали	Кол-во	Описание
1	80444852		TERMINAL,
2	455780		TERMINAL, {PP:80455780}
X06	084814774		CONNECTOR, WIRE, X60
	84814863		CONNECTOR, WIRE,
	84814866		CONNECTOR, WIRE,
	84814865		CABLE TERMINAL,

06.550(01) CABLE HARNESS : 84444502

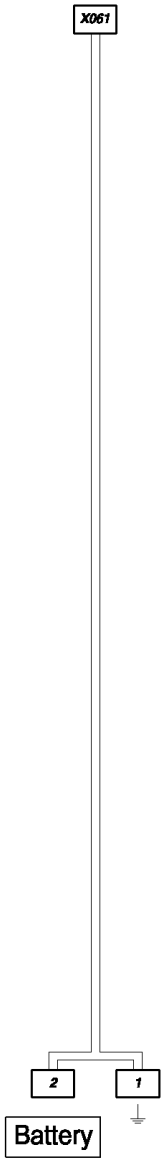

06.550(01) CABLE HARNESS : 84444502

ссылка	Номер детали	Кол-во	Описание
1	80444852		TERMINAL,
2	455780		TERMINAL, {PP:80455780}
X06	184814774		CONNECTOR, WIRE, X61
	84814863		CONNECTOR, WIRE,
	84814866		CONNECTOR, WIRE,
	84814865		CABLE TERMINAL,

06.551(01) CABLE HARNESS : 84444503

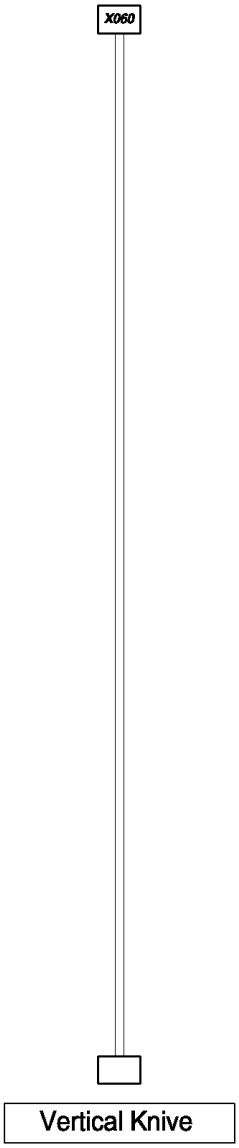

06.551(01) CABLE HARNESS : 84444503

ссылка	Номер детали	Кол-во	Описание
X06	084814773		CONNECTOR, WIRE, X60
	84814863		CONNECTOR, WIRE,
	84814866		CONNECTOR, WIRE,
	84814864		CABLE TERMINAL,

06.552(01) CABLE HARNESS : 84444503

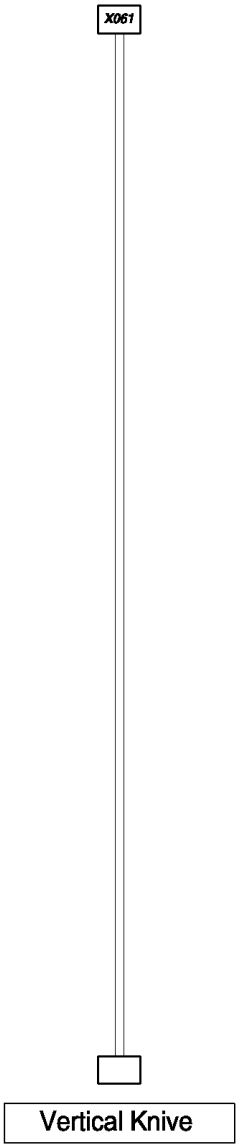

06.552(01) CABLE HARNESS : 84444503

ссылка	Номер детали	Кол-во	Описание
X06184814773			CONNECTOR, WIRE, X61
	84814863		CONNECTOR, WIRE,
	84814866		CONNECTOR, WIRE,
	84814864		CABLE TERMINAL,

06.553(01) CABLE HARNESS : 84444504

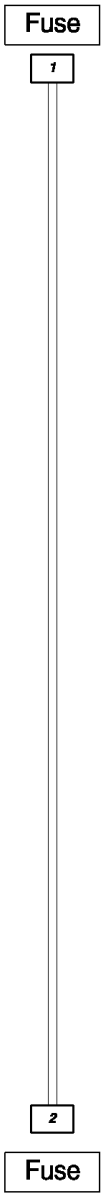

06.553(01) CABLE HARNESS : 84444504

ссылка	Номер детали	Кол-во	Описание
1	455780		TERMINAL,
2	80444853		CABLE TERMINAL,

06.554(01) CABLE HARNESS : 84444505

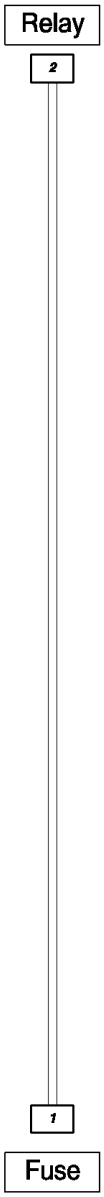

06.554(01) CABLE HARNESS : 84444505

ссылка	Номер детали	Кол-во	Описание
1	455780		TERMINAL, {PP:80455780}
2	80444853		CABLE TERMINAL,

06.555(01) CABLE HARNESS : 84444962

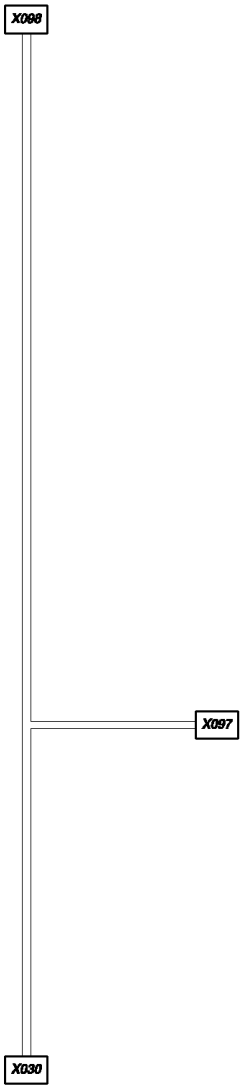

06.555(01) CABLE HARNESS : 84444962

ссылка	Номер детали	Кол-во	Описание
X03084074631			CONNECTOR, WIRE, X30
	86500036		PIN, ELECT TERMINAL,
	84074638		PLUG,
X09784074631			CONNECTOR, WIRE, X97
	86500036		PIN, ELECT TERMINAL,
	84074638		PLUG,
X09884074637			CONNECTOR, WIRE, X98
	86500036		PIN, ELECT TERMINAL,
	84074640		PLUG,

06.556(01) CABLE HARNESS : 84446931

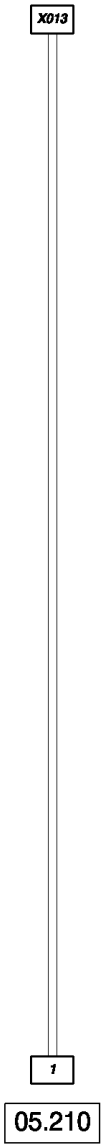

06.556(01) CABLE HARNESS : 84446931

ссылка	Номер детали	Кол-во	Описание
1	335316		TERMINAL, {PP:80335316}
X01	384074630		CONNECTOR, WIRE, X13
	84068583		PLUG,
	86500035		TERMINAL,
	86500166		PLUG,

06.557(01) CABLE HARNESS : 84447204

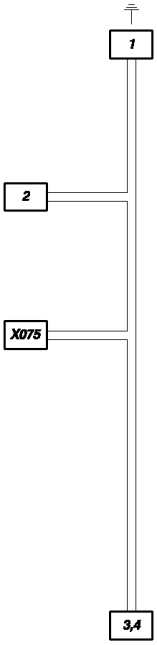

06.557(01) CABLE HARNESS : 84447204

сылка	Номер детали	Кол-во	Описание
1	80919749		CABLE TERMINAL,
2	334588		TERMINAL, {PP:80334588}
3	441167		TERMINAL, {PP:80441167}
4	441159		CONNECTOR, WIRE, {PP:80441159}
X07584100536			CONNECTOR, WIRE, X75
	84100537		TERMINAL,
	84100538		CONNECTOR, WIRE,

06.559(01) CABLE HARNESS : 84447791 - D320

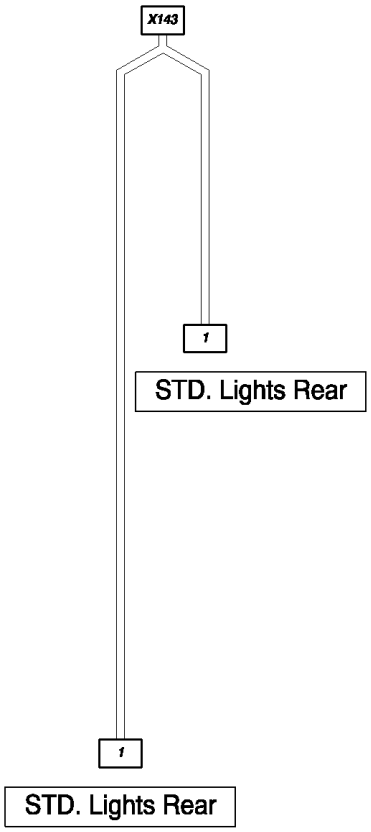

06.559(01) CABLE HARNESS : 84447791 - D320

ссылка	Номер детали	Кол-во	Описание
1	430026		TERMINAL, {PP:80430026}
X14	384806918		CONNECTOR, WIRE, X143
	86500035		TERMINAL,
	84806919		PLUG,

06.560(01) CABLE HARNESS : 84448032

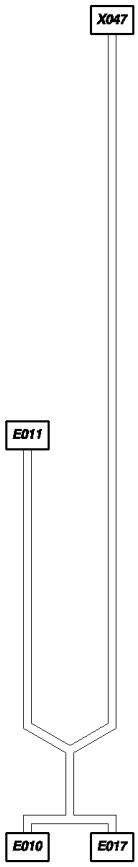

06.560(01) CABLE HARNESS : 84448032

ссылка	Номер детали	Кол-во	Описание
	E005441167		TERMINAL, E5
	E006334787		CONNECTOR, HYD., E6
	426199		TERMINAL, {PP:80426199}
	E018441166		TERMINAL, E18
	441167		TERMINAL, {PP:80441167}
	X04784074635		CONNECTOR, WIRE, X47
	86500036		PIN, ELECT TERMINAL,
	84074639		CONNECTOR, WIRE,

06.561(01) CABLE HARNESS : 84448033

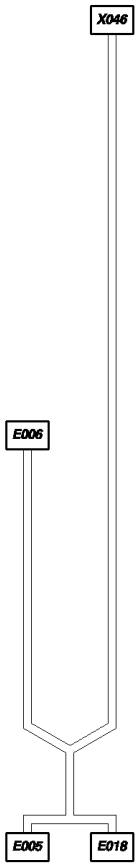

06.561(01) CABLE HARNESS : 84448033

ссылка	Номер детали	Кол-во	Описание
	E010441167		TERMINAL, E10
	E011334787		CONNECTOR, HYD., E11
	426199		TERMINAL, {PP:80426199}
	E017441166		TERMINAL, E17
	441167		TERMINAL, {PP:80441167}
	X04684074635		CONNECTOR, WIRE, X46
	86500036		PIN, ELECT TERMINAL,
	84074639		CONNECTOR, WIRE,

06.562(01) CABLE HARNESS : 84448037 - D320

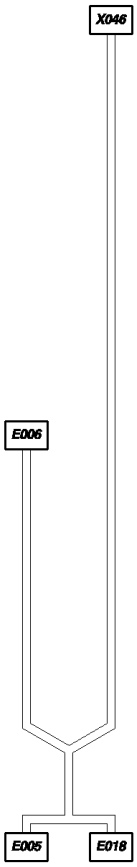

06.562(01) CABLE HARNESS : 84448037 - D320

ссылка	Номер детали	Кол-во	Описание
	E005441167		TERMINAL, E5
	E006441166		TERMINAL, E6
	E018441166		TERMINAL, E18
	441167		TERMINAL, {PP:80441167}
	X04684074635		CONNECTOR, WIRE, X46
	86500036		PIN, ELECT TERMINAL,

06.563(01) CABLE HARNESS : 84448038 - D320

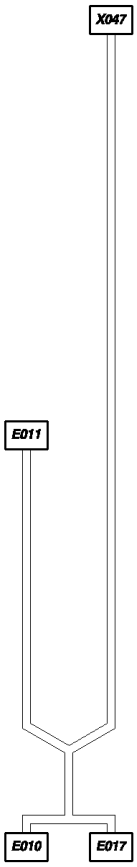

06.563(01) CABLE HARNESS : 84448038 - D320

ссылка	Номер детали	Кол-во	Описание
	E010441167		TERMINAL, E10
	E011441166		TERMINAL, E11
	E017441166		TERMINAL, E17
	441167		TERMINAL, {PP:80441167}
	X04784074635		CONNECTOR, WIRE, X47
	86500036		PIN, ELECT TERMINAL,
	84074639		CONNECTOR, WIRE,

06.564(01) CABLE HARNESS : 84448631

06.564(01) CABLE HARNESS : 84448631

ссылка	Номер детали	Кол-во	Описание
1	426199		TERMINAL, {PP:80426199}
X1	1884074632		CONNECTOR, WIRE, X118
	86500035		TERMINAL,
	9611173		PLUG, {PP:89611173}

06.565(01) CABLE HARNESS : 84448631

06.565(01) CABLE HARNESS : 84448631

ссылка	Номер детали	Кол-во	Описание
1	426199		TERMINAL, {PP:80426199}
X11	984074632		CONNECTOR, WIRE, X119
	86500035		TERMINAL,
	9611173		PLUG, {PP:89611173}

06.567(01) CABLE HARNESS : 84448868

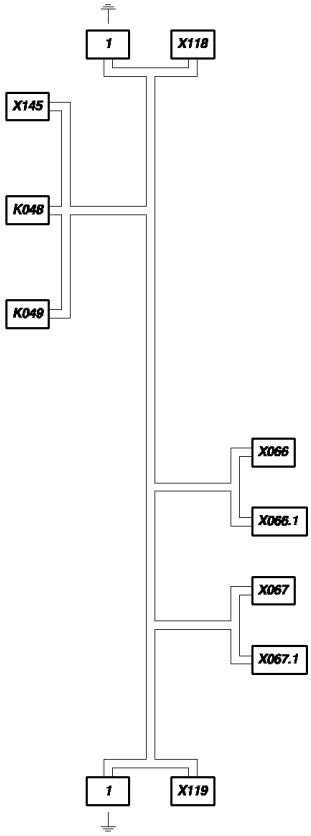

06.567(01) CABLE HARNESS : 84448868

ссылка	Номер детали	Кол-во	Описание
1	335482		TERMINAL, {PP:80335482}
K048	439588		SUPPORT, K48
	334588		TERMINAL, {PP:80334588}
	334594		TERMINAL, {PP:80334594}
K049	439588		SUPPORT, K49
	334588		TERMINAL, {PP:80334588}
	334594		TERMINAL, {PP:80334594}
X06684	074632		CONNECTOR, WIRE, X66
	86500035		TERMINAL,
	9611173		PLUG, {PP:89611173}
	84074635		CONNECTOR, WIRE, X66.1
	86500036		PIN, ELECT TERMINAL,
	84074639		CONNECTOR, WIRE,
X06784	074632		CONNECTOR, WIRE, X67
	84068583		PLUG,
	86500035		TERMINAL,
	9611173		PLUG, {PP:89611173}
	84074635		CONNECTOR, WIRE, X67.1
	86500036		PIN, ELECT TERMINAL,
	84074639		CONNECTOR, WIRE,
X11884	074635		CONNECTOR, WIRE, X118
	86500036		PIN, ELECT TERMINAL,
	84074639		CONNECTOR, WIRE,
X11984	074635		CONNECTOR, WIRE, X119
	86500036		PIN, ELECT TERMINAL,
	84074639		CONNECTOR, WIRE,
X14584	074631		CONNECTOR, WIRE, X145
	86500036		PIN, ELECT TERMINAL,
	84074638		PLUG,

06.568(01) CABLE HARNESS : 84448908

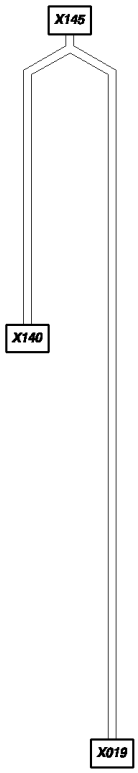

06.568(01) CABLE HARNESS : 84448908

ссылка	Номер детали	Кол-во	Описание
	X01986500036		PIN, ELECT TERMINAL, X19
	X14084074632		CONNECTOR, WIRE, X140
	86500035		TERMINAL,
	9611173		PLUG, {PP:89611173}
	X14584074630		CONNECTOR, WIRE, X145
	86500035		TERMINAL,
	86500166		PLUG,

06.569(01) CABLE HARNESS : 84449887 - F364375

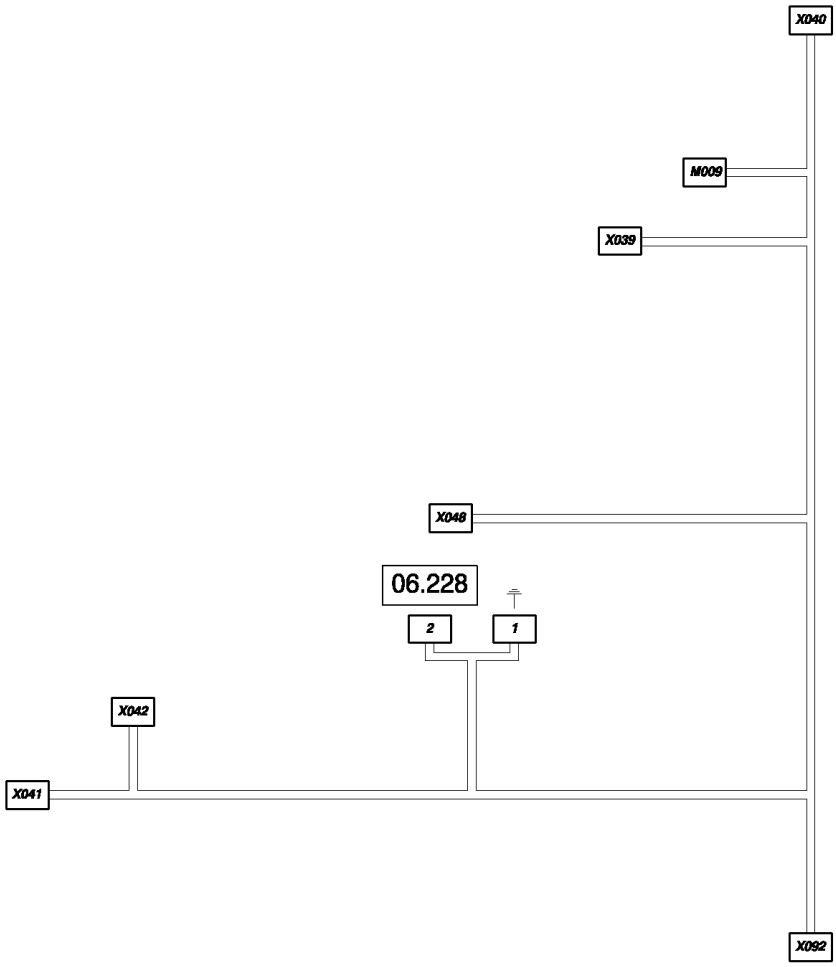

06.569(01) CABLE HARNESS : 84449887 - F364375

ссылка	Номер детали	Кол-во	Описание
1	334787		CONNECTOR, HYD., {PP:80334787}
2	426199		TERMINAL, {PP:80426199}
M00	441166		TERMINAL, M9
	441167		TERMINAL, {PP:80441167}
	441159		CONNECTOR, WIRE, {PP:80441159}
X03	984806091		CONNECTOR, WIRE, X39
	84806090		CONNECTOR, WIRE,
	84607244		TERMINAL,
	84607242		SEAL,
X04	084400773		CONNECTOR, WIRE, X40
	84441874		CONNECTOR, WIRE,
	84068583		PLUG,
	86500035		TERMINAL,
X04	184074631		CONNECTOR, WIRE, X41
	86500036		PIN, ELECT TERMINAL,
	84074638		PLUG,
X04	284074630		CONNECTOR, WIRE, X42
	86500035		TERMINAL,
	86500166		PLUG,
X04	884400771		CONNECTOR, WIRE, X48
	84441874		CONNECTOR, WIRE,
	84068583		PLUG,
	86500035		TERMINAL,
X09	284074635		CONNECTOR, WIRE, X92
	86500036		PIN, ELECT TERMINAL,
	84074639		CONNECTOR, WIRE,

06.569(02) CABLE HARNESS : 84454160 - D364

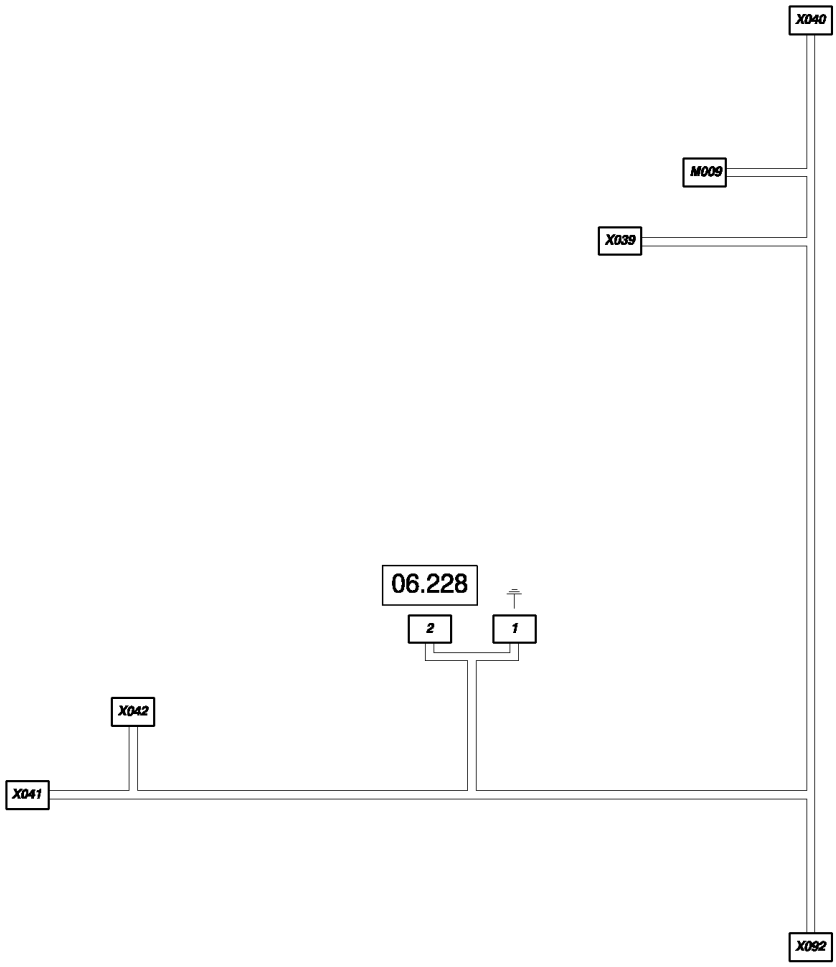

06.569(02) CABLE HARNESS : 84454160 - D364

ссылка	Номер детали	Кол-во	Описание
1	334787		CONNECTOR, HYD., {PP:80334787}
2	426199		TERMINAL, {PP:80426199}
M009	441166		TERMINAL, M9
	441167		TERMINAL, {PP:80441167}
	441159		CONNECTOR, WIRE, {PP:80441159}
X039	84806091		CONNECTOR, WIRE, X39
	84806090		CONNECTOR, WIRE,
	84607244		TERMINAL,
	84607242		SEAL,
X040	84400773		CONNECTOR, WIRE, X40
	84441874		CONNECTOR, WIRE,
	84068583		PLUG,
	86500035		TERMINAL,
X041	84074631		CONNECTOR, WIRE, X41
	86500036		PIN, ELECT TERMINAL,
	84074638		PLUG,
X042	84074630		CONNECTOR, WIRE, X42
	86500035		TERMINAL,
	86500166		PLUG,
X092	84074635		CONNECTOR, WIRE, X92
	86500036		PIN, ELECT TERMINAL,
	84074639		CONNECTOR, WIRE,

06.571(01) CABLE HARNESS : 84449919 - D364

06.571(01) CABLE HARNESS : 84449919 - D364

ссылка	Номер детали	Кол-во	Описание
	S036441166		TERMINAL, S36
	X04284074631		CONNECTOR, WIRE, X42
	86500036		PIN, ELECT TERMINAL,
	84074638		PLUG,

06.572(01) CABLE HARNESS : 84452019 - F364375

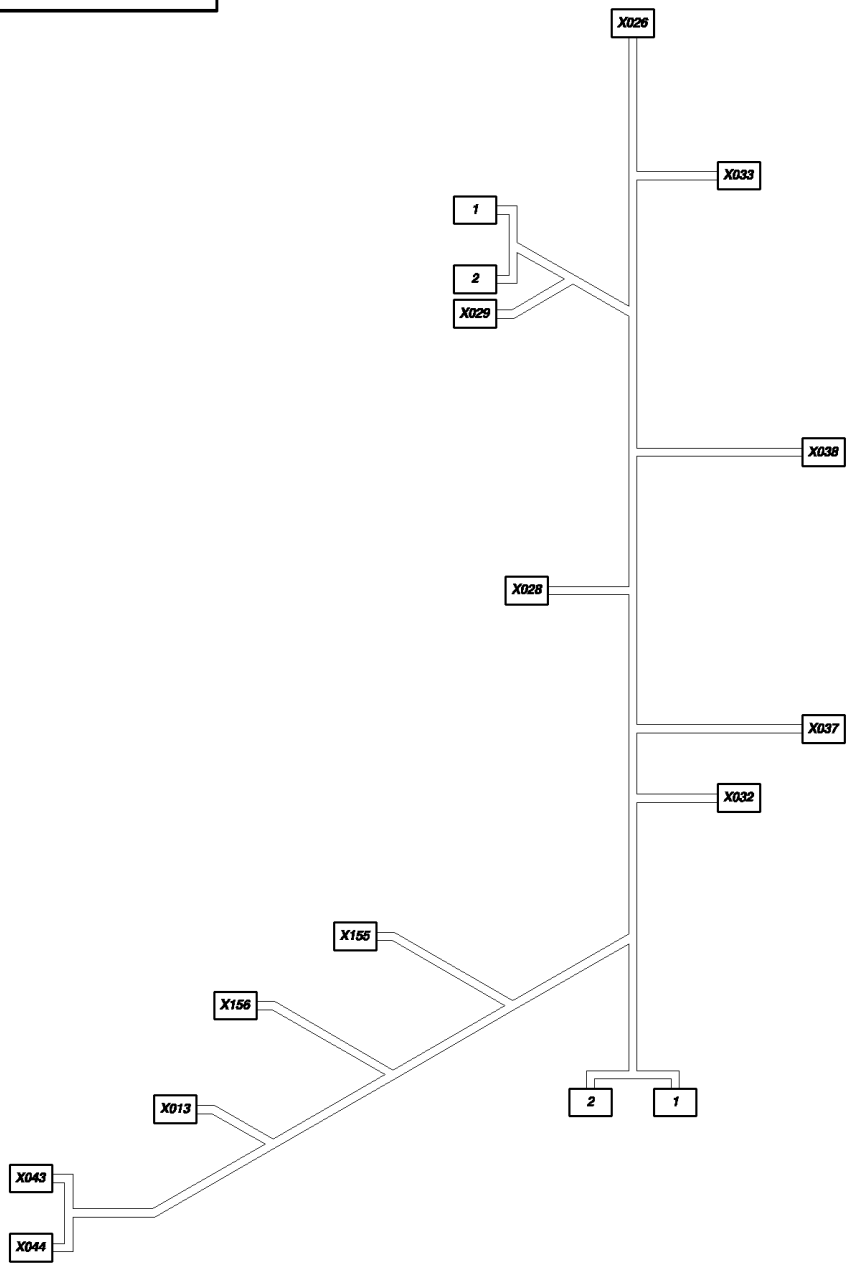

06.572(01) CABLE HARNESS : 84452019 - F364375

ссылка	Номер детали	Кол-во	Описание
1	84607920		
2	84607921		HOSE,
X01384074631			CONNECTOR, WIRE, X13
	84068583		PLUG,
	86500036		PIN, ELECT TERMINAL,
	84074638		PLUG,
X02684400776			CONNECTOR, WIRE, X26
	84441874		CONNECTOR, WIRE,
	86500035		TERMINAL,
X02884074631			CONNECTOR, WIRE, X28
	86500036		PIN, ELECT TERMINAL,
	84074638		PLUG,
X02984074631			CONNECTOR, WIRE, X29
	86500036		PIN, ELECT TERMINAL,
	84074638		PLUG,
X03284074631			CONNECTOR, WIRE, X32
	86500036		PIN, ELECT TERMINAL,
	84074638		PLUG,
X03384074631			CONNECTOR, WIRE, X33
	86500036		PIN, ELECT TERMINAL,
	84074638		PLUG,
X03784074631			CONNECTOR, WIRE, X37
	86500036		PIN, ELECT TERMINAL,
	84074638		PLUG,
X03884449647			CONNECTOR, WIRE, X38
	86500036		PIN, ELECT TERMINAL,
	84806312		CONNECTOR, WIRE,
X04384400439			CONNECTOR, WIRE, X43
	84400440		CONNECTOR, WIRE,
	80446236		CABLE TERMINAL,
	84400441		PLUG,
X04484400439			CONNECTOR, WIRE, X44
	84400440		CONNECTOR, WIRE,
	80446236		CABLE TERMINAL,
	84400441		PLUG,
X15584074643			CONNECTOR, WIRE, X155
	86500036		PIN, ELECT TERMINAL,
	84074641		PLUG,
X15684074635			CONNECTOR, WIRE, X156
	86500036		PIN, ELECT TERMINAL,
	84074639		CONNECTOR, WIRE,

06.572(02) CABLE HARNESS : 84454028 - D376

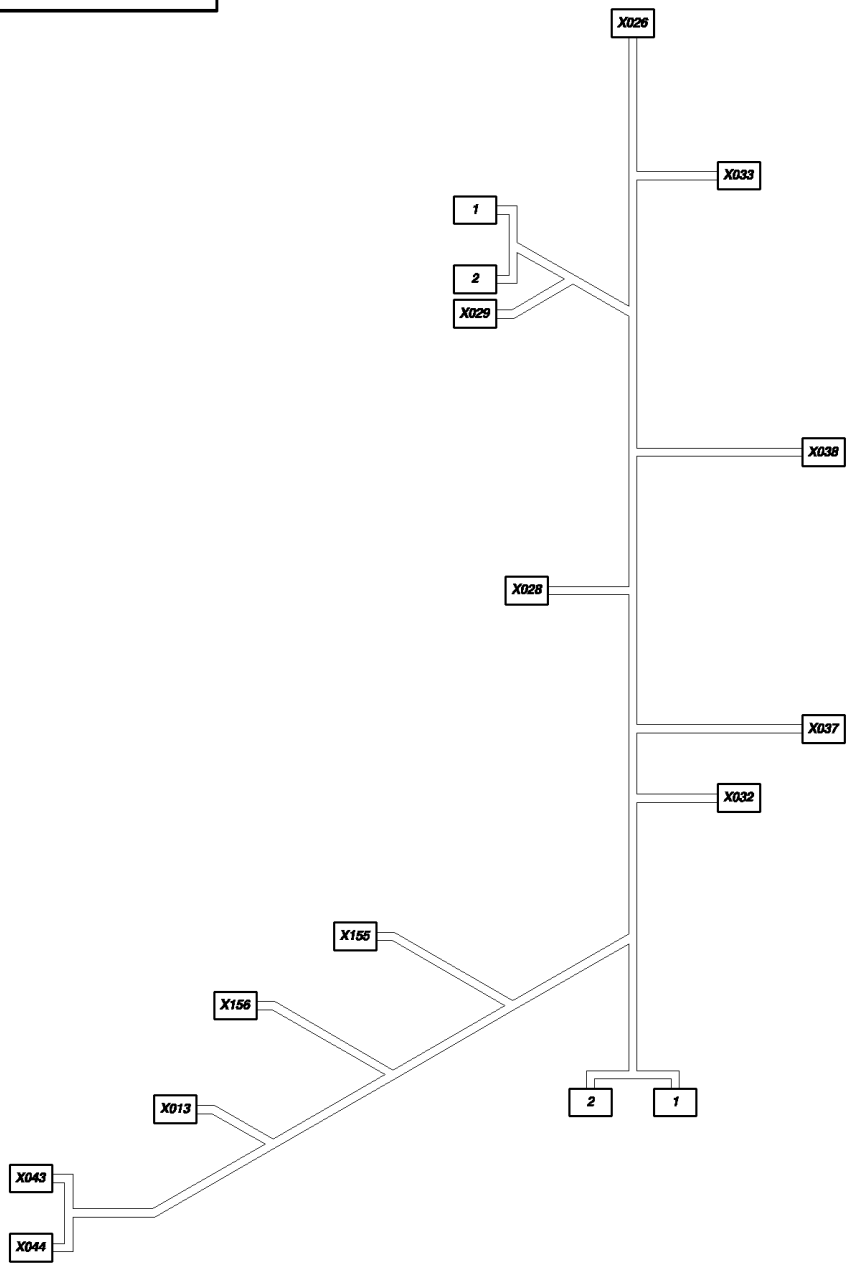

06.572(02) CABLE HARNESS : 84454028 - D376

ссылка	Номер детали	Кол-во	Описание
1	84607920		
2	84607921		HOSE,
X01384074631			CONNECTOR, WIRE, X13
	84068583		PLUG,
	86500036		PIN, ELECT TERMINAL,
	84074638		PLUG,
X02684400776			CONNECTOR, WIRE, X26
	84441874		CONNECTOR, WIRE,
	86500035		TERMINAL,
X02884074631			CONNECTOR, WIRE, X28
	86500036		PIN, ELECT TERMINAL,
	84074638		PLUG,
X02984074631			CONNECTOR, WIRE, X29
	86500036		PIN, ELECT TERMINAL,
	84074638		PLUG,
X03284074631			CONNECTOR, WIRE, X32
	86500036		PIN, ELECT TERMINAL,
	84074638		PLUG,
X03384074631			CONNECTOR, WIRE, X33
	86500036		PIN, ELECT TERMINAL,
	84074638		PLUG,
X03784074631			CONNECTOR, WIRE, X37
	86500036		PIN, ELECT TERMINAL,
	84074638		PLUG,
X03884449647			CONNECTOR, WIRE, X38
	86500036		PIN, ELECT TERMINAL,
	84806312		CONNECTOR, WIRE,
X04384400439			CONNECTOR, WIRE, X43
	84400440		CONNECTOR, WIRE,
	80446236		CABLE TERMINAL,
	84400441		PLUG,
X04484400439			CONNECTOR, WIRE, X44
	84400440		CONNECTOR, WIRE,
	80446236		CABLE TERMINAL,
	84400441		PLUG,
X15584074643			CONNECTOR, WIRE, X155
	86500036		PIN, ELECT TERMINAL,
	84074641		PLUG,
X15684074635			CONNECTOR, WIRE, X156
	86500036		PIN, ELECT TERMINAL,
	84074639		CONNECTOR, WIRE,

06.573(01) CABLE HARNESS : 84452029 - D364

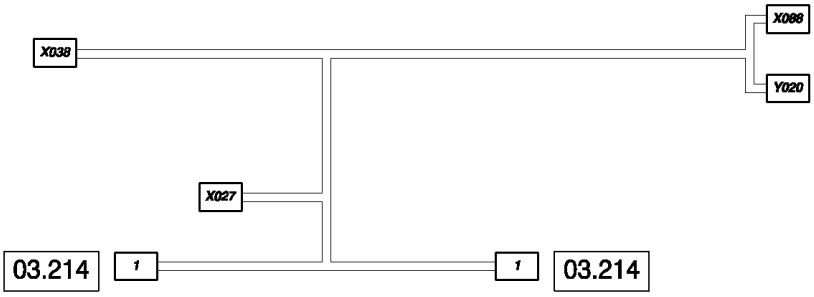

06.573(01) CABLE HARNESS : 84452029 - D364

ссылка	Номер детали	Кол-во	Описание
1	84004134		TERMINAL,
X02784074631			CONNECTOR, WIRE, X27
	86500036		PIN, ELECT TERMINAL,
	84074638		PLUG,
X03884806918			CONNECTOR, WIRE, X38
	86500035		TERMINAL,
	84806919		PLUG,
X08884078681			CONNECTOR, WIRE, X88
	84078682		TERMINAL,
Y02084019407			CONNECTOR, HYD., Y20
	426199		TERMINAL, {PP:80426199}

06.574(01) CABLE HARNESS : 84452210 - F364409

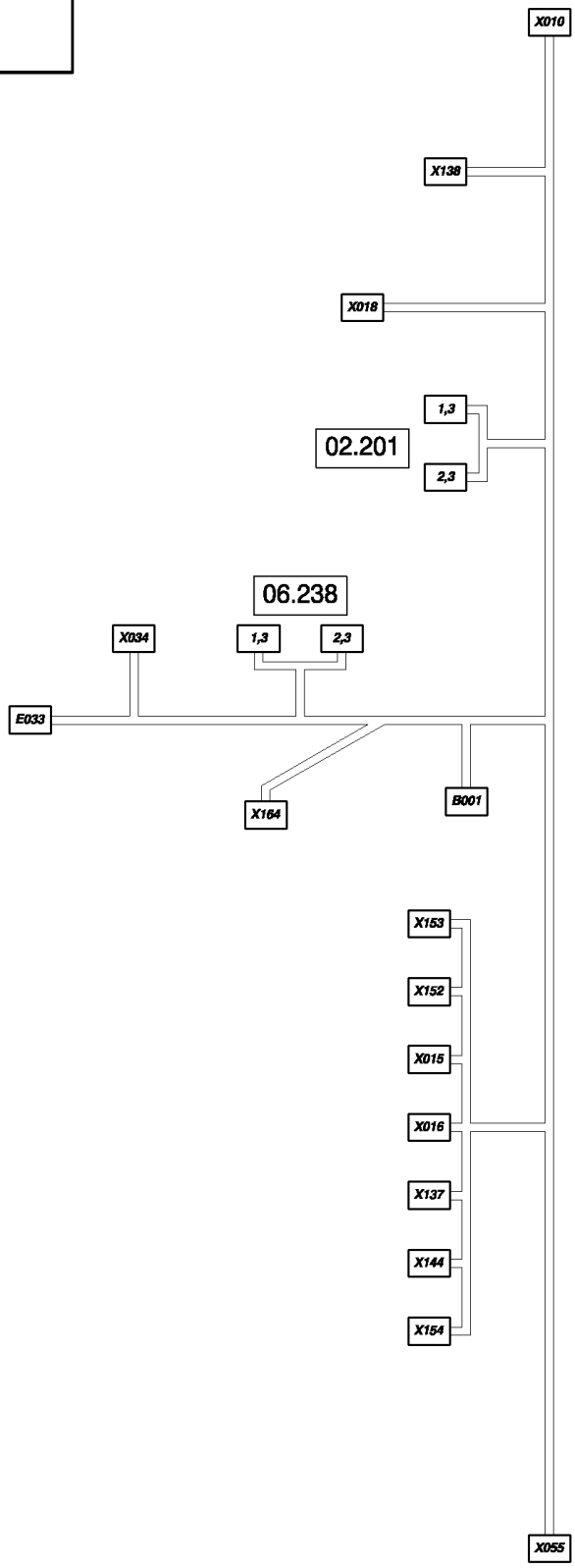

06.574(01) CABLE HARNESS : 84452210 - F364409

ссылка	Номер детали	Кол-во	Описание
1	441166		TERMINAL, {PP:80441166}
2	441167		TERMINAL, {PP:80441167}
3	441159		CONNECTOR, WIRE, {PP:80441159}
B001334787			CONNECTOR, HYD., B1
E033430026			TERMINAL, E33
X01084807217			CONNECTOR, WIRE, X10
	84441874		CONNECTOR, WIRE,
	84807680		TAB, LOCKING,
	86500035		TERMINAL,
	84074628		CABLE TERMINAL,
X01584806311			CONNECTOR, WIRE, X15
	84806208		CONNECTOR, WIRE,
	86500036		PIN, ELECT TERMINAL,
	84806312		CONNECTOR, WIRE,
X01684806311			CONNECTOR, WIRE, X16
	84806208		CONNECTOR, WIRE,
	86500036		PIN, ELECT TERMINAL,
	84806312		CONNECTOR, WIRE,
X01884806457			CONNECTOR, WIRE, X18
	84806460		CABLE TERMINAL,
	84100538		CONNECTOR, WIRE,
	84806458		CONNECTOR, WIRE,
X03484074635			CONNECTOR, WIRE, X34
	86500036		PIN, ELECT TERMINAL,
	84074639		CONNECTOR, WIRE,
X05584074631			CONNECTOR, WIRE, X55
	86500036		PIN, ELECT TERMINAL,
	84074638		PLUG,
X065441159			CONNECTOR, WIRE, X65
	441166		TERMINAL, {PP:80441166}
	441167		TERMINAL, {PP:80441167}
X13784806311			CONNECTOR, WIRE, X137
	84806208		CONNECTOR, WIRE,
	86500036		PIN, ELECT TERMINAL,
	84806312		CONNECTOR, WIRE,
X13884074631			CONNECTOR, WIRE, X138
	86500036		PIN, ELECT TERMINAL,
	84074638		PLUG,
X14484806311			CONNECTOR, WIRE, X144
	84806208		CONNECTOR, WIRE,
	86500036		PIN, ELECT TERMINAL,
	84806312		CONNECTOR, WIRE,
X15284074631			CONNECTOR, WIRE, X152
	86500036		PIN, ELECT TERMINAL,
	84074638		PLUG,

06.574(01) CABLE HARNESS : 84452210 - F364409

ссылка	Номер детали	Кол-во	Описание
X15	384074631		CONNECTOR, WIRE, X153
	86500036		PIN, ELECT TERMINAL,
	84074638		PLUG,
X15	484806311		CONNECTOR, WIRE, X154
	84806208		CONNECTOR, WIRE,
	86500036		PIN, ELECT TERMINAL,
	84806312		CONNECTOR, WIRE,
X16	484074631		CONNECTOR, WIRE, X164
	86500036		PIN, ELECT TERMINAL,
	84074638		PLUG,

06.574(02) CABLE HARNESS : 84457661 - D410

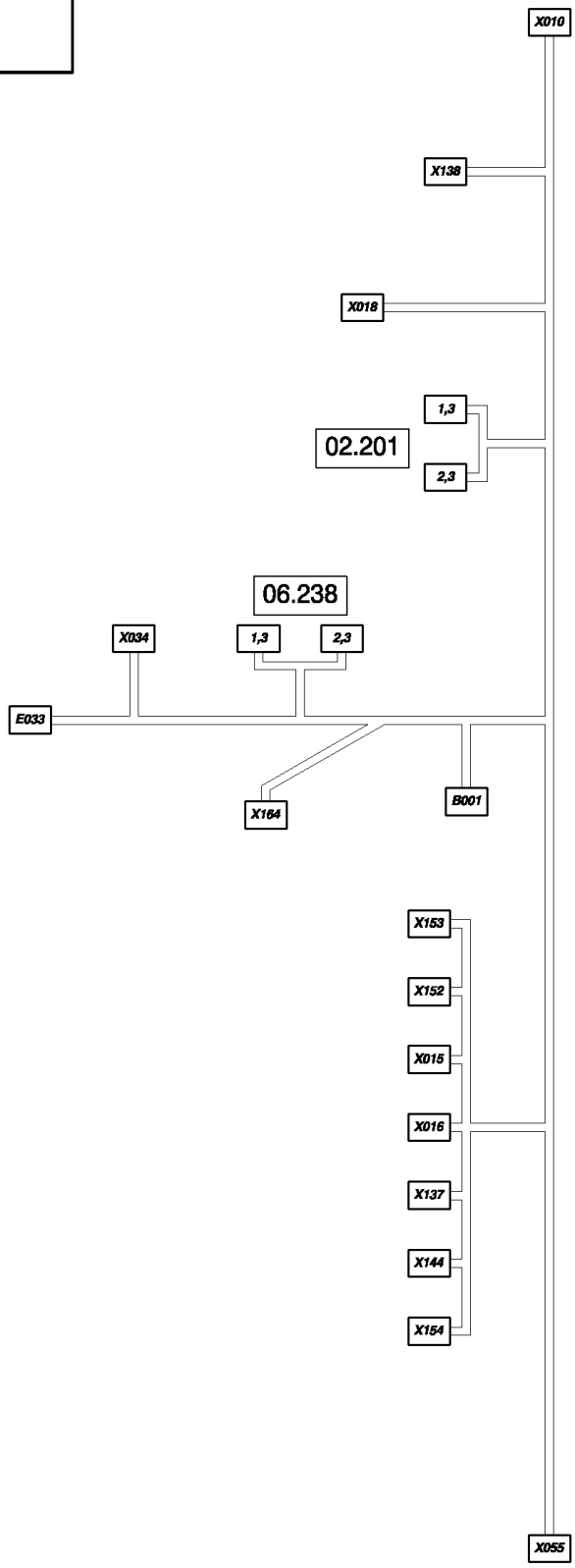

06.574(02) CABLE HARNESS : 84457661 - D410

ссылка	Номер детали	Кол-во	Описание
1	441166		TERMINAL, {PP:80441166}
2	441167		TERMINAL, {PP:80441167}
3	441159		CONNECTOR, WIRE, {PP:80441159}
B001334787			CONNECTOR, HYD., B1
E033430026			TERMINAL, E33
X01084807217			CONNECTOR, WIRE, X10
	84441874		CONNECTOR, WIRE,
	84807680		TAB, LOCKING,
	86500035		TERMINAL,
	84074628		CABLE TERMINAL,
X01584806311			CONNECTOR, WIRE, X15
	84806208		CONNECTOR, WIRE,
	86500036		PIN, ELECT TERMINAL,
	84806312		CONNECTOR, WIRE,
X01684806311			CONNECTOR, WIRE, X16
	84806208		CONNECTOR, WIRE,
	86500036		PIN, ELECT TERMINAL,
	84806312		CONNECTOR, WIRE,
X01884806457			CONNECTOR, WIRE, X18
	84806460		CABLE TERMINAL,
	84100538		CONNECTOR, WIRE,
	84806458		CONNECTOR, WIRE,
X03484074635			CONNECTOR, WIRE, X34
	86500036		PIN, ELECT TERMINAL,
	84074639		CONNECTOR, WIRE,
X05584074631			CONNECTOR, WIRE, X55
	86500036		PIN, ELECT TERMINAL,
	84074638		PLUG,
X065441159			CONNECTOR, WIRE, X65
	441166		TERMINAL, {PP:80441166}
	441167		TERMINAL, {PP:80441167}
X13784806311			CONNECTOR, WIRE, X137
	84806208		CONNECTOR, WIRE,
	86500036		PIN, ELECT TERMINAL,
	84806312		CONNECTOR, WIRE,
X13884074631			CONNECTOR, WIRE, X138
	86500036		PIN, ELECT TERMINAL,
	84074638		PLUG,
X14484806311			CONNECTOR, WIRE, X144
	84806208		CONNECTOR, WIRE,
	86500036		PIN, ELECT TERMINAL,
	84806312		CONNECTOR, WIRE,
X15284074631			CONNECTOR, WIRE, X152
	86500036		PIN, ELECT TERMINAL,
	84074638		PLUG,

06.574(02) CABLE HARNESS : 84457661 - D410

ссылка	Номер детали	Кол-во	Описание
X15	384074631		CONNECTOR, WIRE, X153
	86500036		PIN, ELECT TERMINAL,
	84074638		PLUG,
X15	484806311		CONNECTOR, WIRE, X154
	84806208		CONNECTOR, WIRE,
	86500036		PIN, ELECT TERMINAL,
	84806312		CONNECTOR, WIRE,
X16	484074631		CONNECTOR, WIRE, X164
	86500036		PIN, ELECT TERMINAL,
	84074638		PLUG,

06.701(01) CONNECTORS FOR COMPONENTS

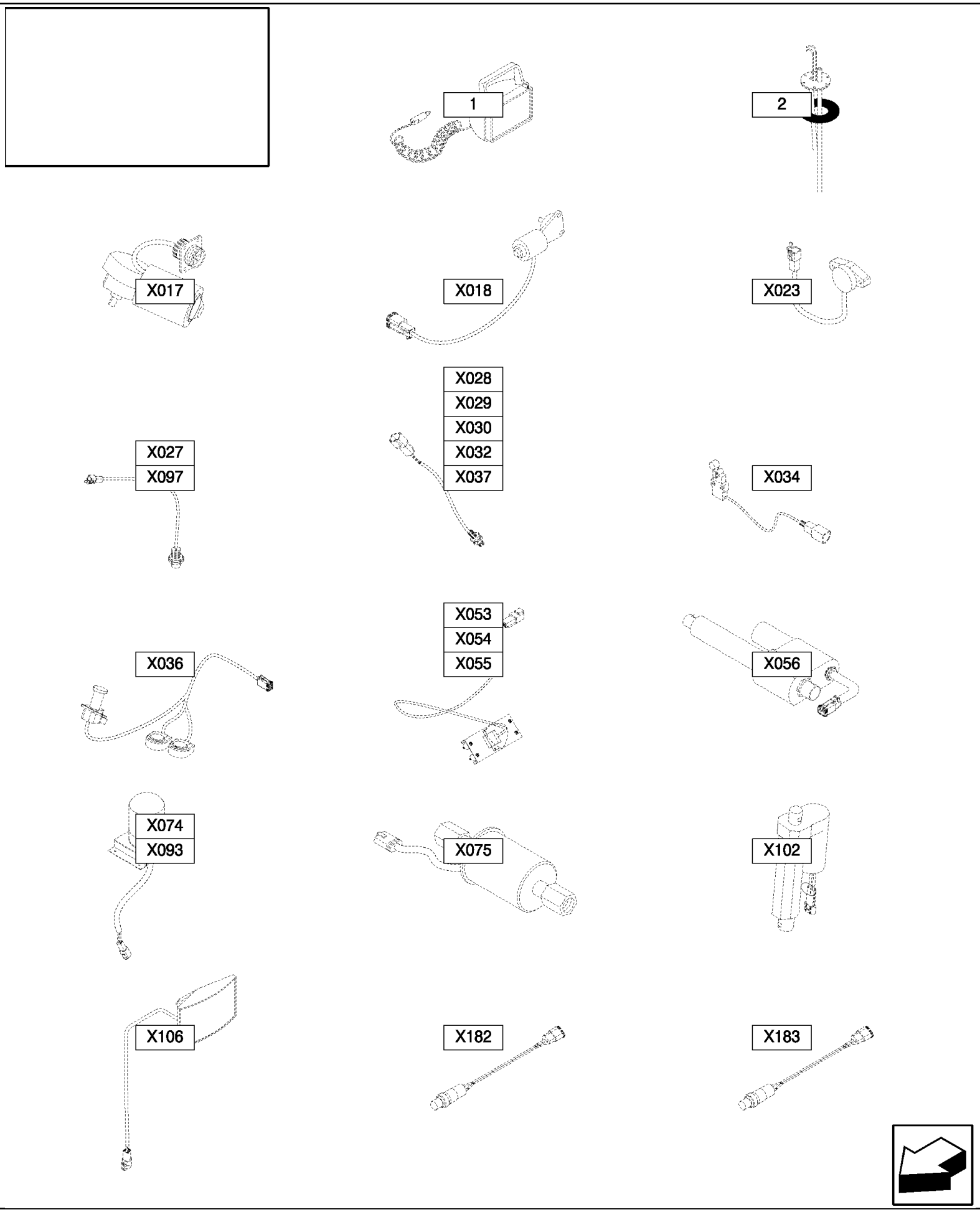

06.701(01) CONNECTORS FOR COMPONENTS

сылка	Номер детали	Кол-во	Описание
1	350674		CONNECTOR, WIRE, {PP:80350674}
	430026		TERMINAL, {PP:80430026}
2	84074630		CONNECTOR, WIRE,
	86500166		PLUG,
X017445746			CONNECTOR, WIRE, X17
	80445526		COLLAR,
	445517		TERMINAL, {PP:80445517}
X01884806458			CONNECTOR, WIRE, X18
X02384074632			CONNECTOR, WIRE, X23
	86500035		TERMINAL,
	9611173		PLUG, {PP:89611173}
X02784074630			CONNECTOR, WIRE, X27
	86500035		TERMINAL,
	86500166		PLUG,
X02884074630			CONNECTOR, WIRE, X28
	86500035		TERMINAL,
	86500166		PLUG,
X02984074630			CONNECTOR, WIRE, X29
	86500035		TERMINAL,
	86500166		PLUG,
X03084074630			CONNECTOR, WIRE, X30
	86500035		TERMINAL,
	86500166		PLUG,
X03284074630			CONNECTOR, WIRE, X32
	86500035		TERMINAL,
	86500166		PLUG,
X03484074632			CONNECTOR, WIRE, X34
	86500035		TERMINAL,
	9611173		PLUG, {PP:89611173}
X03684074642			CONNECTOR, WIRE, X36
	84068583		PLUG,
	86500035		TERMINAL,
	89861378		PLUG,
X03784074630			CONNECTOR, WIRE, X37
	86500035		TERMINAL,
	86500166		PLUG,
X05384074630			CONNECTOR, WIRE, X53
	86500035		TERMINAL,
	86500166		PLUG,
X05484074630			CONNECTOR, WIRE, X54
	86500035		TERMINAL,
	86500166		PLUG,
X05584074630			CONNECTOR, WIRE, X55
	86500035		TERMINAL,
	86500166		PLUG,

06.701(01) CONNECTORS FOR COMPONENTS

сылка	Номер детали	Кол-во	Описание
X056916790			CONNECTOR, WIRE, X56
	445521		TERMINAL, {PP:80445521}
	9516242		TERMINAL, {PP:89516242}
	916797		GASKET, {PP:80916797}
X07484074630			CONNECTOR, WIRE, X74
	86500035		TERMINAL,
	86500167		
X07584100538			CONNECTOR, WIRE, X75
X09384074630			CONNECTOR, WIRE, X93
	86500035		TERMINAL,
	86500167		
X09784074630			CONNECTOR, WIRE, X97
	86500035		TERMINAL,
	86500166		PLUG,
X10284100538			CONNECTOR, WIRE, X102
	84806458		CONNECTOR, WIRE,
X10684074632			CONNECTOR, WIRE, X106
	900363		TERMINAL, {PP:80900363}
	9611173		PLUG, {PP:89611173}
X18284074635			CONNECTOR, WIRE, X182
	84068583		PLUG,
	86500036		PIN, ELECT TERMINAL,
	84074639		CONNECTOR, WIRE,
X18384074635			CONNECTOR, WIRE, X183
	84068583		PLUG,
	86500036		PIN, ELECT TERMINAL,
	84074639		CONNECTOR, WIRE,

06.801(01) CONNECTORS - FROM 80334588 TO 80445521

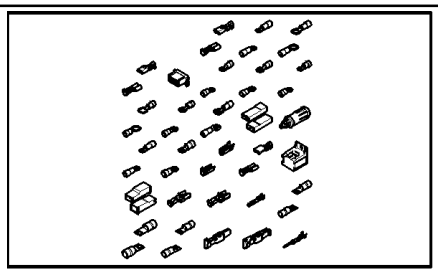

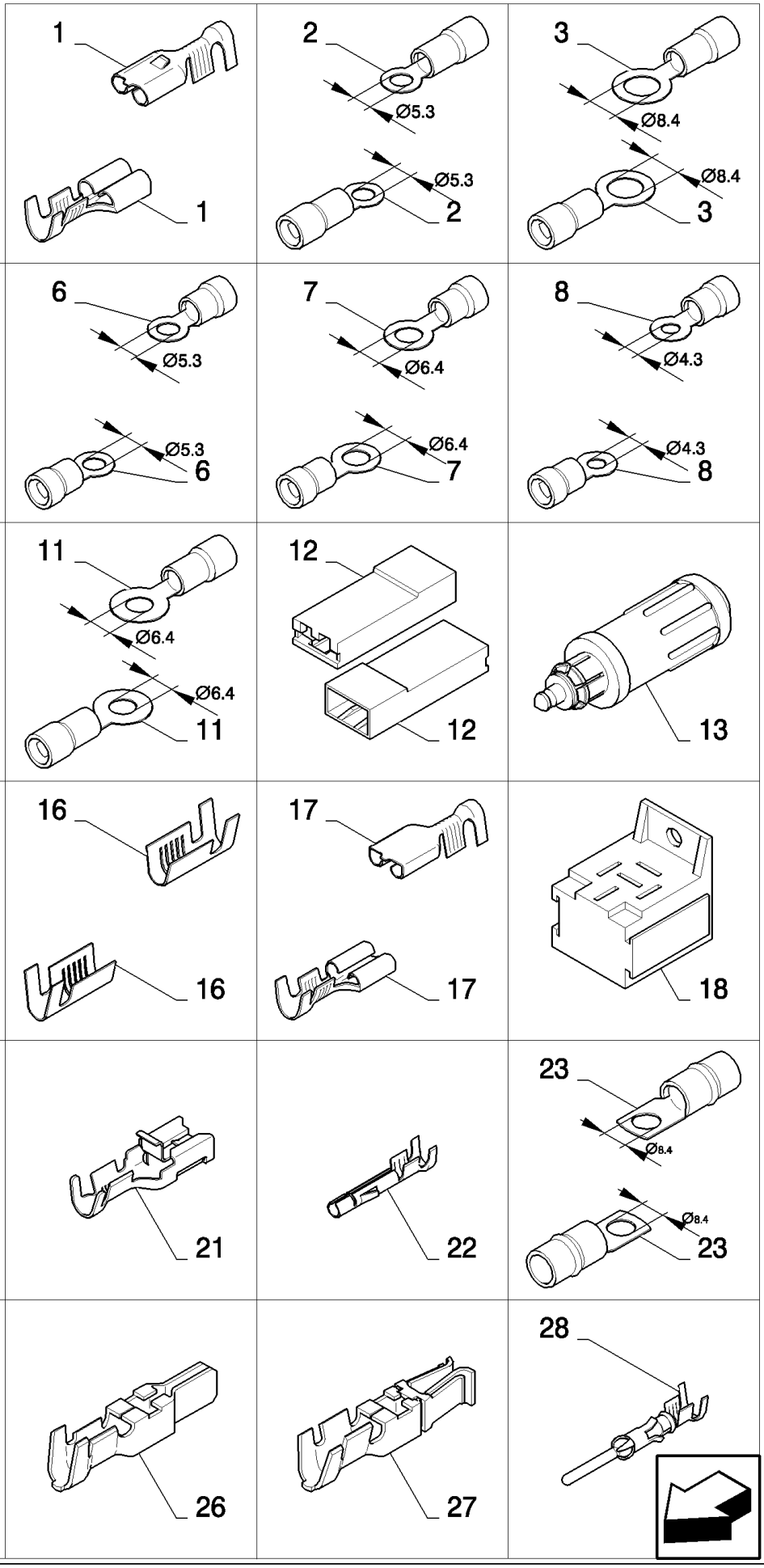

06.801(01) CONNECTORS - FROM 80334588 TO 80445521

ссылка	Номер детали	Кол-во	Описание
1	334588	AR	TERMINAL, {PP:80334588} 1-2.5MMI
2	80334591	AR	TERMINAL, 4-6MMI
3	80334592	AR	TERMINAL, 4-6MMI
4	334594	AR	TERMINAL, {PP:80334594} 4-6MMI
5	334595	AR	TERMINAL, {PP:80334595}
6	334787	AR	CONNECTOR, HYD., {PP:80334787} 1.5-2.5MMI
7	335316	AR	TERMINAL, {PP:80335316} 0.3-1.3MMI
8	80335480	AR	TERMINAL, 1.5-2.5MMI
9	335481	AR	TERMINAL, {PP:80335481} 1.5-2.5MMI
10	335482	AR	TERMINAL, {PP:80335482} 1.5-2.5MMI
11	335483	AR	TERMINAL, {PP:80335483} 4-6MMI
12	350674	AR	CONNECTOR, WIRE, {PP:80350674}
13	353969	AR	CONNECTOR, ELEC, {PP:80353969}
14	80354118	AR	TERMINAL, 4-6MMI
15	80357472	AR	TERMINAL, 0.3-1.3MMI
16	426199	AR	TERMINAL, {PP:80426199} 1.5-2.5MMI
17	430026	AR	TERMINAL, {PP:80430026} 1.5-2.5MMI
18	439588	AR	SUPPORT, {PP:80439588}
19	441159	AR	CONNECTOR, WIRE, {PP:80441159}
20	441166	AR	TERMINAL, {PP:80441166} 0.7-2MMI
21	441167	AR	TERMINAL, {PP:80441167} 2.5-4MMI
22	442243	AR	CONNECTOR, ELEC, {PP:80442243} 0.5-2.1MMI
23	80444851	AR	TERMINAL, 16-20MMI
24	80444852	AR	TERMINAL, 16-20MMI
25	80444853	AR	CABLE TERMINAL, 16-20MMI
26	445517	AR	TERMINAL, {PP:80445517} 1.5-4MMI
27	445518	AR	TERMINAL, {PP:80445518} 5-8MMI
28	445521	AR	TERMINAL, {PP:80445521} 1-2.5MMI

06.801(02) CONNECTORS - FROM 80445522 TO 84058194

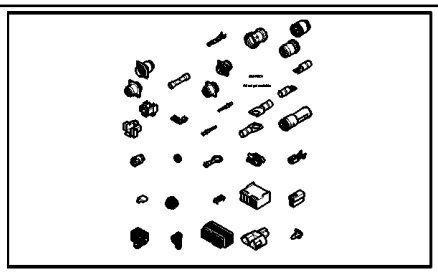

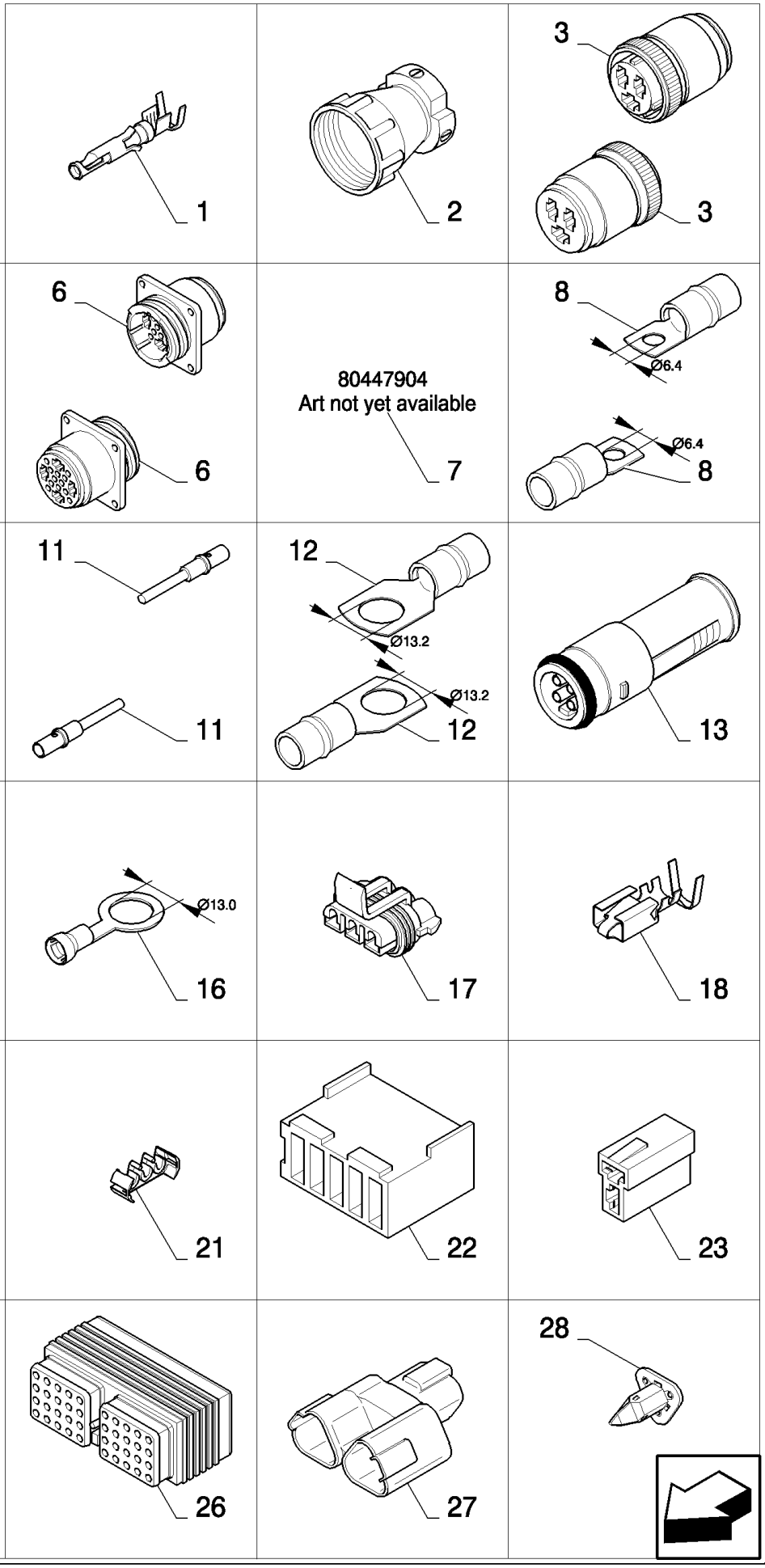

06.801(02) CONNECTORS - FROM 80445522 TO 84058194

ссылка	Номер детали	Кол-во	Описание
1	445522	AR	TERMINAL, {PP:80445522} 1-2.5MMI
2	80445526	AR	COLLAR,
3	80445745	AR	CONNECTOR, WIRE,
4	445746	AR	CONNECTOR, WIRE, {PP:80445746}
5	80446236	AR	CABLE TERMINAL, 0.5-1.5MMI
6	447569	AR	CONNECTOR, WIRE, {PP:80447569}
7	80447904	AR	CONNECTOR, WIRE,
8	455780	AR	TERMINAL, {PP:80455780} 16-20MMI
9	751307	AR	TERMINAL, {PP:80751307}
10	751308	AR	TERMINAL, {PP:80751308}
11	900363	AR	TERMINAL, {PP:80900363} 0.8-1MMI
12	80916171	AR	CABLE TERMINAL, 16-20MMI
13	916790	AR	CONNECTOR, WIRE, {PP:80916790} 4P-M
14	916791	AR	CONNECTOR, WIRE, {PP:80916791} 4P-V
15	916797	AR	GASKET, {PP:80916797}
16	80919749	AR	CABLE TERMINAL, 2.5-6MMI
17	84000181	AR	TERMINAL,
18	84000182	AR	TERMINAL, 1-2MMI
19	84004134	AR	TERMINAL,
20	84004255	AR	SEAL, 2.81-3.75MMI
21	84004256	AR	CLAMP,
22	84007631	AR	TERMINAL,
23	84015523	AR	CONNECTOR, ELEC,
24	84019407	AR	CONNECTOR, HYD.,
25	84038072	AR	CABLE,
26	84058011	AR	CONNECTOR, WIRE,
27	84058188	AR	CONNECTOR, WIRE,
28	84058194	AR	PLUG,

06.801(03) CONNECTORS - FROM 84068583 TO 84400774

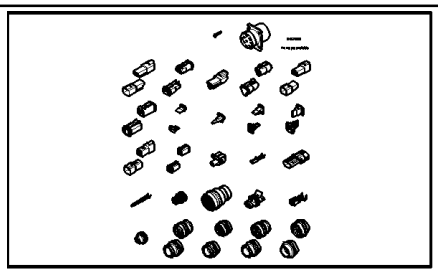

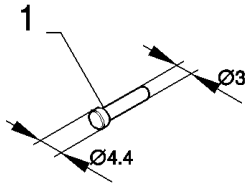

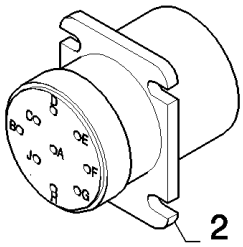

84074628
Art not yet available
3

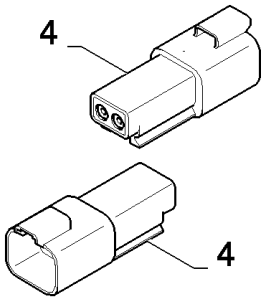

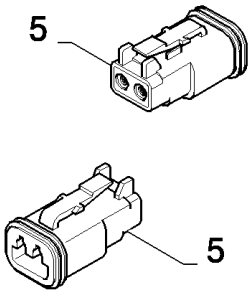

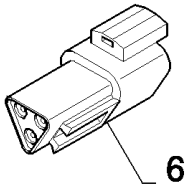

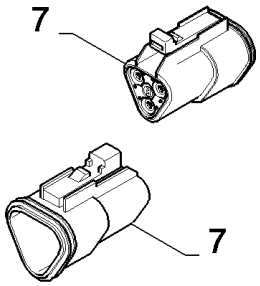

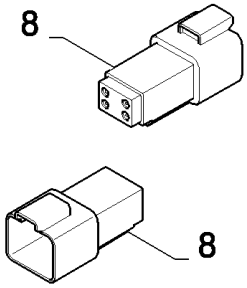

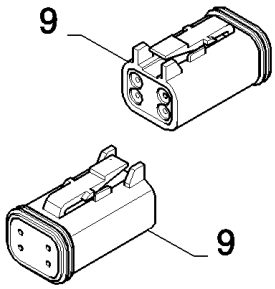

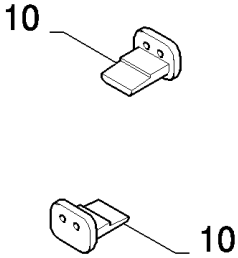

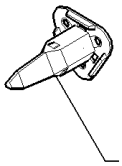

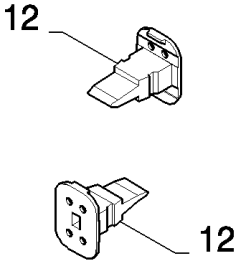

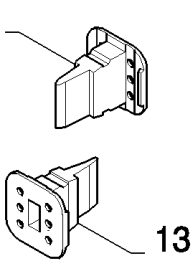

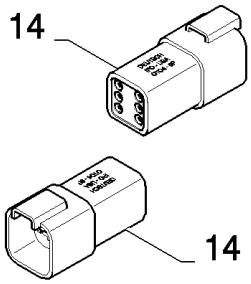

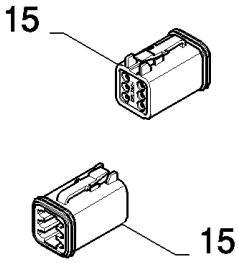

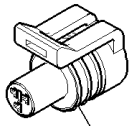

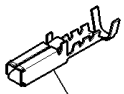

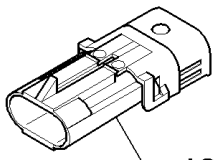

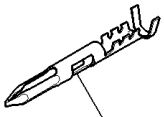

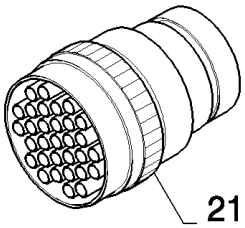

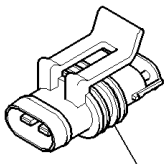

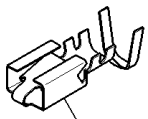

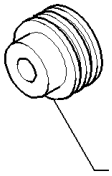

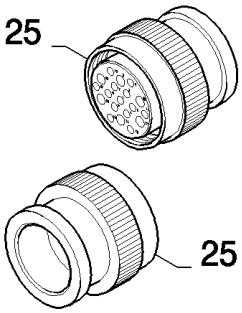

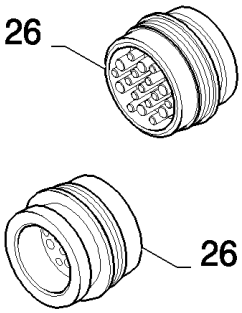

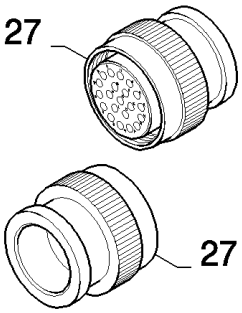

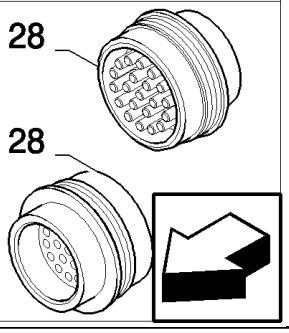

CS660 COMBINE BASE UNIT (1/03-) - Electrical System

06.801(03) CONNECTORS - FROM 84068583 TO 84400774

ссылка	Номер детали	Кол-во	Описание
1	84068583	AR	PLUG,
2	84074254	AR	CONNECTOR, WIRE,
3	84074628	AR	CABLE TERMINAL,
4	84074630	AR	CONNECTOR, WIRE, 0.82-1.31MMI
5	84074631	AR	CONNECTOR, WIRE,
6	84074632	AR	CONNECTOR, WIRE,
7	84074635	AR	CONNECTOR, WIRE,
8	84074636	AR	CONNECTOR, WIRE,
9	84074637	AR	CONNECTOR, WIRE,
10	84074638	AR	PLUG,
11	84074639	AR	CONNECTOR, WIRE,
12	84074640	AR	PLUG,
13	84074641	AR	PLUG,
14	84074642	AR	CONNECTOR, WIRE,
15	84074643	AR	CONNECTOR, WIRE,
16	84078681	AR	CONNECTOR, WIRE, 2.03-2.4MMI
17	84078682	AR	TERMINAL, 0.8-1MMI
18	84100536	AR	CONNECTOR, WIRE,
19	84100537	AR	TERMINAL, 1-2MMI
20	84100538	AR	CONNECTOR, WIRE, 3.49-2.81MMI
21	84320884	AR	CONNECTOR, WIRE,
22	84400439	AR	CONNECTOR, WIRE,
23	84400440	AR	CONNECTOR, WIRE,
24	84400441	AR	PLUG,
25	84400771	AR	CONNECTOR, WIRE,
26	84400772	AR	CONNECTOR, WIRE,
27	84400773	AR	CONNECTOR, WIRE,
28	84400774	AR	CONNECTOR, WIRE,

06.801(04) CONNECTORS - FROM 84400775 TO 84806918

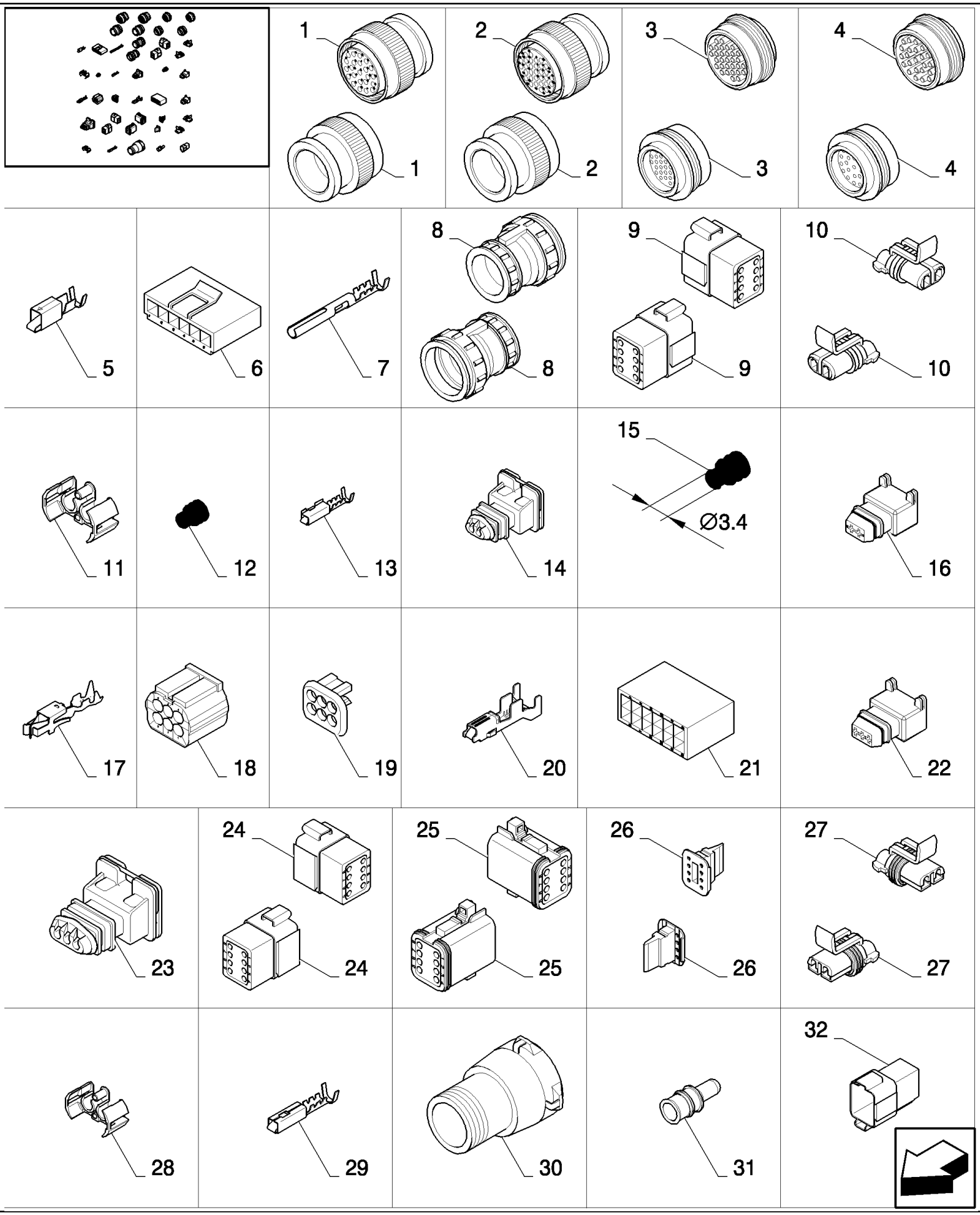

CS660 COMBINE BASE UNIT (1/03-) - Electrical System

06.801(04) CONNECTORS - FROM 84400775 TO 84806918

ссылка	Номер детали	Кол-во	Описание
1	84400775	AR	CONNECTOR, WIRE,
2	84400776	AR	CONNECTOR, WIRE,
3	84400777	AR	TAB, LOCKING,
4	84400780	AR	CONNECTOR, WIRE,
5	84439475	AR	CONNECTOR, WIRE,
6	84439476	AR	CONNECTOR, WIRE,
7	84441696	AR	CONNECTOR, WIRE, 1-2MMI
8	84441874	AR	CONNECTOR, WIRE,
9	84449647	AR	CONNECTOR, WIRE,
10	84457868	AR	CONNECTOR, WIRE,
11	84457870	AR	PLUG,
12	84457871	AR	SEAL,
13	84457872	AR	CABLE TERMINAL,
14	84607213	AR	CONNECTOR, WIRE,
15	84607242	AR	SEAL,
16	84607243	AR	CONNECTOR, WIRE,
17	84607244	AR	TERMINAL,
18	84607372	AR	CONNECTOR, WIRE,
19	84607373	AR	STOP DEVICE,
20	84607374	AR	CONNECTOR, WIRE,
21	84607379	AR	CONNECTOR, WIRE,
22	84806090	AR	CONNECTOR, WIRE,
23	84806091	AR	CONNECTOR, WIRE,
24	84806208	AR	CONNECTOR, WIRE,
25	84806311	AR	CONNECTOR, WIRE,
26	84806312	AR	CONNECTOR, WIRE,
27	84806457	AR	CONNECTOR, WIRE,
28	84806458	AR	CONNECTOR, WIRE,
29	84806460	AR	CABLE TERMINAL, 2-3MMI
30	84806654	AR	CONNECTOR, WIRE,
31	84806656	AR	CABLE TERMINAL,
32	84806918	AR	CONNECTOR, WIRE,

06.801(05) CONNECTORS - FROM 84806919 TO 84814865

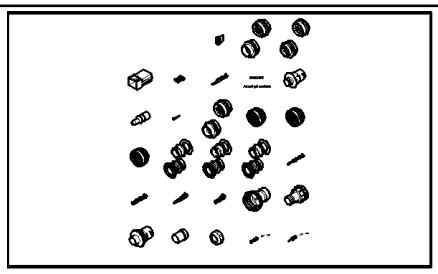

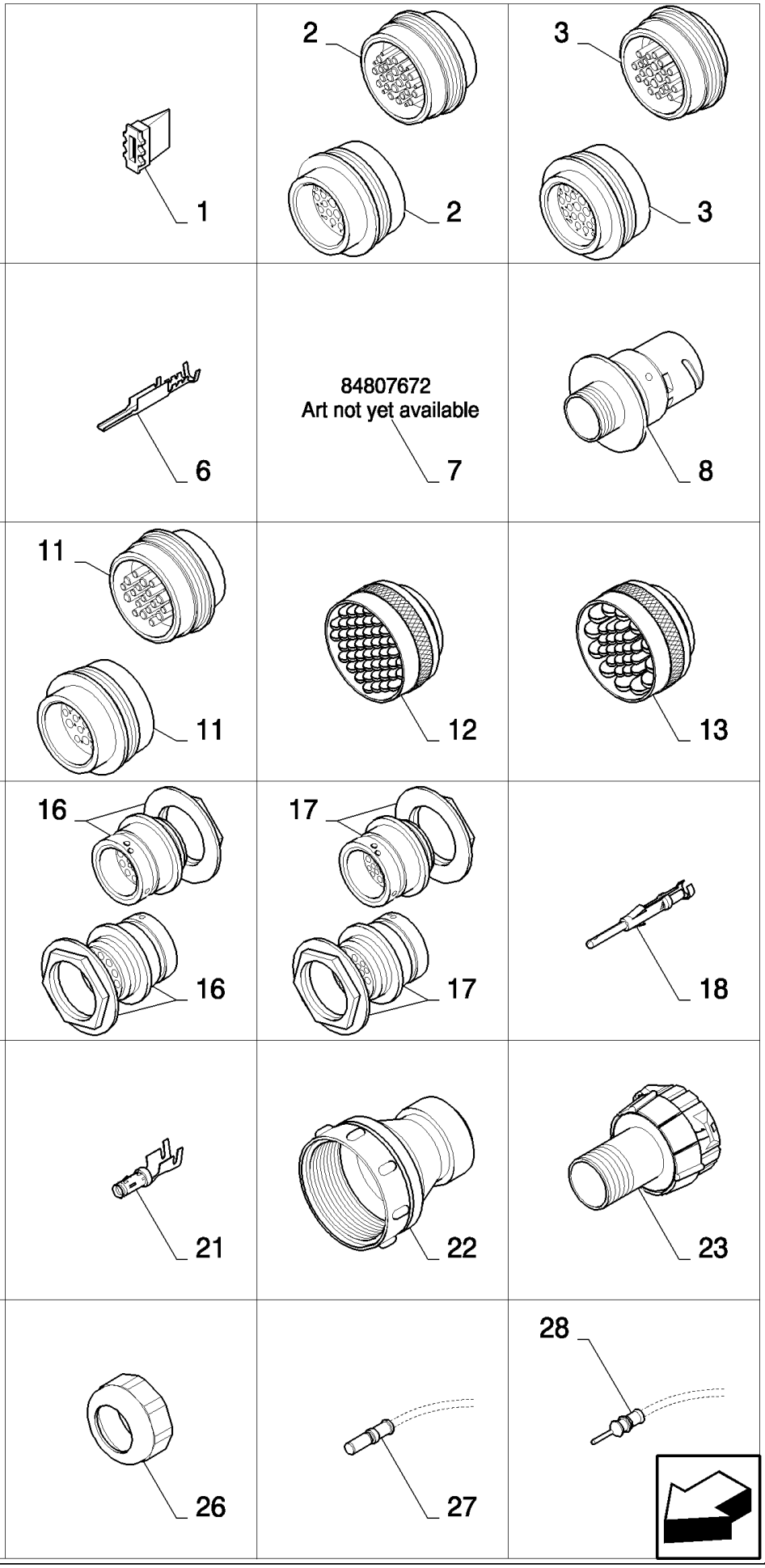

CS660 COMBINE BASE UNIT (1/03-) - Electrical System

06.801(05) CONNECTORS - FROM 84806919 TO 84814865

ссылка	Номер детали	Кол-во	Описание
1	84806919	AR	PLUG,
2	84807216	AR	CONNECTOR, WIRE,
3	84807217	AR	CONNECTOR, WIRE,
4	84807268	AR	CONNECTOR, WIRE,
5	84807269	AR	CONNECTOR, WIRE,
6	84807270	AR	CABLE TERMINAL, 0.8-1MMI
7	84807672	AR	CABLE TERMINAL,
8	84807676	AR	CONNECTOR, WIRE,
9	84807678	AR	CABLE TERMINAL,
10	84807680	AR	TAB, LOCKING,
11	84814753	AR	CONNECTOR, WIRE,
12	84814754	AR	CONNECTOR, WIRE,
13	84814755	AR	CONNECTOR, WIRE,
14	84814756	AR	CONNECTOR, WIRE,
15	84814757	AR	CONNECTOR, WIRE,
16	84814758	AR	CONNECTOR, WIRE,
17	84814759	AR	CONNECTOR, WIRE,
18	84814761	AR	CABLE TERMINAL,
19	84814762	AR	CABLE TERMINAL,
20	84814763	AR	CABLE TERMINAL, 1.5-2.5MMI
21	84814764	AR	CABLE TERMINAL,
22	84814765	AR	ADAPTER,
23	84814773	AR	CONNECTOR, WIRE,
24	84814774	AR	CONNECTOR, WIRE,
25	84814862	AR	CONNECTOR, WIRE,
26	84814863	AR	CONNECTOR, WIRE,
27	84814864	AR	CABLE TERMINAL,
28	84814865	AR	CABLE TERMINAL,

06.801(06) CONNECTORS - FROM 84814866 TO 89818033

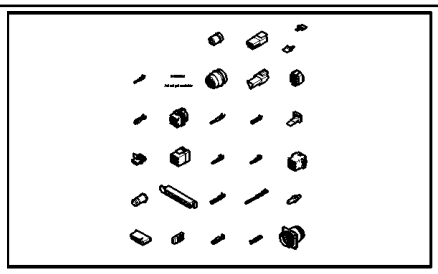

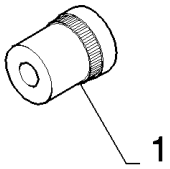

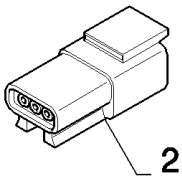

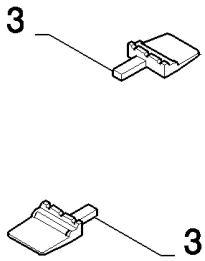

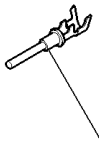

84818184
Art not yet available

5

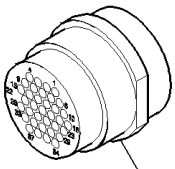

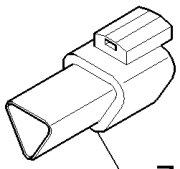

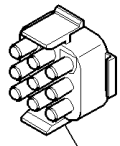

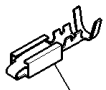

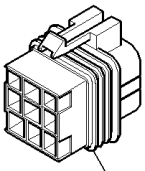

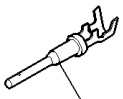

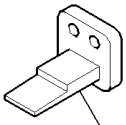

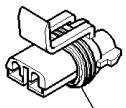

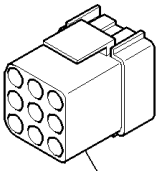

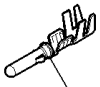

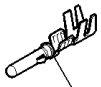

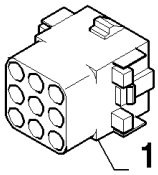

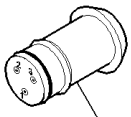

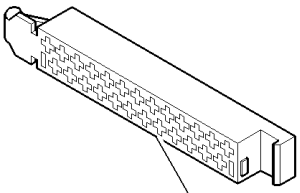

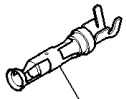

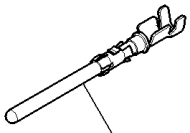

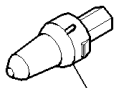

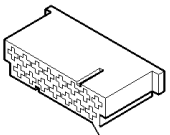

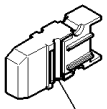

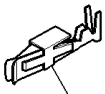

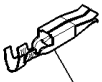

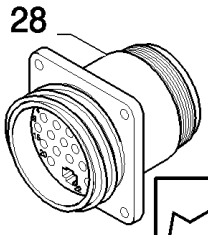

CS660 COMBINE BASE UNIT (1/03-) - Electrical System

06.801(06) CONNECTORS - FROM 84814866 TO 89818033

ссылка	Номер детали	Кол-во	Описание
1	84814866	AR	CONNECTOR, WIRE,
2	84817101	AR	CONNECTOR, WIRE,
3	84817102	AR	TAB, LOCKING,
4	84817103	AR	CABLE TERMINAL, 0.8-1MMI
5	84818184	AR	CABLE TERMINAL,
6	84818192	AR	CONNECTOR, ELEC,
7	84818205	AR	CONNECTOR, WIRE,
8	84818419	AR	CONNECTOR, WIRE,
9	84819793	AR	CABLE TERMINAL, 1-2MMI
10	84819794	AR	CONNECTOR, WIRE,
11	86500035	AR	TERMINAL, 0.82-1.31MMI
12	86500036	AR	PIN, ELECT TERMINAL, 0.8-1MMI
13	86500166	AR	PLUG,
14	86611284	AR	CONNECTOR, WIRE,
15	89505300	AR	LINK, CONNECTING,
16	89506052	AR	CABLE, 0.5-2MMI
17	89506053	AR	TERMINAL, 2.1-4MMI
18	9509740	AR	CONNECTOR, ELEC, {PP:89509740}
19	9510662	AR	CONNECTOR, WIRE, {PP:89510662} 2.3-3MMI
20	9510666	AR	CONNECTOR, WIRE, {PP:89510666}
21	9513123	AR	TERMINAL, {PP:89513123} 0.5-1.5MMI
22	9516242	AR	TERMINAL, {PP:89516242} 0.5-1.5MMI
23	9611173	AR	PLUG, {PP:89611173}
24	9811261	AR	CONNECTOR, ELEC, {PP:89811261}
25	9811772	AR	FUSE HOLDER, {PP:89811772}
26	9813989	AR	TERMINAL, {PP:89813989} 1-2.5MMI
27	9815256	AR	CONNECTOR, ELEC, {PP:89815256} 0.5-1.5MMI
28	9818033	AR	CONNECTOR, WIRE, {PP:89818033}

06.801(07) CONNECTORS - FROM 89818548 TO 89861378

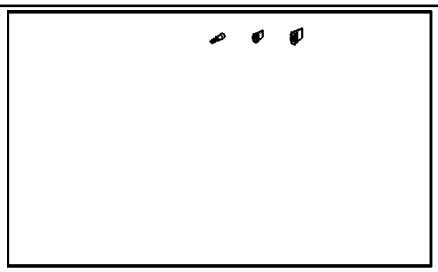

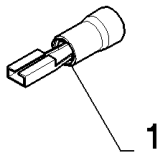

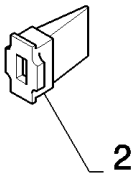

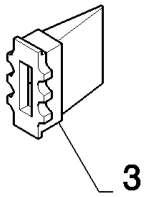

CS660 COMBINE BASE UNIT (1/03-) - Electrical System

06.801(07) CONNECTORS - FROM 89818548 TO 89861378

ссылка	Номер детали	Кол-во	Описание
1	9818548	AR	TERMINAL, {PP:89818548} 0.3-1.5MMI
2	9861376	AR	CONNECTOR, WIRE, {PP:89861376}
3	89861378	AR	PLUG,

HYDRAULIC SYSTEMS	**INSTALLATION HYDRAULIQUE**	**INSTALACIÓN HIDRÁULICA**	**HYDRAULIKANLÆG**
IMPIANTO IDRAULICA	**HYDRAULISCHE ANLAGE**	**INSTÁLAÇION HIDRÁULICA**	**HYDRAULISCH SYSTEEM**

SEC. 7

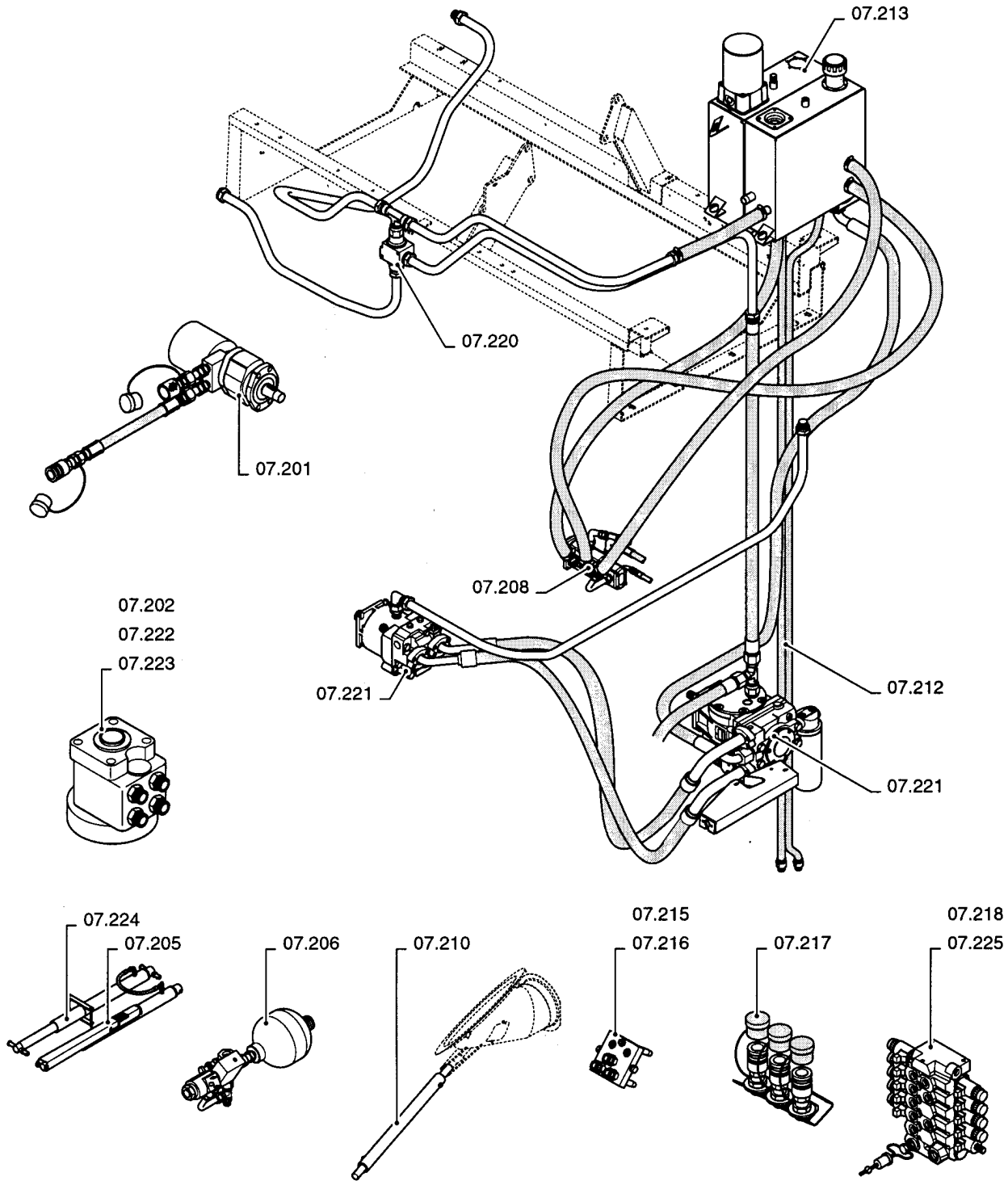

ссылка	Номер детали	Кол-во	Описание

HYDRAULIC SYSTEMS	INSTALLATION HYDRAULIQUE	INSTALACIÓN HIDRÁULICA	HYDRAULIKANLÆG
IMPIANTO IDRAULICA	HYDRAULISCHE ANLAGE	INSTÁLAÇION HIDRÁULICA	HYDRAULISCH SYSTEEM

SEC. 7

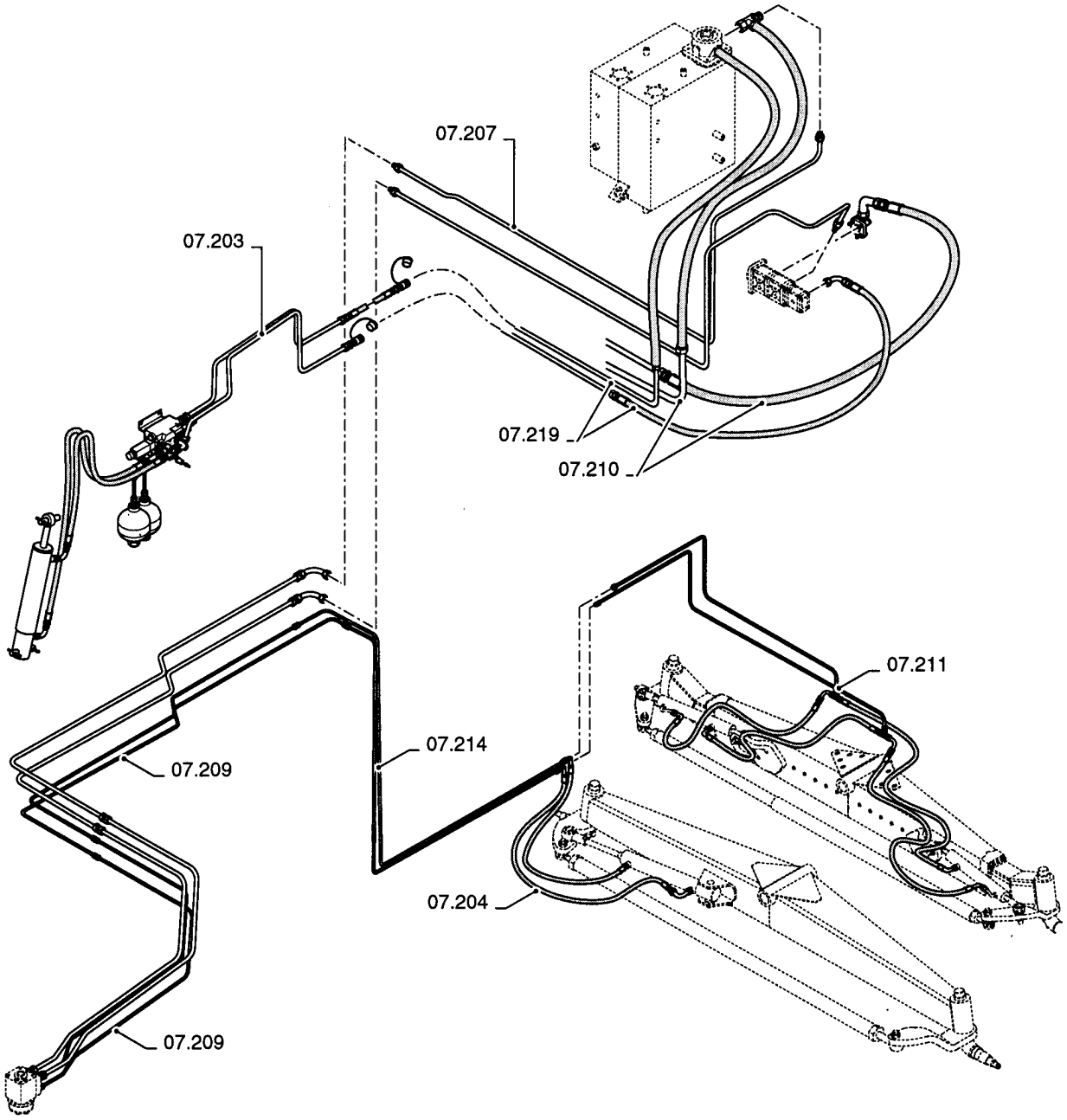

ссылка	Номер детали	Кол-во	Описание

07.201(01) HYDRAULIC DRIVEN REVERSING SYSTEM

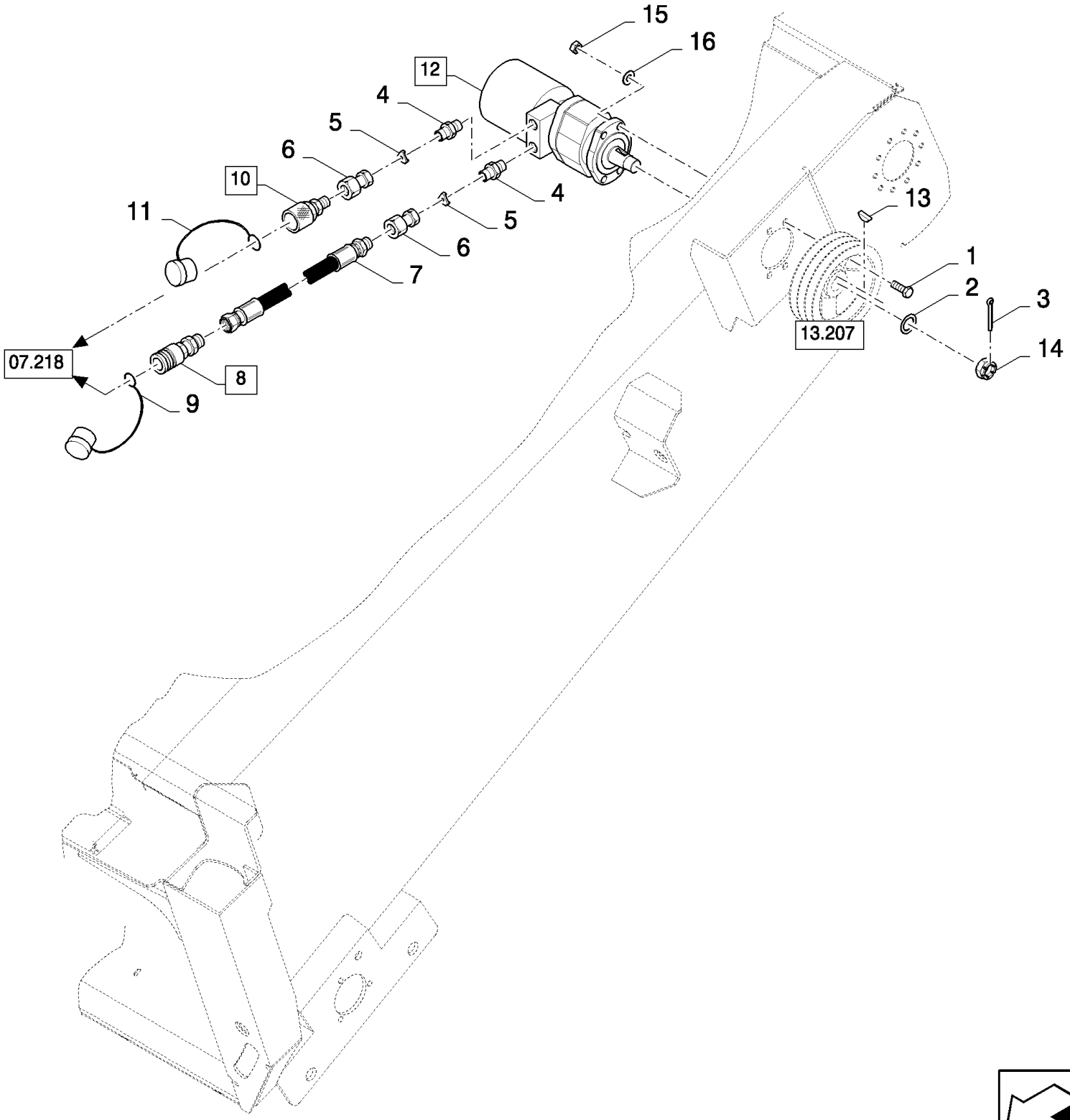

07.201(01) HYDRAULIC DRIVEN REVERSING SYSTEM

ссылка	Номер детали	Кол-во	Описание
1	87909	4	BOLT, Hex, 1/2"-13 x 1", G5, Full Thd,
2	26402	1	WASHER, {PP:80026402}
3	300416	1	PIN, SPLIT (COTTER), {PP:80300416} M4 x 50,
4	84437540	2	CONNECTOR, HYD.,
5	80420815	2	VALVE, RESTRICTOR,
6	84433372	2	CONNECTOR, HYD.,
7	9512067	1	HOSE, {PP:89512067}
8	457449	1	JOINT, UNIVERSAL, {PP:80457449} (9)
9	9508639	1	CAP, {PP:89508639}
10	457420	1	JOINT, UNIVERSAL, {PP:80457420} (11)
11	9508643	1	CAP, {PP:89508643}
12	84444687	1	REVERSER, (13,14)
13	NSS	1	NOT SERVICED SEPARATELY,
14	NSS	1	NOT SERVICED SEPARATELY,
15	140223	4	WASHER, {PP:80140223} M12
16	281038	4	WASHER, LOCK, {PP:80281038} Ext Tooth, 1/2", 12MM

07.202(01) STEERING VALVE - FOR ADJUSTABLE REAR AXLE

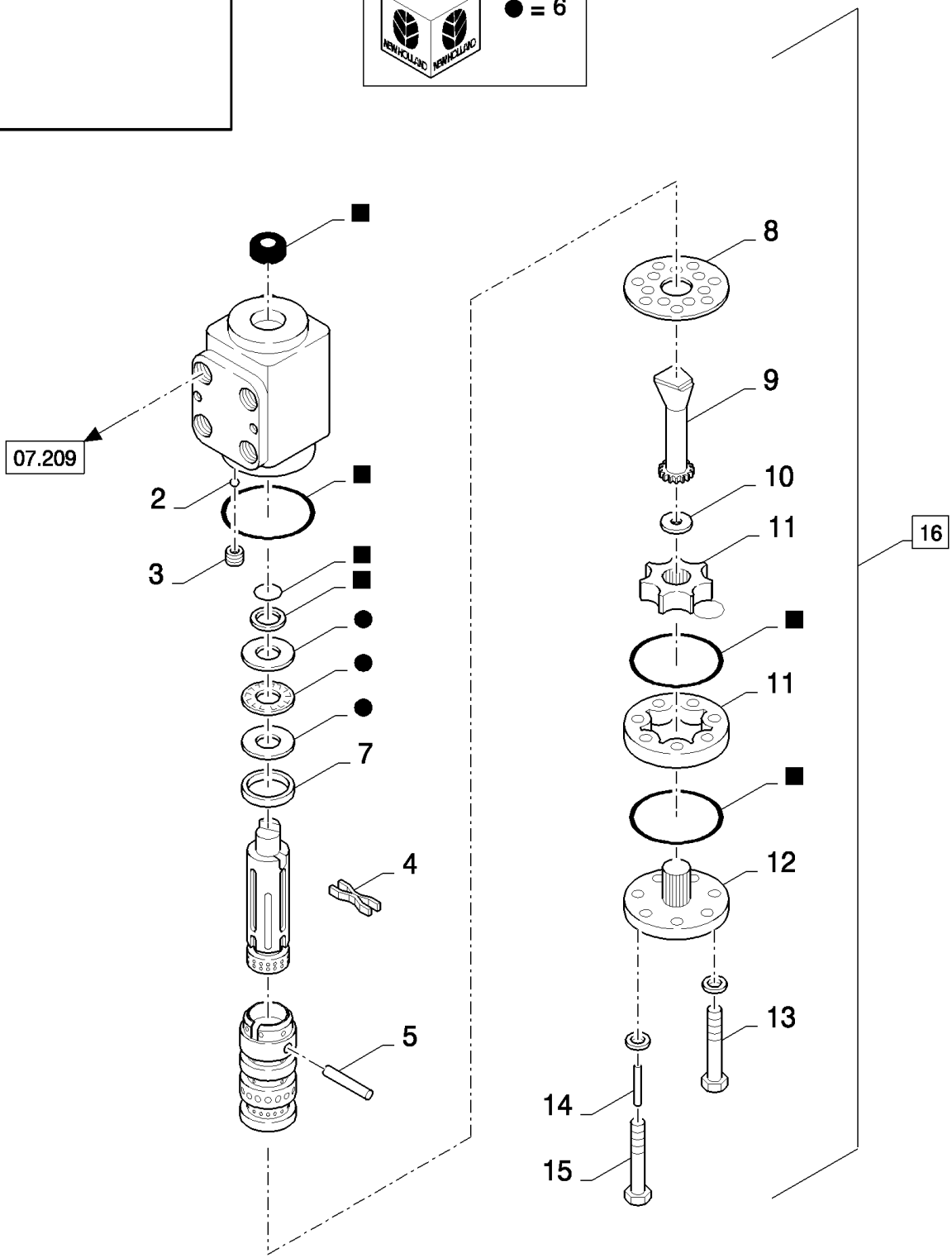

07.202(01) STEERING VALVE - FOR ADJUSTABLE REAR AXLE

ссылка	Номер детали	Кол-во	Описание
1	449243	1	KIT, SEALS, , BSN C423
1	84053469	1	KIT, SEALS, , ASN D424
2	326447	1	BALL, , BSN C423
3	326446	1	SCREW, , BSN C423
4	433273	6	SPRING, , BSN C423
5	394849	1	PIN, , BSN C423
6	449242	1	SET OF RINGS, , BSN C423
7	326432	1	RING, , BSN C423
8	326436	1	PLATE, COVER, , BSN C423
9	449241	1	SHAFT, , BSN C423
10	449240	1	SPACER, , BSN C423
11	449239	1	STATOR, ALTERNATOR, , BSN C423
12	326441	1	COVER, , BSN C423
13	412552	6	SCREW, , BSN C423
14	326444	1	PIN, , BSN C423
15	449238	1	SCREW, , BSN C423
16	9511499	1	VALVE, HYDRAULIC, (1 to 15), BSN C423
16	84458934	1	VALVE, HYDRAULIC, (1), ASN D424

07.203(01) STRAW ELEVATOR HYDRAULICS WITH LATERAL FLOTATION

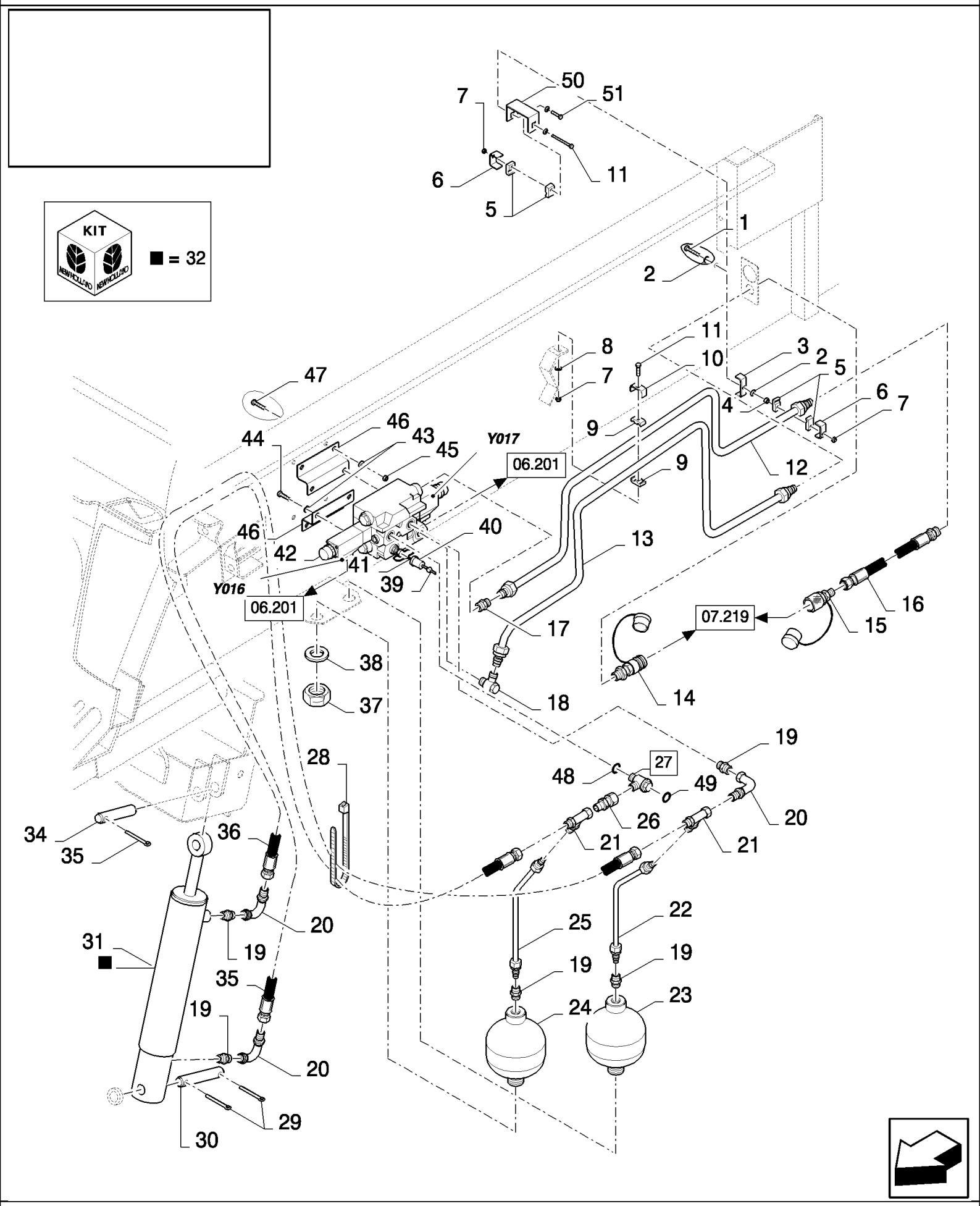

07.203(01) STRAW ELEVATOR HYDRAULICS WITH LATERAL FLOTATION

ссылка	Номер детали	Кол-во	Описание
1	397985	1	BOLT, Hex, M6 x 70, 8.8, Full Thd,
2	322357	2	WASHER, SPRING, Belleville, M6,
3	84814948	1	SUPPORT, , BSN C363
4	15896221	1	NUT, M6, Cl 10,
5	433008	2	CLAMP, {PP:80433008}
6	442340	1	SUPPORT, {PP:80442340}
7	412152	2	NUT, LOCK, M6 x 1, Cl 8.8,
8	86588450	1	WASHER, M6,
9	430357	2	CLAMP, {PP:80430357}
10	431941	1	SUPPORT, {PP:80431941}
11	120056	2	BOLT, Hex, M6 x 50, 8.8,
12	84438626	1	TUBE, HYD,
13	84435717	1	TUBE, HYD, , BSN C419
13	84458560	1	TUBE, HYD, , ASN D420
14	84077513	1	COUPLING, QUICK, MALE,
15	84077512	1	COUPLING, QUICK, MALE,
16	84032826	1	HOSE, , BSN C363
16	84448308	1	HOSE, FLEXIBLE, , ASN D364
17	9516261	1	CONNECTOR, HYD., {PP:89516261}
18	84437554	1	CONNECTOR, HYD.,
19	386215	5	CONNECTOR, HYD., {PP:80386215}
20	418283	3	ELBOW, {PP:80418283}
21	84064562	2	CONNECTOR, HYD.,
22	84440824	1	TUBE, HYD,
23	84017606	1	ACCUMULATOR, 85 Bar
24	84018365	1	ACCUMULATOR, 120 Bar
25	84440815	1	TUBE, HYD,
26	84023301	1	CONNECTOR, HYD.,
27	84023314	1	VALVE, HYDRAULIC, (48,49)
28	396718	4	STRAP, {PP:80396718}
29	412686	2	PIN, SPLIT (COTTER), {PP:80412686} M5 x 32,
30	9593306	1	PIN, {PP:89593306}
31	84098946	1	HYDRAULIC CYLINDER, (32)
32	84026075	1	KIT, SEALS,
33	130012	1	PIN, SPLIT (COTTER), {PP:80130012} M5 x 50,
34	89500923	1	PIN,
35	84031279	1	HOSE, FLEXIBLE,
36	84437574	1	HOSE, FLEXIBLE,
37	308823	2	NUT, M28 x 1.5, Cl 8,
38	140110	2	WASHER, {PP:80140110} 31MM
39	NS	1	NOT SERVICED,
40	84042643	1	COVER, CAP,
41	NS	1	NOT SERVICED,
42	84442642	1	VALVE, HYDRAULIC, , SEE FIGURE 07.225
43	322358	8	WASHER, SPRING, Belleville, M8,

07.203(01) STRAW ELEVATOR HYDRAULICS WITH LATERAL FLOTATION

ссылка	Номер детали	Кол-во	Описание
45	89706690	4	NUT, M8, Cl 8,
46	84439708	2	SUPPORT,
47	120104	4	BOLT, Hex, M8 x 20, 8.8,
48	220122	2	GASKET, {PP:80220122}
49	220049	1	GASKET, {PP:80220049}
50	84018986	1	SUPPORT, , ASN D364
51	120100	1	BOLT, Hex, M6 x 20, 8.8, , ASN D364
44	16043224	4	BOLT, Hex, M8 x 16, 8.8, Full Thd,

07.205(01) CYLINDERS, STRAW ELEVATOR

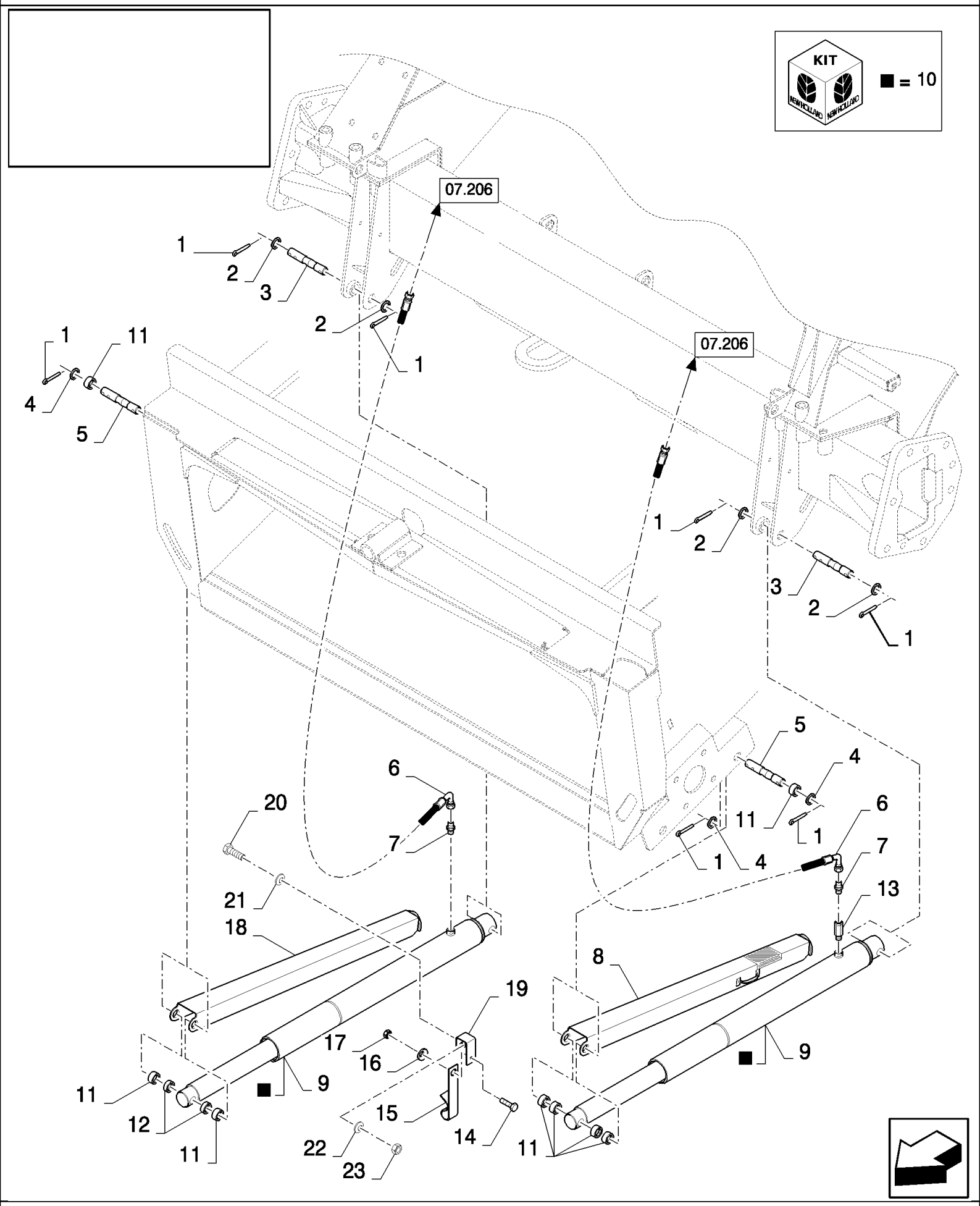

07.205(01) CYLINDERS, STRAW ELEVATOR

ссылка	Номер детали	Кол-во	Описание
1	89515820	8	PIN, SPLIT (COTTER), , BSN C359
1	300423	8	PIN, SPLIT (COTTER), M6.3 x 50, , BSN F360487
1	381928	8	PIN, LOCK, M10 x 50, Slotted, , ASN D488
2	140229	4	WASHER, 11MM, BSN C359
2	441176	4	WASHER, 31MM, BSN F360487
3	84980681	2	PIN, , BSN C359
3	84449061	2	PIN, , BSN F360487
3	87343031	2	PIN, , ASN D488
4	140103	4	WASHER, 26MM, BSN C359
4	441176	10	WASHER, 31MM, ASN D360
5	84980684	2	PIN, , BSN C359
5	84449061	2	PIN, , BSN F360487
5	87343031	2	PIN, , ASN D488
6	84989465	2	HOSE, FLEXIBLE,
7	395782	2	CONNECTOR, HYD.,
8	84068136	1	SUPPORT, , BSN C359
8	84449016	1	SUPPORT, , ASN D360
9	84097018	2	HYDRAULIC CYLINDER, (10), BSN C359
9	84444496	2	CYLINDER, (10), ASN D360
10	84807313	2	KIT, SEALS,
11	9506696	2	BUSHING, , BSN C359
11	84071307	10	BUSHING, , ASN D360
12	9506695	2	BUSHING, , BSN C359
12	84073733	2	BUSHING, , ASN D360
12	9506695	2	BUSHING, , FOR ITALY ONLY, BSN C363
12	84071307	2	BUSHING, , FOR GERMANY ONLY, ASN D364
13	84446999	1	VALVE, CHECK, , FOR ITALY ONLY, BSN C359
14	120100	1	BOLT, Hex, M6 x 20, 8.8,
14	86508568	1	BOLT, Hex, M6 x 16, 8.8,
15	332672	1	HOOK,
16	322357	1	WASHER, SPRING, Belleville, M6,
17	15896221	1	NUT, M6, Cl 10,
18	84068138	1	SUPPORT, , BSN C363
18	84449058	1	SUPPORT, , ASN D364
18	84449367	1	SUPPORT, , FOR GERMANY ONLY, ASN D360
19	84448266	1	SUPPORT,
20	43139	1	SCREW, M10x25
20	9706704	1	BOLT, Hex, M10 x 35, 8.8, Full Thd,
21	140042	1	WASHER, M10 x 34 x 3,
22	140045	1	WASHER, SPRING, Belleville, M10,
23	100016	1	NUT, M10, Cl 8,

07.206(01) CYLINDERS, STRAW ELEVATOR

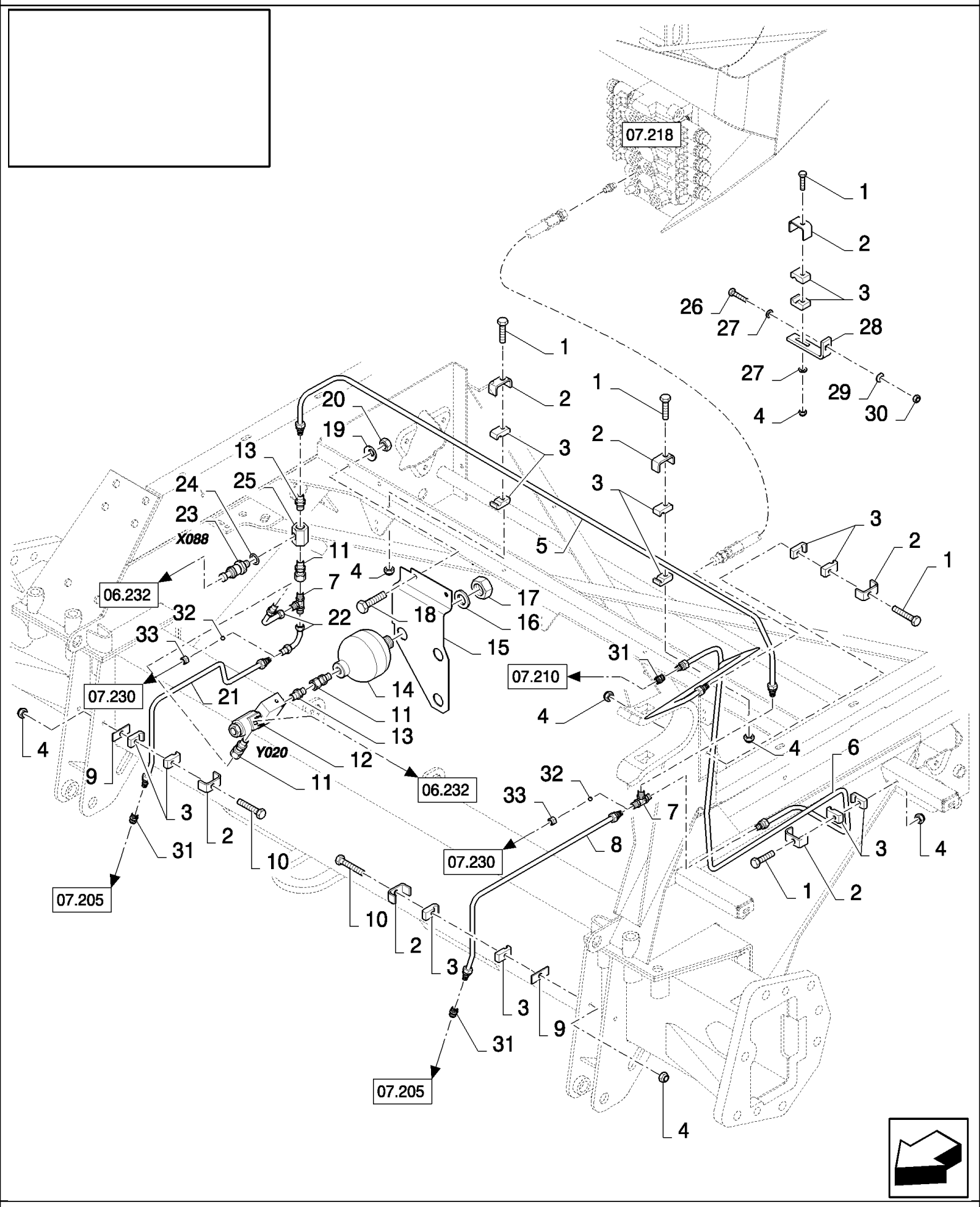

CS660 COMBINE BASE UNIT (1/03-) - Hydraulic System

07.206(01) CYLINDERS, STRAW ELEVATOR

ссылка	Номер детали	Кол-во	Описание
1	86977790	5	BOLT, Hex, M6 x 45, 8.8,
2	442340	AR	SUPPORT, {PP:80442340}
3	433008	AR	CLAMP, {PP:80433008}
4	412152	AR	NUT, LOCK, M6 x 1, Cl 8.8,
5	84437934	1	TUBE, HYD, , FOR CL560 ONLY, FOR CS520, CS540 ONLY
5	84437937	1	TUBE, HYD, , FOR CS640, CS660 ONLY
6	84437916	1	TUBE, HYD, , FOR CS520, CS540 ONLY, BSN C359
6	84440853	1	TUBE, HYD, , FOR CS640, CS660 ONLY, BSN C359
6	84448748	1	TUBE, , BSN F360363
6	84448748	1	TUBE, , FOR CS640, CS660 ONLY, ASN D364
6	84454010	1	TUBE, , FOR CS520, CS540 ONLY, FOR CL560 ONLY, ASN D364
7	150019	2	CONNECTION, 3 WAY, {PP:80150019}
8	84440848	1	TUBE, HYD, , NOT FOR CL560, BSN C359
8	84452309	1	TUBE, HYD, , NOT FOR CL560, ASN D360
9	434097	2	BRACKET, {PP:80434097}
10	120056	2	BOLT, Hex, M6 x 50, 8.8,
11	84018409	3	CONNECTOR, HYD.,
12	84439576	1	VALVE, HYDRAULIC,
13	395782	AR	CONNECTOR, HYD., {PP:80395782}
14	84018325	1	ACCUMULATOR,
15	84441047	1	SUPPORT,
16	140110	1	WASHER, {PP:80140110}
17	308823	1	NUT, M28 x 1.5, Cl 8,
18	43127	2	BOLT, Hex, M8 x 25, 8.8,
19	322358	2	WASHER, SPRING, Belleville, M8,
20	89706690	2	NUT, M8, Cl 8,
21	84440851	1	TUBE, HYD, , NOT FOR CL560, BSN C359
21	84452311	1	TUBE, HYD, , NOT FOR CL560, ASN D360
22	9508529	2	ELBOW, {PP:89508529}
23	86523197	1	SENSOR, (24)
24	84320139	1	O-RING,
25	84334080	1	CONNECTOR, HYD.,
26	86977786	1	BOLT, Hex, M6 x 25, 8.8, , FOR CS520, CS540 ONLY, ASN D360
27	86588450	2	WASHER, M6, , FOR CS520, CS540 ONLY, ASN D360
28	84432231	1	BRACKET, , FOR CS520, CS540 ONLY, ASN D360
29	322357	1	WASHER, SPRING, Belleville, M6, , FOR CS520, CS540 ONLY, ASN D360
30	15896221	1	NUT, M6, Cl 10, , FOR CS520, CS540 ONLY, ASN D360
31	150018	2	CONNECTOR, HYD., {PP:80150018} , ASN D364
32	141390	2	BALL, {PP:80141390} , FOR CL560 ONLY
33	86548976	2	NUT, , FOR CL560 ONLY

07.207(01) HYDRAULICS FOR ENGINE

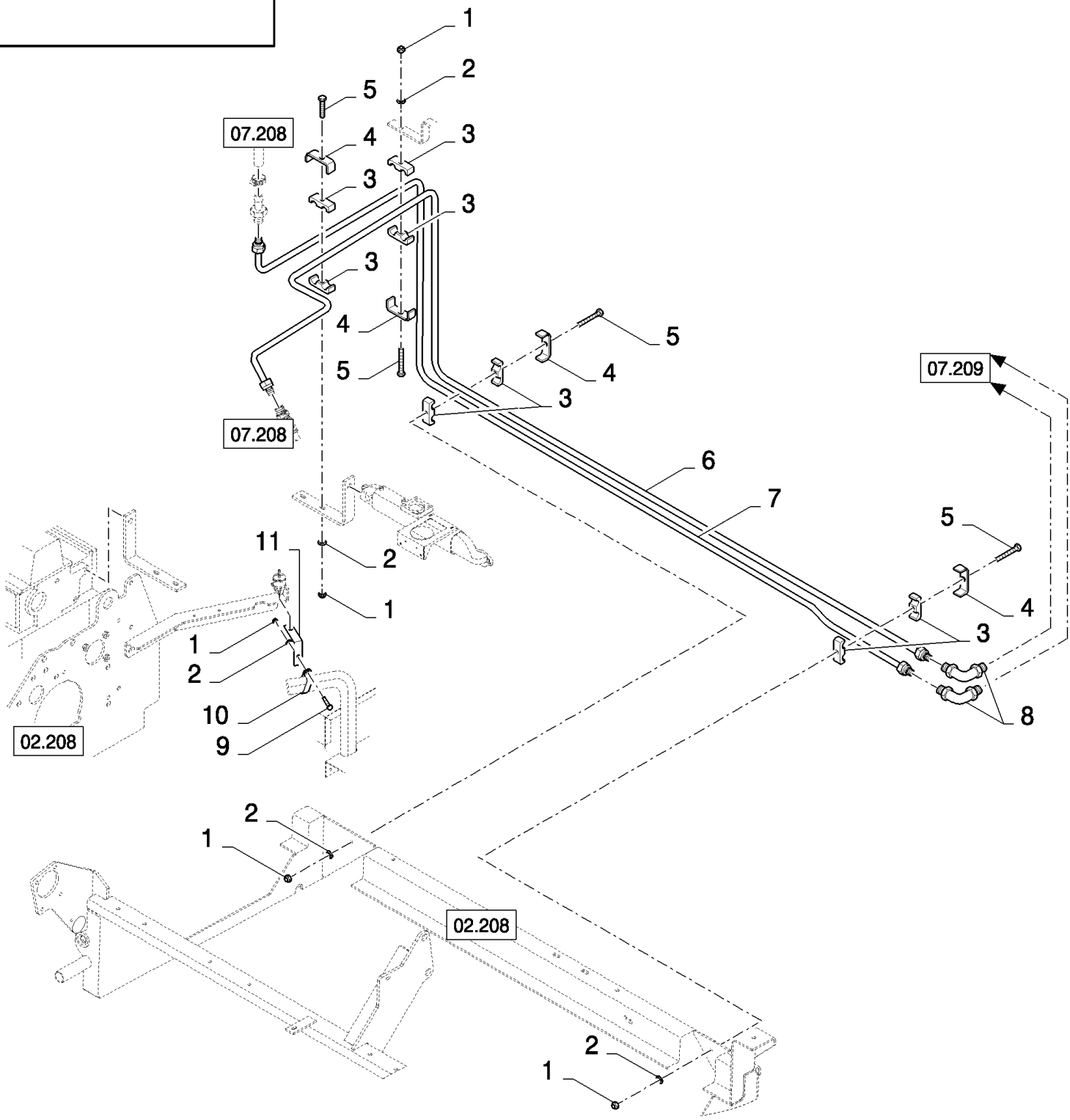

CS660 COMBINE BASE UNIT (1/03-) - Hydraulic System

07.207(01) HYDRAULICS FOR ENGINE

ссылка	Номер детали	Кол-во	Описание
1	412152	AR	NUT, LOCK, M6 x 1, Cl 8.8,
2	86588450	AR	WASHER, M6,
3	430356	8	CLAMP, {PP:80430356}
4	84814948	4	SUPPORT,
5	120056	4	BOLT, Hex, M6 x 50, 8.8,
6	84440889	1	TUBE, HYD, , FOR CL560 ONLY, FOR CS520, CS540 ONLY
6	84440855	1	TUBE, HYD, , FOR CS640, CS660 ONLY
7	84440892	1	TUBE, HYD, , FOR CS520, CS540 ONLY, FOR CL560 ONLY
7	84440857	1	TUBE, HYD, , FOR CS640, CS660 ONLY
8	84439317	2	CONNECTOR, HYD.,
9	86977786	1	BOLT, Hex, M6 x 25, 8.8,
10	417412	1	CLAMP, {PP:80417412}
11	9813452	1	BRACKET, {PP:89813452}

07.208(01) HYDRAULIC PUMP

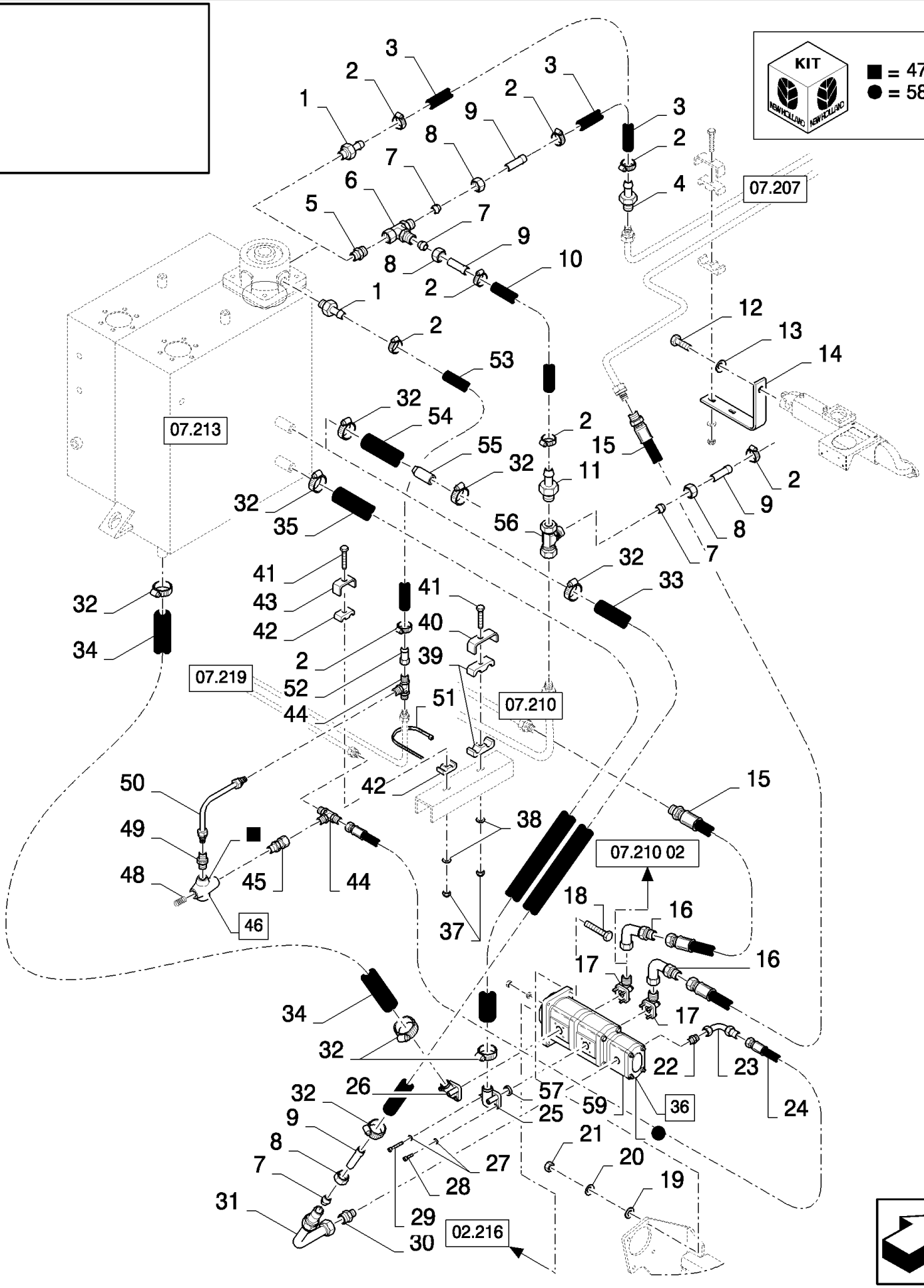

07.208(01) HYDRAULIC PUMP

ссылка	Номер детали	Кол-во	Описание
1	457407	AR	CONNECTOR, HYD., {PP:80457407}
2	326082	AR	CLAMP,
3	84989445	1	HOSE, , FOR CS WITH LATERAL FLOTATION OR FOR CL560 ONLY, BSN C487
3	87332266	1	HOSE ASSY., , FOR CS WITH LATERAL FLOTATION OR FOR CL560 ONLY, ASN D488
3	436360	1	HOSE, , BSN C487
3	451556	1	HOSE, , ASN D488
4	84000318	1	CONNECTOR, HYD.,
5	9501819	1	CONNECTOR, HYD., , FOR CS WITH LATERAL FLOTATION OR FOR CL560 ONLY
6	84042442	1	CONNECTION, 3 WAY, , FOR CS WITH LATERAL FLOTATION OR FOR CL560 ONLY
7	335168	AR	FERRULE, 18MM
8	335170	AR	NUT, 18MM
9	84012346	AR	TUBE,
10	451556	1	HOSE, , BSN C487
10	87332265	1	HOSE ASSY., , ASN D488
10	451556	1	HOSE, , FOR CS WITH LATERAL FLOTATION OR FOR CL560 ONLY, BSN C487
10	750207	1	HOSE, , FOR CS WITH LATERAL FLOTATION OR FOR CL560 ONLY, ASN D488
11	449161	1	CONNECTOR, HYD., , BSN C363
12	9706729	1	BOLT, Hex, 7/16"-14 x 1", G5, Full Thd,
13	412123	1	WASHER, LOCK, M12,
14	84434894	1	BRACKET,
15	426397	2	HOSE, FLEXIBLE, , BSN C363
15	426397	1	HOSE, FLEXIBLE, , ASN D364
16	435349	2	ELBOW, , BSN C363
16	435349	1	ELBOW, , ASN D364
17	337208	2	ELBOW,
18	43128	4	BOLT, Hex, M8 x 30, 8.8,
19	140016	4	WASHER, M8 x 16 x 1.6,
20	412654	4	WASHER, LOCK, 8MM
21	89706690	4	NUT, M8, Cl 8,
22	84989351	1	CONNECTOR, HYD., , FOR CS WITH LATERAL FLOTATION OR FOR CL560 ONLY, BSN C383
22	84454640	1	CONNECTOR, HYD., , ASN D384
23	9508529	1	ELBOW, , FOR CS WITH LATERAL FLOTATION OR FOR CL560 ONLY
24	9833953	1	HOSE, , FOR CS WITH LATERAL FLOTATION OR FOR CL560 ONLY
25	450594	1	ELBOW,
26	753432	1	FILTER,
27	140044	8	WASHER, 6MM
28	84089718	4	SCREW, Hex Soc Hd, M6 x 20, 8.8, M6x20
29	356464	4	SCREW, M6x50
30	394373	1	CONNECTOR, HYD., , FOR CS WITH LATERAL FLOTATION OR FOR CL560 ONLY
31	84019177	1	ELBOW, , FOR CS WITH LATERAL FLOTATION OR FOR CL560 ONLY
32	382527	AR	CLAMP, HOSE,
33	84989249	1	HOSE, , FOR CS WITH LATERAL FLOTATION OR FOR CL560 ONLY
34	84989442	1	HOSE, , FOR CS WITH LATERAL FLOTATION OR FOR CL560 ONLY
34	84453018	1	SLEEVE,
35	84989443	1	HOSE,

07.208(01) HYDRAULIC PUMP

ссылка	Номер детали	Кол-во	Описание
36	84444862	1	PUMP, HYDRAULIC, (58,59)
36	84444861	1	PUMP, HYDRAULIC, (58,59), FOR CS WITH LATERAL FLOTATION OR FOR CL560 ONLY
37	412152	AR	NUT, LOCK, M6 x 1, Cl 8.8,
38	86588450	AR	WASHER, M6,
39	430356	2	CLAMP,
40	84814948	1	SUPPORT,
41	120056	AR	BOLT, Hex, M6 x 50, 8.8,
42	430357	2	CLAMP, , FOR CS WITH LATERAL FLOTATION OR FOR CL560 ONLY
43	431941	1	SUPPORT, , FOR CS WITH LATERAL FLOTATION OR FOR CL560 ONLY
44	150019	2	CONNECTION, 3 WAY, , FOR CS WITH LATERAL FLOTATION OR FOR CL560 ONLY
45	84018409	1	CONNECTOR, HYD., , FOR CS WITH LATERAL FLOTATION OR FOR CL560 ONLY
46	84818231	1	VALVE, HYDRAULIC, (47,48), FOR CS WITH LATERAL FLOTATION OR FOR CL560 ONLY
47	84011927	1	KIT, SEALS, , FOR CS WITH LATERAL FLOTATION OR FOR CL560 ONLY
48	445343	1	SPRING, , FOR CS WITH LATERAL FLOTATION OR FOR CL560 ONLY
49	395782	1	CONNECTOR, HYD., , FOR CS WITH LATERAL FLOTATION OR FOR CL560 ONLY
50	84440827	1	TUBE, HYD, , FOR CS WITH LATERAL FLOTATION OR FOR CL560 ONLY
51	396718	1	STRAP, , FOR CS WITH LATERAL FLOTATION OR FOR CL560 ONLY
52	84434919	1	CONNECTOR, HYD., , FOR CS WITH LATERAL FLOTATION OR FOR CL560 ONLY
53	80750207	1	HOSE, , FOR CS WITH LATERAL FLOTATION OR FOR CL560 ONLY, BSN C487
53	87332267	1	HOSE ASSY., , FOR CS WITH LATERAL FLOTATION OR FOR CL560 ONLY, ASN D488
54	84453152	1	HOSE, , ASN D380
55	84454832	1	PLUG, , ASN D380
56	379431	1	CONNECTION, 3 WAY, , ASN D364
57	167266	2	O-RING, 12-1, 90 Duro, .924 ID x .116" Thk, , ASN D364
58	84607229	2	KIT, SEALS,
59	327187	2	GASKET,
59	418846	2	GASKET,

07.209(01) HYDRAULIC LINES FOR STEERING VALVE

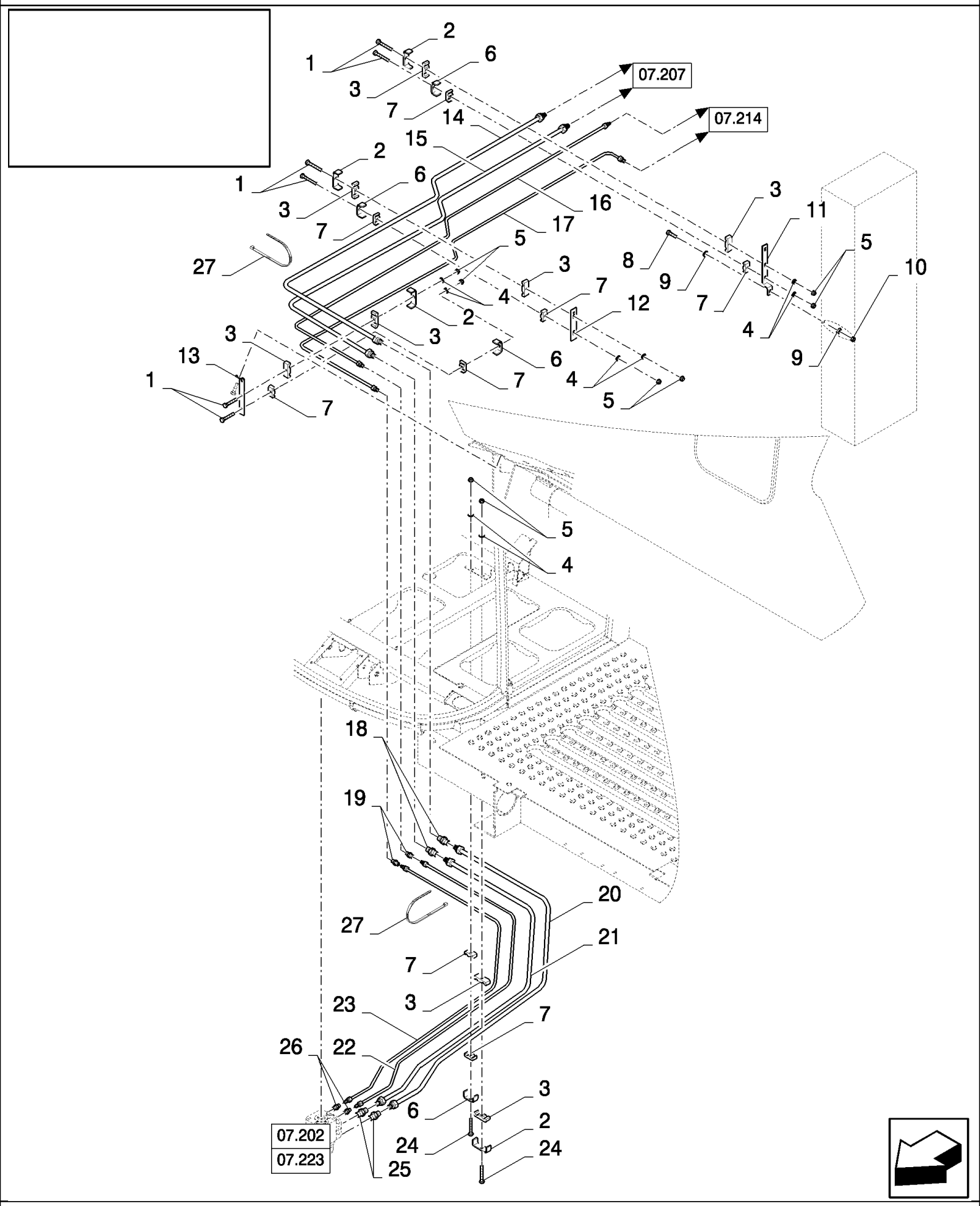

07.209(01) HYDRAULIC LINES FOR STEERING VALVE

ссылка	Номер детали	Кол-во	Описание
1	120056	6	BOLT, Hex, M6 x 50, 8.8,
2	84814948	4	SUPPORT,
3	430356	8	CLAMP, {PP:80430356}
4	86588450	8	WASHER, M6,
5	412152	8	NUT, LOCK, M6 x 1, Cl 8.8,
6	431941	4	SUPPORT, {PP:80431941}
7	430357	8	CLAMP, {PP:80430357}
8	120100	1	BOLT, Hex, M6 x 20, 8.8,
9	322357	2	WASHER, SPRING, Belleville, M6,
10	15896221	1	NUT, M6, Cl 10,
11	84434499	1	SUPPORT,
12	919316	1	SUPPORT, {PP:80919316}
13	84434480	1	SUPPORT,
14	84440861	1	TUBE, HYD,
15	84440859	1	TUBE, HYD,
16	84441089	1	TUBE, HYD,
17	84440799	1	TUBE, HYD,
18	335174	2	CONNECTOR, HYD., {PP:80335174}
19	150017	2	CONNECTOR, HYD., {PP:80150017}
20	84435709	1	TUBE, HYD, , FOR CL560 ONLY, FOR CS520, CS540 ONLY
20	84440170	1	TUBE, HYD, , FOR CS640, CS660 ONLY
21	84438828	1	TUBE, HYD, , FOR CS520, CS540 ONLY, BSN C423
21	84440183	1	TUBE, HYD, , FOR CS640, CS660 ONLY, BSN C423
21	84460667	1	HOSE, , ASN D424
22	84437976	1	TUBE, HYD, , FOR CS520, CS540 ONLY, FOR CL560 ONLY
22	84438546	1	TUBE, HYD, , FOR CS640, CS660 ONLY
23	84437985	1	TUBE, HYD, , FOR CS520, CS540 ONLY, FOR CL560 ONLY
23	84440164	1	TUBE, HYD, , FOR CS640, CS660 ONLY
24	86977790	2	BOLT, Hex, M6 x 45, 8.8,
25	394372	2	CONNECTOR, HYD., {PP:80394372}
26	395019	2	CONNECTOR, HYD., {PP:80395019}
27	86566989	10	STRAP, CABLE,

07.210(01) CYLINDER FOR UNLOADING AUGER AND LH TUBES

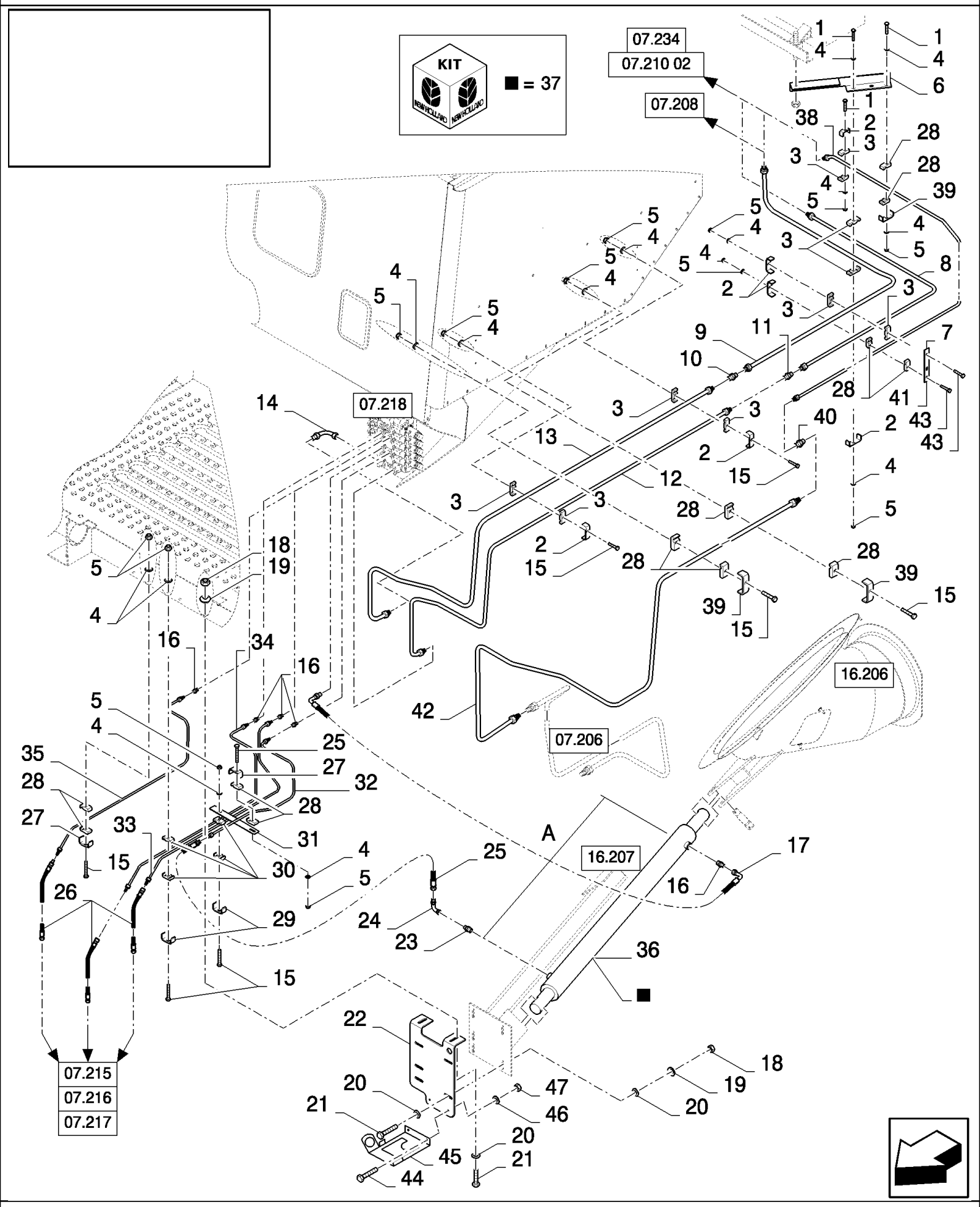

CS660 COMBINE BASE UNIT (1/03-) - Hydraulic System

07.210(01) CYLINDER FOR UNLOADING AUGER AND LH TUBES

ссылка	Номер детали	Кол-во	Описание
1	120056	2	BOLT, Hex, M6 x 50, 8.8,
2	84814948	4	SUPPORT,
3	430356	8	CLAMP, {PP:80430356}
4	86588450	8	WASHER, M6,
5	412152	8	NUT, LOCK, M6 x 1, Cl 8.8,
6	84439450	1	SUPPORT, , BSN C363
6	84453520	1	SUPPORT, , ASN D364
7	919316	1	SUPPORT, {PP:80919316}
8	84437960	1	TUBE, HYD,
9	84437970	1	TUBE, HYD,
10	335173	1	CONNECTOR, HYD., {PP:80335173}
11	335174	1	CONNECTOR, HYD., {PP:80335174}
12	84438819	1	TUBE, HYD,
13	84435715	1	TUBE, HYD,
14	447770	1	CONNECTOR, HYD., {PP:80447770}
15	86977790	6	BOLT, Hex, M6 x 45, 8.8,
16	386215	5	CONNECTOR, HYD., {PP:80386215}
17	84052145	1	HOSE, FLEXIBLE,
18	89706690	6	NUT, M8, Cl 8,
18	9706685	2	NUT, M12, Cl 8,
19	322358	6	WASHER, SPRING, Belleville, M8,
19	140046	2	WASHER, SPRING, Belleville, M12,
20	140041	10	WASHER, M8 x 28 x 3,
20	86511324	2	WASHER, M12 x 24 x 2.5,
21	43128	6	BOLT, Hex, M8 x 30, 8.8,
21	300389	2	BOLT, Hex, M12 x 35, 8.8, Full Thd,
22	84439593	1	PLATE, , BSN C363
22	84458481	1	SUPPORT, , ASN D364
23	451205	1	CONNECTOR, HYD., {PP:80451205} , BSN C363
23	396017	1	CONNECTOR, HYD., {PP:80396017} , ASN D364
24	418283	1	ELBOW, {PP:80418283}
25	424524	1	HOSE, {PP:80424524}
26	84989470	3	HOSE, FLEXIBLE,
26	84019350	3	HOSE, , FOR CL560 ONLY
27	433101	2	SUPPORT, {PP:80433101}
28	433008	AR	CLAMP, {PP:80433008}
29	431941	2	SUPPORT, {PP:80431941}
30	430357	4	CLAMP, {PP:80430357}
31	84000903	1	BRACKET,
32	84435701	1	TUBE, HYD,
33	84435703	1	TUBE, HYD,
34	84437919	1	TUBE, HYD,
35	84437921	1	TUBE, HYD,
36	84436671	1	HYDRAULIC CYLINDER, (37), BSN C363
36	84038955	1	HYDRAULIC CYLINDER, (37), BSN F364415

07.210(01) CYLINDER FOR UNLOADING AUGER AND LH TUBES

ссылка	Номер детали	Кол-во	Описание
36	84436671	1	HYDRAULIC CYLINDER, (37), ASN D416
37	9508805	1	KIT, SEALS, {PP:89508805} A=771MM
37	84023786	1	KIT, SEALS, A=709MM
38	84453800	1	TUBE, HYD, , ASN D364
39	442340	AR	SUPPORT, {PP:80442340} , ASN D364
40	150018	1	CONNECTOR, HYD., {PP:80150018} , ASN D364
41	84447755	1	BRACKET, , ASN D364
42	84453802	1	TUBE, HYD, , ASN D364
43	120056	AR	BOLT, Hex, M6 x 50, 8.8, , ASN D364
44	43127	2	BOLT, Hex, M8 x 25, 8.8, , ASN D364
45	84459469	1	BRACKET, , ASN D364
46	322358	2	WASHER, SPRING, Belleville, M8, , ASN D364
47	89706690	2	NUT, M8, Cl 8, , ASN D364
48	396718	1	STRAP, {PP:80396718}

07.210(02) CYLINDER FOR UNLOADING AUGER AND LH TUBES - HEADER HEIGHT VALVE

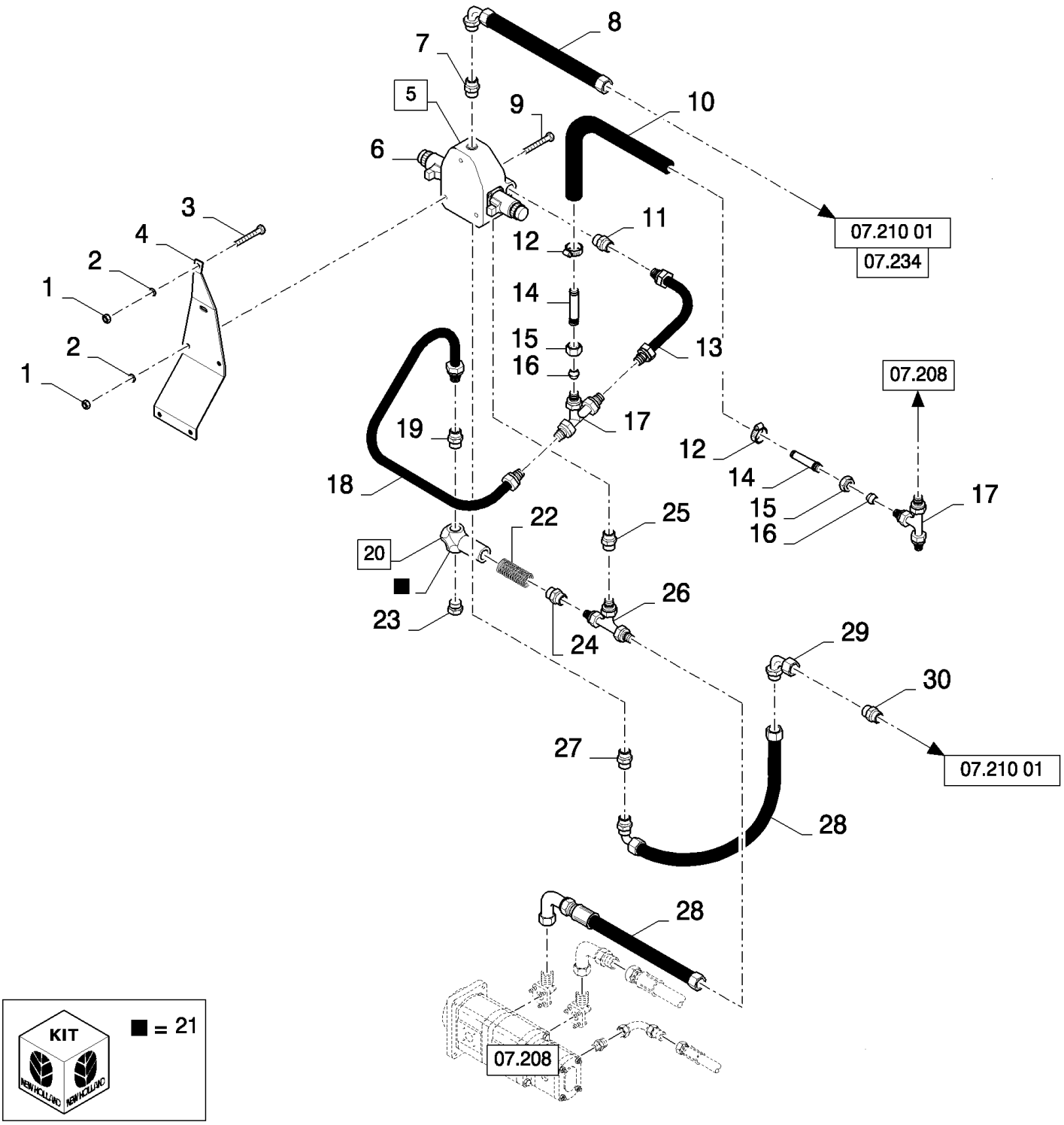

CS660 COMBINE BASE UNIT (1/03-) - Hydraulic System

07.210(02) CYLINDER FOR UNLOADING AUGER AND LH TUBES - HEADER HEIGHT VALVE

ссылка	Номер детали	Кол-во	Описание
1	89706690	6	NUT, M8, Cl 8,
2	322358	6	WASHER, SPRING, Belleville, M8,
3	43127	3	BOLT, Hex, M8 x 25, 8.8,
4	84453500	1	SUPPORT,
5	87038193	1	VALVE, HYDRAULIC, (6)
6	84062114	2	ELECTROMAGNET, PROP
7	9516261	1	CONNECTOR, HYD., {PP:89516261}
8	84022234	1	HOSE,
9	43133	3	BOLT, {PP:80043133} Hex, M8 x 80, 8.8,
10	80750207	1	HOSE,
11	9501819	1	CONNECTOR, HYD., {PP:89501819}
12	326082	2	CLAMP, {PP:80326082}
13	84453784	1	TUBE, HYD,
14	84012346	2	TUBE,
15	335170	2	NUT, {PP:80335170}
16	335168	2	FERRULE, {PP:80335168}
17	379431	2	CONNECTION, 3 WAY, {PP:80379431}
18	84453806	1	TUBE, HYD,
19	394373	1	CONNECTOR, HYD., {PP:80394373}
20	84453608	1	VALVE, HYDRAULIC, (21,22)
21	84011927	1	KIT, SEALS,
22	84453955	1	SPRING,
23	417006	1	PLUG, {PP:80417006}
24	394372	1	CONNECTOR, HYD., {PP:80394372}
25	84453589	1	FITTING, PIPE,
26	84042903	1	CONNECTOR, HYD.,
27	9516263	1	CONNECTOR, HYD., {PP:89516263}
28	89815904	2	HOSE, FLEXIBLE,
29	435349	1	ELBOW, {PP:80435349}
30	335174	1	CONNECTOR, HYD., {PP:80335174}

07.211(01) HYDRAULIC FOR STEERING CYLINDER, ADJUSTABLE

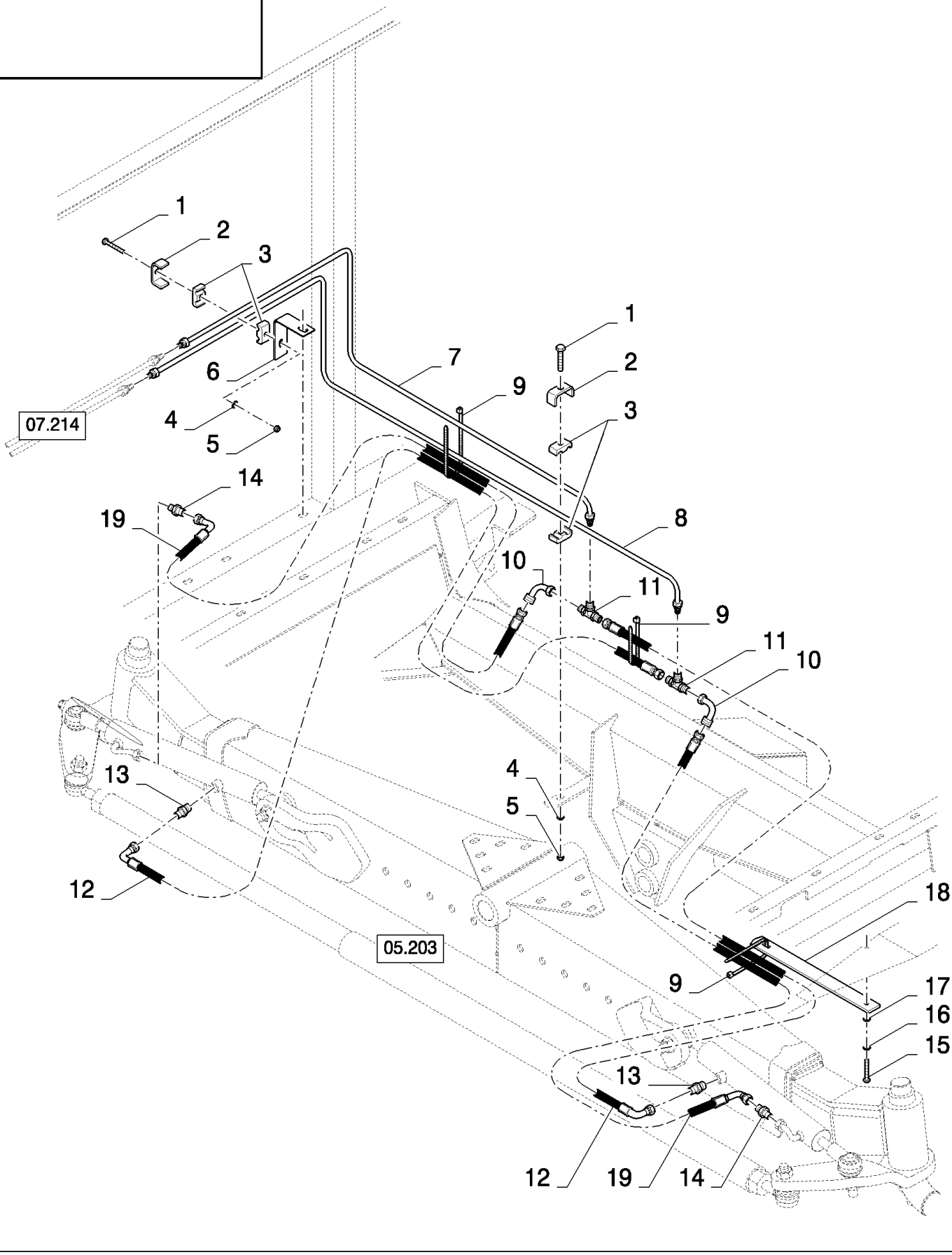

CS660 COMBINE BASE UNIT (1/03-) - Hydraulic System

07.211(01) HYDRAULIC FOR STEERING CYLINDER, ADJUSTABLE

ссылка	Номер детали	Кол-во	Описание
1	120102	2	BOLT, Hex, M6 x 40, 8.8, Full Thd,
2	431941	2	SUPPORT, {PP:80431941}
3	430357	4	CLAMP, {PP:80430357}
4	86588450	2	WASHER, M6,
5	412152	2	NUT, LOCK, M6 x 1, Cl 8.8,
6	9813452	1	BRACKET, {PP:89813452}
7	84441297	1	TUBE, HYD, , FOR CS520, CS540 ONLY
7	84440774	1	TUBE, HYD, , FOR CS640, CS660 ONLY
8	84441313	1	TUBE, HYD, , FOR CS520, CS540 ONLY
8	84440777	1	TUBE, HYD, , FOR CS640, CS660 ONLY
9	368582	3	STRAP, {PP:80368582}
10	418284	2	ELBOW, {PP:80418284}
11	395472	2	CONNECTION, 3 WAY, {PP:80395472}
12	84078809	2	HOSE, FLEXIBLE,
13	395019	2	CONNECTOR, HYD., {PP:80395019}
14	84442478	2	CONNECTOR, HYD.,
15	86508583	1	BOLT, Hex, M16 x 35, 8.8,
16	140048	1	WASHER, SPRING, Belleville, M16,
17	140020	1	WASHER, M16 x 30 x 3,
18	84446279	1	PLATE, FIXING,
19	84078809	2	HOSE, FLEXIBLE, , BSN C487
19	87343426	2	HOSE ASSY., , ASN D488

07.212(01) HYDRAULIC TANK

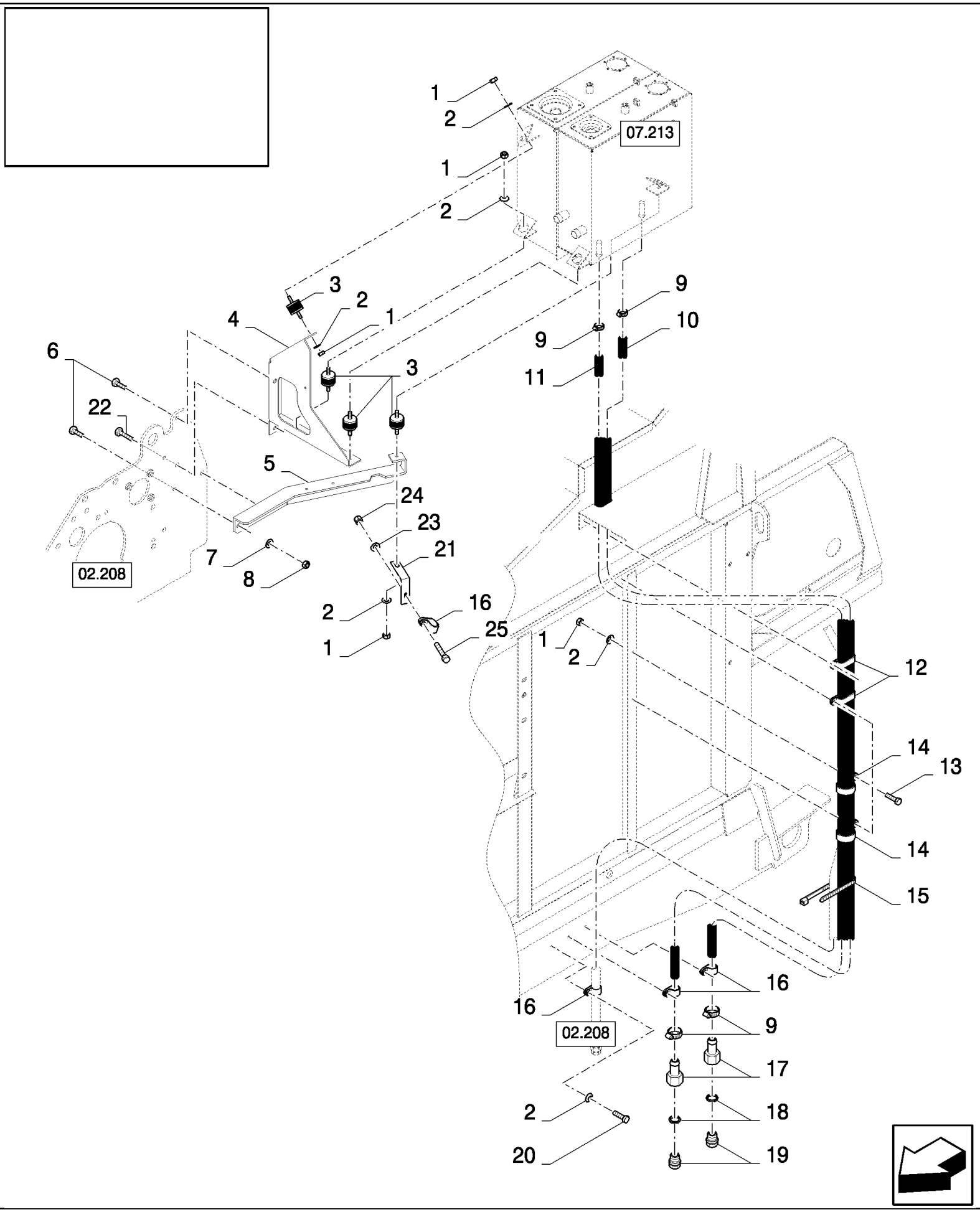

07.212(01) HYDRAULIC TANK

ссылка	Номер детали	Кол-во	Описание
1	89706690	11	NUT, M8, Cl 8,
2	322358	14	WASHER, SPRING, Belleville, M8,
3	9833258	4	SHOCK ABSORBER, {PP:89833258}
4	84981303	1	SUPPORT,
5	84980698	1	SUPPORT,
6	9706687	4	BOLT, Hex, M12 x 30, 8.8,
7	140046	4	WASHER, SPRING, Belleville, M12,
8	9706685	4	NUT, M12, Cl 8,
9	326082	4	CLAMP, {PP:80326082}
10	84989662	1	HOSE, , BSN C363
11	84441444	1	HOSE,
12	417412	2	CLAMP, {PP:80417412}
13	43128	3	BOLT, Hex, M8 x 30, 8.8,
14	455556	2	CLAMP, {PP:80455556}
15	396718	2	STRAP, {PP:80396718}
16	418407	3	CLAMP, {PP:80418407}
17	80326079	2	CONNECTOR, HYD.,
18	9511034	2	GASKET, {PP:89511034} , BSN C363
18	9511034	1	GASKET, {PP:89511034} , ASN D364
19	150060	2	PLUG, {PP:80150060} , BSN C363
19	150060	1	PLUG, {PP:80150060} , ASN D364
20	412479	3	BOLT, {PP:80412479} Hex, M8 x 35, 8.8,
21	9813452	1	BRACKET, {PP:89813452}
22	309086	1	BOLT, Hex, M12 x 60, 8.8, Full Thd,
23	86588450	1	WASHER, M6,
24	412152	1	NUT, LOCK, M6 x 1, Cl 8.8,
25	86977786	1	BOLT, Hex, M6 x 25, 8.8,

07.213(01) HYDRAULIC TANK

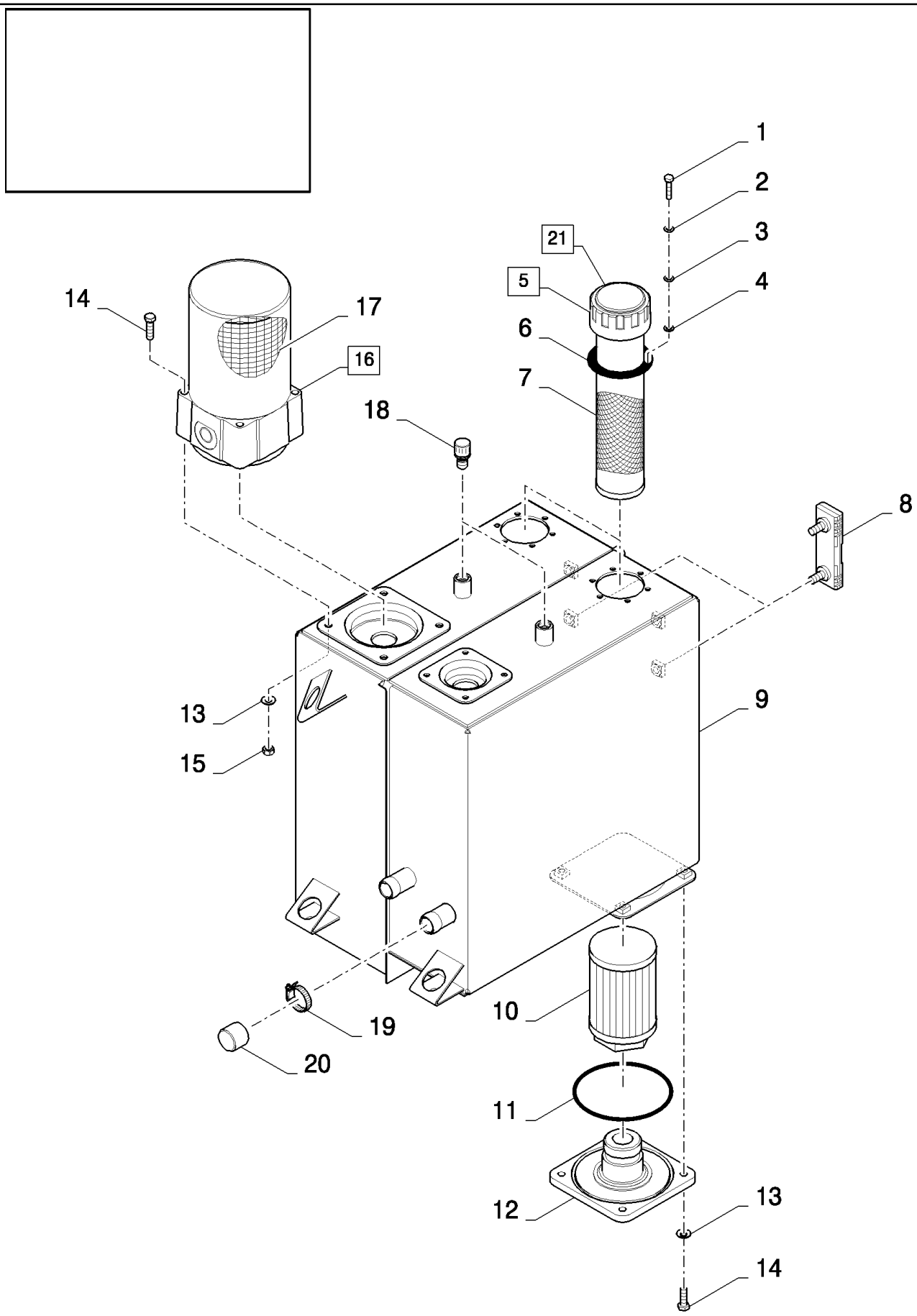

07.213(01) HYDRAULIC TANK

ссылка	Номер детали	Кол-во	Описание
1	120098	12	BOLT, Hex, M5 x 20, 8.8, Full Thd,
2	140014	12	WASHER, M5 x 10 x 1,
2	9824326	6	WASHER, {PP:89824326} M5, 5MM
3	373817	12	ELEMENT, SEALING, {PP:80373817} , BSN C363
3	373817	6	ELEMENT, SEALING, {PP:80373817} , ASN D364
4	446307	12	SEALRING, {PP:80446307} , BSN C363
4	446307	6	SEALRING, {PP:80446307} , ASN D364
5	9508294	2	FILTER, {PP:89508294} (6,7), BSN C363
5	9508294	1	FILTER, (6,7,21), ASN D364
6	84037210	1	KIT, SEALS, , BSN C411
6	87054107	1	KIT, SEALS, , ASN D412
7	9811443	1	FILTER, ELEMENT, , BSN C411
7	87054105	1	KIT, , ASN D412
8	923011	2	INDICATOR, , BSN C363
8	923011	1	INDICATOR, , ASN D364
9	84982125	1	RESERVOIR, HYDRAULIC OIL, , BSN C363
9	84453145	1	RESERVOIR, HYDRAULIC OIL, , BSN F364487
9	84983496	1	RESERVOIR, HYDRAULIC OIL, , ASN D488
10	84031924	1	FILTER, HYDRAULIC OIL,
11	9840056	1	O-RING, -248, 70 Duro, 4.734" ID x .139" Thk,
12	84043513	1	SUPPORT,
13	322358	8	WASHER, SPRING, Belleville, M8,
14	43127	8	BOLT, Hex, M8 x 25, 8.8,
15	89706690	4	NUT, M8, Cl 8,
16	9811704	1	FILTER, HYDRAULIC OIL, (17)
17	9814477	1	FILTER, ELEMENT,
18	9817518	2	BREATHER,
19	382527	1	CLAMP, HOSE, , ASN D488
20	84983512	1	CUP, COVER, , ASN D488
21	87054106	1	CAP, FILLER, (6), ASN D412

07.214(01) HYDRAULIC TUBES RH

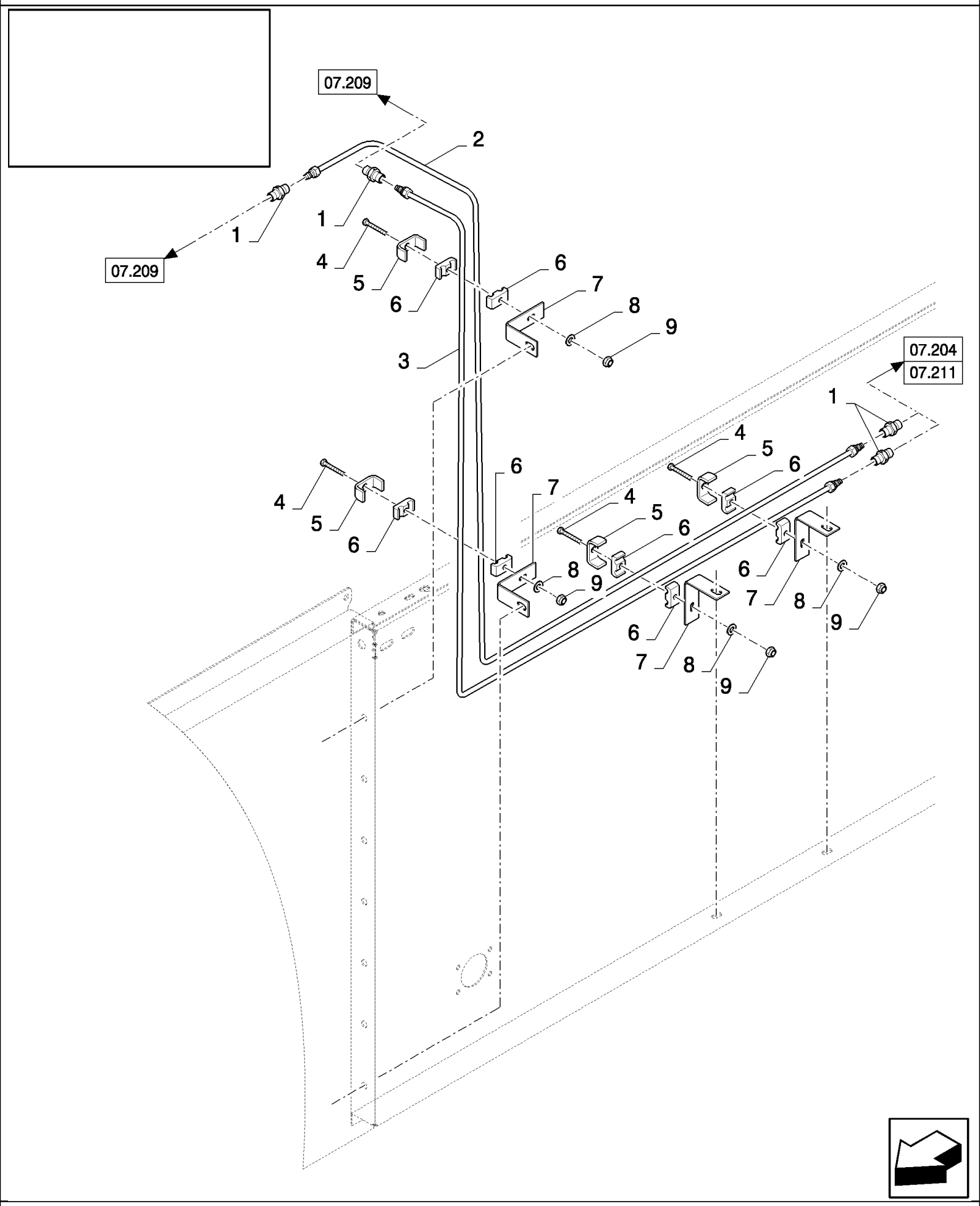

07.214(01) HYDRAULIC TUBES RH

ссылка	Номер детали	Кол-во	Описание
1	150017	4	CONNECTOR, HYD., {PP:80150017}
2	84440784	1	TUBE, HYD,
3	84440782	1	TUBE, HYD,
4	120102	4	BOLT, Hex, M6 x 40, 8.8, Full Thd,
5	431941	4	SUPPORT, {PP:80431941}
6	430357	8	CLAMP, {PP:80430357}
7	9813452	4	BRACKET, {PP:89813452}
8	86588450	4	WASHER, M6,
9	412152	4	NUT, LOCK, M6 x 1, Cl 8.8,

07.215(01) HYDRAULICS TO STRAW ELEVATOR, QUICK COUPLER

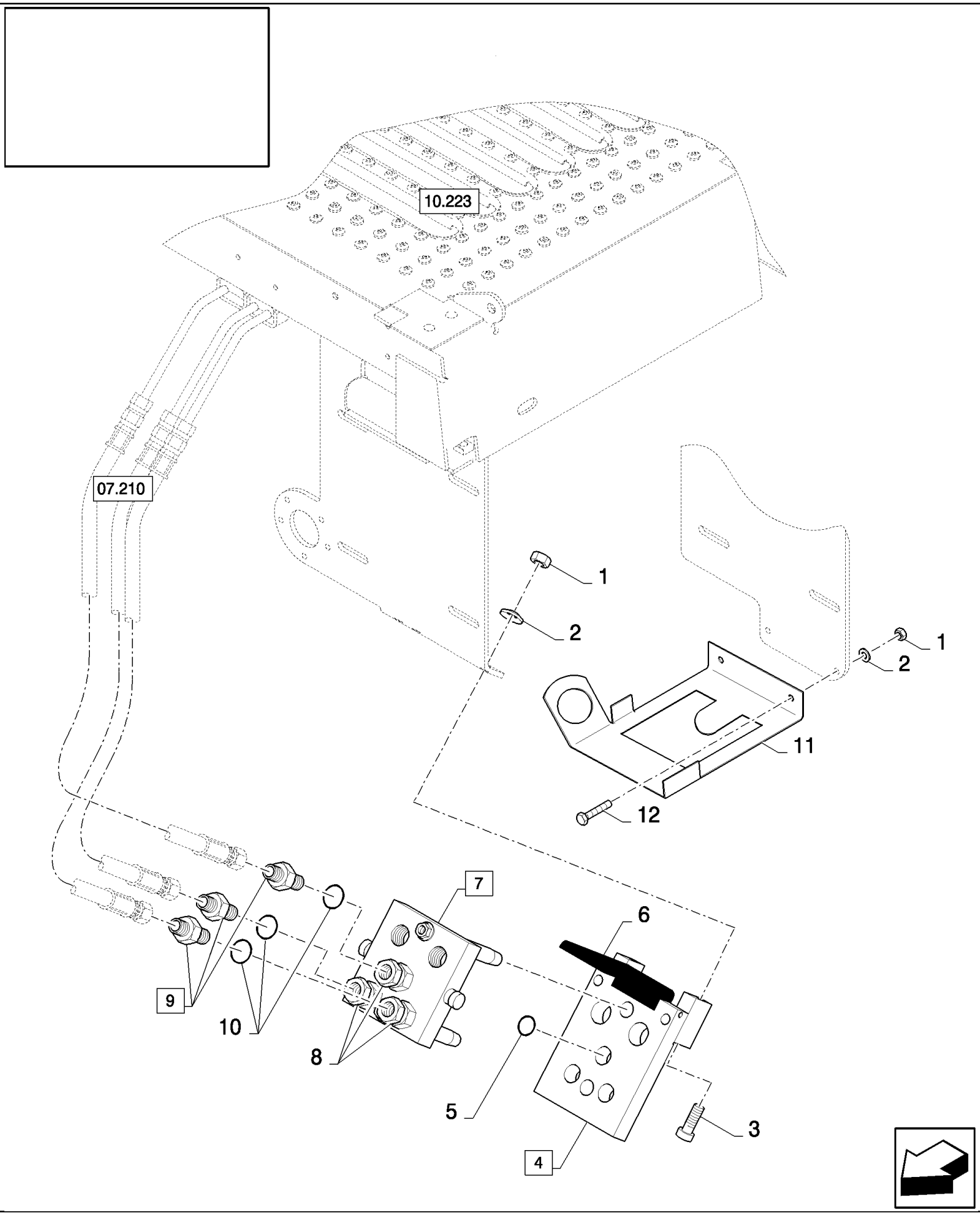

07.215(01) HYDRAULICS TO STRAW ELEVATOR, QUICK COUPLER

ссылка	Номер детали	Кол-во	Описание
1	89706690	2	NUT, M8, Cl 8,
2	322358	2	WASHER, SPRING, Belleville, M8,
3	9706749	2	SCREW, {PP:89706749} Hex Soc Hd, M8 x 25, 12.9, M8x25, BSN C415
4	84435012	1	COUPLING, QUICK, MALE, (5,6), BSN C415
5	84435045	1	SEAL, , BSN C415
6	84435044	1	COVER, , BSN C415
7	84435011	1	COUPLING, QUICK, MALE, (8)
8	84435504	3	CONNECTOR, HYD.,
9	84077400	3	CONNECTOR, HYD., (10)
10	9617873	3	O-RING, 6-1, 90 Duro, .468" ID x .078" Thk,
11	84459469	1	BRACKET,
12	43127	2	BOLT, Hex, M8 x 25, 8.8,

07.217(01) HYDRAULICS TO STRAW ELEVATOR

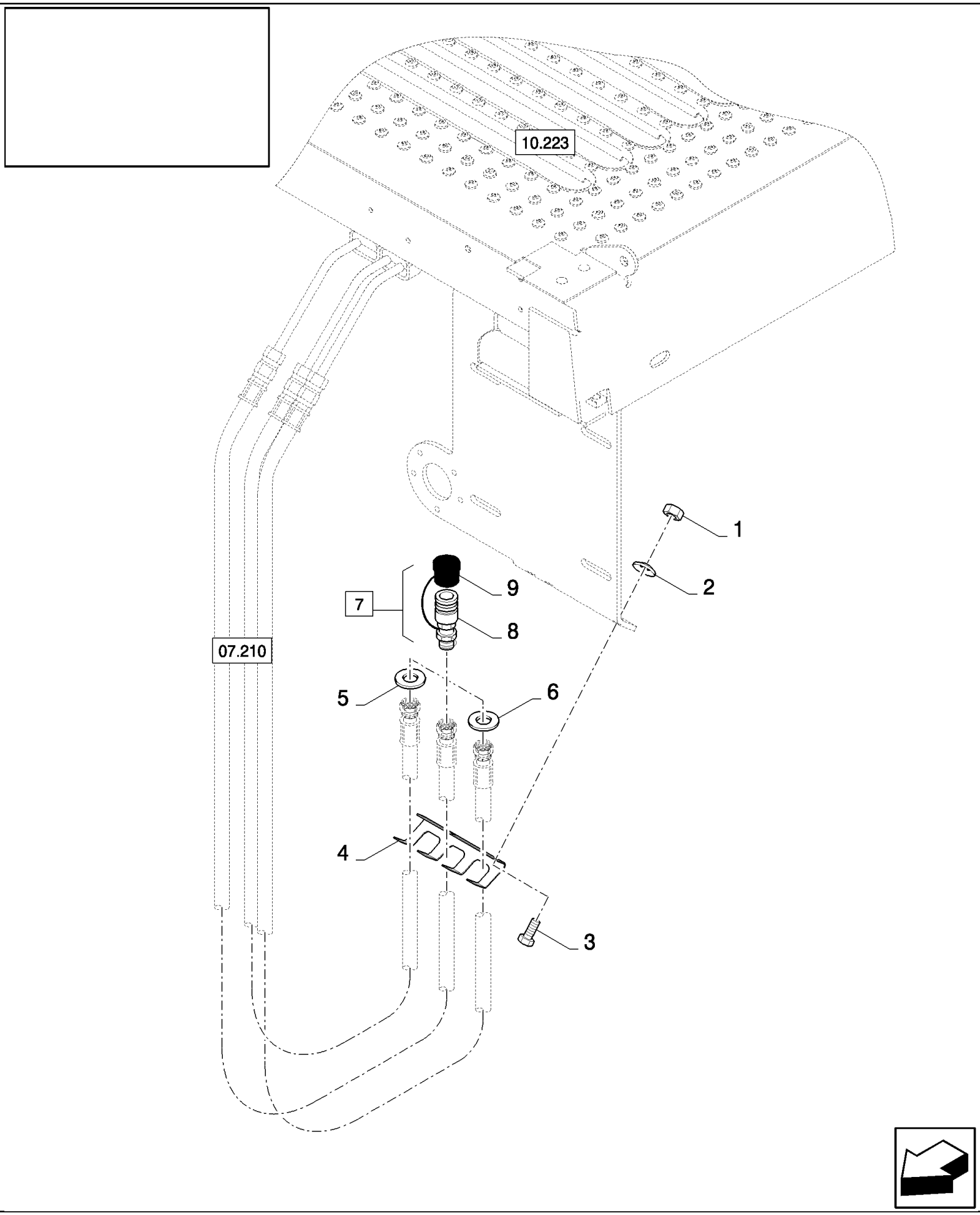

07.217(01) HYDRAULICS TO STRAW ELEVATOR

ссылка	Номер детали	Кол-во	Описание
1	15896221	2	NUT, M6, Cl 10,
2	322357	2	WASHER, SPRING, Belleville, M6,
3	120100	2	BOLT, Hex, M6 x 20, 8.8,
4	84441232	1	SUPPORT,
5	747811	1	WASHER, {PP:80747811} 15MM
6	747812	1	WASHER, {PP:80747812} 15MM
7	456012	3	COUPLING, QUICK, MALE, {PP:80456012} (8,9)
8	750481	3	CONNECTOR, HYD., {PP:80750481}
9	456014	3	DUST CAP, {PP:80456014}

07.218(01) MAIN STACK VALVE

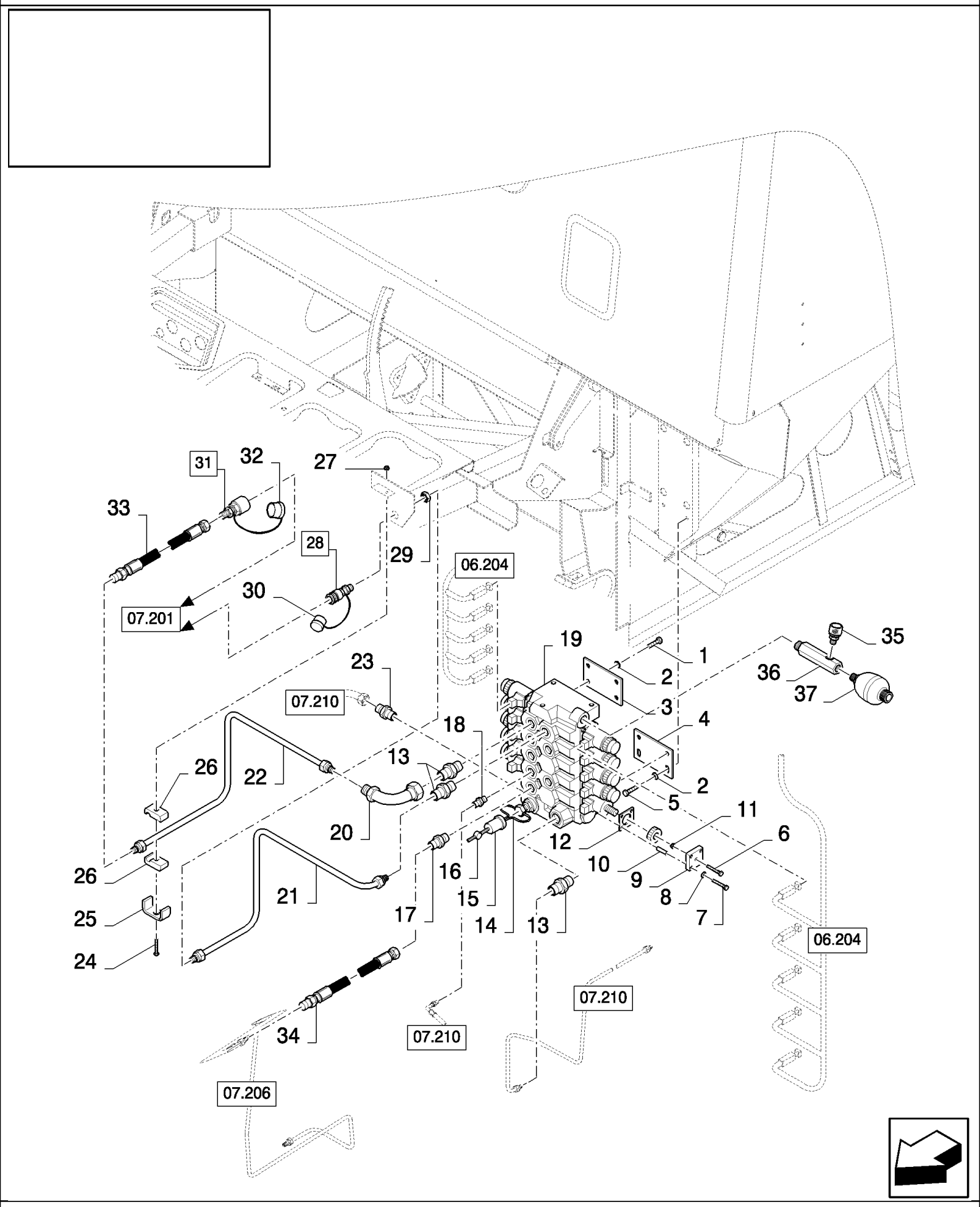

07.218(01) MAIN STACK VALVE

ссылка	Номер детали	Кол-во	Описание
1	16043224	4	BOLT, Hex, M8 x 16, 8.8, Full Thd, , FOR CL560 ONLY, FOR CS520 ONLY
2	322358	8	WASHER, SPRING, Belleville, M8,
3	84334079	1	SUPPORT,
4	84334065	1	SUPPORT, , FOR CS540, CS640, CS660 ONLY
4	84439716	1	SUPPORT, , FOR CL560 ONLY, FOR CS520 ONLY
5	120104	4	BOLT, Hex, M8 x 20, 8.8,
6	43117	1	BOLT, Hex, M6 x 30, 8.8,
7	412559	4	BOLT, {PP:80412559} Hex, M6 x 50, 8.8, Full Thd, M6x50
8	322357	4	WASHER, SPRING, Belleville, M6,
9	84441475	1	PLATE, , BSN C363
10	84434638	4	BUSHING, , BSN C363
11	353308	1	NUT, LOCK, M6 x 1, Cl 8,
12	84441474	1	PLATE, , BSN C363
13	394372	3	CONNECTOR, HYD., {PP:80394372}
14	NSS	1	NOT SERVICED SEPARATELY,
15	84042643	1	COVER, CAP,
16	NSS	1	NOT SERVICED SEPARATELY,
17	395782	1	CONNECTOR, HYD., {PP:80395782} , BSN C359
17	150018	1	CONNECTOR, HYD., {PP:80150018} , BSN F360363
18	386215	5	CONNECTOR, HYD., {PP:80386215}
19	84442641	1	VALVE, HYDRAULIC, , SEE FIGURE 07.225, BSN C363
19	84453514	1	VALVE, HYDRAULIC, , SEE FIGURE 07.225, FOR CS540, CS640, CS660 ONLY, ASN D364
19	84454508	1	VALVE, HYDRAULIC, , FOR CL560 ONLY, SEE FIGURE 07.225, FOR CS520 ONLY
20	435349	1	ELBOW, {PP:80435349} , NOT FOR CL560
21	84435699	1	TUBE, , NOT FOR CL560
22	84437942	1	TUBE, , NOT FOR CL560
23	9501819	1	CONNECTOR, HYD., {PP:89501819} , NOT FOR CL560
24	120056	1	BOLT, Hex, M6 x 50, 8.8, , NOT FOR CL560
25	433100	1	SUPPORT, {PP:80433100} , NOT FOR CL560
26	433007	2	CLAMP, {PP:80433007} , NOT FOR CL560
27	412152	1	NUT, LOCK, M6 x 1, Cl 8.8, , NOT FOR CL560
28	457449	1	JOINT, UNIVERSAL, {PP:80457449} (29,30), NOT FOR CL560
29	NSS	1	NOT SERVICED SEPARATELY, , NOT FOR CL560
30	9508639	1	CAP, {PP:89508639} , NOT FOR CL560
31	457420	1	JOINT, UNIVERSAL, {PP:80457420} , NOT FOR CL560
32	9508643	1	CAP, {PP:89508643} , NOT FOR CL560
33	9512067	1	HOSE, {PP:89512067} , NOT FOR CL560
34	9833953	1	HOSE, {PP:89833953} , NOT FOR CL560, BSN F360363
35	84100207	1	COUPLING, QUICK, MALE, , FOR CS540, CS640, CS660 ONLY
36	84453667	1	CONNECTOR, HYD., , FOR CS540, CS640, CS660 ONLY
37	84453641	1	ACCUMULATOR, , FOR CS540, CS640, CS660 ONLY
1	16043224	4	BOLT, Hex, M8 x 16, 8.8, Full Thd, , FOR CS540, CS640, CS660 ONLY

07.219(01) HYDRAULICS FOR LATERAL FLOTATION

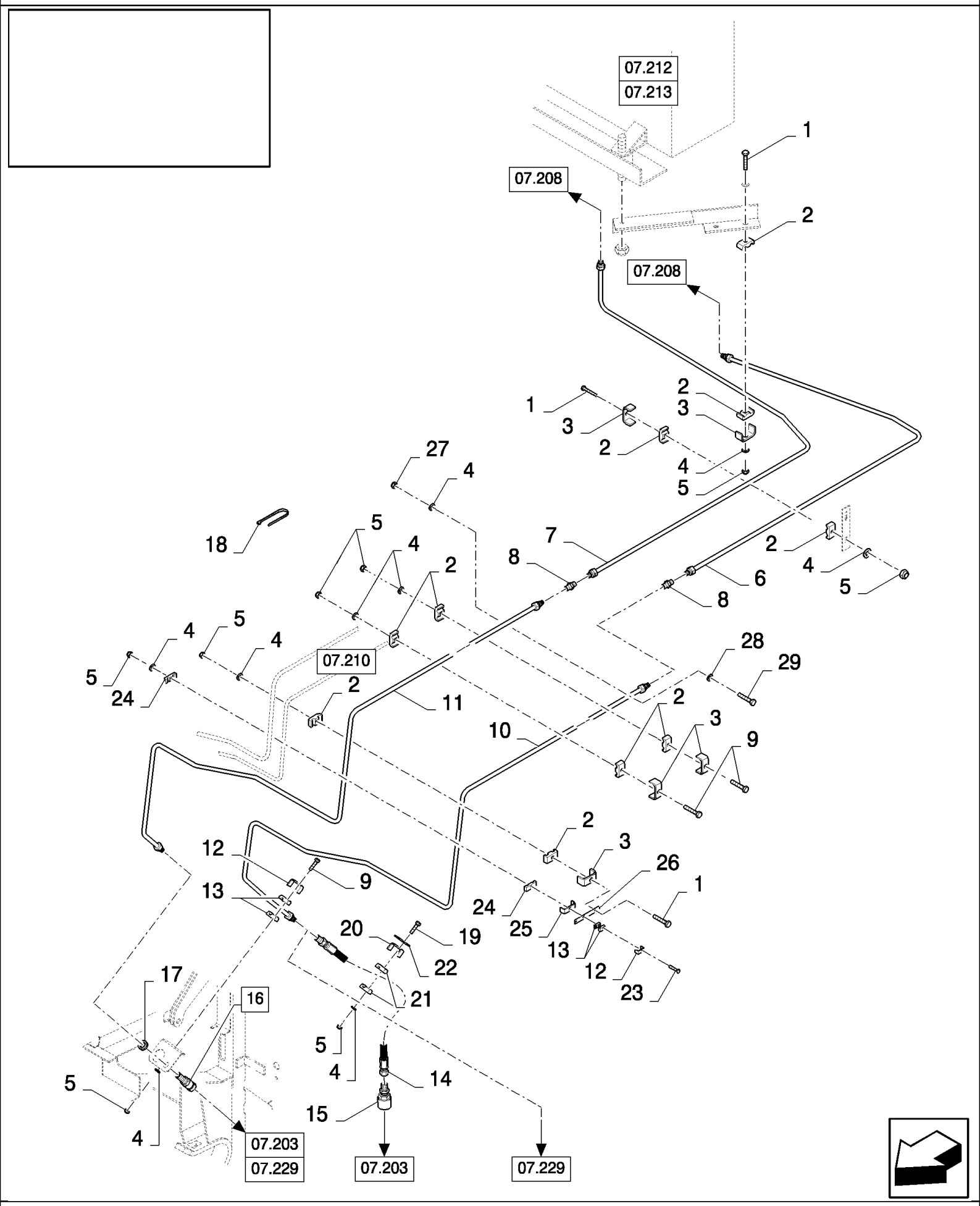

CS660 COMBINE BASE UNIT (1/03-) - Hydraulic System

07.219(01) HYDRAULICS FOR LATERAL FLOTATION

ссылка	Номер детали	Кол-во	Описание
1	120056	2	BOLT, Hex, M6 x 50, 8.8,
2	430357	8	CLAMP, {PP:80430357} 8-12MM
3	431941	4	SUPPORT, {PP:80431941}
4	86588450	5	WASHER, M6,
5	412152	5	NUT, LOCK, M6 x 1, Cl 8.8,
6	84438785	1	TUBE,
7	84438788	1	TUBE,
8	150018	2	CONNECTOR, HYD., {PP:80150018}
9	86977790	3	BOLT, Hex, M6 x 45, 8.8,
10	84438778	1	TUBE, , FOR CL560 ONLY, FOR CS540 ONLY, FOR CS520 ONLY
10	84440193	1	TUBE, , FOR CS640, CS660 ONLY
11	84440766	1	TUBE, , FOR CS540 ONLY, FOR CL560 ONLY, FOR CS520 ONLY
11	84440769	1	TUBE, , FOR CS640, CS660 ONLY
12	442340	1	SUPPORT, {PP:80442340}
13	433008	2	CLAMP, {PP:80433008}
14	84444386	1	HOSE, FLEXIBLE, , BSN C363
14	84448307	1	HOSE, FLEXIBLE, , ASN D364
15	84077512	1	COUPLING, QUICK, MALE,
16	84077513	1	COUPLING, QUICK, MALE, (17)
16	84430371	1	CONNECTOR, HYD., , FOR CL560 ONLY
17	NSS	1	NOT SERVICED SEPARATELY,
18	396718	3	STRAP, {PP:80396718} , FOR CL560 ONLY, FOR CS520 ONLY
19	338413	1	BOLT, Hex, M6 x 60, 8.8,
20	433100	1	SUPPORT, {PP:80433100}
21	433007	2	CLAMP, {PP:80433007}
22	434103	1	PLATE, {PP:80434103}
23	86508570	1	BOLT, Hex, M6 x 80, 8.8,
24	430356	2	CLAMP, {PP:80430356} 16MM - 3/4"
25	84814948	1	SUPPORT,
26	919316	1	SUPPORT, {PP:80919316}
27	15896221	2	NUT, M6, Cl 10,
28	322357	2	WASHER, SPRING, Belleville, M6,
29	120100	2	BOLT, Hex, M6 x 20, 8.8,

07.220(01) HYDROSTATIC LINES

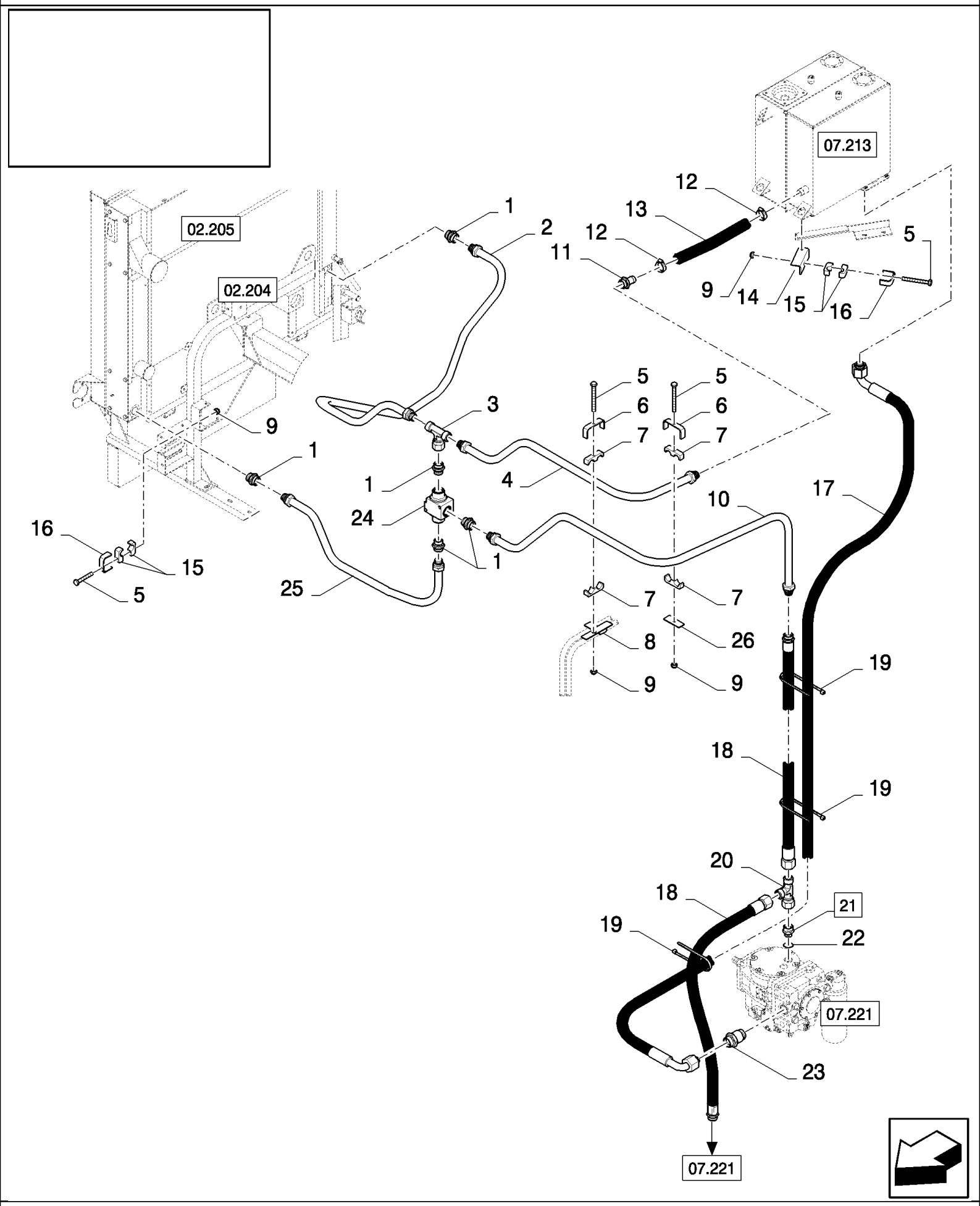

07.220(01) HYDROSTATIC LINES

ссылка	Номер детали	Кол-во	Описание
1	84074173	5	CONNECTOR, HYD.,
2	84334655	1	TUBE, HYD,
3	84041626	1	CONNECTION, 3 WAY,
4	84334649	1	TUBE, HYD,
5	86508569	4	BOLT, Hex, M6 x 70, 8.8, M6x70
6	743320	2	SUPPORT, {PP:80743320}
7	457547	4	CLAMP, {PP:80457547}
8	84435656	1	SUPPORT,
9	353308	4	NUT, LOCK, M6 x 1, Cl 8,
10	84334651	1	TUBE, HYD,
11	457544	1	CONNECTOR, HYD., {PP:80457544}
12	382527	2	CLAMP, HOSE, {PP:80382527}
13	9835285	1	HOSE, {PP:89835285}
14	84435539	1	BRACKET,
15	457546	4	CLAMP, {PP:80457546}
16	743318	2	SUPPORT, {PP:80743318}
17	84320648	1	HOSE, FLEXIBLE,
18	9511017	2	HOSE, {PP:89511017}
19	396718	3	STRAP, {PP:80396718}
20	9507672	1	CONNECTION, 3 WAY, {PP:89507672}
21	9511910	1	CONNECTOR, HYD., {PP:89511910} (22), FOR CS520, CS540, CS640 ONLY, FOR HYDROSTATIC DRIVE 100CC/100CC ONLY, FOR HYDROSTATIC DRIVE 75CC/100CC ONLY
21	9818287	1	CONNECTOR, HYD., {PP:89818287} (22), FOR CS660 ONLY, FOR CL560 ONLY, FOR HYDROSTATIC DRIVE 130CC/100CC ONLY
22	167266	1	O-RING, 12-1, 90 Duro, .924 ID x .116" Thk,
23	89811842	1	CONNECTOR, HYD., , FOR HYDROSTATIC DRIVE 130CC/100CC ONLY, FOR CL560 ONLY, FOR CS540, CS640, CS660 ONLY, FOR HYDROSTATIC DRIVE 100CC/100CC ONLY
23	89818935	1	CONNECTOR, HYD., , FOR CS520 ONLY, FOR HYDROSTATIC DRIVE 75CC/100CC ONLY
24	84074158	1	THERMOSTAT,
25	84334647	1	TUBE, HYD,
26	367681	4	PLATE, FIXING, {PP:80367681}

07.221(01) HYDROSTATIC LINES

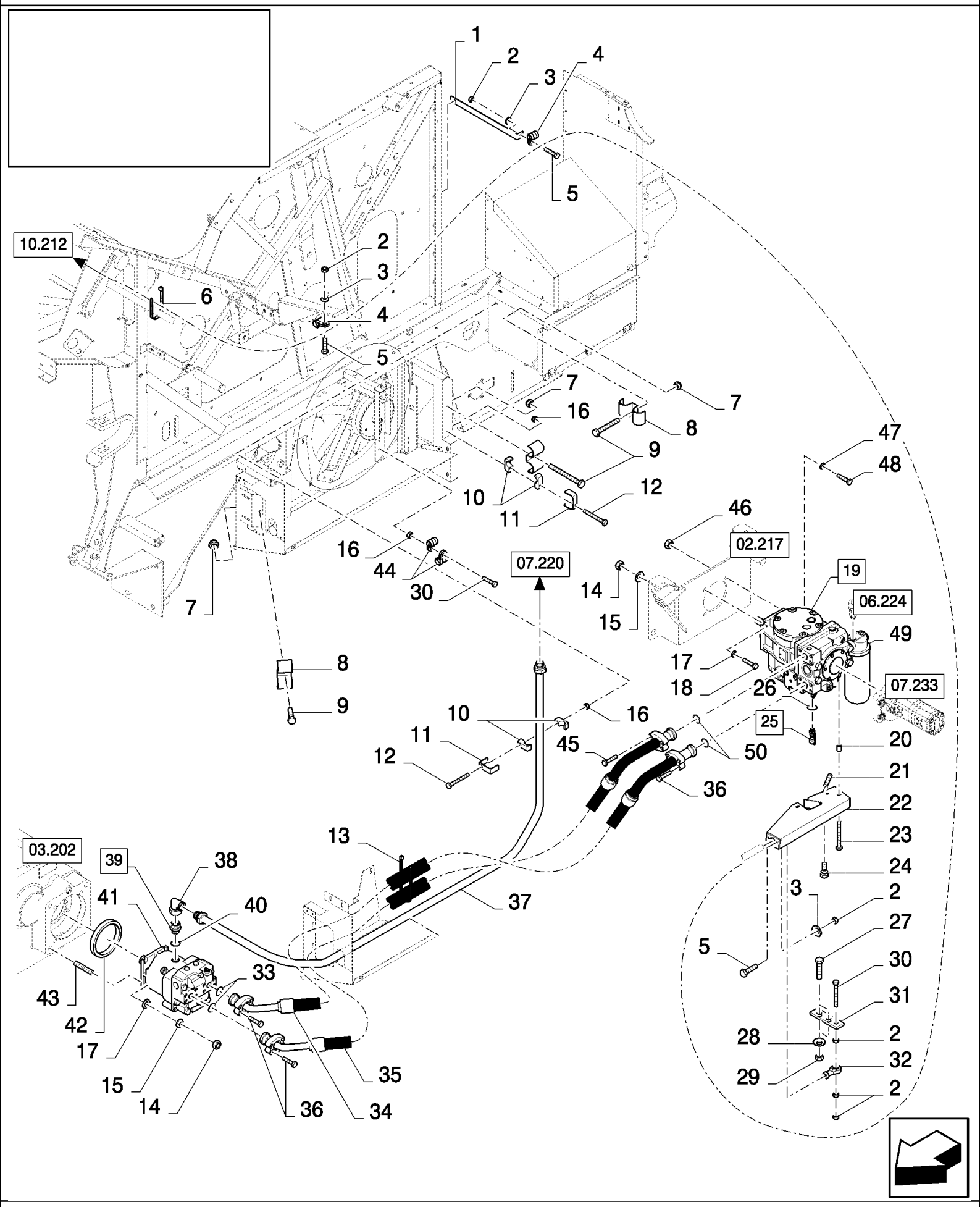

07.221(01) HYDROSTATIC LINES

ссылка	Номер детали	Кол-во	Описание
1	84435557	1	SUPPORT,
2	15896221	7	NUT, M6, Cl 10,
3	322357	4	WASHER, SPRING, Belleville, M6,
4	335021	2	CLAMP, {PP:80335021}
5	120100	4	BOLT, Hex, M6 x 20, 8.8,
6	323597	2	STRAP, CABLE, {PP:80323597}
7	86629542	3	NUT, LOCK, M8 x 1.25, Cl 8,
8	84435979	3	CLAMP,
9	86977784	3	SCREW, M8x60
10	457546	4	CLAMP, {PP:80457546}
11	743318	2	SUPPORT, {PP:80743318}
12	86508569	2	BOLT, Hex, M6 x 70, 8.8, M6x70
13	396718	2	STRAP, {PP:80396718}
14	9706685	8	NUT, M12, Cl 8,
15	140046	8	WASHER, SPRING, Belleville, M12,
16	353308	5	NUT, LOCK, M6 x 1, Cl 8,
17	140086	8	WASHER, {PP:80140086} 14MM
18	86629541	4	BOLT, Hex, M12 x 40, 8.8, Full Thd, , FOR HYDROSTATIC DRIVE 75CC/100CC ONLY, FOR HYDROSTATIC DRIVE 100CC/100CC ONLY, FOR CS520, CS540, CS640 ONLY
19	84400367	1	PUMP, HYDROSTATIC, (49), FOR HYDROSTATIC DRIVE 100CC/100CC ONLY, NO SUBPARTS YET AVAILABLE, FOR CS540, CS640 ONLY
19	84607543	1	PUMP, HYDROSTATIC, (49), FOR HYDROSTATIC DRIVE 75CC/100CC ONLY, NO SUBPARTS YET AVAILABLE, FOR CS520 ONLY
19	84607544	1	PUMP, HYDROSTATIC, (49), NO SUBPARTS YET AVAILABLE, FOR CS660 ONLY, FOR HYDROSTATIC DRIVE 130CC/100CC ONLY
19	84800526	1	PUMP, HYDROSTATIC, (49), FOR HYDROSTATIC DRIVE 130CC/100CC ONLY, FOR CL560 ONLY, NO SUBPARTS YET AVAILABLE
20	9837216	3	RING, {PP:89837216}
21	84076895	1	SET SCREW, Hex Soc, M10 x 50,
22	84433228	1	SUPPORT,
23	89850685	3	SCREW, M6x90
24	412665	1	SCREW, {PP:80412665}
25	84021707	1	CONNECTOR, HYD., (26)
26	9617873	1	O-RING, 6-1, 90 Duro, .468" ID x .078" Thk,
27	43127	2	BOLT, Hex, M8 x 25, 8.8,
28	322358	2	WASHER, SPRING, Belleville, M8,
29	89706690	2	NUT, M8, Cl 8,
30	120102	2	BOLT, Hex, M6 x 40, 8.8, Full Thd, , BSN C487
30	120102	1	BOLT, Hex, M6 x 40, 8.8, Full Thd, , ASN D488
30	120101	1	BOLT, Hex, M6 x 30, 8.8, Full Thd, , ASN D488
31	89819078	1	LEVER,
32	750157	1	BALL JOINT,
33	353108	2	O-RING, -219, 70 Duro, 1.296" ID x .139" Thk,
34	84320589	1	HOSE, FLEXIBLE, , FOR HYDROSTATIC DRIVE 100CC/100CC ONLY, FOR CS520, CS540, CS640 ONLY, FOR HYDROSTATIC DRIVE 75CC/100CC ONLY

07.221(01) HYDROSTATIC LINES

ссылка	Номер детали	Кол-во	Описание
34	84447588	1	HOSE, FLEXIBLE, , FOR CS660 ONLY, FOR HYDROSTATIC DRIVE 130CC/100CC ONLY
34	84458918	1	HOSE, FLEXIBLE, , FOR HYDROSTATIC DRIVE 130CC/100CC ONLY, FOR CL560 ONLY
35	84320588	1	HOSE, FLEXIBLE, , FOR HYDROSTATIC DRIVE 75CC/100CC ONLY, FOR CS520, CS540, CS640 ONLY, FOR HYDROSTATIC DRIVE 100CC/100CC ONLY
35	84447589	1	HOSE, FLEXIBLE, , FOR CS660 ONLY, FOR HYDROSTATIC DRIVE 130CC/100CC ONLY
35	84458919	1	HOSE, FLEXIBLE, , FOR HYDROSTATIC DRIVE 130CC/100CC ONLY, FOR CL560 ONLY
36	84015552	AR	BOLT, Hex, 7/16"-14 x 1/2", 12.9,
37	84433034	1	TUBE, HYD,
37	84458920	1	TUBE, HYD, , FOR CL560 ONLY, FOR HYDROSTATIC DRIVE 130CC/100CC ONLY
38	457573	1	ELBOW,
39	9511910	1	CONNECTOR, HYD., (40)
40	167266	1	O-RING, 12-1, 90 Duro, .924 ID x .116" Thk,
41	84400365	1	MOTOR, HYDROSTATIC, , NO SUBPARTS YET AVAILABLE, BSN C375
41	84800587	1	MOTOR, HYDROSTATIC, , NO SUBPARTS YET AVAILABLE, ASN D376
42	84071765	1	RING,
43	9501647	4	STUD, , FOR HYDROSTATIC DRIVE 100CC/100CC ONLY, FOR CS540, CS640 ONLY, BSN C415
43	84818315	4	STUD, , FOR CS540, CS640 ONLY, FOR HYDROSTATIC DRIVE 100CC/100CC ONLY, ASN D416
43	84818315	4	STUD, , FOR HYDROSTATIC DRIVE 75CC/100CC ONLY, FOR CS520 AND CS660 ONLY, FOR HYDROSTATIC DRIVE 130CC/100CC ONLY, FOR CL560 ONLY
44	84053873	2	CLAMP,
45	84015554	8	BOLT, Hex, 1/2"-13 x 1 3/4", 12.9, , FOR CL560 ONLY, FOR HYDROSTATIC DRIVE 130CC/100CC ONLY, FOR CS660 ONLY
46	100020	4	NUT, M16, Cl 8, , FOR CS660 ONLY, FOR HYDROSTATIC DRIVE 130CC/100CC ONLY, FOR CL560 ONLY
47	84058945	4	WASHER, , FOR CL560 ONLY, FOR HYDROSTATIC DRIVE 130CC/100CC ONLY, FOR CS660 ONLY
48	120090	4	BOLT, Hex, M16 x 50, 8.8, , FOR CS660 ONLY, FOR HYDROSTATIC DRIVE 130CC/100CC ONLY, FOR CL560 ONLY
49	84031880	1	FILTER, ELEMENT,
50	353108	2	O-RING, -219, 70 Duro, 1.296" ID x .139" Thk, , FOR HYDROSTATIC DRIVE 75CC/100CC ONLY, FOR HYDROSTATIC DRIVE 100CC/100CC ONLY
50	14464080	2	O-RING, -222, 70 Duro, 1.484" ID x .139" Thk, , FOR HYDROSTATIC DRIVE 130CC/100CC ONLY

07.222(01) STEERING VALVE

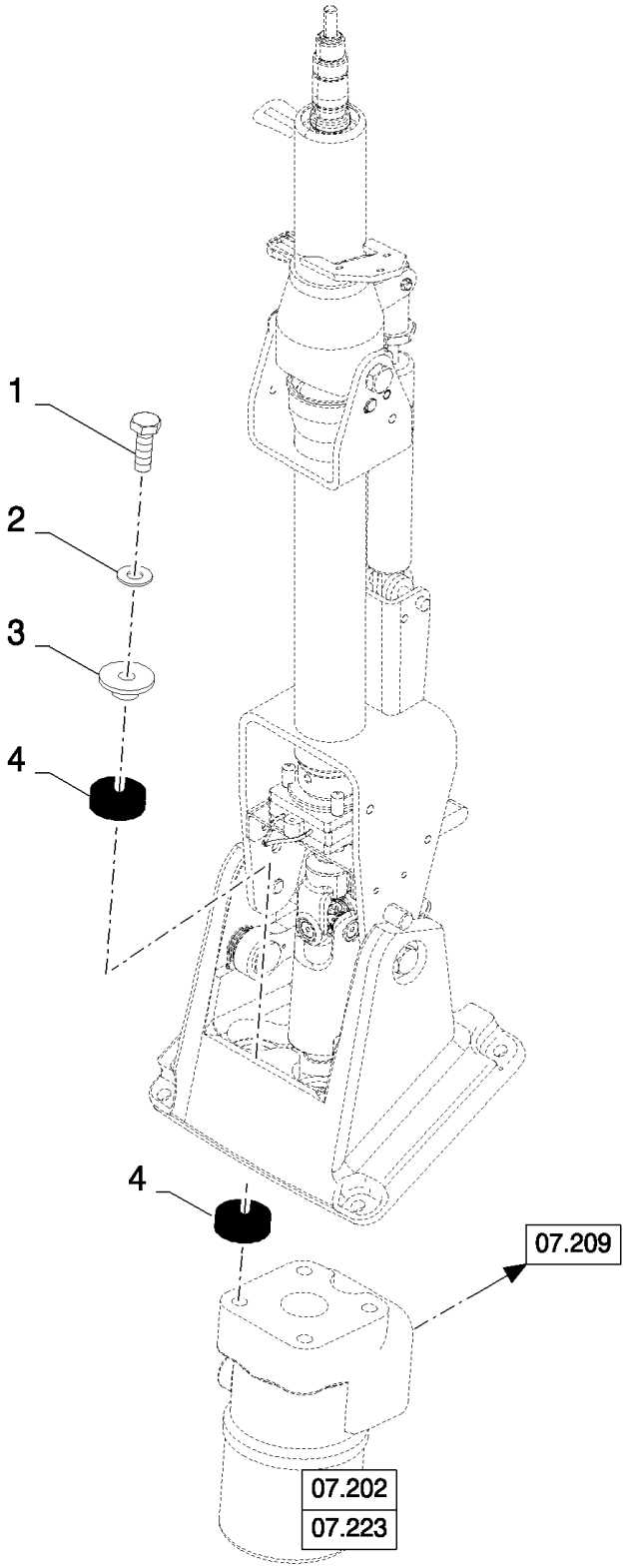

07.222(01) STEERING VALVE

ссылка	Номер детали	Кол-во	Описание
1	43140	4	BOLT, Hex, M10 x 30, 8.8, Full Thd, , BSN C363
1	412479	4	BOLT, Hex, M8 x 35, 8.8, , BSN F364427
1	9706704	4	BOLT, Hex, M10 x 35, 8.8, Full Thd, , ASN D428
2	140045	4	WASHER, SPRING, Belleville, M10,
3	89819785	4	FLANGE, , BSN C363
3	84819581	4	FLANGE, , ASN D364
4	89514935	4	SHOCK ABSORBER, , BSN C363
4	84819582	8	DAMPER, , ASN D364

07.223(01) STEERING VALVE - FOR FIXED AND POWERED REAR AXLE

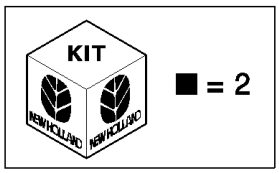

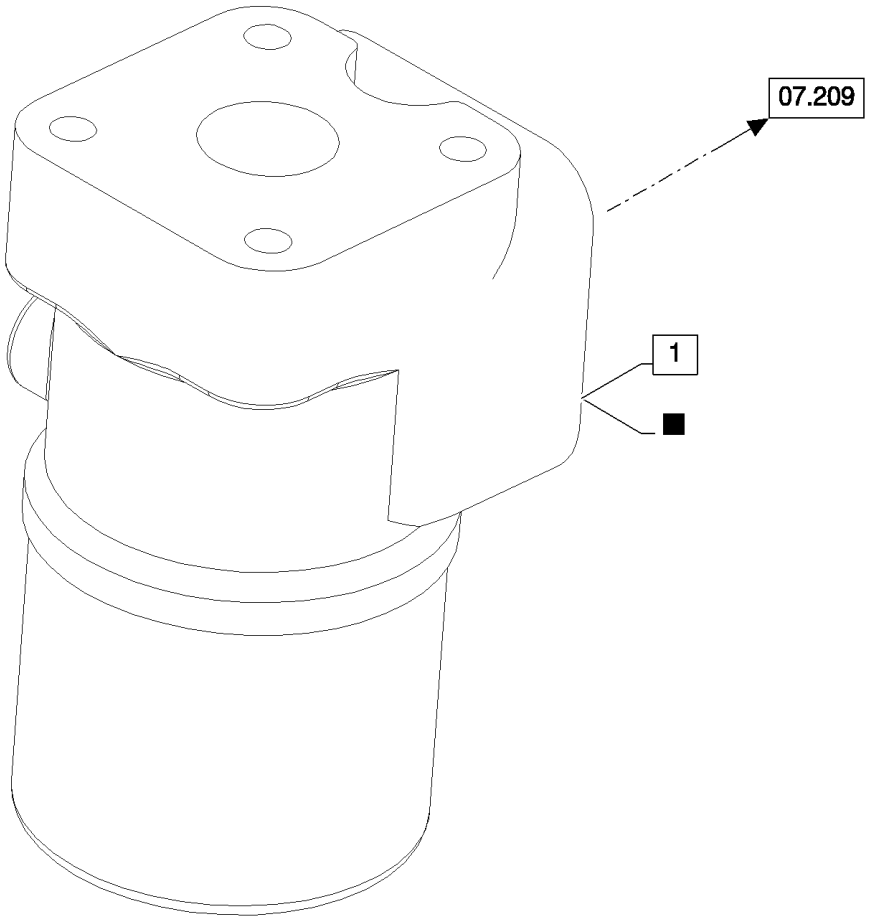

07.223(01) STEERING VALVE - FOR FIXED AND POWERED REAR AXLE

ссылка	Номер детали	Кол-во	Описание
1	84607016	1	VALVE, HYDRAULIC, (2), FOR CS520, CS540, CS640, CS660 ONLY, BSN C423
1	84458935	1	VALVE, HYDRAULIC, (2), FOR CS520, CS540, CS640, CS660 ONLY, ASN D424
1	84458070	1	SERVOSTEERING, (2), FOR CL560 ONLY
2	84053469	1	KIT, SEALS,

07.224(01) ADDITIONAL CYLINDER, STRAW ELEVATOR

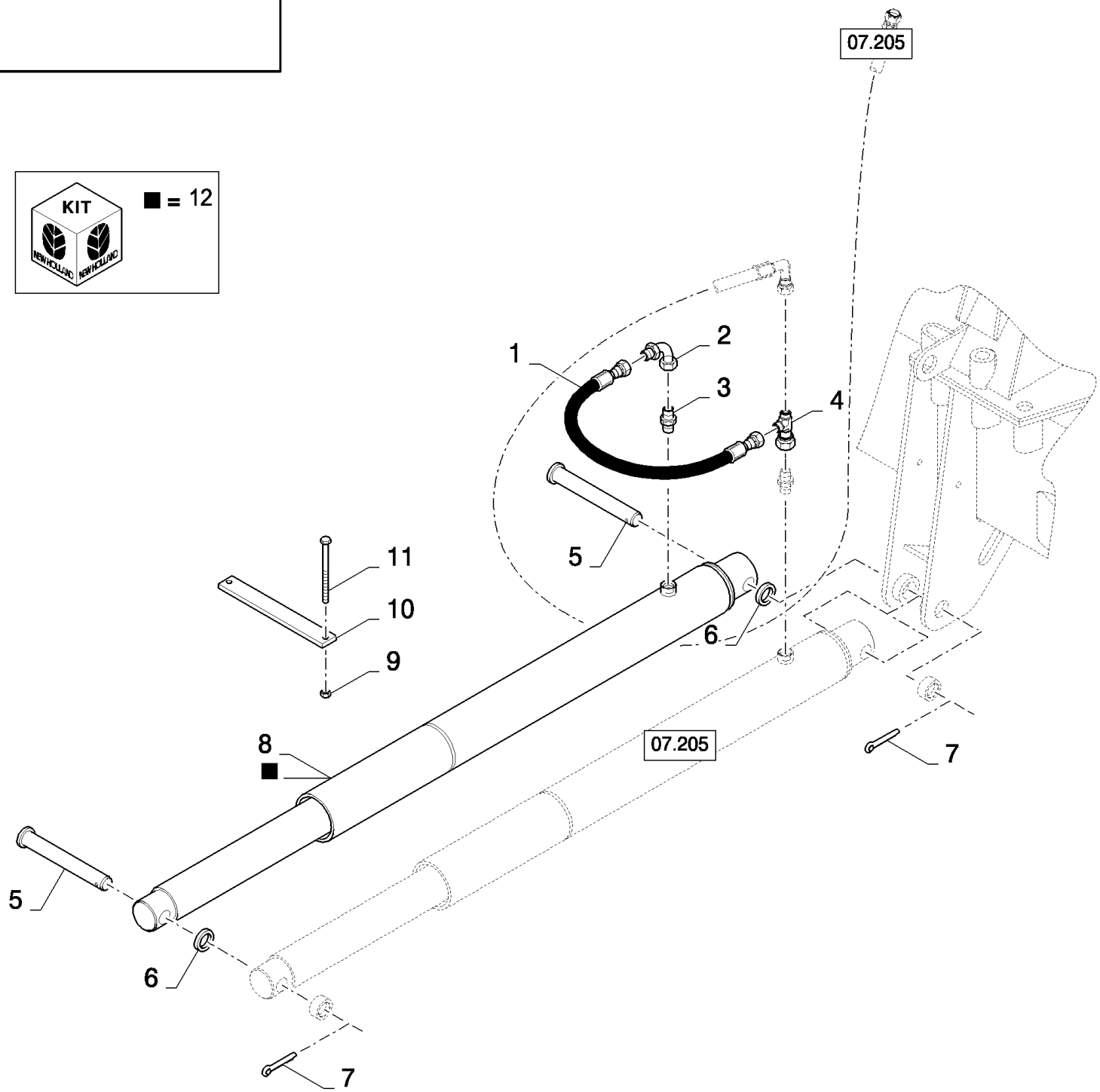

CS660 COMBINE BASE UNIT (1/03-) - Hydraulic System

07.224(01) ADDITIONAL CYLINDER, STRAW ELEVATOR

ссылка	Номер детали	Кол-во	Описание
1	9833953	1	HOSE, {PP:89833953}
2	9508529	1	ELBOW, {PP:89508529}
3	395782	1	CONNECTOR, HYD., {PP:80395782}
4	84455036	1	CONNECTION, 3 WAY,
5	84440399	2	PIN,
6	84071288	2	WASHER,
7	300423	2	PIN, SPLIT (COTTER), {PP:80300423} M6.3 x 50,
8	84444496	1	CYLINDER, (12)
9	100037	2	NUT, M10 x 1.5, Cl 8,
10	84440400	2	BRACKET,
11	86508573	2	BOLT, Hex, M10 x 110, 8.8, M10x110
12	84807313	1	KIT, SEALS,

07.225(01) VALVES, HYDRAULIC

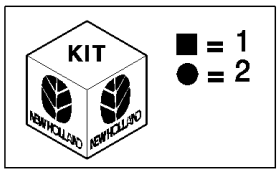

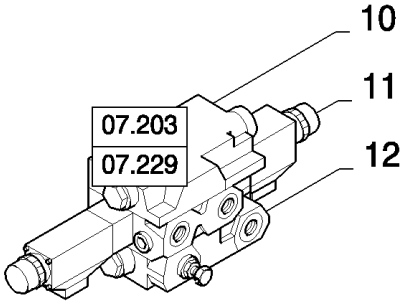

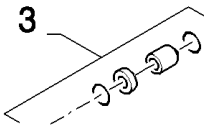

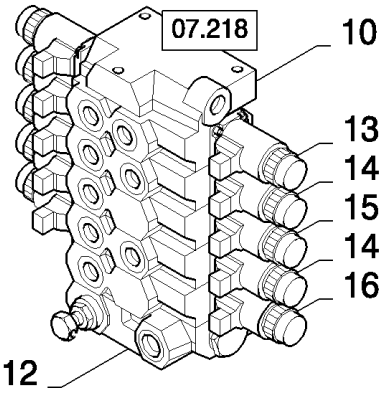

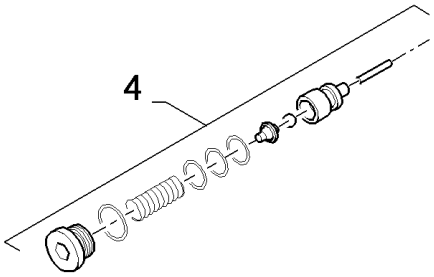

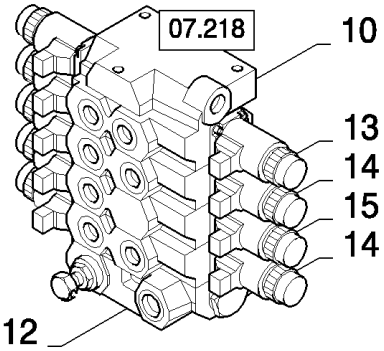

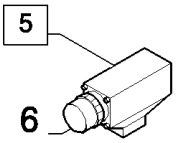

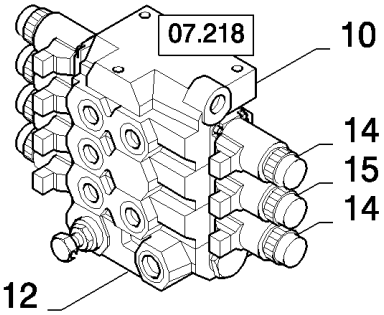

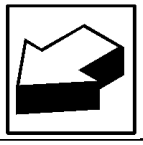

CS660 COMBINE BASE UNIT (1/03-) - Hydraulic System

07.225(01) VALVES, HYDRAULIC

ссылка	Номер детали	Кол-во	Описание
1	84014433	AR	KIT, SEALS, , INCLUDES ALSO SEALS BETWEEN VALVES
2	84014431	AR	KIT, SEALS,
3	84014434	AR	KIT, REPAIR,
4	84039229	AR	KIT, REPAIR,
5	84062114	AR	ELECTROMAGNET, PROP (6)
5	84062113	AR	ELECTROMAGNET, ON/OFF (6)
6	84429046	AR	PROTECTION CAP,
10	84022625	AR	VALVE, HYDRAULIC,
11	84053376	AR	VALVE, HYDRAULIC, (1,3,4,5)
12	84023001	AR	VALVE SEAT, (2)
13	84053377	AR	VALVE, HYDRAULIC, (1,3,5)
14	84053380	AR	VALVE, HYDRAULIC, (1,3,5)
15	84053379	AR	VALVE, HYDRAULIC, (1,3,4,5)
16	84400091	AR	(1,3,5)

SHEET METAL/DECALS	**REVÊTEMENTS EN TÔLE DÉCALCOMANIE**	**CHAPEADOS/CALCOMANÍAS**	**METALPLADEBEKLÆDN. MÆRKATER**
LAMIERATI DECALCOMANIE	**BLECHVERKLEIDUNGEN ABZIEHBILDER**	**REVESTIMENTOS EM CHAPAS/DECALCOMANIAS**	**METALEN PLATEN PLAKPLAATJES**

SEC. 8

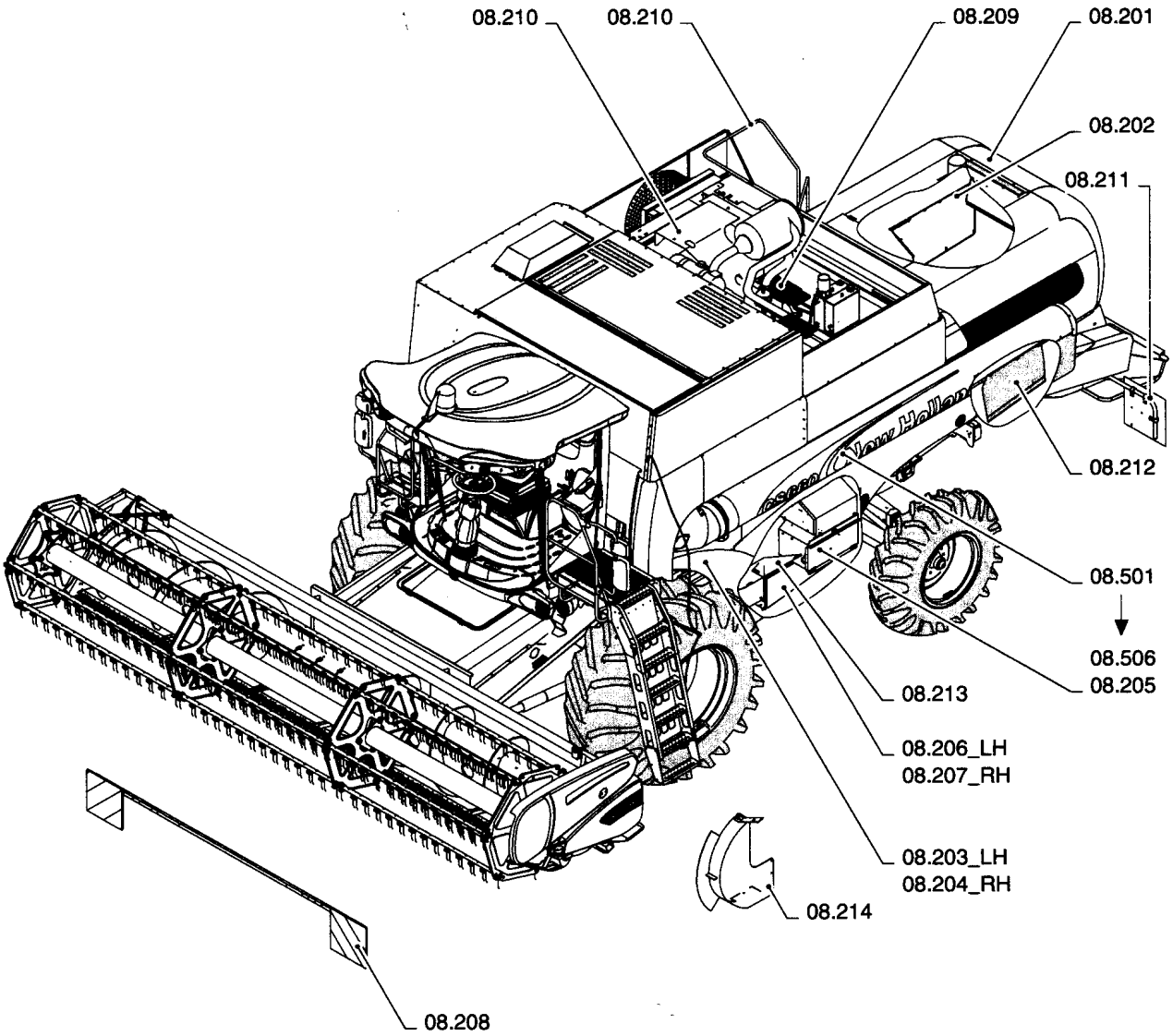

08.000(01) SECTION LIST 8

ссылка	Номер детали	Кол-во	Описание

08.201(01) STRAW HOOD

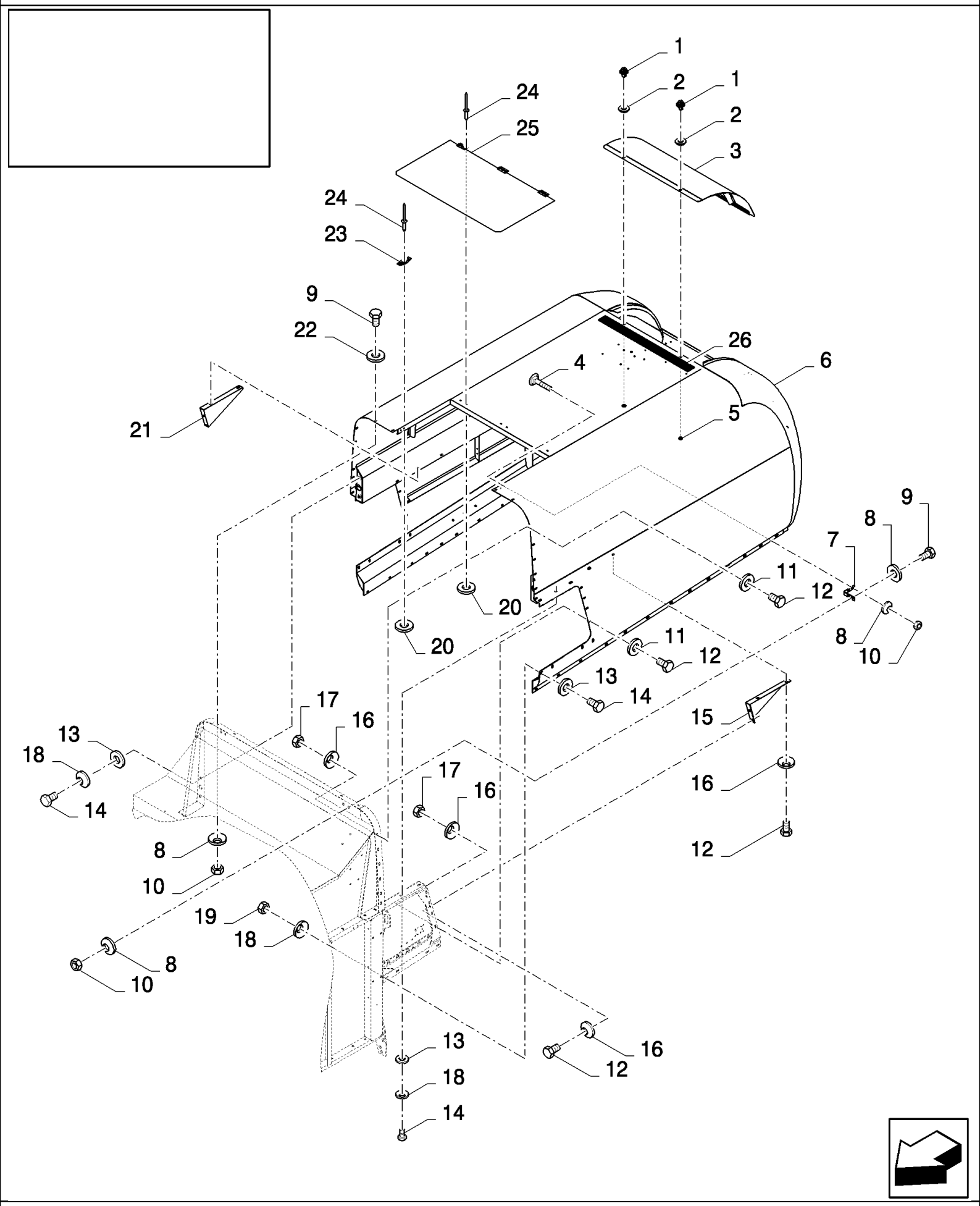

CS660 COMBINE BASE UNIT (1/03-) - Sheet Metal/Decals

08.201(01) STRAW HOOD

ссылка	Номер детали	Кол-во	Описание
1	89514603	2	LOCK,
2	140018	2	WASHER, M12 x 24 x 2.5,
3	84438635	1	COVER, , FOR CL560 ONLY, FOR CS520, CS540 ONLY
3	84438653	1	COVER, , FOR CS640, CS660 ONLY
4	9706703	4	BOLT, CARRIAGE, Short NK, M6 x 20, Cl8.8, Full Thd,
5	9514605	2	RING, LOCKING, {PP:89514605}
6	84434337	1	HOOD, STRAW, , FOR CS520, CS540 ONLY, FOR CL560 ONLY
6	84077547	1	HOOD, STRAW, , FOR CS640, CS660 ONLY
7	84433220	2	BRACKET,
8	322357	16	WASHER, SPRING, Belleville, M6,
9	120100	8	BOLT, Hex, M6 x 20, 8.8,
10	15896221	12	NUT, M6, Cl 10,
11	140041	20	WASHER, M8 x 28 x 3,
12	120104	28	BOLT, Hex, M8 x 20, 8.8,
13	140042	18	WASHER, M10 x 34 x 3,
14	43139	18	SCREW, {PP:80043139} M10x25
15	84077198	1	PLATE,
16	322358	28	WASHER, SPRING, Belleville, M8,
17	89706690	20	NUT, M8, Cl 8,
18	140045	18	WASHER, SPRING, Belleville, M10,
19	100016	8	NUT, M10, Cl 8,
20	335872	AR	WASHER, {PP:80335872} 4MM
21	84077195	1	PLATE,
22	140040	4	WASHER, M6 x 22 x 2,
23	362786	2	FASTENER, {PP:80362786}
24	NS	AR	NOT SERVICED, Rivet
25	84437995	1	COVER, , FOR CS520, CS540 ONLY, FOR CL560 ONLY
25	84077082	1	COVER, , FOR CS640, CS660 ONLY
26	401502	AR	STRIP, ANTI-SKID, {PP:80401502} 51mm x 18.3 Roll - Cut to Size

08.202(01) STRAW HOOD, PLATES FOR STRAWCHOPPER

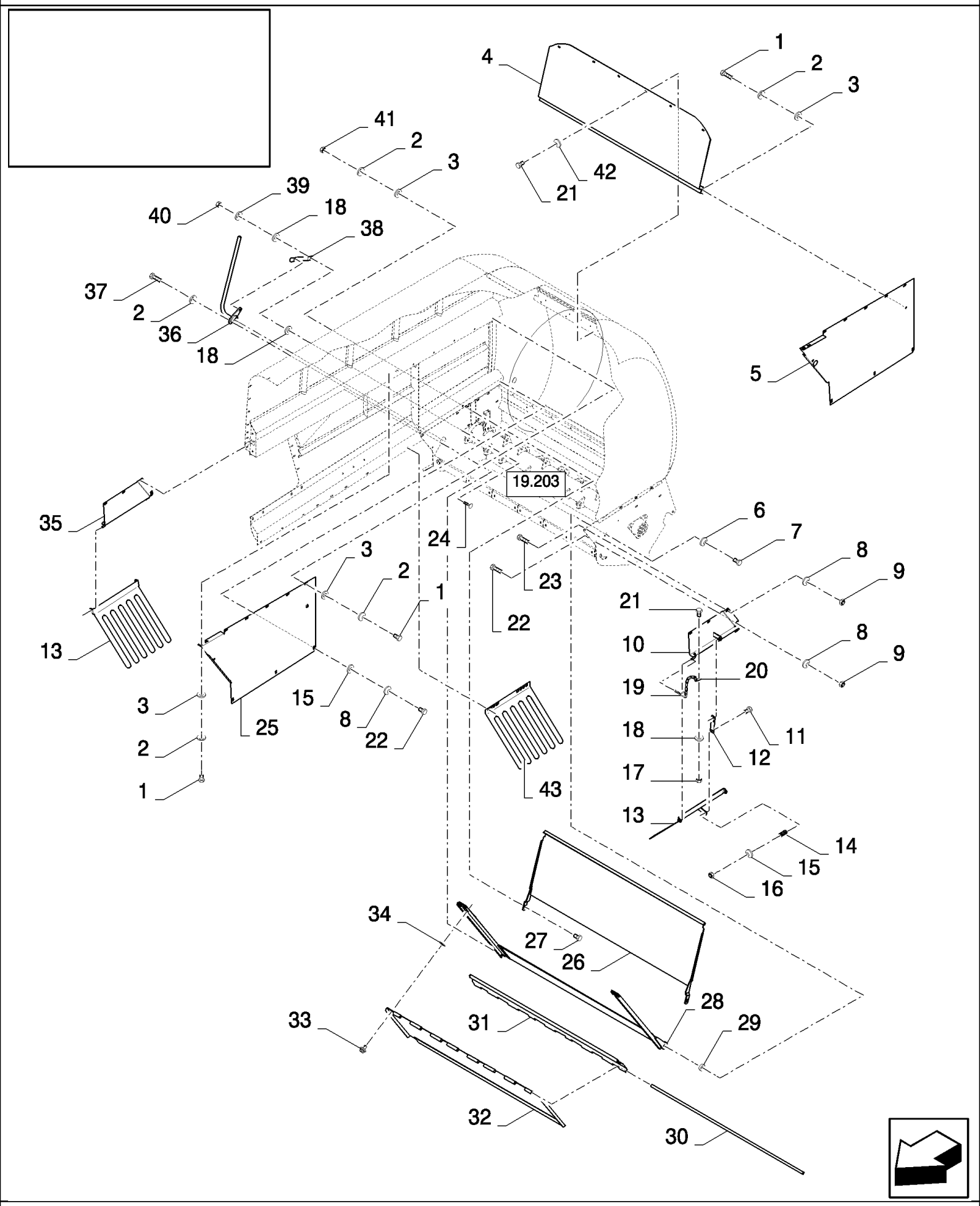

CS660 COMBINE BASE UNIT (1/03-) - Sheet Metal/Decals

08.202(01) STRAW HOOD, PLATES FOR STRAWCHOPPER

ссылка	Номер детали	Кол-во	Описание
1	120104	16	BOLT, Hex, M8 x 20, 8.8,
2	322358	20	WASHER, SPRING, Belleville, M8,
3	140041	18	WASHER, M8 x 28 x 3,
4	84434539	1	DEFLECTOR, , FOR CL560 ONLY, FOR CS520, CS540 ONLY
4	84434841	1	DEFLECTOR, , FOR CS640, CS660 ONLY
5	84434246	1	PLATE,
6	140048	1	WASHER, SPRING, Belleville, M16,
7	43167	1	BOLT, Hex, M16 x 30, 8.8, Full Thd,
8	140045	14	WASHER, SPRING, Belleville, M10,
9	100016	8	NUT, M10, Cl 8,
10	84433778	1	SUPPORT,
11	325829	2	BOLT, {PP:80325829} Hex, M10 x 45, 8.8, M10x45
12	84434208	2	BRACKET,
13	84433715	2	RAKE,
14	180072	2	SPRING, {PP:80180072}
15	140017	8	WASHER, M10 x 20 x 2,
16	100037	2	NUT, M10 x 1.5, Cl 8,
17	15896221	4	NUT, M6, Cl 10,
18	9824259	6	WASHER, M6 x 12 x 1.6,
19	370539	4	PIN, SPLIT (COTTER), {PP:80370539}
20	89839041	4	CHAIN,
21	86508568	AR	BOLT, Hex, M6 x 16, 8.8,
22	43138	8	BOLT, Hex, M10 x 20, 8.8, Full Thd,
23	338949	6	BOLT, CARRIAGE, Short NK, M10 x 25, Cl8.8, Full Thd,
24	374891	1	BOLT, CARRIAGE, Short NK, M6 x 25, Cl8.8, Full Thd,
25	84434345	1	PLATE,
26	84434533	1	DEFLECTOR, , FOR CS520, CS540 ONLY, FOR CL560 ONLY
26	84434844	1	DEFLECTOR, , FOR CS640, CS660 ONLY
27	43465	2	BOLT, CARRIAGE, Short NK, M8 x 30, Cl8.8, Full Thd,
28	84439337	1	DEFLECTOR, , FOR CS520, CS540 ONLY, FOR CL560 ONLY
28	84439336	1	DEFLECTOR, , FOR CS640, CS660 ONLY
29	84444700	1	BUSHING,
30	84439351	1	TUBE, , FOR CS520, CS540 ONLY, FOR CL560 ONLY
30	84439312	1	TUBE, , FOR CS640, CS660 ONLY
31	84441463	1	DEFLECTOR, , FOR CS520, CS540 ONLY, FOR CL560 ONLY
31	84441462	1	DEFLECTOR, , FOR CS640, CS660 ONLY
32	84439358	1	DEFLECTOR, , FOR CS520, CS540 ONLY, FOR CL560 ONLY
32	84439346	1	DEFLECTOR, , FOR CS640, CS660 ONLY
33	89514603	2	LOCK,
34	9514605	2	RING, LOCKING, {PP:89514605}
35	84433929	1	SUPPORT,
36	84434503	1	LEVER,
37	43128	2	BOLT, Hex, M8 x 30, 8.8,
38	84440371	1	CLIP,
39	322357	1	WASHER, SPRING, Belleville, M6,

08.202(01) STRAW HOOD, PLATES FOR STRAWCHOPPER

ссылка	Номер детали	Кол-во	Описание
40	353308	1	NUT, LOCK, M6 x 1, Cl 8,
41	89706690	2	NUT, M8, Cl 8,
42	412649	AR	WASHER, SPRING, Belleville, M6,
43	84448617	2	RAKE,

08.203(01) UPPER SHIELDS, LH

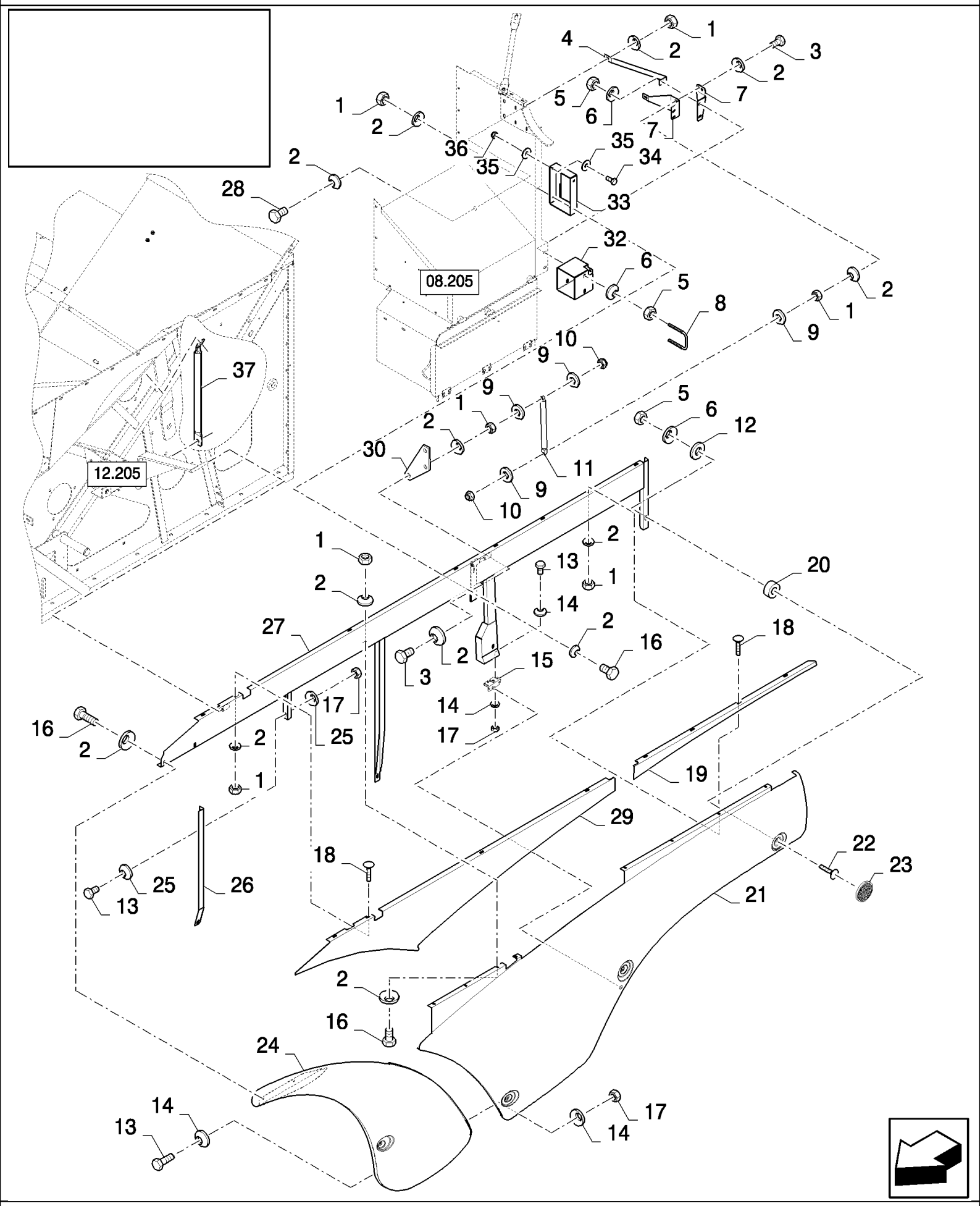

CS660 COMBINE BASE UNIT (1/03-) - Sheet Metal/Decals

08.203(01) UPPER SHIELDS, LH

ссылка	Номер детали	Кол-во	Описание
1	89706690	17	NUT, M8, Cl 8,
2	412650	28	WASHER, SPRING, Belleville, M8,
3	120107	2	BOLT, Hex, M8 x 50, 8.8, Full Thd,
4	84442726	1	BRACKET, , BSN C301
5	100016	8	NUT, M10, Cl 8,
6	140045	8	WASHER, SPRING, Belleville, M10,
7	84434052	1	SUPPORT, , BSN C301
7	84444995	1	SUPPORT, , ASN D302
8	84434067	1	U-BOLT,
9	86511315	4	WASHER, M8 x 16 x 1.6,
10	86629542	2	NUT, LOCK, M8 x 1.25, Cl 8,
11	84438915	1	GAS STRUT, , BSN C301
11	84982345	1	GAS STRUT, , ASN D302
12	86511323	4	WASHER, M10 x 20 x 2,
13	120100	9	BOLT, Hex, M6 x 20, 8.8,
14	322357	14	WASHER, SPRING, Belleville, M6,
15	84015292	1	LOCK,
16	43127	8	BOLT, Hex, M8 x 25, 8.8,
17	15896221	9	NUT, M6, Cl 10,
18	86507486	8	BOLT, CARRIAGE, Short NK, M8 x 20, Cl8.8, Full Thd,
19	84441289	1	SHIELD, , BSN C407
19	84457891	1	SHIELD, , ASN D408
20	84069986	1	BUSHING, , BSN C363
21	84434236	1	SHIELD, , BSN C363
21	84449841	1	GUARD, , ASN D364
22	V43471	4	BOLT, M10x20
23	435895	3	REFLECTOR, {PP:80435895}
24	84434162	1	SHIELD,
25	412649	4	WASHER, SPRING, Belleville, M6,
26	84434051	1	SUPPORT,
27	84433977	1	GUARD, , BSN C363
28	120104	1	BOLT, Hex, M8 x 20, 8.8,
29	84441318	1	SHIELD, , BSN C407
29	84457892	1	SHIELD, , ASN D408
30	84446270	1	SUPPORT, , BSN C323
30	84448505	1	SUPPORT, , ASN D324
31	43139	2	SCREW, {PP:80043139} M10x25
32	84430192	1	SUPPORT, , FOR CL560 ONLY
33	84430191	1	SUPPORT, , FOR CL560 ONLY
34	84430161	2	SCREW, M8x25, FOR CL560 ONLY
35	84430060	4	WASHER, 8MM, FOR CL560 ONLY
36	84430190	2	NUT, M8, FOR CL560 ONLY
37	84430216	1	SUPPORT, , FOR CL560 ONLY

08.204(01) UPPER SHIELDS, RH

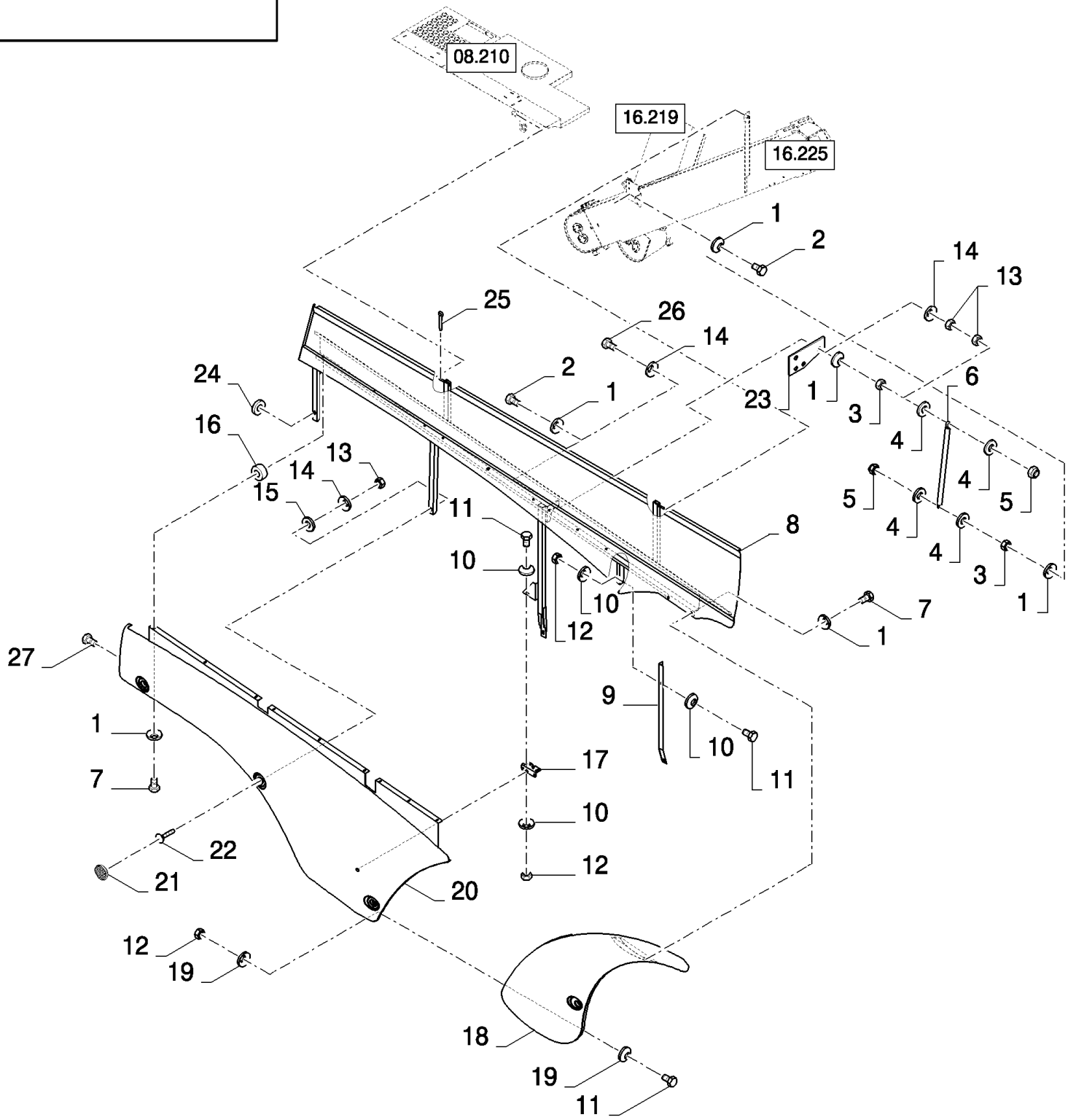

CS660 COMBINE BASE UNIT (1/03-) - Sheet Metal/Decals

08.204(01) UPPER SHIELDS, RH

ссылка	Номер детали	Кол-во	Описание
1	412650	15	WASHER, SPRING, {PP:80412650} Belleville, M8,
2	120107	2	BOLT, {PP:80120107} Hex, M8 x 50, 8.8, Full Thd,
2	120069	2	BOLT, {PP:80120069} Hex, M10 x 50, 8.8,
3	89706690	2	NUT, M8, Cl 8,
3	100016	2	NUT, {PP:80100016} M10, Cl 8,
4	86511315	4	WASHER, M8 x 16 x 1.6,
4	86511323	4	WASHER, M10 x 20 x 2,
5	86629542	2	NUT, LOCK, M8 x 1.25, Cl 8,
5	100037	2	NUT, {PP:80100037} M10 x 1.5, Cl 8,
6	84435138	1	GAS STRUT, , BSN C301
6	84435139	1	GAS STRUT, , ASN D302
7	43127	11	BOLT, {PP:80043127} Hex, M8 x 25, 8.8,
8	84434178	1	GUARD, , BSN C363
8	84449904	1	GUARD, , BSN F364407
8	84457890	1	GUARD, , ASN D408
9	84434092	1	SUPPORT,
10	412649	8	WASHER, SPRING, {PP:80412649} Belleville, M6,
11	120100	9	BOLT, {PP:80120100} Hex, M6 x 20, 8.8,
12	15896221	9	NUT, M6, Cl 10,
13	100016	4	NUT, {PP:80100016} M10, Cl 8,
14	140045	4	WASHER, SPRING, {PP:80140045} Belleville, M10,
15	86511325	4	WASHER, M14 x 28 x 2.5, 14MM
16	84069986	1	BUSHING,
17	84015292	1	LOCK,
18	84434171	1	SHIELD,
19	322357	10	WASHER, SPRING, {PP:80322357} Belleville, M6,
20	84434237	1	SHIELD, , BSN C363
20	84452088	1	SHIELD, , ASN D364
21	435895	3	REFLECTOR, {PP:80435895}
22	V43471	4	BOLT,
23	84446268	1	
24	84452058	1	BUSHING, , ASN D364
25	130007	2	PIN, SPLIT (COTTER), {PP:80130007} M4 x 25,
26	86977775	1	BOLT, Hex, M10 x 60, 8.8, Full Thd,
27	9706703	1	BOLT, CARRIAGE, {PP:89706703} Short NK, M6 x 20, Cl8.8, Full Thd,

08.205(01) TOOLBOX AND BATTERY SUPPORT

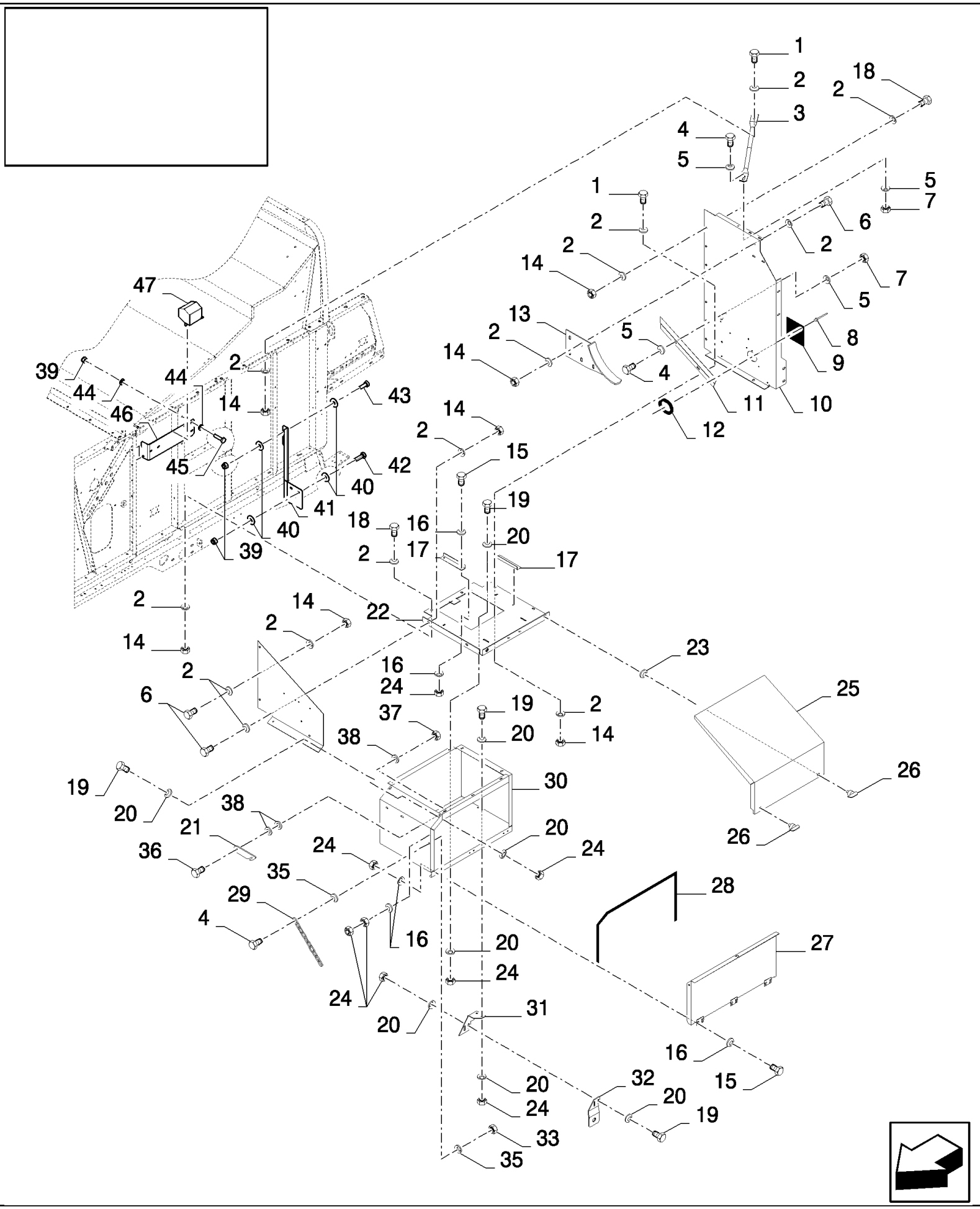

CS660 COMBINE BASE UNIT (1/03-) - Sheet Metal/Decals

08.205(01) TOOLBOX AND BATTERY SUPPORT

ссылка	Номер детали	Кол-во	Описание
1	43139	3	SCREW, {PP:80043139} M10x25
2	140045	43	WASHER, SPRING, Belleville, M10,
3	84435777	1	SUPPORT,
4	120104	7	BOLT, Hex, M8 x 20, 8.8,
5	322358	6	WASHER, SPRING, Belleville, M8,
6	43138	12	BOLT, Hex, M10 x 20, 8.8, Full Thd,
7	89706690	3	NUT, M8, Cl 8,
8	NS	5	NOT SERVICED, Rivet
9	84444207	1	CANVAS,
10	84442721	1	PLATE,
11	84443493	1	PLATE,
12	NS	1	NOT SERVICED, L=0.202M
13	84431932	1	PLATE,
14	100016	19	NUT, M10, Cl 8,
15	86508568	12	BOLT, Hex, M6 x 16, 8.8,
16	322357	22	WASHER, SPRING, Belleville, M6,
17	84431924	2	BRACKET,
18	43140	4	BOLT, Hex, M10 x 30, 8.8, Full Thd,
19	120100	13	BOLT, Hex, M6 x 20, 8.8,
20	412649	24	WASHER, SPRING, Belleville, M6,
21	84443520	1	HOOK,
22	84443573	1	PLATE, , BSN C375
22	84452314	1	PLATE, , ASN D376
23	9514605	2	RING, LOCKING, {PP:89514605}
24	15896221	25	NUT, M6, Cl 10,
25	84443482	1	COVER,
26	9831581	2	LOCK, {PP:89831581}
27	84443561	1	COVER,
28	401209	1	SEAL PROTECTION, {PP:80401209} L=1.160M
29	84058873	2	CHAIN,
30	84443549	1	BOX, BATTERY, , BSN C375
30	84452290	1	BOX, BATTERY, , ASN D376
31	84443536	1	BRACKET, , BSN C347
31	84448847	1	SUPPORT, , BSN F348383
31	84455279	1	SUPPORT, , ASN D384
32	84443563	1	BRACKET,
33	86629542	4	NUT, LOCK, M8 x 1.25, Cl 8,
34	84443467	1	PLATE, , BSN C375
34	84452313	1	PLATE, , ASN D376
35	140041	9	WASHER, M8 x 28 x 3,
36	9706703	2	BOLT, CARRIAGE, Short NK, M6 x 20, Cl8.8, Full Thd,
37	353308	2	NUT, LOCK, M6 x 1, Cl 8,
38	140040	6	WASHER, M6 x 22 x 2,
39	84430124	7	NUT, M10, FOR CL560 ONLY
40	84430215	10	WASHER, 10MM, FOR CL560 ONLY

CS660 COMBINE BASE UNIT (1/03-) - Sheet Metal/Decals

08.205(01) TOOLBOX AND BATTERY SUPPORT

ссылка	Номер детали	Кол-во	Описание
41	84430213	1	PLATE, COVER, , FOR CL560 ONLY
42	84430084	3	SCREW, M10x35, FOR CL560 ONLY
43	84430137	2	SCREW, M10x30, FOR CL560 ONLY
44	84430078	4	WASHER, 10MM, FOR CL560 ONLY
45	84430218	2	SCREW, M10x40, FOR CL560 ONLY
46	84430217	1	PLATE, COVER, , FOR CL560 ONLY
47	84430219	1	PLATE, , FOR CL560 ONLY

08.206(01) LOWER SHIELDS, LH

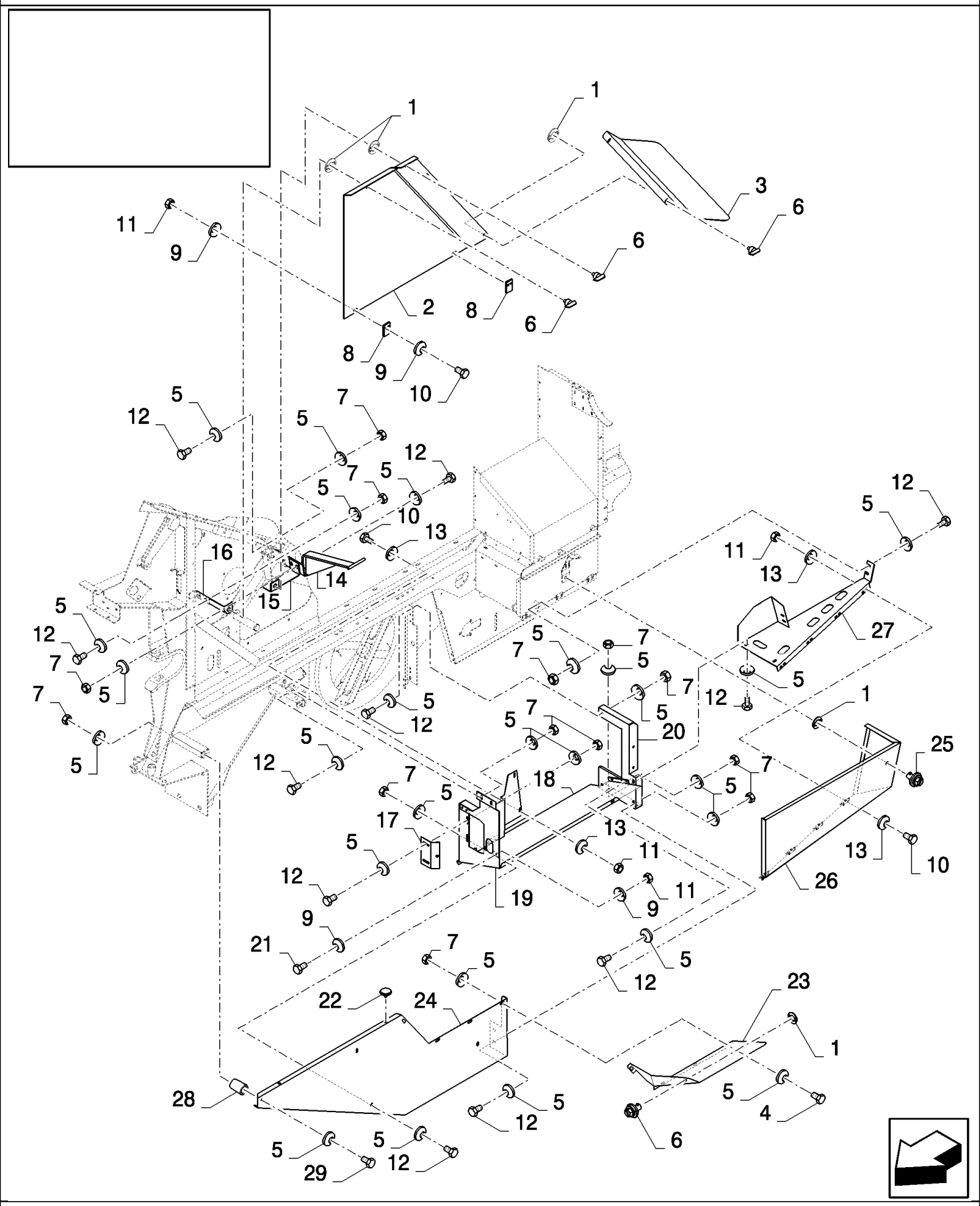

CS660 COMBINE BASE UNIT (1/03-) - Sheet Metal/Decals

08.206(01) LOWER SHIELDS, LH

ссылка	Номер детали	Кол-во	Описание
1	9514605	6	RING, LOCKING, {PP:89514605}
2	84443864	1	SHIELD,
3	84443632	1	SHIELD,
4	16043224	4	BOLT, Hex, M8 x 16, 8.8, Full Thd, , FOR CL560 ONLY
5	322358	62	WASHER, SPRING, Belleville, M8,
6	9831581	5	LOCK, {PP:89831581}
7	89706690	31	NUT, M8, Cl 8,
8	84334503	2	PLATE, PLASTIC,
9	322357	16	WASHER, SPRING, Belleville, M6,
10	120100	14	BOLT, Hex, M6 x 20, 8.8,
11	15896221	32	NUT, M6, Cl 10,
12	120104	25	BOLT, Hex, M8 x 20, 8.8,
13	412649	20	WASHER, SPRING, Belleville, M6,
14	84442801	1	SUPPORT,
15	84334692	1	SUPPORT,
16	84334691	1	SUPPORT,
17	84989564	1	BRACKET,
18	84989602	1	SHIELD,
18	84460465	1	PLATE, , FOR CL560 ONLY
19	84432078	1	SUPPORT,
19	84460464	1	PLATE, , FOR CL560 ONLY
20	84433042	1	SUPPORT,
21	86508568	4	BOLT, Hex, M6 x 16, 8.8,
22	331233	2	PLUG, {PP:80331233}
23	84443621	1	SHIELD,
24	84444602	1	SHIELD,
24	84460463	1	PLATE, , FOR CL560 ONLY
25	89514603	1	LOCK,
26	84989591	1	SHIELD,
27	84334671	1	PLATE,
27	84448548	1	PLATE, , FOR CL560 ONLY
28	84458653	1	BUSHING, SPLINED, , ASN D392
29	120104	2	BOLT, Hex, M8 x 20, 8.8, , BSN C391
29	120061	2	BOLT, Hex, M8 x 60, 8.8, , ASN D392
4	16043224	4	BOLT, Hex, M8 x 16, 8.8, Full Thd,

08.207(01) LOWER SHIELDS, RH

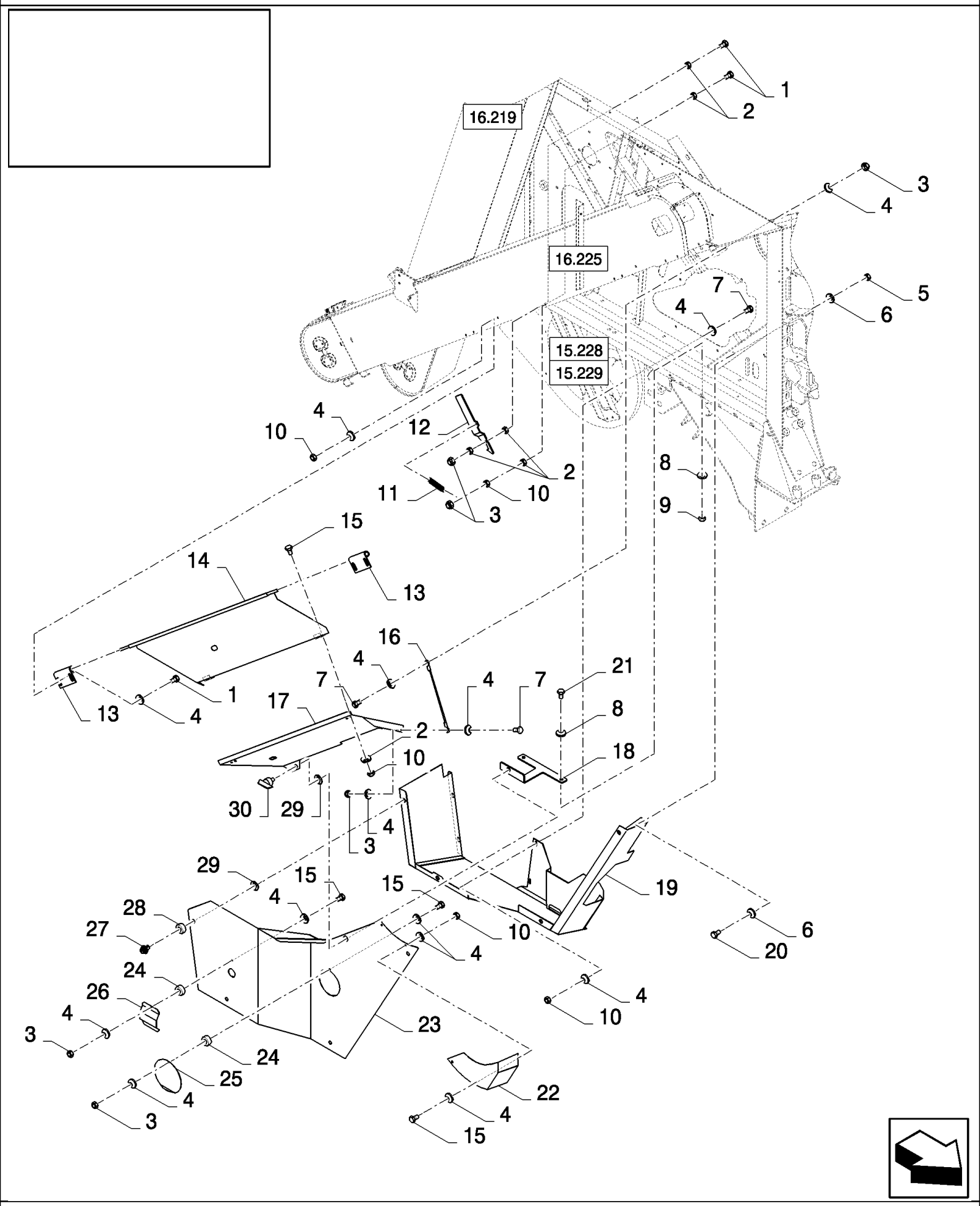

CS660 COMBINE BASE UNIT (1/03-) - Sheet Metal/Decals

08.207(01) LOWER SHIELDS, RH

ссылка	Номер детали	Кол-во	Описание
1	86977786	6	BOLT, Hex, M6 x 25, 8.8,
2	322357	9	WASHER, SPRING, Belleville, M6,
3	353308	7	NUT, LOCK, M6 x 1, Cl 8,
4	412649	30	WASHER, SPRING, Belleville, M6,
5	89706690	2	NUT, M8, Cl 8,
6	322358	4	WASHER, SPRING, Belleville, M8,
7	120100	7	BOLT, Hex, M6 x 20, 8.8,
8	140045	4	WASHER, SPRING, Belleville, M10,
9	100016	2	NUT, M10, Cl 8,
10	15896221	15	NUT, M6, Cl 10,
11	338713	1	SPRING, {PP:80338713}
12	84432889	1	BRACKET,
13	84989131	2	HINGE,
14	84989124	1	PLATE,
15	86508568	8	BOLT, Hex, M6 x 16, 8.8,
16	84440516	1	CHAIN,
17	84434497	1	PLATE, , BSN C375
17	84452610	1	PLATE, , ASN D376
18	84989110	1	PLATE,
19	84989119	1	PLATE,
19	84457040	1	PLATE, , FOR CL560 ONLY
20	43127	2	BOLT, Hex, M8 x 25, 8.8,
21	43140	2	BOLT, Hex, M10 x 30, 8.8, Full Thd,
22	84437696	1	PLATE,
23	84989105	1	PLATE, , BSN C375
23	84452611	1	PLATE, , ASN D376
24	86588450	2	WASHER, M6,
25	84437160	1	COVER,
26	84437668	1	COVER,
27	89514603	4	LOCK,
28	86511324	4	WASHER, M12 x 24 x 2.5,
29	9514605	5	RING, LOCKING, {PP:89514605} 12MM
30	9831581	1	LOCK, {PP:89831581}

08.208(01) SIGNAL PLATES

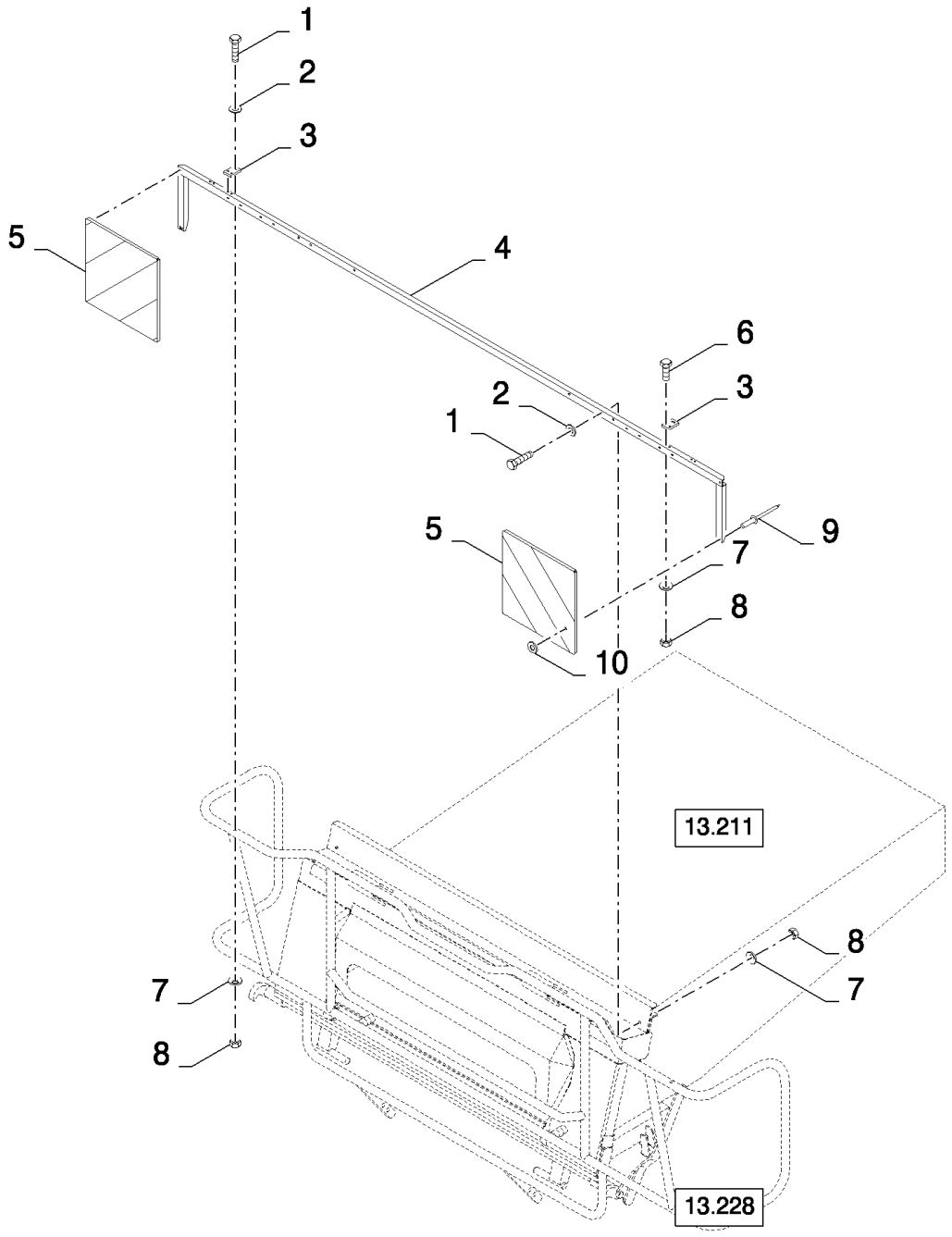

CS660 COMBINE BASE UNIT (1/03-) - Sheet Metal/Decals

08.208(01) SIGNAL PLATES

ссылка	Номер детали	Кол-во	Описание
1	43118	2	BOLT, Hex, M6 x 40, 8.8,
2	86588450	2	WASHER, M6,
3	84818296	2	SUPPORT,
4	9502877	1	SUPPORT, {PP:89502877}
5	84607381	2	PLATE,
6	86508568	4	BOLT, Hex, M6 x 16, 8.8,
7	322357	6	WASHER, SPRING, Belleville, M6,
8	15896221	6	NUT, M6, Cl 10,
9	NS	6	NOT SERVICED, RIVET
10	89824840	6	WASHER, 4MM

08.209(01) ENGINE GUARDS

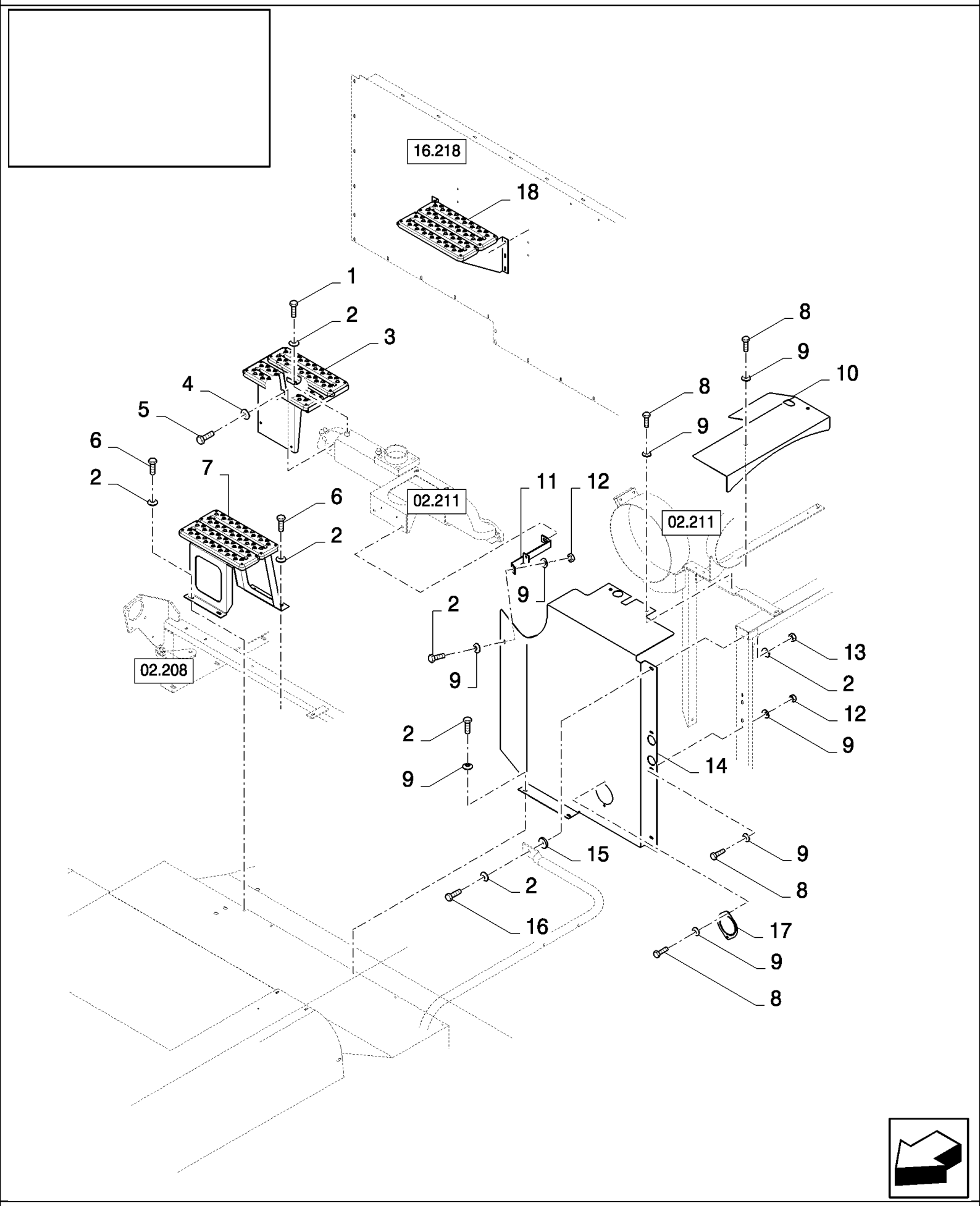

CS660 COMBINE BASE UNIT (1/03-) - Sheet Metal/Decals

08.209(01) ENGINE GUARDS

ссылка	Номер детали	Кол-во	Описание
1	16043224	2	BOLT, Hex, M8 x 16, 8.8, Full Thd,
1	16043224	2	BOLT, Hex, M8 x 16, 8.8, Full Thd,
2	322358	8	WASHER, SPRING, Belleville, M8,
3	84431301	1	STEP,
4	140045	1	WASHER, SPRING, Belleville, M10,
5	88011	1	BOLT, Hex, 3/8"-16 x 1 1/4", G5, Full Thd,
6	120104	4	BOLT, Hex, M8 x 20, 8.8,
7	84437276	1	STEP,
8	120100	12	BOLT, Hex, M6 x 20, 8.8,
9	412649	16	WASHER, SPRING, Belleville, M6,
10	84442804	1	SHIELD,
11	84444079	1	BRACKET, , BSN C479
11	84461458	1	SUPPORT ASSY., , ASN D480
12	15896221	4	NUT, M6, Cl 10,
13	89706690	1	NUT, M8, Cl 8,
14	84442818	1	SHIELD, , BSN C375
14	84452881	1	SHIELD, , ASN D376
15	9507949	1	WASHER, 9MM
16	43128	1	BOLT, Hex, M8 x 30, 8.8,
17	84334816	1	COVER, , BSN C479
18	84980712	1	STEP,

CS660 COMBINE BASE UNIT (1/03-) - Sheet Metal/Decals

08.210(01) ENGINE GUARDS AND PLATFORM LADDER

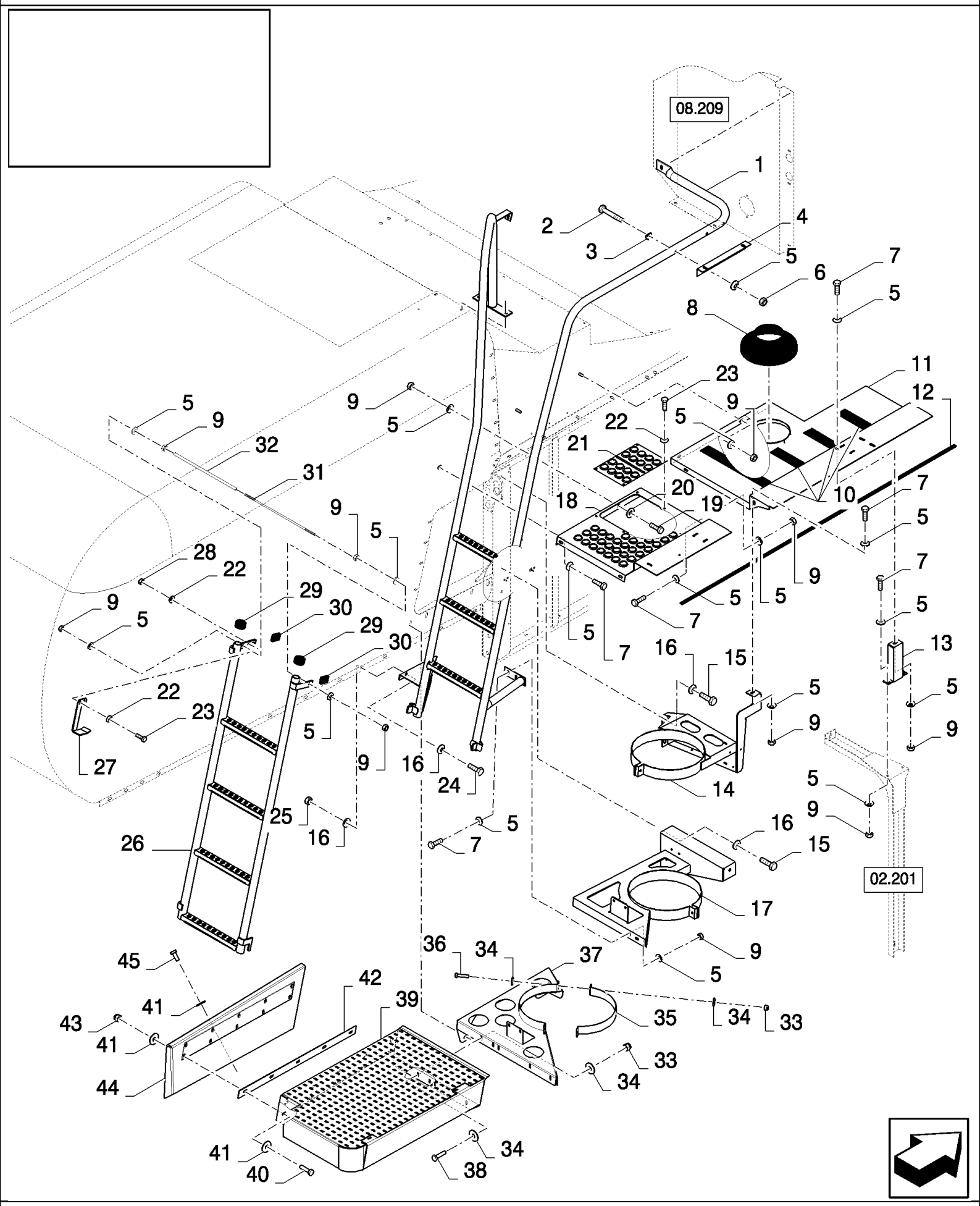

CS660 COMBINE BASE UNIT (1/03-) - Sheet Metal/Decals

08.210(01) ENGINE GUARDS AND PLATFORM LADDER

ссылка	Номер детали	Кол-во	Описание
1	84434486	1	LADDER, , FOR CS520, CS540 ONLY
1	84435877	1	LADDER, , FOR CS640, CS660 ONLY
1	84430123	1	HANDRAIL, , FOR CL560 ONLY
2	43130	2	BOLT, Hex, M8 x 50, 8.8,
3	333962	2	CLAMP, {PP:80333962}
4	84433718	1	BRACKET, , BSN C323
4	84449096	1	SUPPORT, , ASN D324
5	322358	28	WASHER, SPRING, Belleville, M8,
6	86629542	2	NUT, LOCK, M8 x 1.25, Cl 8,
7	120104	10	BOLT, Hex, M8 x 20, 8.8,
8	89501343	1	SEAL PROTECTION,
9	89706690	16	NUT, M8, Cl 8,
10	401502	AR	STRIP, ANTI-SKID, {PP:80401502} 51mm x 18.3 Roll - Cut to Size, FOR CL560 ONLY, FOR CS520, CS540 ONLY
10	401502	AR	STRIP, ANTI-SKID, {PP:80401502} 51mm x 18.3 Roll - Cut to Size, FOR CS640, CS660 ONLY
11	84433720	1	PLATFORM, , FOR CS520, CS540 ONLY, FOR CL560 ONLY
11	84435631	1	PLATFORM, , FOR CS640, CS660 ONLY
12	9504603	1	GASKET, {PP:89504603} L=1.41M
13	84433730	1	SUPPORT, , FOR CS520, CS540 ONLY, FOR CL560 ONLY
13	84437884	1	SUPPORT, , FOR CS640, CS660 ONLY
14	84434524	1	SUPPORT, , FOR CS520, CS540 ONLY, BSN C363
14	84449244	1	SUPPORT, , FOR CS520, CS540 ONLY, FOR CL560 ONLY, ASN D364
14	84434640	1	SUPPORT, , FOR CS640, CS660 ONLY, BSN C363
14	84449242	1	SUPPORT, , FOR CS640, CS660 ONLY, ASN D364
15	43138	4	BOLT, {PP:80043138} Hex, M10 x 20, 8.8, Full Thd,
16	140045	8	WASHER, SPRING, Belleville, M10,
17	84435458	1	SUPPORT,
18	84433743	1	PLATFORM, , FOR CS520, CS540 ONLY, FOR CL560 ONLY
18	84435635	1	PLATFORM, , FOR CS640, CS660 ONLY
19	43128	1	BOLT, Hex, M8 x 30, 8.8,
20	140041	1	WASHER, M8 x 28 x 3,
21	84439293	1	PLATE,
22	412649	8	WASHER, SPRING, Belleville, M6,
23	120100	6	BOLT, Hex, M6 x 20, 8.8,
24	43140	2	BOLT, Hex, M10 x 30, 8.8, Full Thd,
25	100037	2	NUT, M10 x 1.5, Cl 8,
26	84439295	1	LADDER,
27	84437965	1	BRACKET,
28	15896221	2	NUT, M6, Cl 10,
29	84014502	2	CAP, INTRODUCTION,
30	9513055	2	COVER, {PP:89513055}
31	435133	1	ROD, {PP:80435133}
32	455168	1	HOSE, FLEXIBLE, {PP:80455168}
33	84430190	6	NUT, M8, FOR CL560 ONLY
34	84430060	12	WASHER, 8MM, FOR CL560 ONLY

CS660 COMBINE BASE UNIT (1/03-) - Sheet Metal/Decals

08.210(01) ENGINE GUARDS AND PLATFORM LADDER

ссылка	Номер детали	Кол-во	Описание
35	84430224	1	PLATE, COVER, , FOR CL560 ONLY
36	84430225	2	SCREW, M8x35, FOR CL560 ONLY
37	84430220	1	SUPPORT, , FOR CL560 ONLY
38	84430161	4	SCREW, M8x25, FOR CL560 ONLY
39	84430221	1	SUPPORT, , FOR CL560 ONLY
40	84430218	10	SCREW, M10x40, FOR CL560 ONLY
41	84430215	23	WASHER, 10MM, FOR CL560 ONLY
42	84430223	1	SUPPORT, , FOR CL560 ONLY
43	84430214	10	NUT, M10, FOR CL560 ONLY
44	84430222	1	SUPPORT, , FOR CL560 ONLY
45	84430090	3	SCREW, M10x25, FOR CL560 ONLY

08.211(01) SIGNAL PLATES

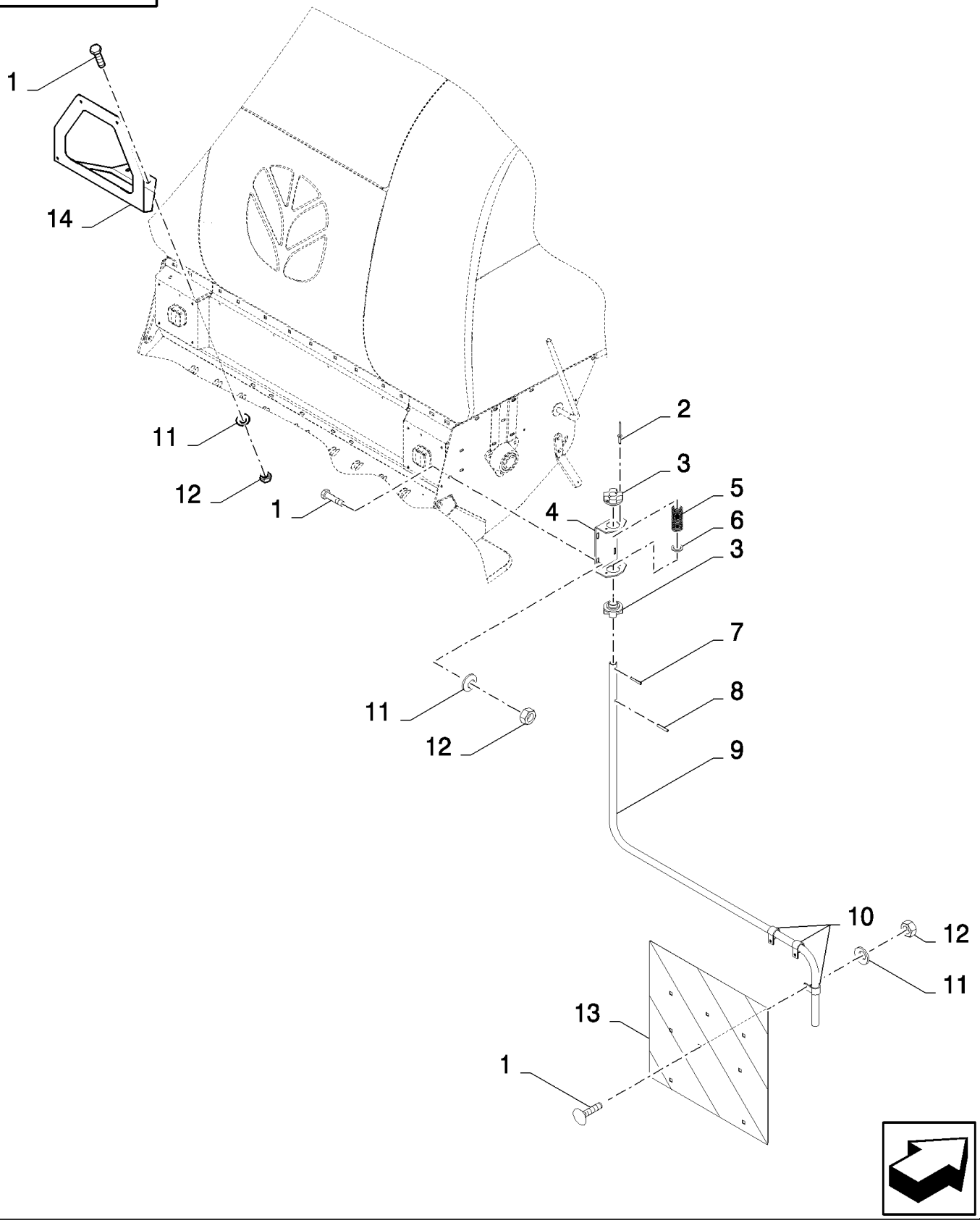

CS660 COMBINE BASE UNIT (1/03-) - Sheet Metal/Decals

08.211(01) SIGNAL PLATES

ссылка	Номер детали	Кол-во	Описание
1	120104	16	BOLT, Hex, M8 x 20, 8.8,
2	NS	8	NOT SERVICED, RIVET
3	921928	4	RING, {PP:80921928}
4	9814947	2	SUPPORT, {PP:89814947}
5	435967	2	SPRING, {PP:80435967}
6	378248	2	WASHER, {PP:80378248} 24MM
7	84022829	2	PIN,
8	9503523	2	PIN, {PP:89503523}
9	84447687	1	ARM, SUPPORTING, RH
9	84447654	1	ARM, SUPPORTING, LH
10	418407	6	CLAMP, {PP:80418407}
11	322358	16	WASHER, SPRING, Belleville, M8,
12	89706690	16	NUT, M8, Cl 8,
13	84607381	2	PLATE,
14	84447708	1	SUPPORT, , FOR ITALY ONLY

08.212(01) STRAW HOOD, CANVAS

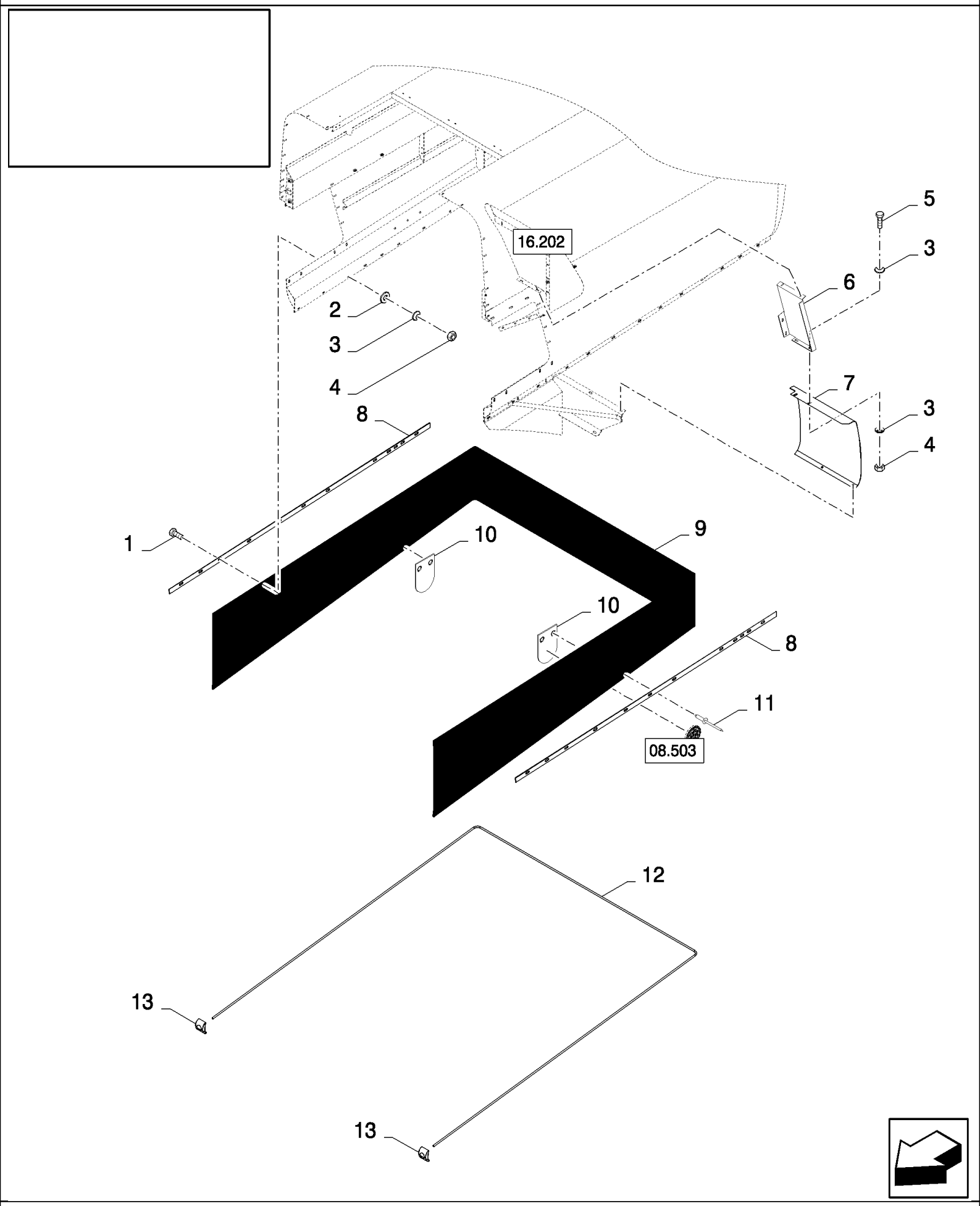

CS660 COMBINE BASE UNIT (1/03-) - Sheet Metal/Decals

08.212(01) STRAW HOOD, CANVAS

ссылка	Номер детали	Кол-во	Описание
1	308761	AR	BOLT, CARRIAGE, Short NK, M8 x 25, Cl8.8, Full Thd,
2	140041	AR	WASHER, M8 x 28 x 3,
3	412650	AR	WASHER, SPRING, Belleville, M8,
4	89706690	AR	NUT, M8, Cl 8,
5	120104	2	BOLT, Hex, M8 x 20, 8.8,
6	84446646	1	PLATE, , BSN C407
6	84457885	1	PLATE, , ASN D408
7	84442811	1	PLATE,
8	84434614	2	PLATE, FIXING,
9	84434594	1	CANVAS, , FOR CS520, CS540 ONLY, FOR CL560 ONLY
9	84434754	1	CANVAS, , FOR CS640, CS660 ONLY
10	84446659	2	PLATE,
11	NS	4	NOT SERVICED, RIVET
12	84434595	1	ROD, , FOR CS520, CS540 ONLY, FOR CL560 ONLY
12	84434755	1	ROD, , FOR CS640, CS660 ONLY
13	432067	2	CIRCLIP, {PP:80432067}

08.213(01) LOWER SHIELDS WITH TRACKS

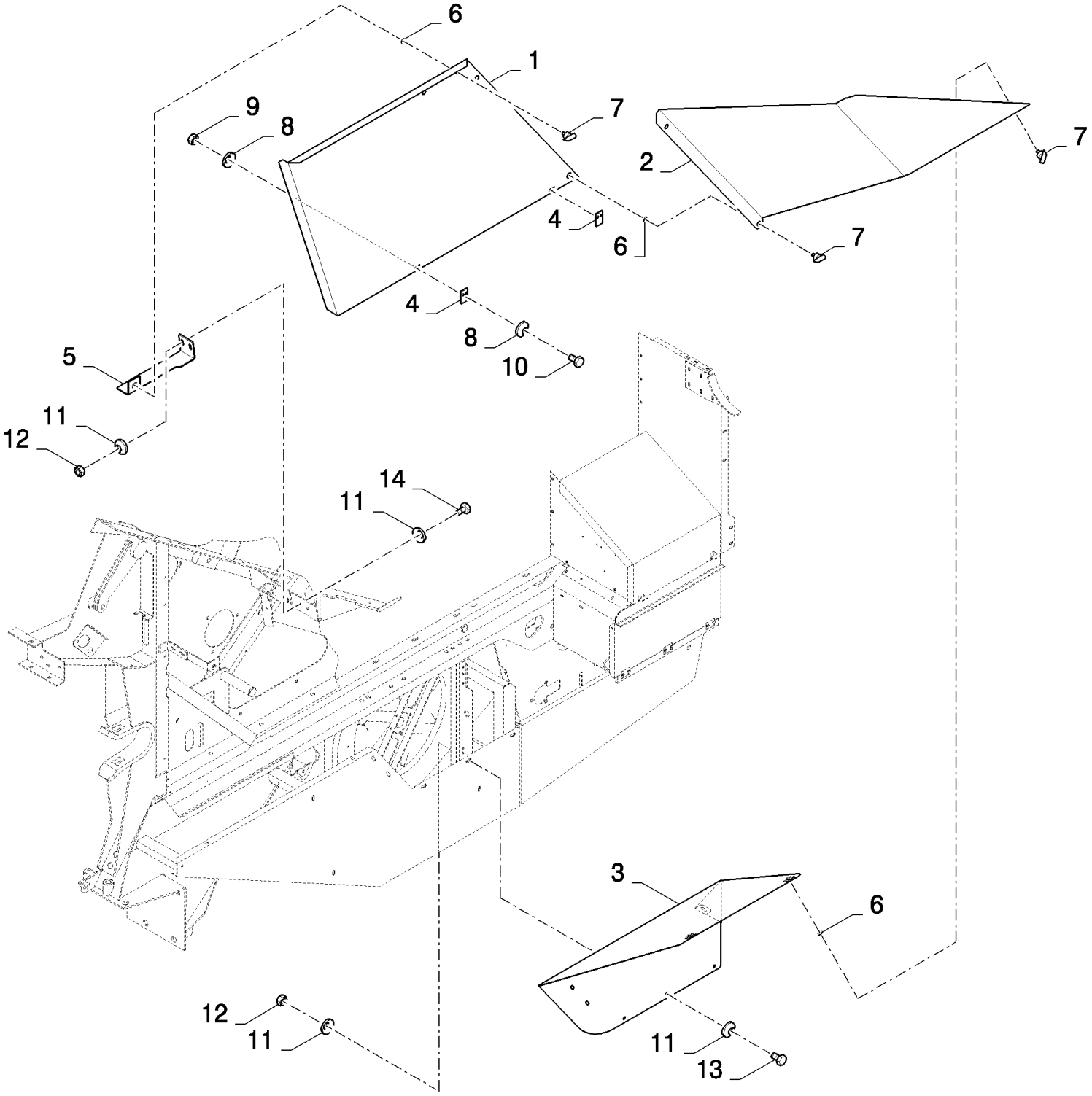

CS660 COMBINE BASE UNIT (1/03-) - Sheet Metal/Decals

08.213(01) LOWER SHIELDS WITH TRACKS

ссылка	Номер детали	Кол-во	Описание
1	84454071	1	PLATE,
2	84454072	1	PLATE,
3	84454074	1	PLATE,
4	84334503	1	PLATE, PLASTIC,
5	84454083	1	PLATE,
6	9514605	6	RING, LOCKING, {PP:89514605}
7	9831581	6	LOCK, {PP:89831581}
8	322357	8	WASHER, SPRING, Belleville, M6,
9	15896221	4	NUT, M6, Cl 10,
10	120100	4	BOLT, Hex, M6 x 20, 8.8,
11	322358	16	WASHER, SPRING, Belleville, M8,
12	89706690	8	NUT, M8, Cl 8,
13	16043224	6	BOLT, Hex, M8 x 16, 8.8, Full Thd,
14	120104	2	BOLT, Hex, M8 x 20, 8.8,

08.501(01) SAFETY AND INSTRUCTION DECALS

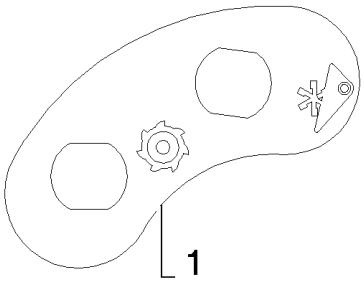

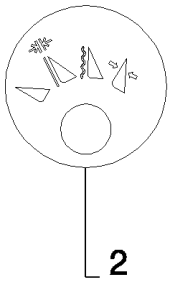

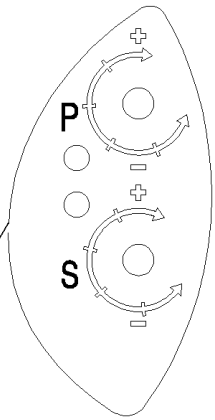

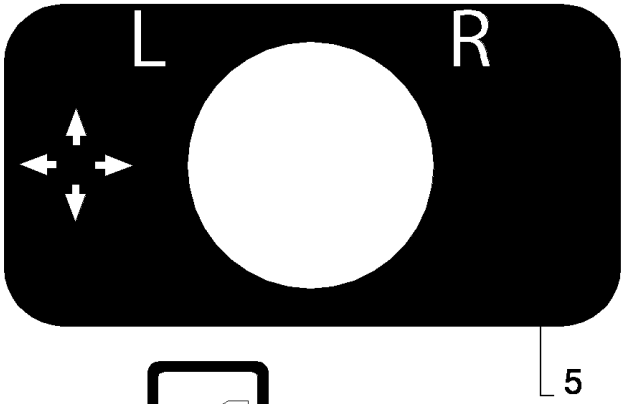

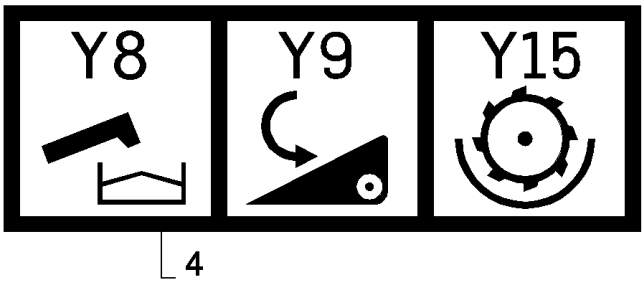

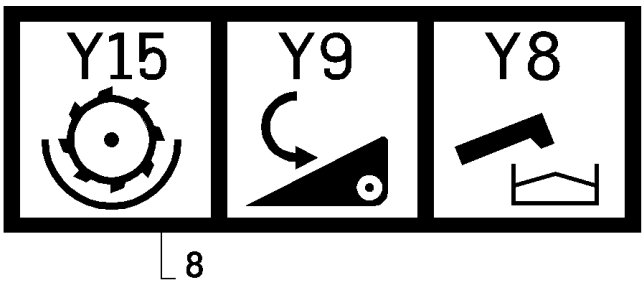

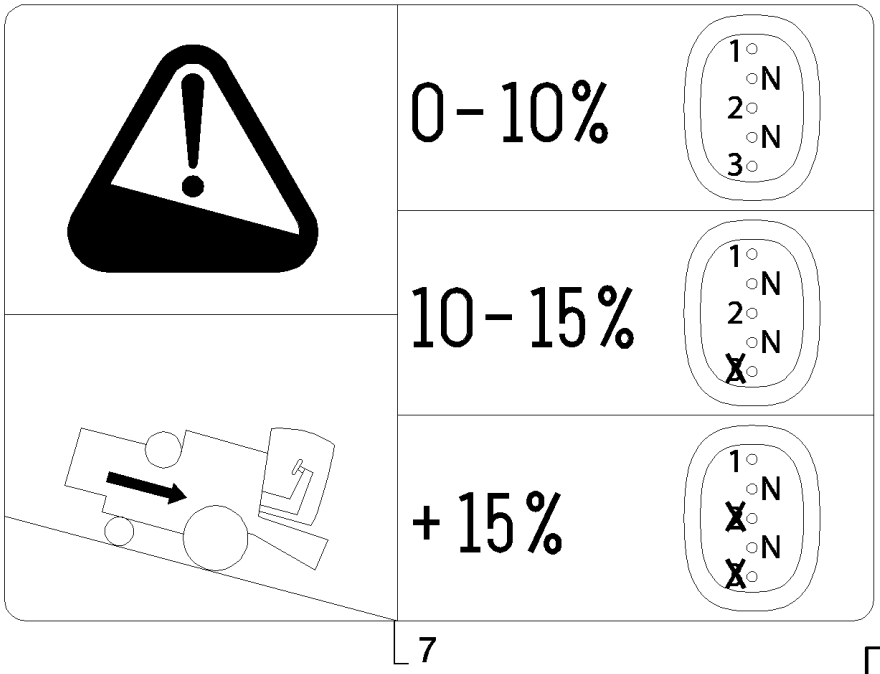

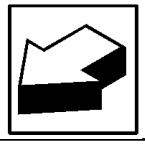

CS660 COMBINE BASE UNIT (1/03-) - Sheet Metal/Decals

08.501(01) SAFETY AND INSTRUCTION DECALS

ссылка	Номер детали	Кол-во	Описание
1	84433266	1	DECAL,
2	84433274	1	DECAL,
3	84433276	1	DECAL,
4	84441614	1	DECAL,
5	84807993	1	DECAL,
6	84434593	1	DECAL,
7	84441879	1	DECAL,
8	84453565	1	DECAL,

08.502(01) COMMERCIAL DECALS - C407

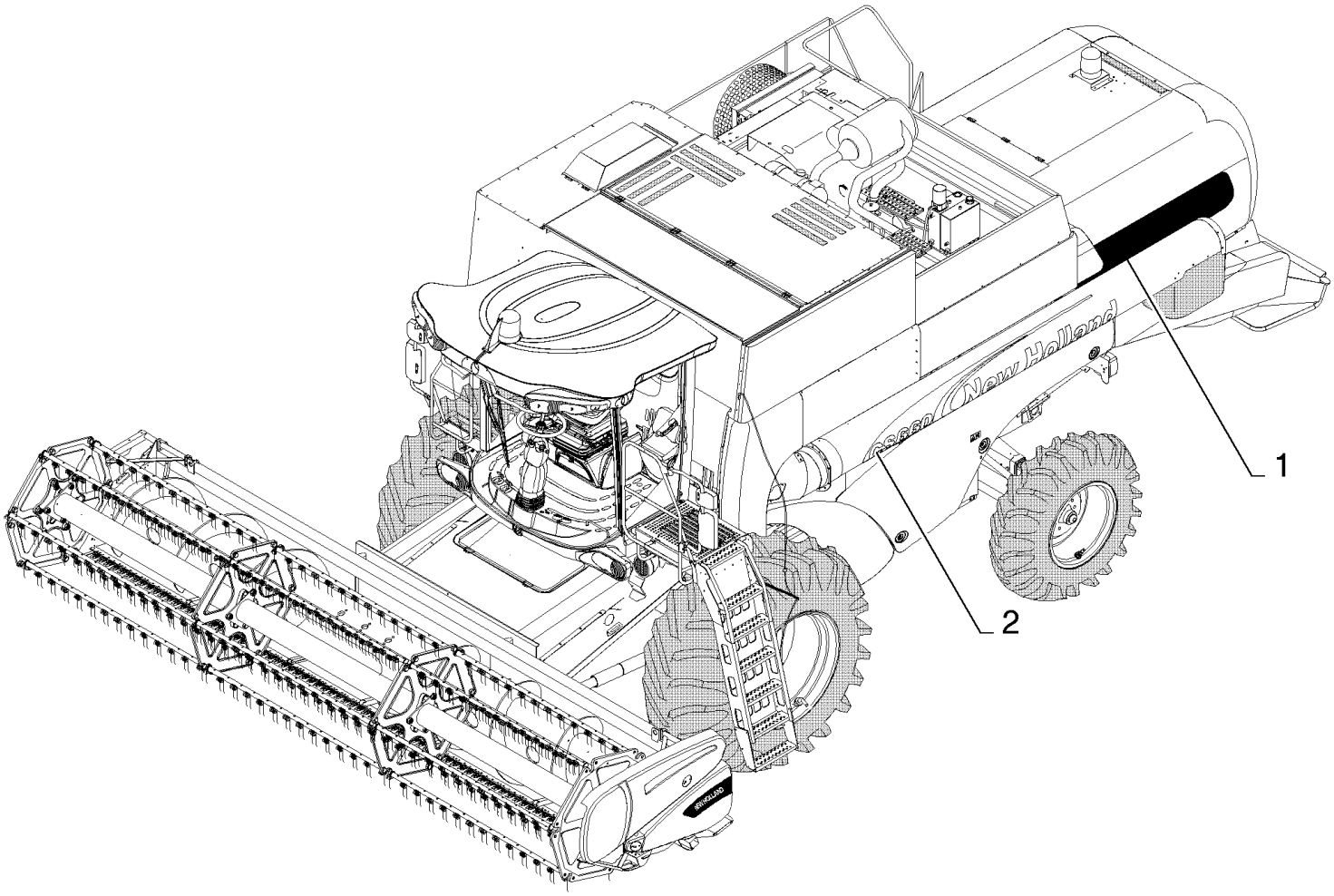

CS660 COMBINE BASE UNIT (1/03-) - Sheet Metal/Decals

08.502(01) COMMERCIAL DECALS - C407

ссылка	Номер детали	Кол-во	Описание
1	84439399	1	DECAL, RH
1	84439383	1	DECAL, LH
2	84444683	1	DECAL, RH, FOR CS520 ONLY
2	84444682	1	DECAL, LH, FOR CS520 ONLY
2	84443644	1	DECAL, RH, FOR CS540 ONLY
2	84443643	1	DECAL, LH, FOR CS540 ONLY
2	84443642	1	DECAL, RH, FOR CS640 ONLY
2	84443641	1	DECAL, LH, FOR CS640 ONLY
2	84444681	1	DECAL, RH, FOR CS660 ONLY
2	84444680	1	DECAL, LH, FOR CS660 ONLY

08.503(01) SAFETY AND INSTRUCTION DECALS

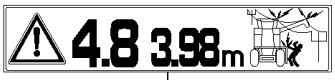

1

"Achtung ! Fahrzeug schert aus"

2

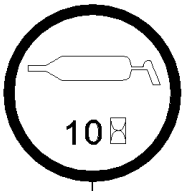

3

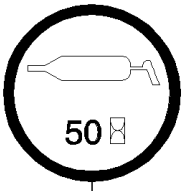

4

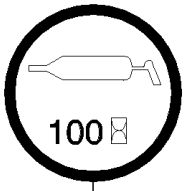

5

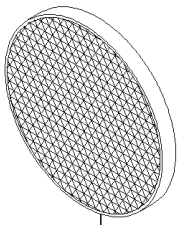

6

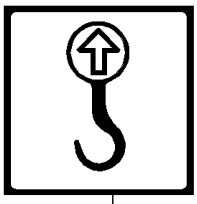

7

8

9

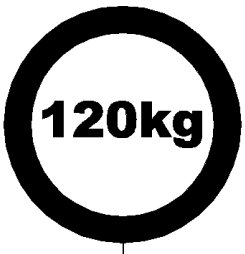

10

11

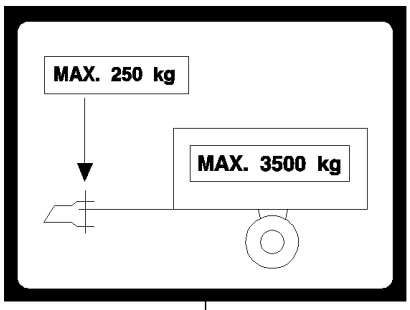

12

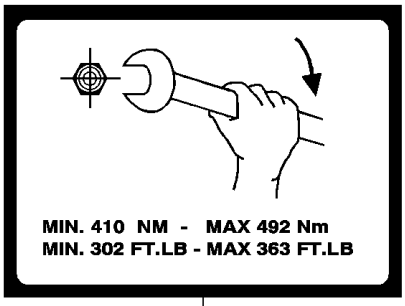

13

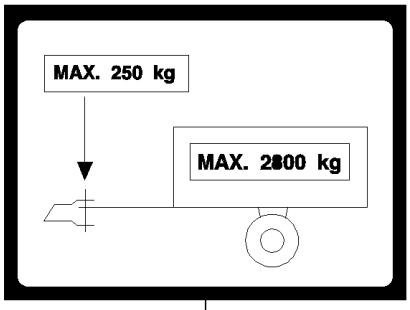

15

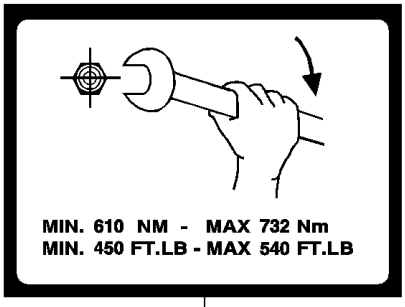

14

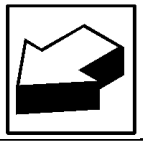

CS660 COMBINE BASE UNIT (1/03-) - Sheet Metal/Decals

08.503(01) SAFETY AND INSTRUCTION DECALS

ссылка	Номер детали	Кол-во	Описание
1	84432862	1	DECAL,
2	425961	AR	DECAL, {PP:80425961}
3	84989464	AR	DECAL,
4	84334829	AR	DECAL,
5	84334828	AR	DECAL,
6	437024	2	REFLECTOR, {PP:80437024} RED
6	435895	6	REFLECTOR, {PP:80435895} YELLOW
6	84447967	2	REFLECTOR, , FOR CL560 ONLY
7	449973	AR	DECAL, {PP:80449973}
8	89513272	1	DECAL,
9	84072701	1	DECAL,
10	84449793	1	DECAL,
11	84432904	1	DECAL,
12	84433130	AR	DECAL,
13	84989141	AR	DECAL,
13	84429339	AR	DECAL, , FOR RUSSIA ONLY
14	84989135	AR	DECAL,
14	84058950	AR	DECAL, , FOR RUSSIA ONLY
15	84462829	AR	DECAL,

08.504(01) SAFETY AND INSTRUCTION DECALS

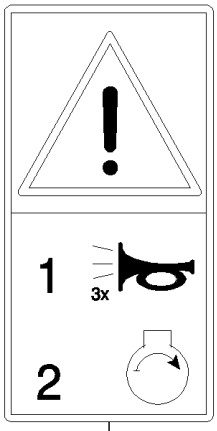

1

2

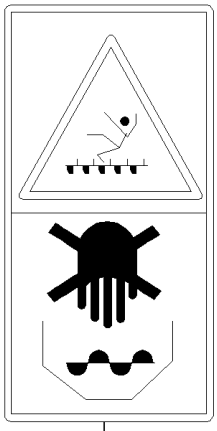

3

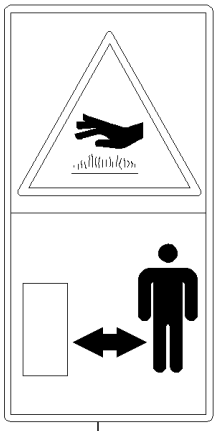

4

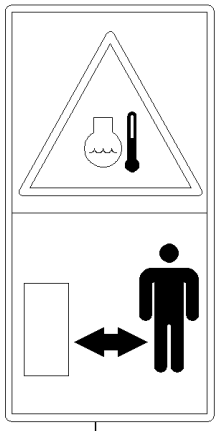

5

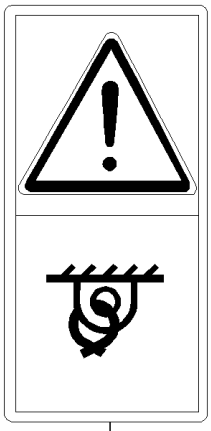

6

7

8

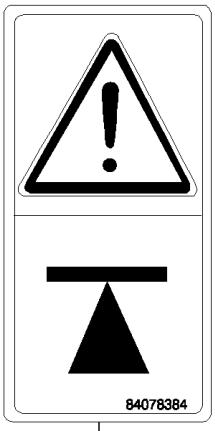

9

10

Background transparent

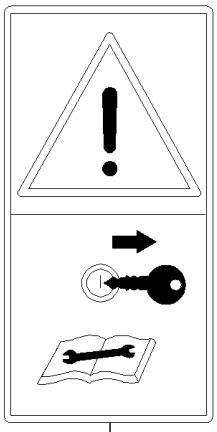

11

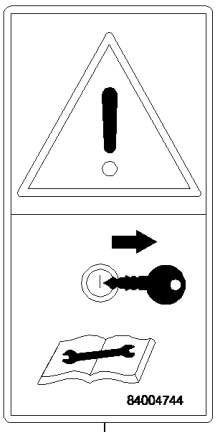

12

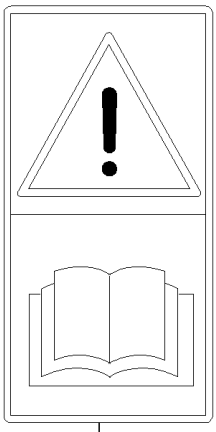

13

14

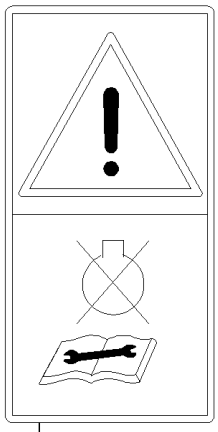

15

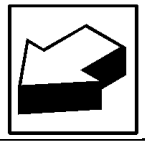

CS660 COMBINE BASE UNIT (1/03-) - Sheet Metal/Decals

08.504(01) SAFETY AND INSTRUCTION DECALS

ссылка	Номер детали	Кол-во	Описание
1	84012892	1	DECAL,
2	84004736	1	DECAL,
3	84004740	2	DECAL,
4	84004742	1	DECAL,
5	84432981	1	DECAL,
6	84100296	2	DECAL,
7	84004734	AR	DECAL,
8	84004743	1	DECAL,
9	84078384	1	DECAL,
10	84004735	AR	DECAL,
11	84012893	1	DECAL,
12	84004744	2	DECAL,
13	84004731	AR	DECAL,
14	84004732	1	DECAL,
15	84004733	AR	DECAL,

08.505(01) SAFETY AND INSTRUCTION DECALS

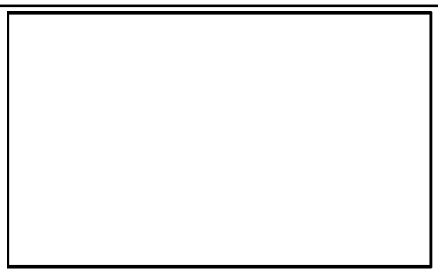

1

2

7

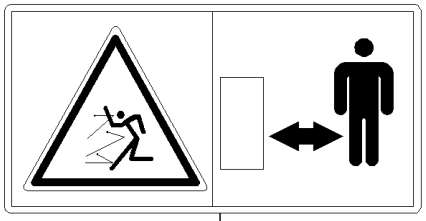

13

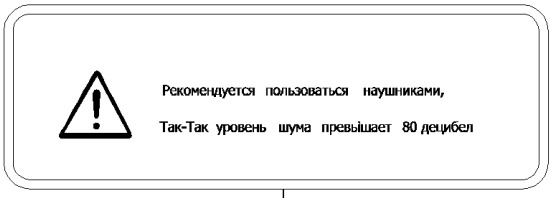

14

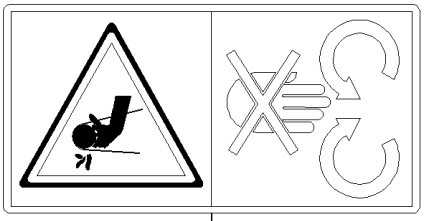

3

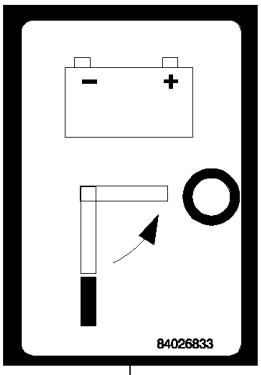

4

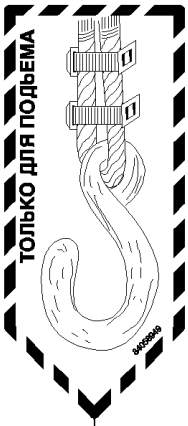

5

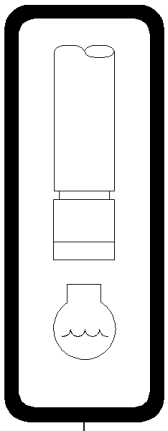

6

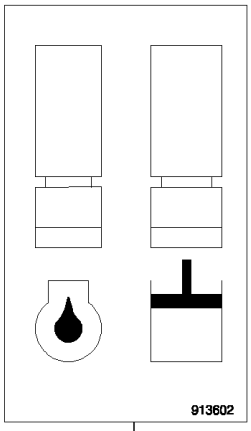

15

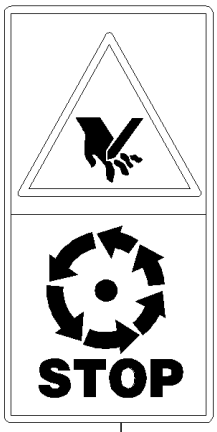

8

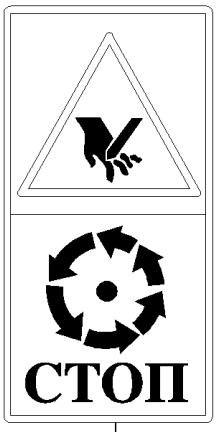

9

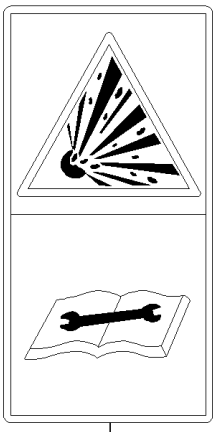

10

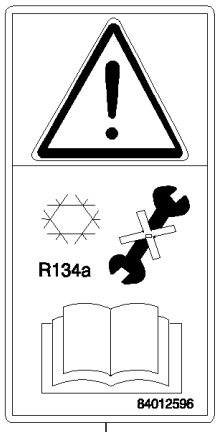

11

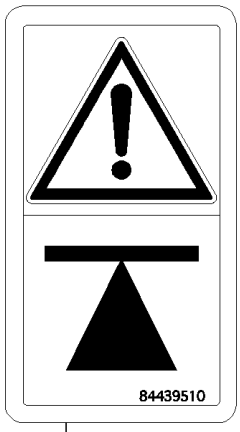

12

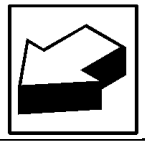

CS660 COMBINE BASE UNIT (1/03-) - Sheet Metal/Decals

08.505(01) SAFETY AND INSTRUCTION DECALS

ссылка	Номер детали	Кол-во	Описание
1	87802951	1	EMBLEM, , BSN C371
1	87802965	1	EMBLEM, , ASN D372
2	82031728	6	DECAL, Branding
3	84011345	2	DECAL,
4	84026833	1	DECAL,
5	84058949	5	DECAL, , FOR RUSSIA ONLY
6	84433021	1	DECAL,
7	84072135	1	DECAL, , FOR RUSSIA ONLY
8	84014117	7	DECAL,
9	84062737	7	DECAL, , FOR RUSSIA ONLY
10	84005363	1	DECAL,
11	84012596	1	DECAL,
12	84439510	AR	DECAL,
13	84004739	1	DECAL,
14	84429052	1	DECAL, , FOR RUSSIA ONLY
15	913602	1	DECAL, {PP:80913602}

08.506(01) DECALS : PRINTED CIRCUIT

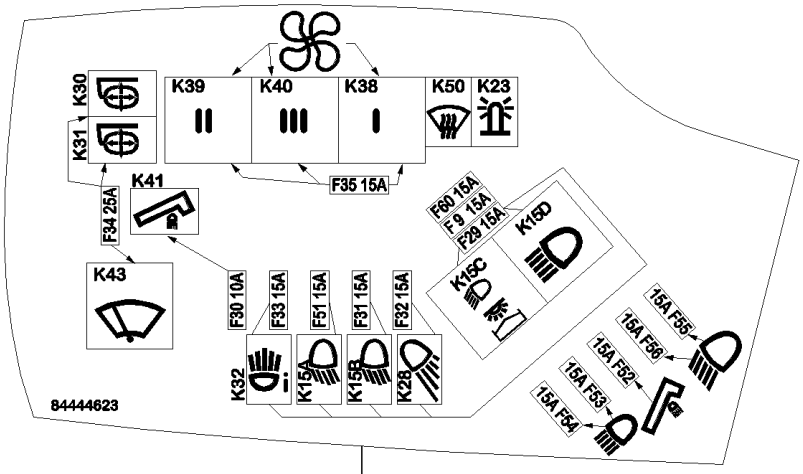

1

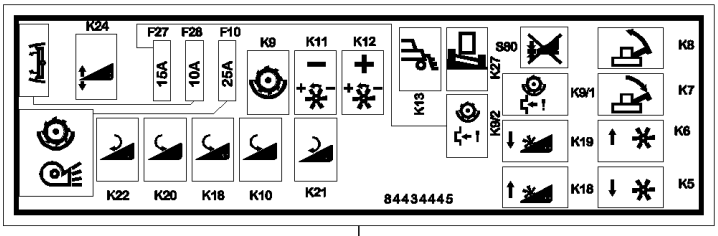

2

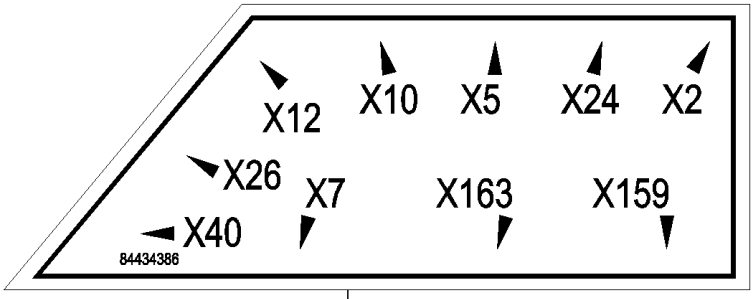

4

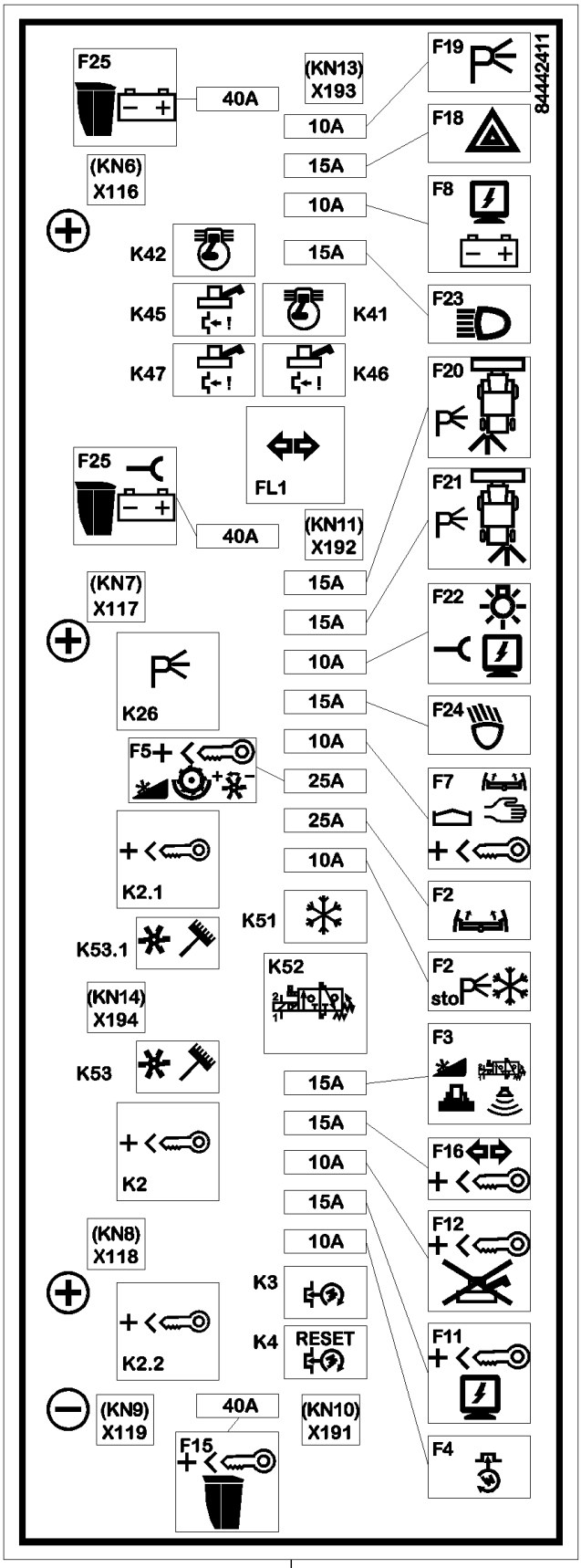

3

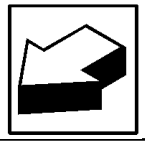

CS660 COMBINE BASE UNIT (1/03-) - Sheet Metal/Decals

08.506(01) DECALS : PRINTED CIRCUIT

ссылка	Номер детали	Кол-во	Описание
1	84444623	1	DECAL, , BSN C415
1	84459791	1	DECAL, , BSN F416479
1	87352860	1	DECAL, , ASN D480
2	84434445	1	DECAL,
3	84442411	1	DECAL,
4	84434386	1	DECAL,

08.507(01) COMMERCIAL DECALS - D408

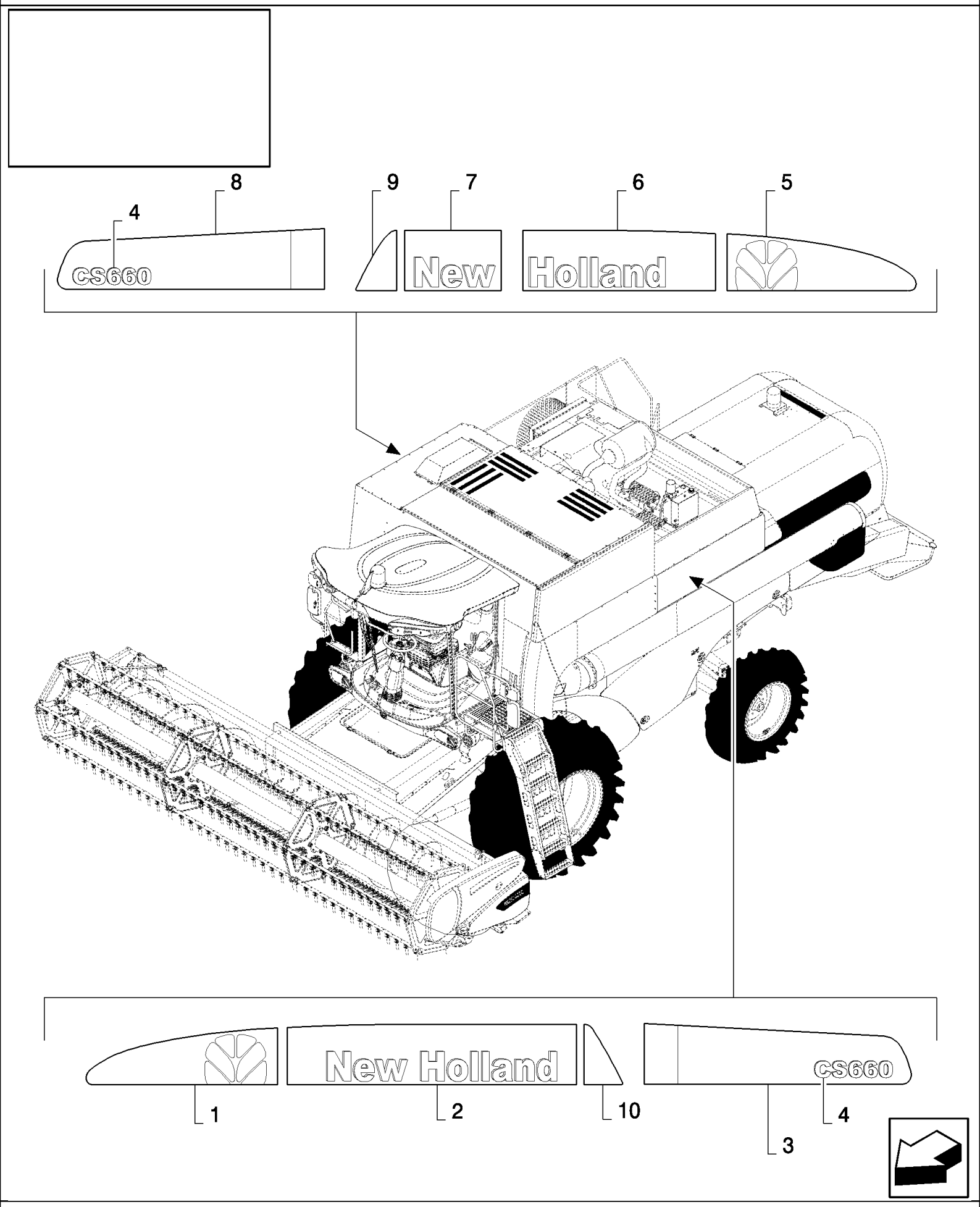

CS660 COMBINE BASE UNIT (1/03-) - Sheet Metal/Decals

08.507(01) COMMERCIAL DECALS - D408

ссылка	Номер детали	Кол-во	Описание
1	84460546	1	DECAL,
2	84460452	1	DECAL,
3	84460495	1	DECAL,
4	84458056	2	DECAL, , FOR CS520 ONLY
4	84458060	2	DECAL, , FOR CS540 ONLY
4	84458061	2	DECAL, , FOR CS640 ONLY
4	84459415	2	DECAL, , FOR CS660 ONLY
4	84458057	2	DECAL, , FOR CL560 ONLY
5	84460548	1	DECAL,
6	84460547	1	DECAL,
7	84460453	1	DECAL,
8	84460496	1	DECAL,
9	87316699	1	DECAL, , ASN D440
10	84462139	1	DECAL, , ASN D440

CAB	**CABINE**	**CABINA**	**CAB**
CABINA	**KABINE**	**CABINA**	**CABINE**

SEC. 10

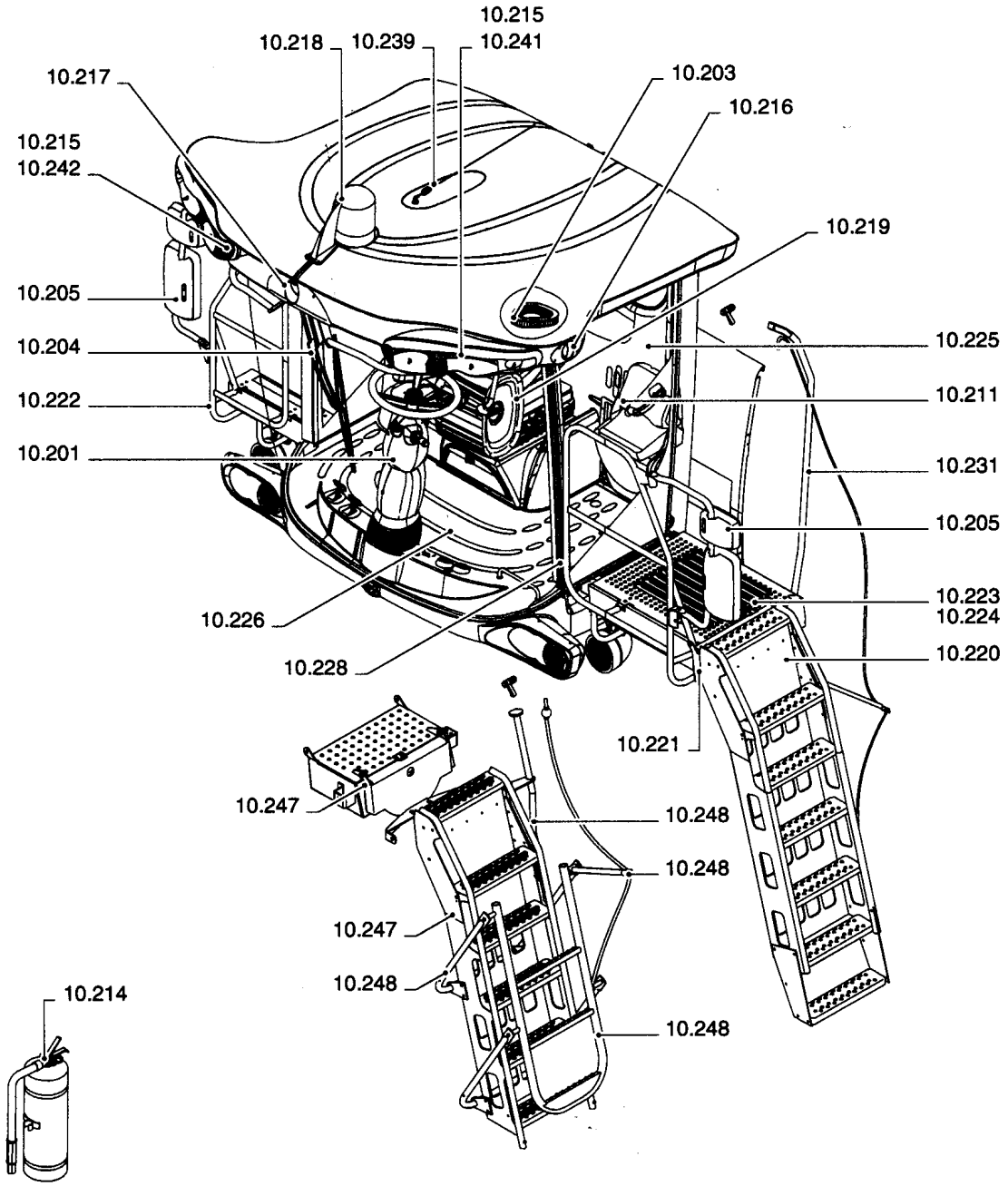

ссылка	Номер детали	Кол-во	Описание

CAB	**CABINE**	**CABINA**	**CAB**
CABINA	**KABINE**	**CABINA**	**CABINE**

SEC. 10

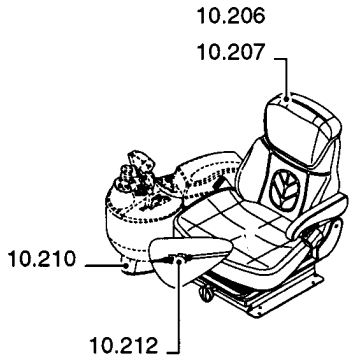

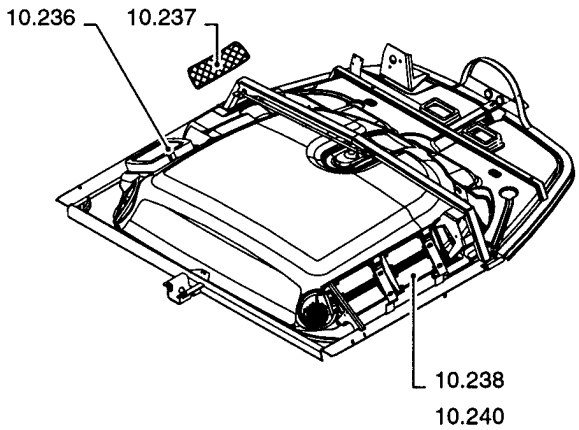

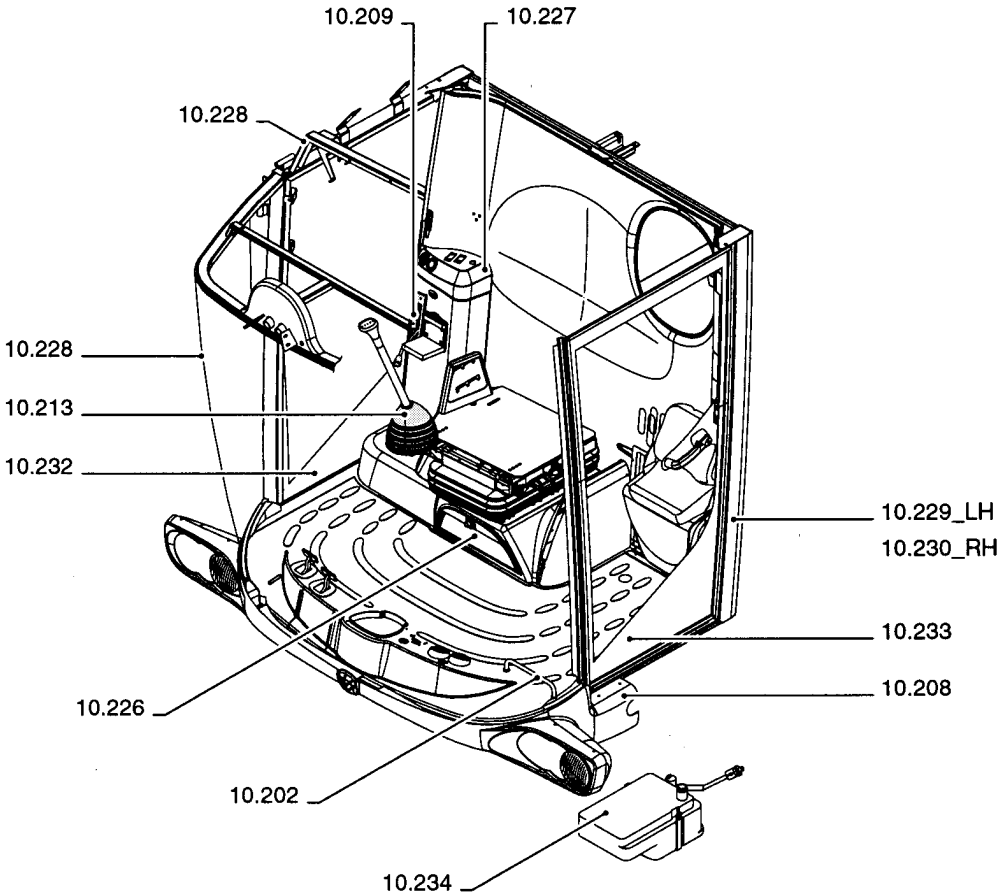

ссылка	Номер детали	Кол-во	Описание

CAB	**CABINE**	**CABINA**	**CAB**
CABINA	**KABINE**	**CABINA**	**CABINE**

SEC. 10

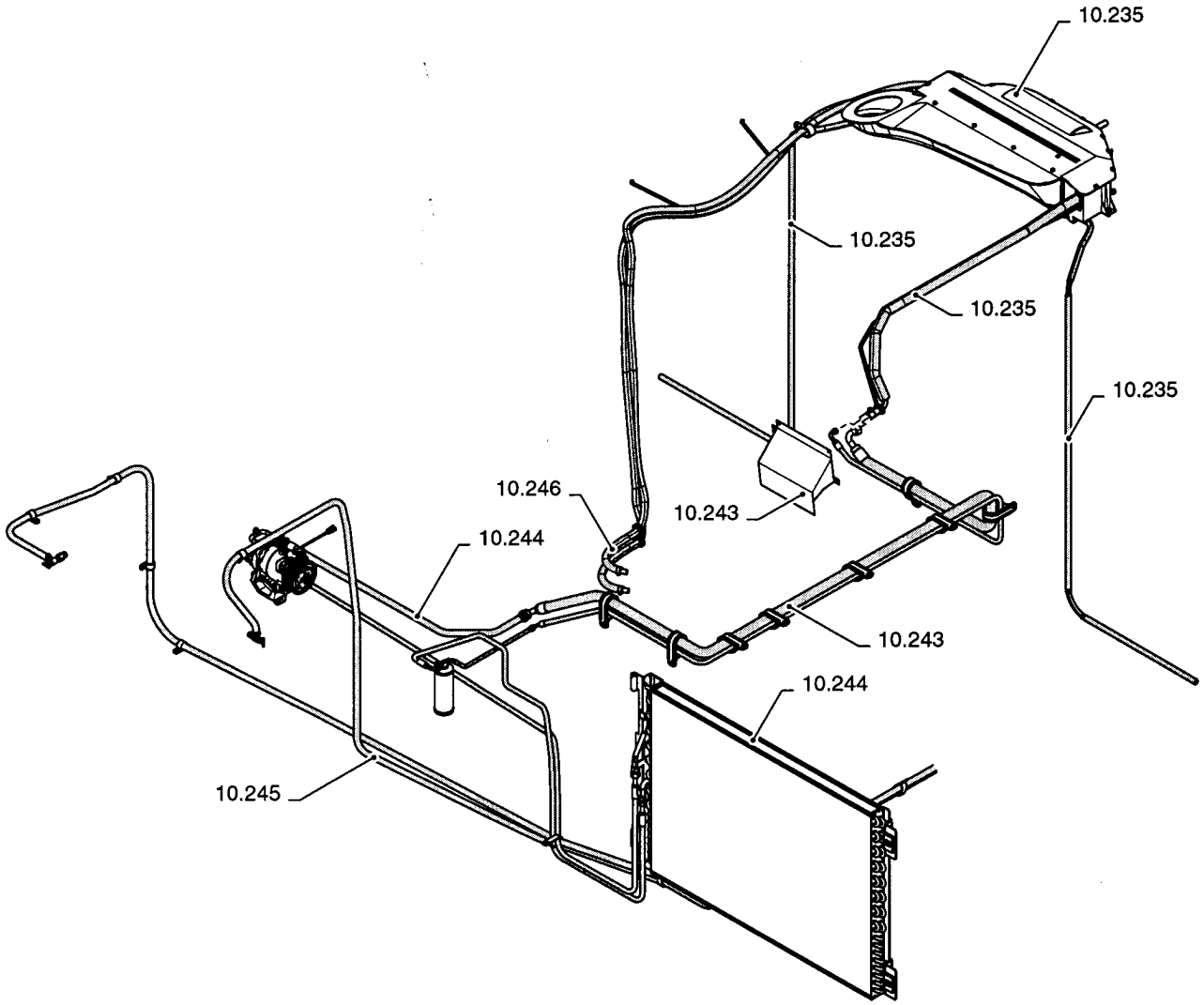

ссылка	Номер детали	Кол-во	Описание

10.201(01) STEERING COLUMN

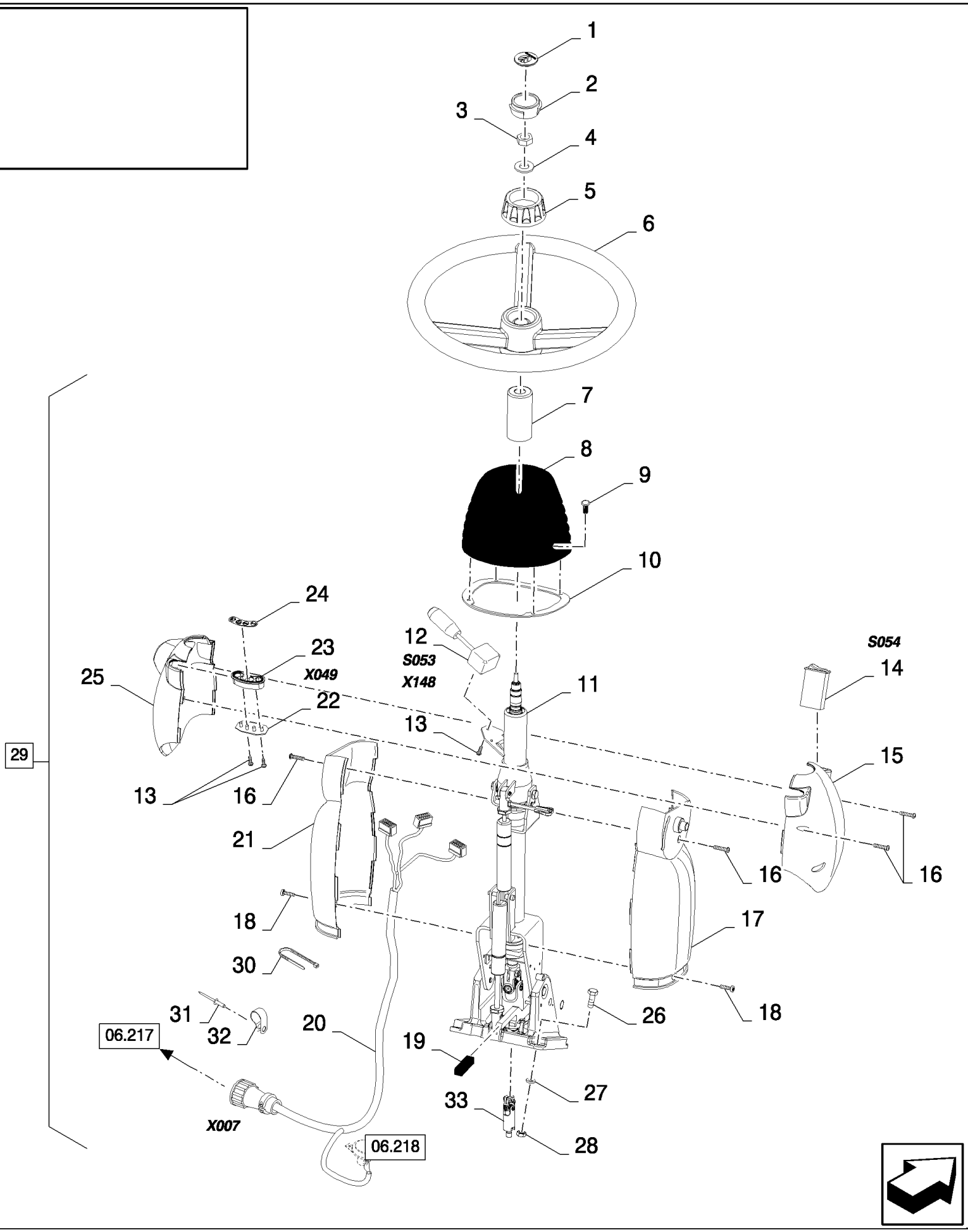

CS660 COMBINE BASE UNIT (1/03-) - Cab

10.201(01) STEERING COLUMN

ссылка	Номер детали	Кол-во	Описание
1	86504532	1	EMBLEM,
2	86504533	1	COVER,
3	86511416	1	NUT, Jam, 5/8"-18, G2,
4	140048	1	WASHER, SPRING, {PP:80140048} Belleville, M16,
5	84320688	1	KNOB,
6	84320687	1	STEERING WHEEL,
7	84607196	1	BUSHING,
8	84320421	1	BELLOWS,
9	84607894	4	PLUG, , BSN C487
9	87343499	7	PIN, CLEVIS, , ASN D488
10	84431852	1	PLATE, FIXING, , BSN C487
11	84814447	1	STEERING COLUMN, , NO SUBPARTS YET AVAILABLE, BSN C407
11	84800929	1	STEERING COLUMN, , NO SUBPARTS YET AVAILABLE, ASN D408
12	84014920	1	SWITCH, ASSY, , DIRECTION SWITCH
13	280154	5	SCREW, SELF TAPPING, Cross Rd Hd, #6 x 1/2",
14	84817392	1	SWITCH, HAZARD LIGHTS, HAZARD SWITCH
15	84320431	1	COVER,
16	9514970	4	SCREW,
17	84320420	1	COVER,
18	412475	2	SCREW, M4x16
19	84807930	1	NO DESCRIPTION,
20	84437176	1	HARNESS, WIRE, , SEE FIGURE 06.517
21	84320419	1	COVER,
22	84400068	1	BOARD, PRINTED CIRCUIT,
23	84400987	1	BEZEL,
24	84432573	1	DECAL,
25	84320430	1	COVER,
26	43128	4	BOLT, Hex, M8 x 30, 8.8,
27	322358	4	WASHER, SPRING, Belleville, M8,
28	89706690	4	NUT, M8, Cl 8,
29	84100360	1	STEERING COLUMN, (7,8,10 to 25)
30	89993154	2	CLAMP,
31	9512290	2	RIVET,
32	84818444	2	CLAMP,
33	84800898	1	SHAFT,

10.202(01) FEET SUPPORT

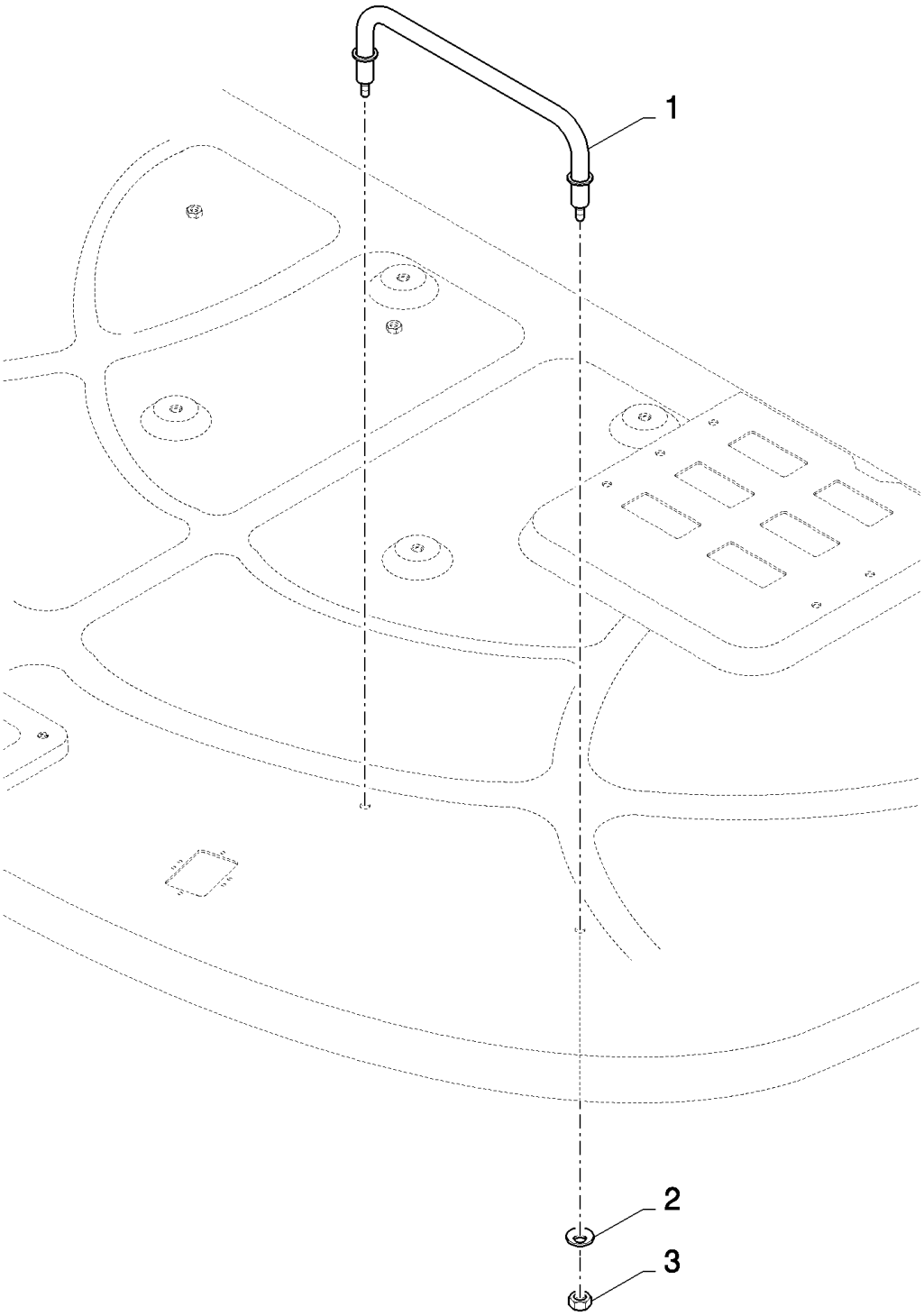

CS660 COMBINE BASE UNIT (1/03-) - Cab

10.202(01) FEET SUPPORT

ссылка	Номер детали	Кол-во	Описание
1	84014562	1	SUPPORT,
2	322358	2	WASHER, SPRING, Belleville, M8,
3	89706690	2	NUT, M8, Cl 8,

10.203(01) CAB ROOF, AIR FILTER

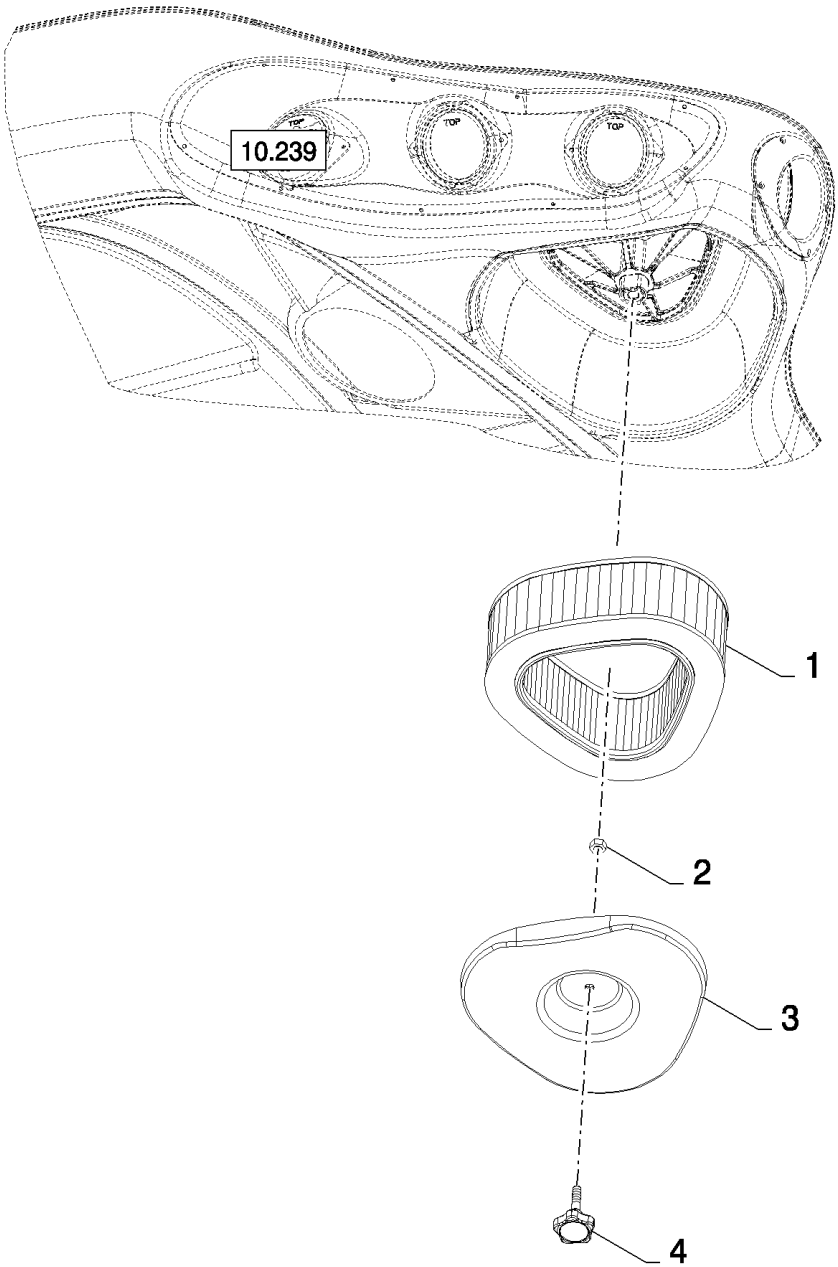

CS660 COMBINE BASE UNIT (1/03-) - Cab

10.203(01) CAB ROOF, AIR FILTER

ссылка	Номер детали	Кол-во	Описание
1	84807659	1	FILTER, CAB,
2	100037	1	NUT, M10 x 1.5, Cl 8, , BSN C479
2	80756970	1	NUT, , ASN D480
3	84814123	1	COVER,
4	84814124	1	KNOB,

10.204(01) WINDSCREEN WIPER

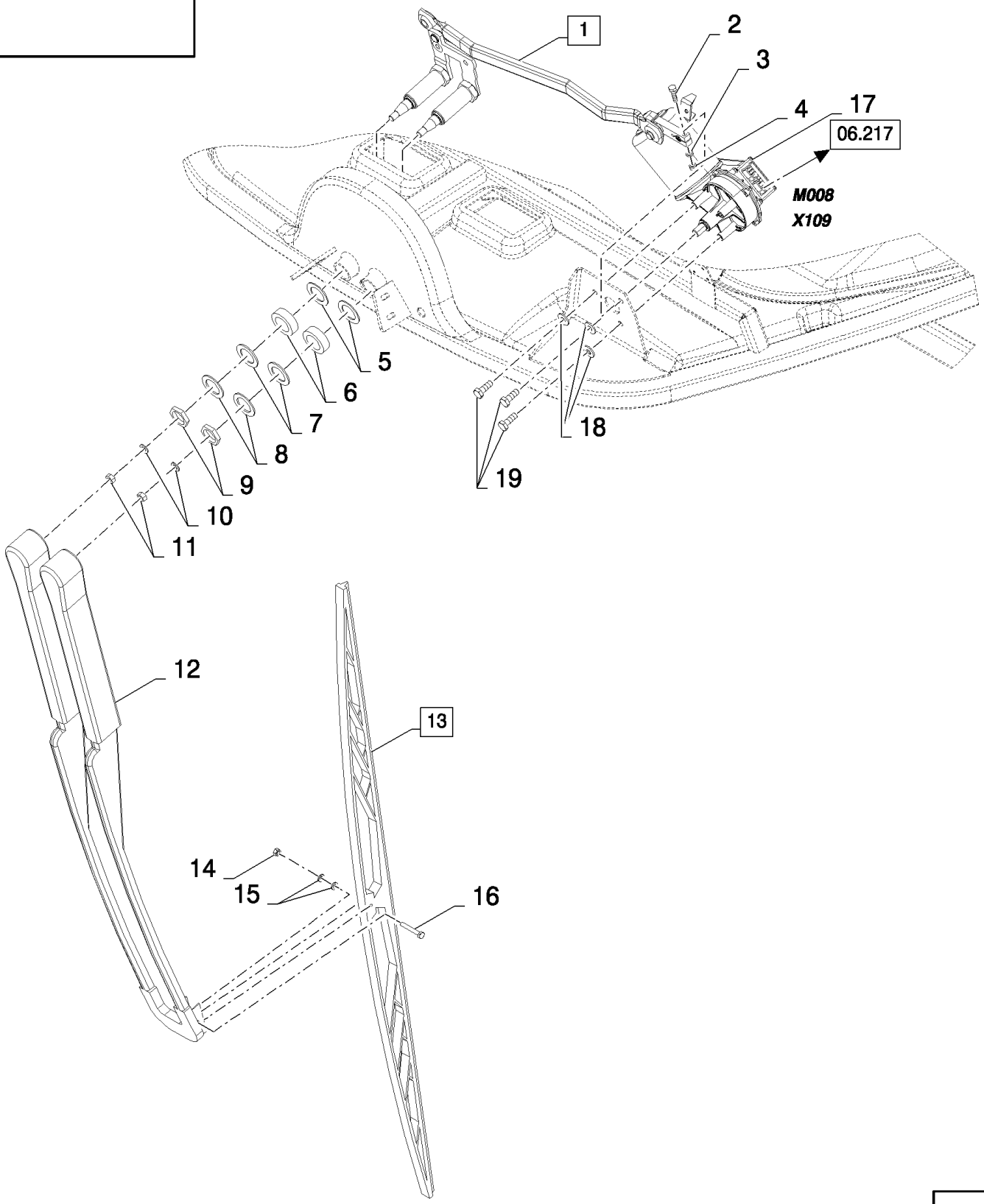

CS660 COMBINE BASE UNIT (1/03-) - Cab

10.204(01) WINDSCREEN WIPER

ссылка	Номер детали	Кол-во	Описание
1	84100260	1	WIPER ARM, (2 to 9)
2	NSS	1	NOT SERVICED SEPARATELY,
3	NSS	1	NOT SERVICED SEPARATELY,
4	NSS	1	NOT SERVICED SEPARATELY,
5	NSS	2	NOT SERVICED SEPARATELY,
6	NSS	2	NOT SERVICED SEPARATELY,
7	NSS	2	NOT SERVICED SEPARATELY,
8	NSS	2	NOT SERVICED SEPARATELY,
9	NSS	2	NOT SERVICED SEPARATELY,
10	86511315	2	WASHER, M8 x 16 x 1.6,
11	89706690	2	NUT, M8, Cl 8,
12	84100259	1	WIPER ARM, , BSN C479
12	86542153	1	WIPER ARM, , ASN D480
13	84007417	1	WIPER BLADE, (14 to 16)
14	NSS	1	NOT SERVICED SEPARATELY,
15	NSS	2	NOT SERVICED SEPARATELY,
16	NSS	1	NOT SERVICED SEPARATELY,
17	84007419	1	WIPER MOTOR, , BSN C415
17	84431950	1	WIPER MOTOR, , ASN D416
18	322357	3	WASHER, SPRING, Belleville, M6,
19	86508568	3	BOLT, Hex, M6 x 16, 8.8,

10.205(01) REAR VIEW MIRROR

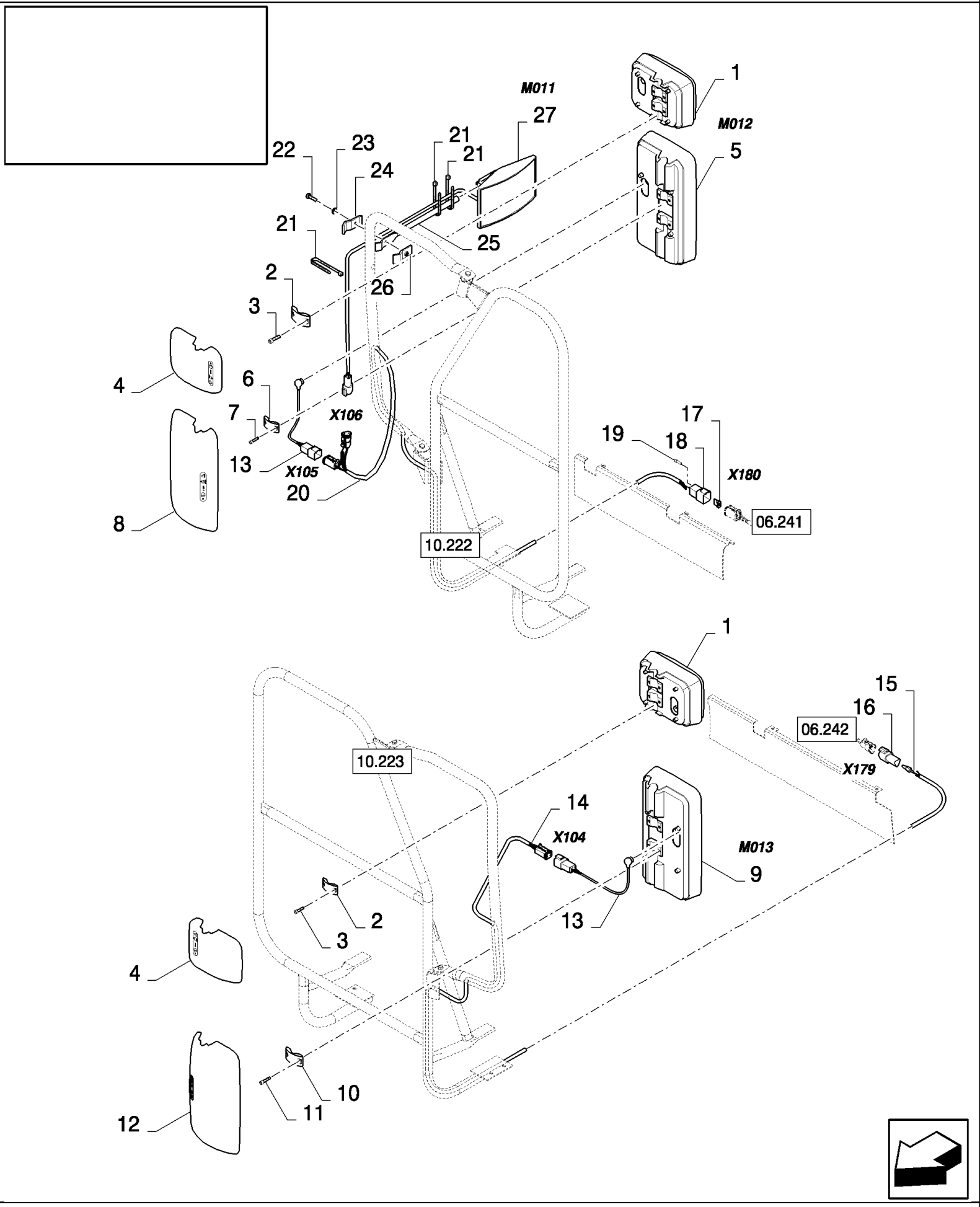

10.205(01) REAR VIEW MIRROR

ссылка	Номер детали	Кол-во	Описание
1	84814470	2	DIA KIT, HARVESTER, (2 to 4)
2	NSS	2	NOT SERVICED SEPARATELY,
3	NSS	4	NOT SERVICED SEPARATELY,
4	NSS	1	NOT SERVICED SEPARATELY,
5	84814466	1	MIRROR, RH (6 to 8), FOR MANUAL CONTROL ONLY
5	84059852	1	MIRROR, RH, RH (6 to 8), FOR REMOTE CONTROL ONLY
6	NSS	2	NOT SERVICED SEPARATELY,
7	NSS	4	NOT SERVICED SEPARATELY,
8	NSS	1	NOT SERVICED SEPARATELY,
9	84814465	1	MIRROR, LH (10 to 12), FOR MANUAL CONTROL ONLY
9	84059851	1	MIRROR, LH, LH (10 to 12), FOR REMOTE CONTROL ONLY
10	NSS	2	NOT SERVICED SEPARATELY,
11	NSS	4	NOT SERVICED SEPARATELY,
12	NSS	1	NOT SERVICED SEPARATELY,
13	84441145	2	HARNESS, WIRE, , FOR REMOTE CONTROL ONLY, SEE FIGURE 06.538/06.539
14	84441135	1	HARNESS, WIRE, , FOR REMOTE CONTROL ONLY, SEE FIGURE 06.537
15	9611173	1	PLUG, {PP:89611173} , FOR REMOTE CONTROL ONLY, BSN C375
15	9861376	1	CONNECTOR, WIRE, {PP:89861376} , FOR REMOTE CONTROL ONLY, ASN D376
16	84074632	1	CONNECTOR, WIRE, , FOR REMOTE CONTROL ONLY, BSN C375
16	84074636	1	CONNECTOR, WIRE, , FOR REMOTE CONTROL ONLY, ASN D376
17	84806919	1	PLUG, , FOR REMOTE CONTROL ONLY, BSN C375
17	89861378	1	PLUG, , FOR REMOTE CONTROL ONLY, ASN D376
18	84806918	1	CONNECTOR, WIRE, , FOR REMOTE CONTROL ONLY, BSN C375
18	84074642	1	CONNECTOR, WIRE, , FOR REMOTE CONTROL ONLY, ASN D376
19	84068583	1	PLUG, , FOR REMOTE CONTROL ONLY
20	84441116	1	HARNESS, WIRE, , FOR REMOTE CONTROL ONLY, SEE FIGURE 06.536
21	89993154	3	CLAMP, , FOR GERMANY ONLY
22	86977786	1	BOLT, Hex, M6 x 25, 8.8, , FOR GERMANY ONLY
23	322357	1	WASHER, SPRING, Belleville, M6, , FOR GERMANY ONLY
24	84007508	1	CLAMP, , FOR GERMANY ONLY
25	84007509	1	SUPPORT, , FOR GERMANY ONLY
26	84007510	1	CLAMP, , FOR GERMANY ONLY
27	84441150	1	MIRROR, , FOR GERMANY ONLY, SEE FIGURE 06.701

10.206(01) STANDARD SEAT

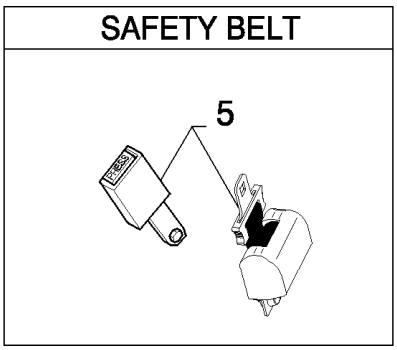

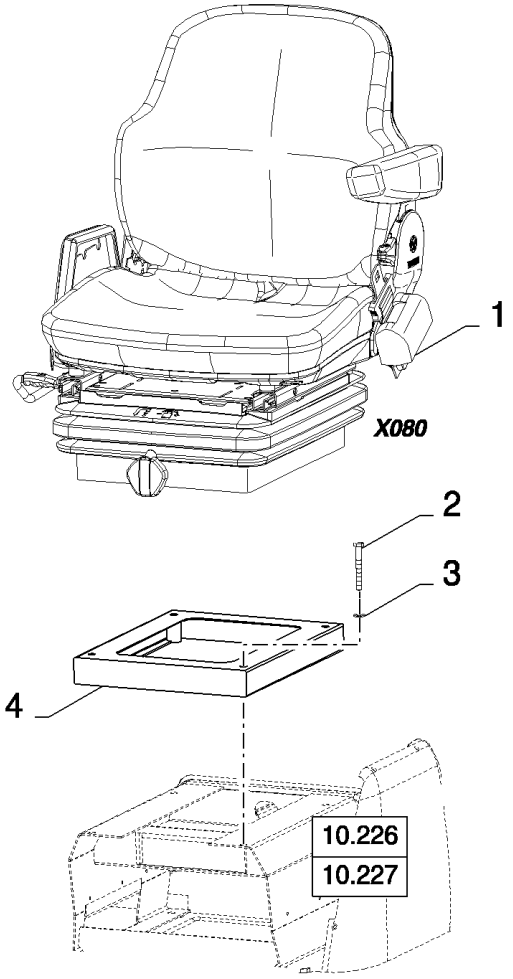

CS660 COMBINE BASE UNIT (1/03-) - Cab

10.206(01) STANDARD SEAT

ссылка	Номер детали	Кол-во	Описание
1	84078817	1	SEAT, DRIVER, , BSN C415
1	84800913	1	SEAT, DRIVER, , ASN D416
2	412108	4	BOLT, {PP:80412108} Hex, M8 x 70, 8.8, Full Thd, M8x70
3	322358	4	WASHER, SPRING, Belleville, M8,
4	9594528	1	SUPPORT, {PP:89594528}
5	84429853	1	SEAT BELT,

10.207(01) AIR SUSPENDED SEAT

SAFETY BELT

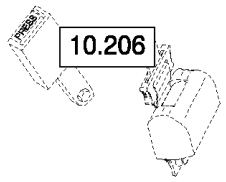

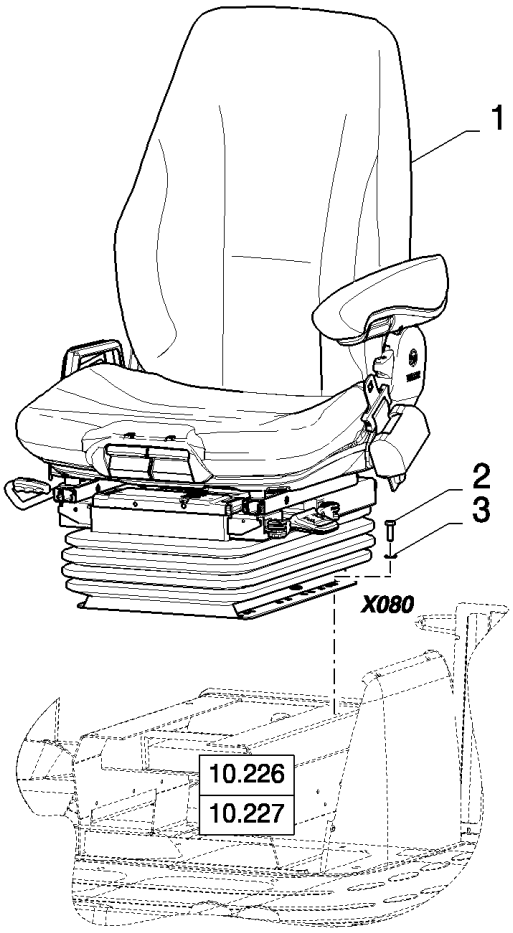

CS660 COMBINE BASE UNIT (1/03-) - Cab

10.207(01) AIR SUSPENDED SEAT

ссылка	Номер детали	Кол-во	Описание
1	84058913	1	SEAT, DRIVER, , BSN C375
1	84800527	1	SEAT, DRIVER, , BSN F376415
1	84800914	1	SEAT, DRIVER, , ASN D416
2	43127	4	BOLT, Hex, M8 x 25, 8.8,
3	322358	4	WASHER, SPRING, Belleville, M8,

10.208(01) CAB MOUNTING GROUP

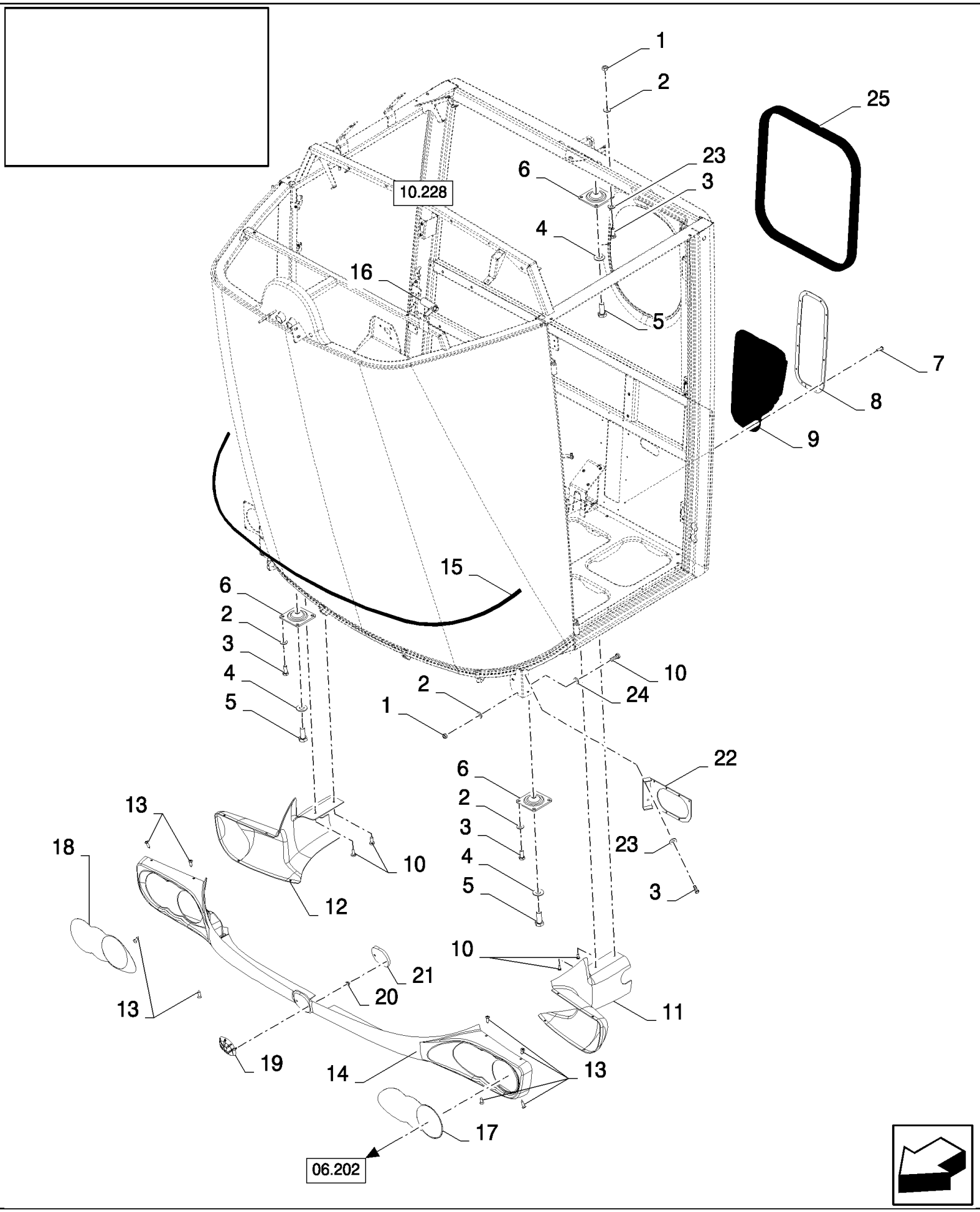

CS660 COMBINE BASE UNIT (1/03-) - Cab

10.208(01) CAB MOUNTING GROUP

ссылка	Номер детали	Кол-во	Описание
1	89706690	4	NUT, M8, Cl 8,
2	322358	6	WASHER, SPRING, Belleville, M8,
3	120104	12	BOLT, Hex, M8 x 20, 8.8,
4	140046	3	WASHER, SPRING, Belleville, M12,
5	9706687	3	BOLT, Hex, M12 x 30, 8.8,
6	84053736	3	DAMPER,
7	NS	12	NOT SERVICED, Rivet
8	84814492	1	PLATE, FIXING,
9	84807740	1	BELLOWS,
10	86508568	8	BOLT, Hex, M6 x 16, 8.8,
11	84447090	1	SKIRT, LH, ASN D306
11	84320417	1	SKIRT, LH, BSN C305
12	84447091	1	SKIRT, RH, ASN D306
12	84320425	1	SKIRT, RH, BSN C305
13	86511042	8	SCREW, Cross Pan Hd, M4 x 16,
14	84447092	1	SKIRT, , FOR CS520, CS540 ONLY, ASN D306
14	84320418	1	SKIRT, , FOR CS520, CS540 ONLY, BSN C305
14	84447089	1	SKIRT, , FOR CS640, CS660 ONLY, FOR CL560 ONLY
15	9501985	1	SEAL, {PP:89501985} L=2M
16	84433501	1	LEVER,
17	84447096	1	DECAL, , BSN C363
17	84447094	1	DECAL, , ASN D364
18	84447093	1	DECAL, , ASN D306
19	84447098	1	MAKERS BADGE, , ASN D306
20	86625060	2	NUT, LOCK, Self, Threading, 1/4", , ASN D306
21	84447432	1	SEAL, , ASN D306
22	84448480	1	SUPPORT, , ASN D364
23	86511315	16	WASHER, M8 x 16 x 1.6, , ASN D364
24	322357	8	WASHER, SPRING, Belleville, M6, , ASN D364
25	84037659	1	BAND, , ASN D432

10.209(01) CONTROL HANDLE FOR GAS ACTUATOR

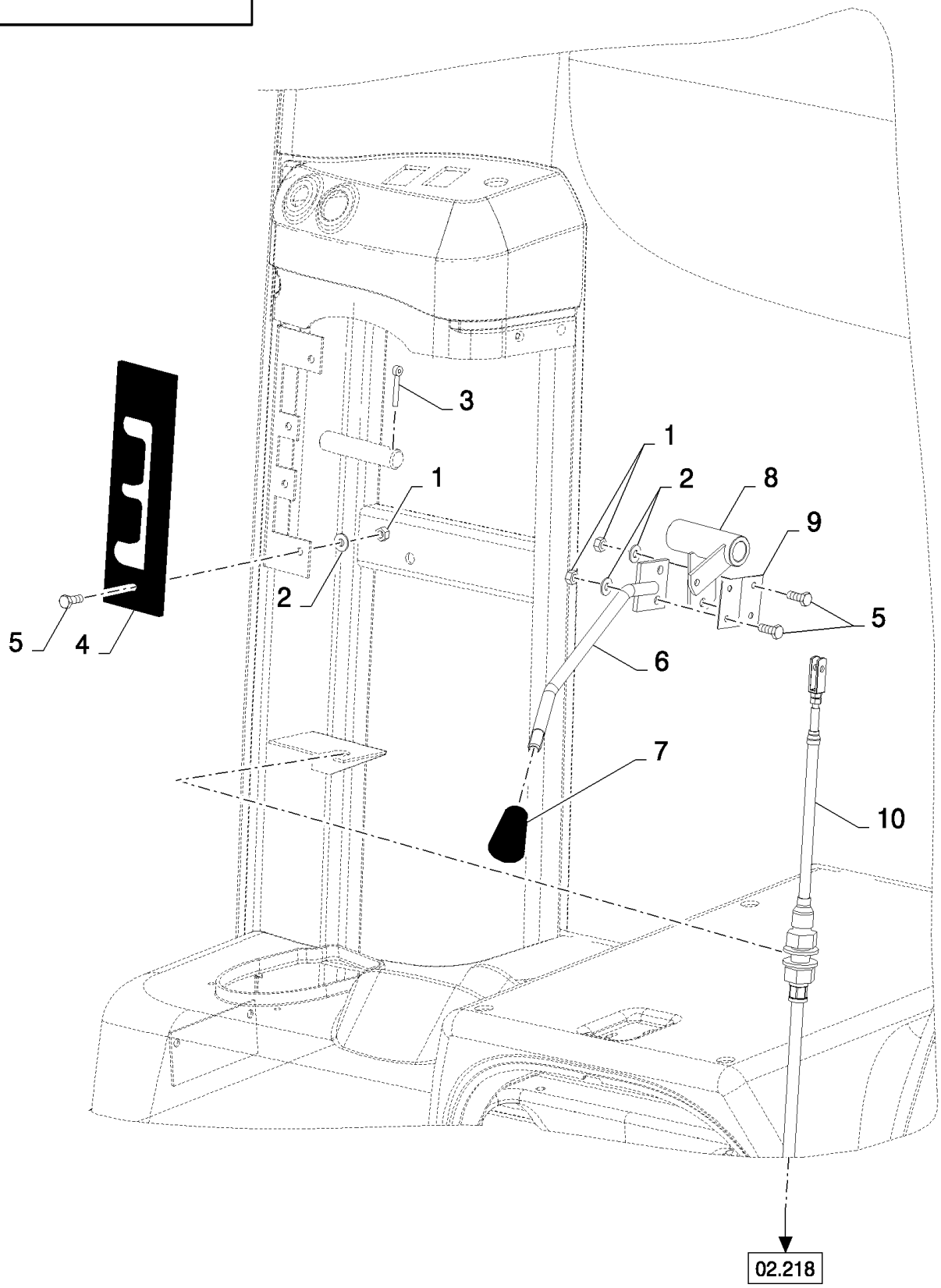

CS660 COMBINE BASE UNIT (1/03-) - Cab

10.209(01) CONTROL HANDLE FOR GAS ACTUATOR

ссылка	Номер детали	Кол-во	Описание
1	15896221	8	NUT, M6, Cl 10,
2	322357	8	WASHER, SPRING, Belleville, M6,
3	130007	1	PIN, SPLIT (COTTER), {PP:80130007} M4 x 25,
4	84431867	1	SELECTOR,
5	86508568	8	BOLT, Hex, M6 x 16, 8.8,
6	84433547	1	LEVER,
7	89818507	1	KNOB, , BSN C385
7	84455236	1	KNOB, , ASN D386
8	84433501	1	LEVER,
9	485978	1	PLATE, {PP:80485978}
10	84334446	1	CABLE,

10.210(01) RIGHT HAND CONSOLE

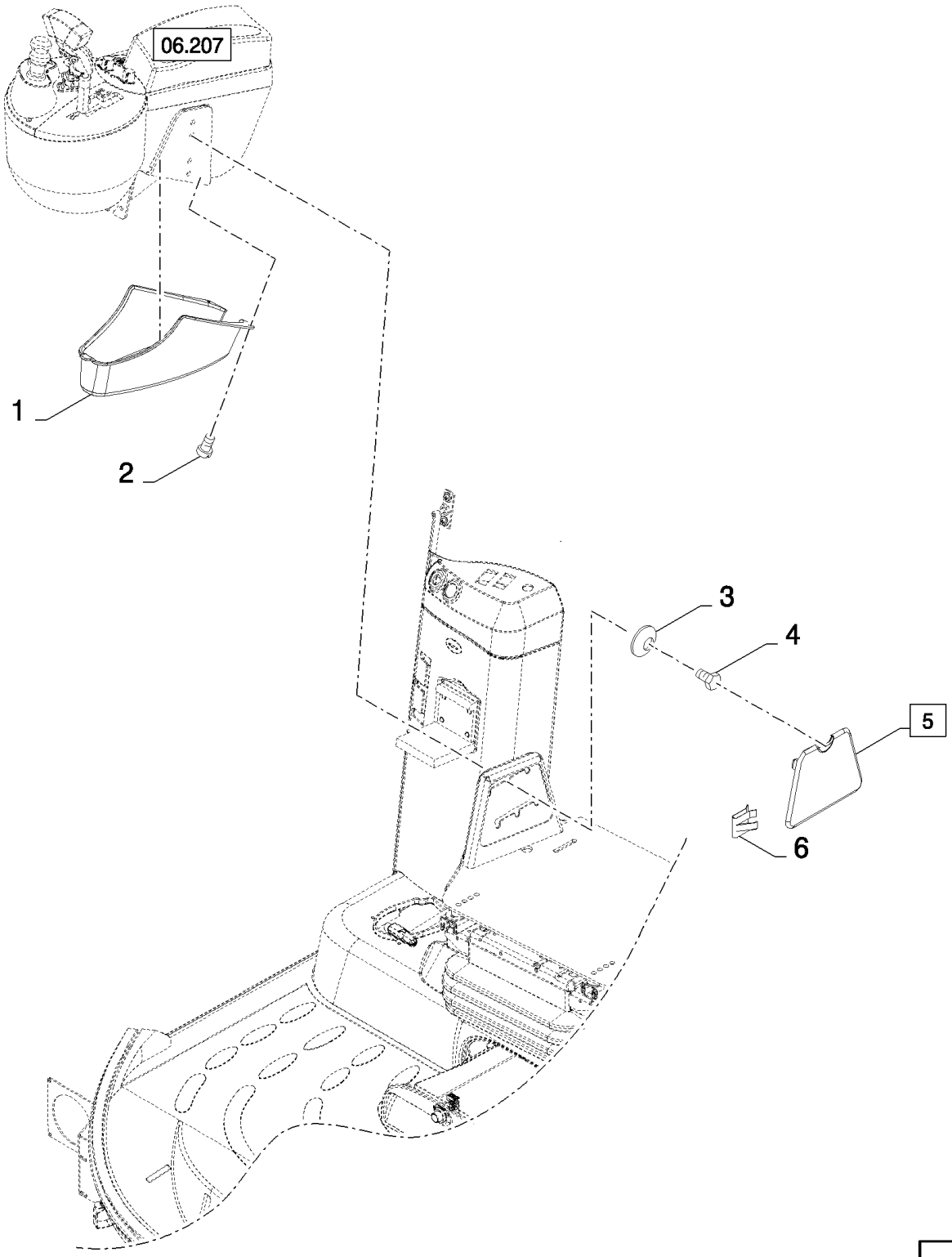

CS660 COMBINE BASE UNIT (1/03-) - Cab

10.210(01) RIGHT HAND CONSOLE

ссылка	Номер детали	Кол-во	Описание
1	84431122	1	COVER,
2	86511042	2	SCREW, Cross Pan Hd, M4 x 16,
3	322358	2	WASHER, SPRING, Belleville, M8,
4	120104	2	BOLT, Hex, M8 x 20, 8.8,
5	84814584	1	COVER, (6)
6	84814585	2	CLIP,

10.211(01) BUDDY SEAT

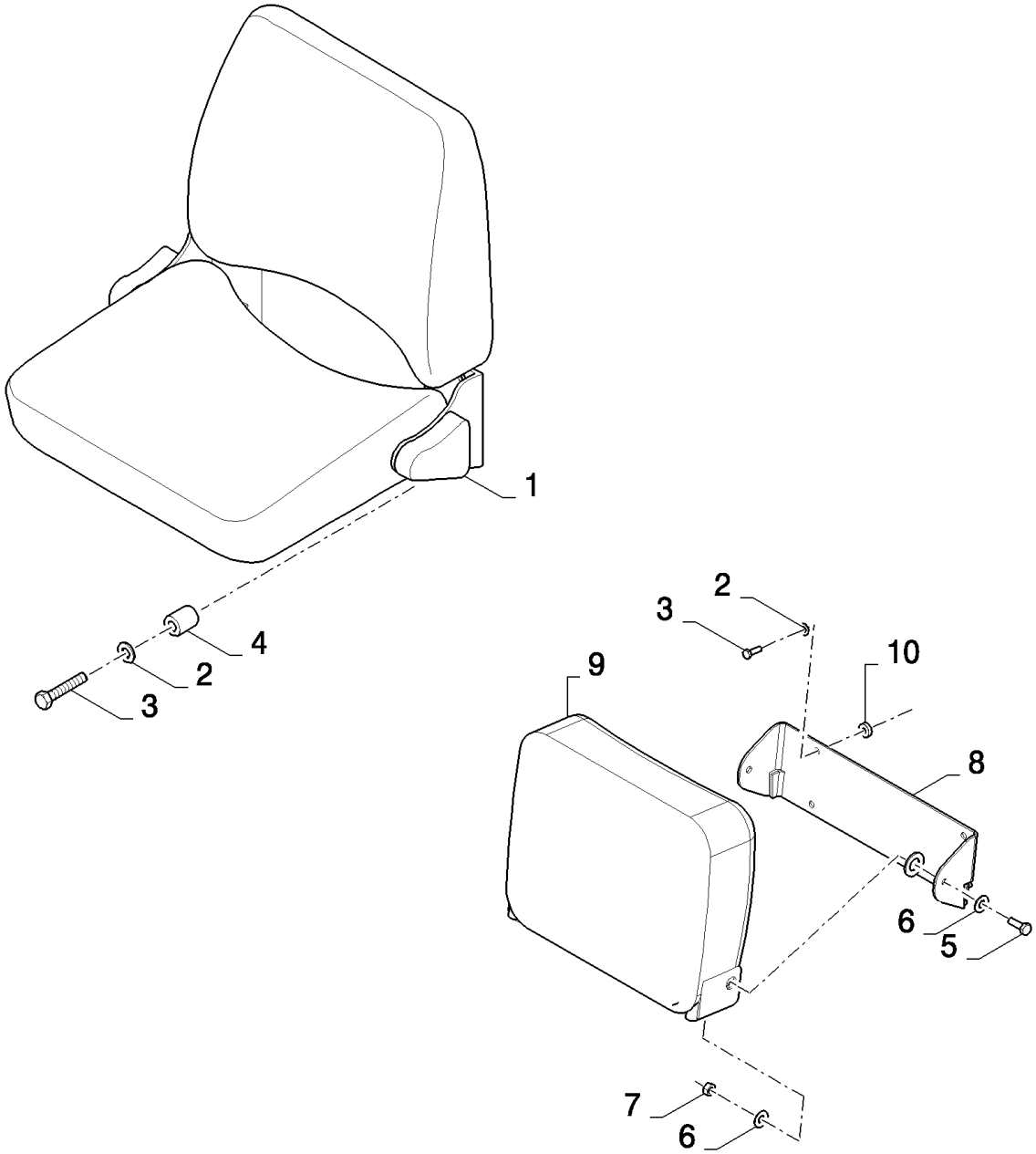

CS660 COMBINE BASE UNIT (1/03-) - Cab

10.211(01) BUDDY SEAT

ссылка	Номер детали	Кол-во	Описание
1	84015303	1	SEAT, PASSENGER, , BSN C479
2	322358	4	WASHER, SPRING, Belleville, M8,
3	43130	4	BOLT, Hex, M8 x 50, 8.8, , BSN C487
3	43127	4	BOLT, Hex, M8 x 25, 8.8, , ASN D488
4	84448099	4	BUSHING, , BSN C479
5	43139	1	SCREW, , BSN F480487
5	43138	1	BOLT, Hex, M10 x 20, 8.8, Full Thd, , ASN D488
6	140045	2	WASHER, SPRING, Belleville, M10, , BSN F480487
6	378247	1	WASHER, , ASN D488
7	100016	1	NUT, M10, Cl 8, , ASN D480
8	84801303	1	SUPPORT, , BSN F480487
8	87360754	1	SUPPORT, , ASN D488
9	84801290	1	SEAT, PASSENGER, , BSN F480487
9	87374531	1	SEAT, PASSENGER, , ASN D488
10	84037173	4	ROLLER, , ASN D488

10.212(01) HYDROSTATIC CABLE

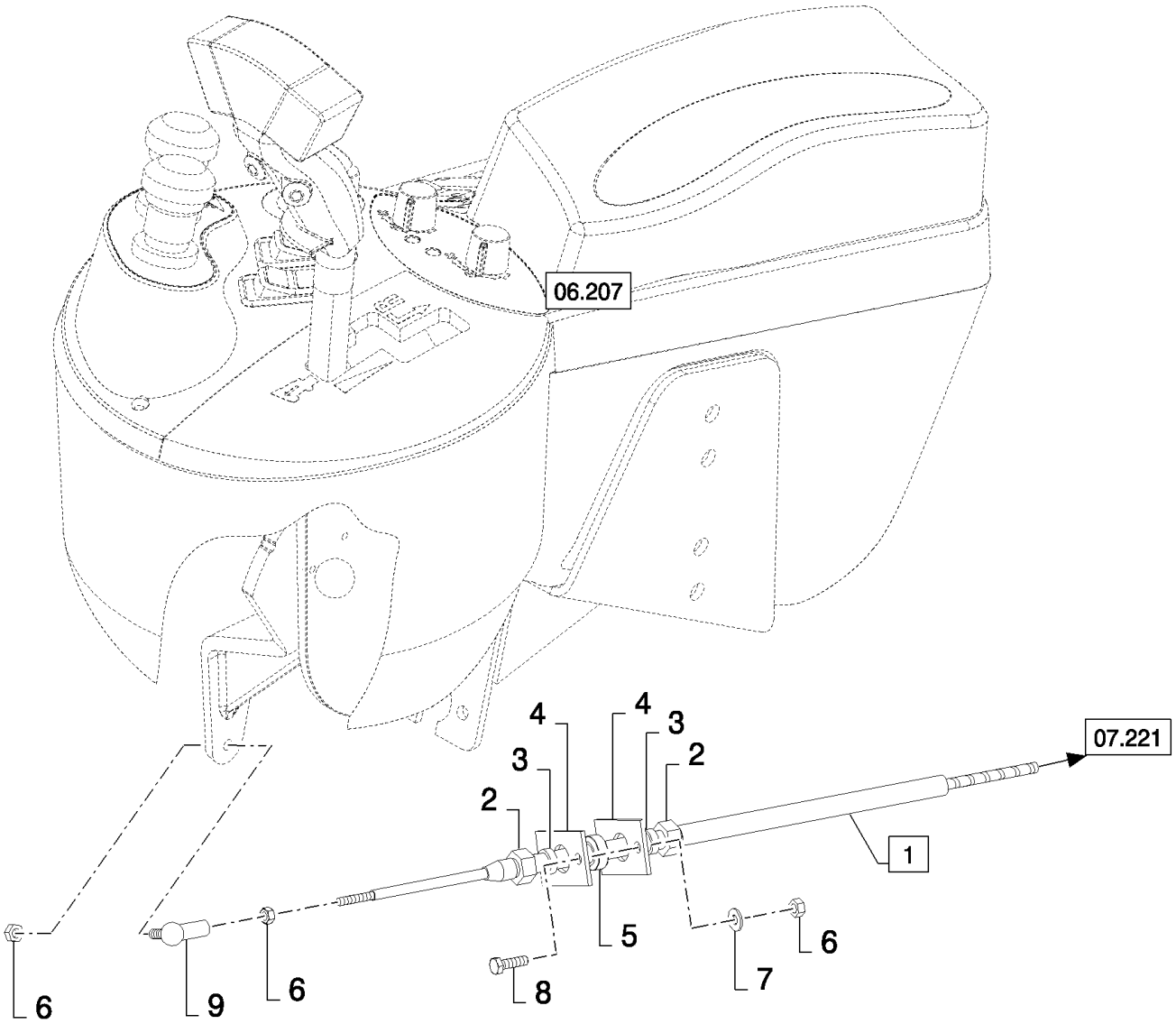

CS660 COMBINE BASE UNIT (1/03-) - Cab

10.212(01) HYDROSTATIC CABLE

ссылка	Номер детали	Кол-во	Описание
1	84807922	1	CABLE, (2 to 6)
2	354145	4	NUT, {PP:80354145} M12x1
3	750159	4	RING, {PP:80750159}
4	9508941	4	PLATE, {PP:89508941}
5	750158	2	BALL JOINT, {PP:80750158}
6	15896221	5	NUT, M6, Cl 10,
7	322357	2	WASHER, SPRING, Belleville, M6,
8	120100	2	BOLT, Hex, M6 x 20, 8.8,
9	412531	1	BALL JOINT, {PP:80412531}

10.213(01) GEARSHIFT CONTROL

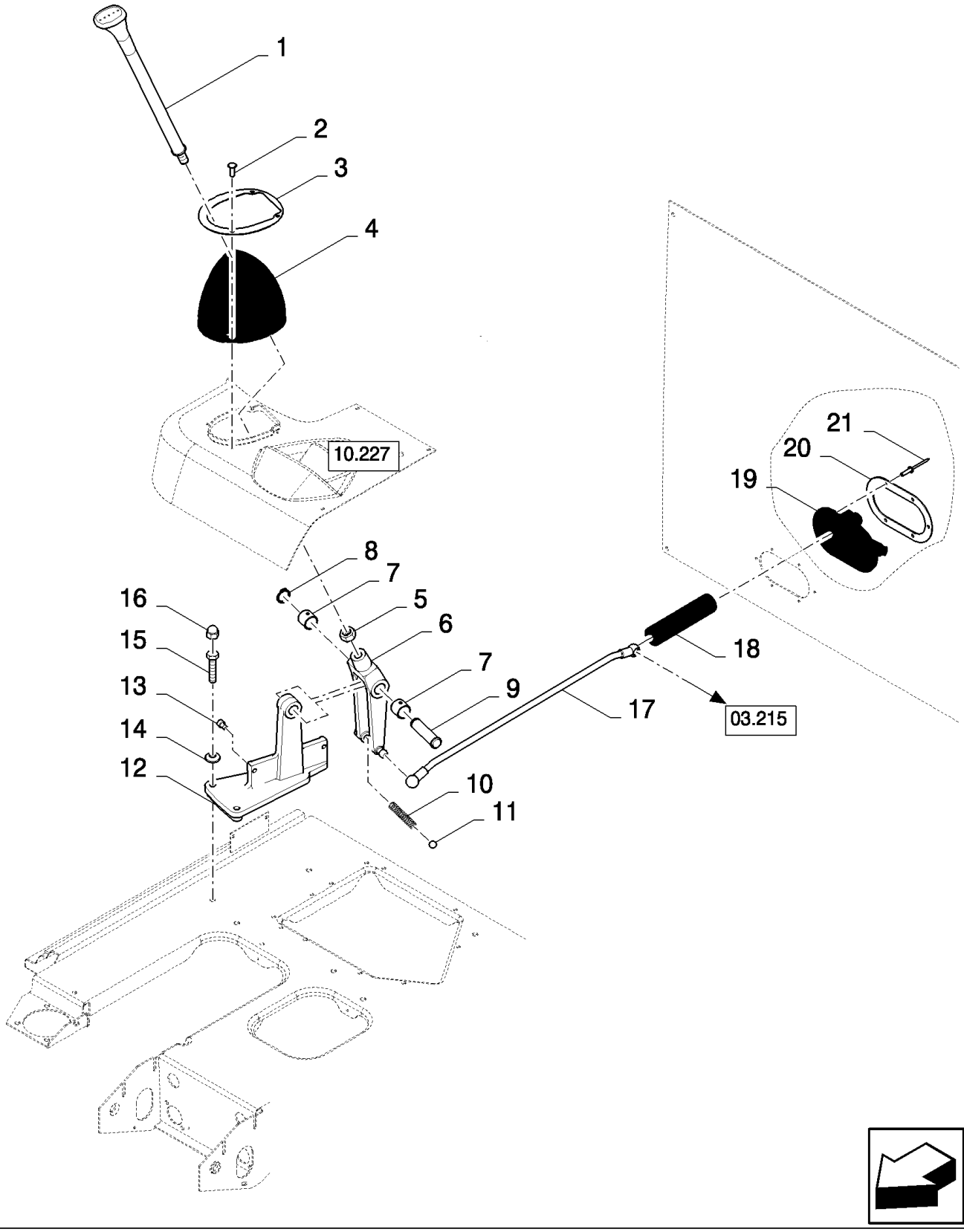

CS660 COMBINE BASE UNIT (1/03-) - Cab

10.213(01) GEARSHIFT CONTROL

ссылка	Номер детали	Кол-во	Описание
1	84077265	1	HANDLE,
2	84607894	4	PLUG,
3	84433803	1	PLATE, COVER,
4	84320415	1	BELLOWS,
5	364164	1	NUT, {PP:80364164} Thin, M16 x 1.5, Cl 04, M16x1.5
6	84433403	1	LEVER,
7	420761	2	BUSHING, {PP:80420761}
8	370024	1	RING, SNAP, {PP:80370024} M20, Ext,
9	9831112	1	PIN, {PP:89831112}
10	84041522	1	SPRING,
11	84041521	1	BALL,
12	84433432	1	SUPPORT,
13	86566099	2	SCREW, Hex Soc Hd, M8 x 16, 12.9, M8x16
14	140045	3	WASHER, SPRING, Belleville, M10,
15	120112	3	BOLT, Hex, M10 x 40, 8.8, Full Thd,
15	120069	3	BOLT, Hex, M10 x 50, 8.8, , FOR CL560 ONLY
16	747886	3	NUT, {PP:80747886}
17	84433028	1	ROD, , BSN C487
17	87315710	1	ROD, CONNECTING, , ASN D488
18	NS	1	NOT SERVICED, L=0.125M
19	84442338	1	SEAL PROTECTION,
20	84442343	1	PLATE, FIXING,
21	NS	6	NOT SERVICED, Rivet

10.214(01) FIRE EXTINGUISHER

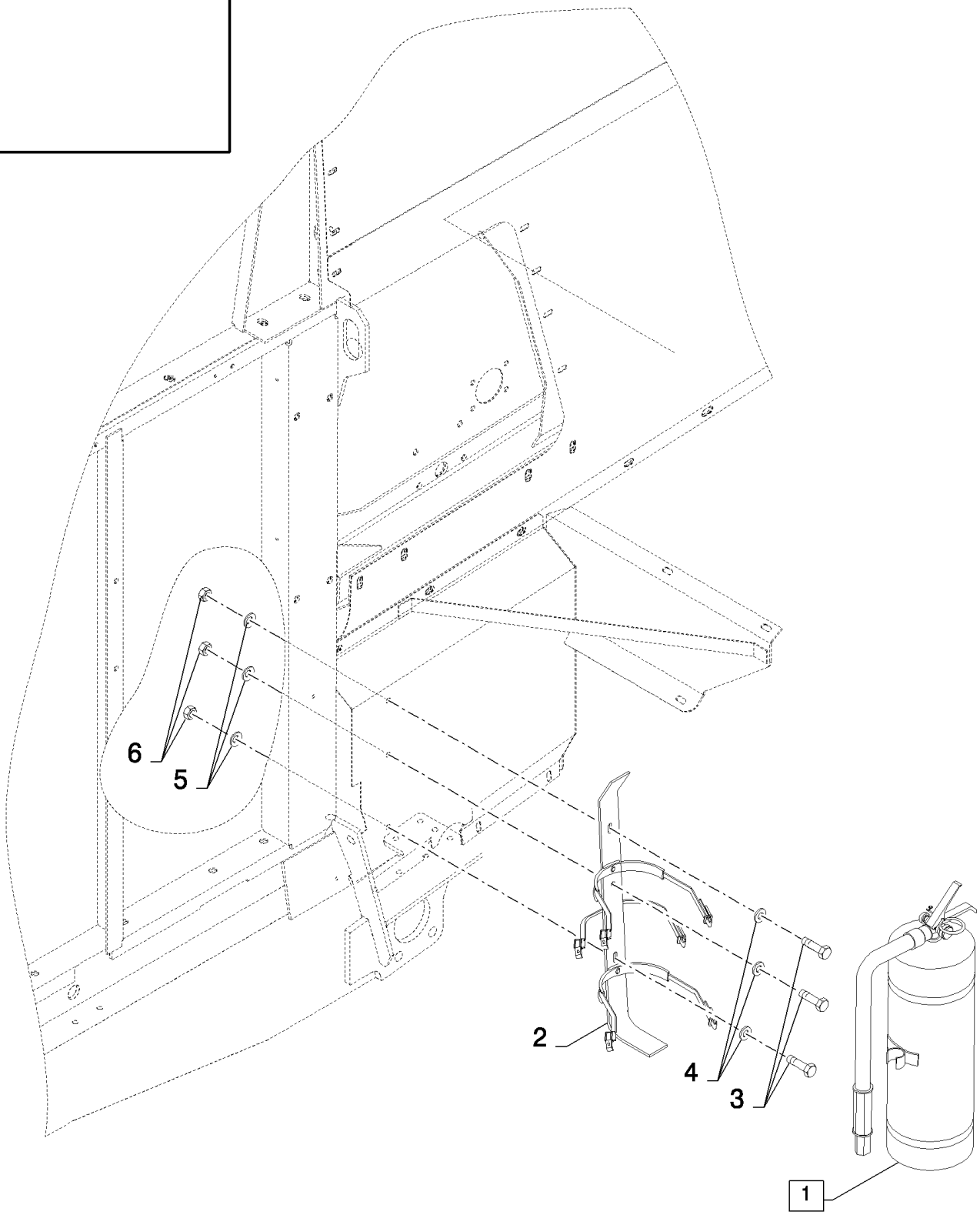

CS660 COMBINE BASE UNIT (1/03-) - Cab

10.214(01) FIRE EXTINGUISHER

ссылка	Номер детали	Кол-во	Описание
1	NS	1	NOT SERVICED, (2)
2	NSS	1	NOT SERVICED SEPARATELY,
3	120104	3	BOLT, Hex, M8 x 20, 8.8,
4	140016	3	WASHER, M8 x 16 x 1.6,
5	412650	3	WASHER, SPRING, Belleville, M8,
6	89706690	3	NUT, M8, Cl 8,

10.215(01) CAB ROOF LIGHTS

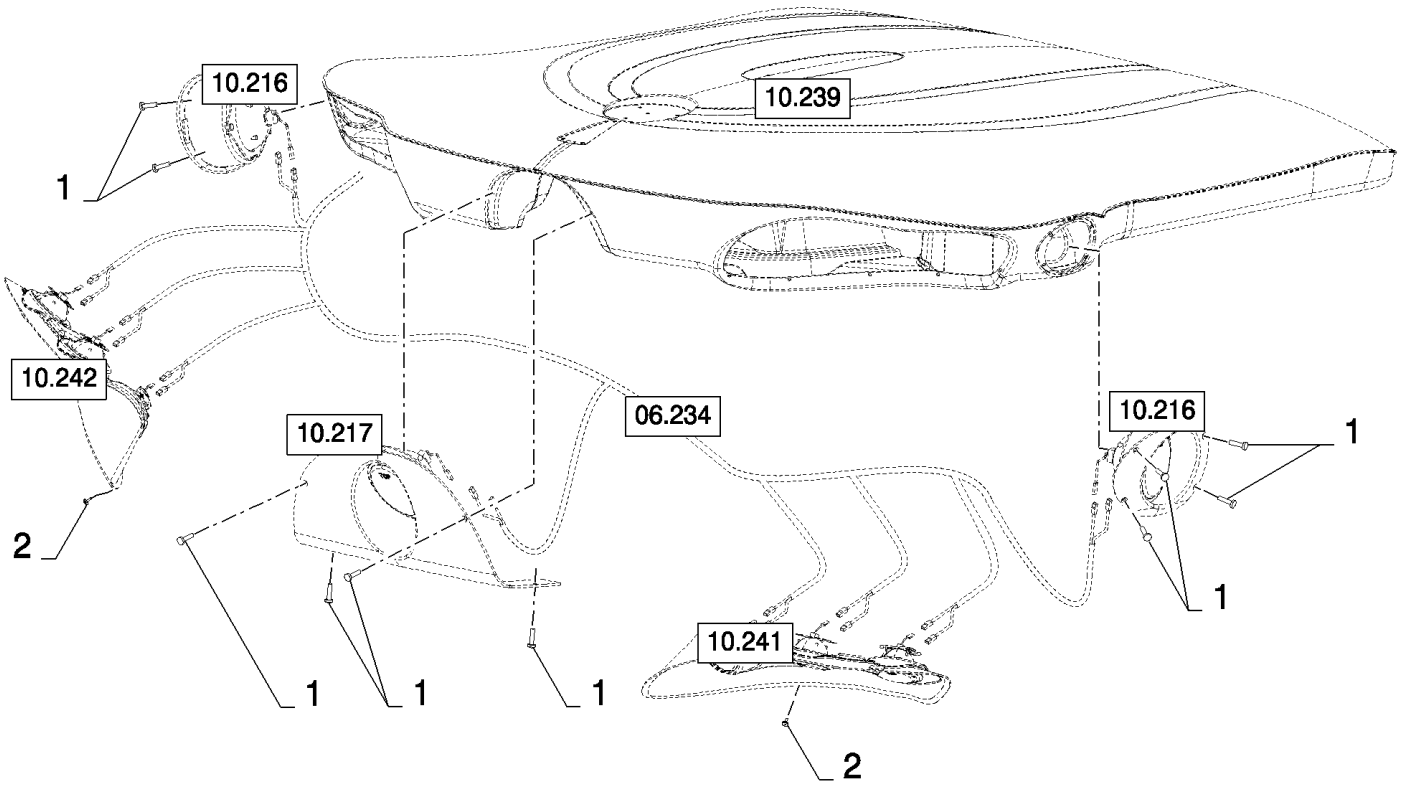

CS660 COMBINE BASE UNIT (1/03-) - Cab

10.215(01) CAB ROOF LIGHTS

ссылка	Номер детали	Кол-во	Описание
1	86511042	12	SCREW, Cross Pan Hd, M4 x 16,
2	84814639	18	

10.216(01) CAB ROOF LIGHTS, LH AND RH

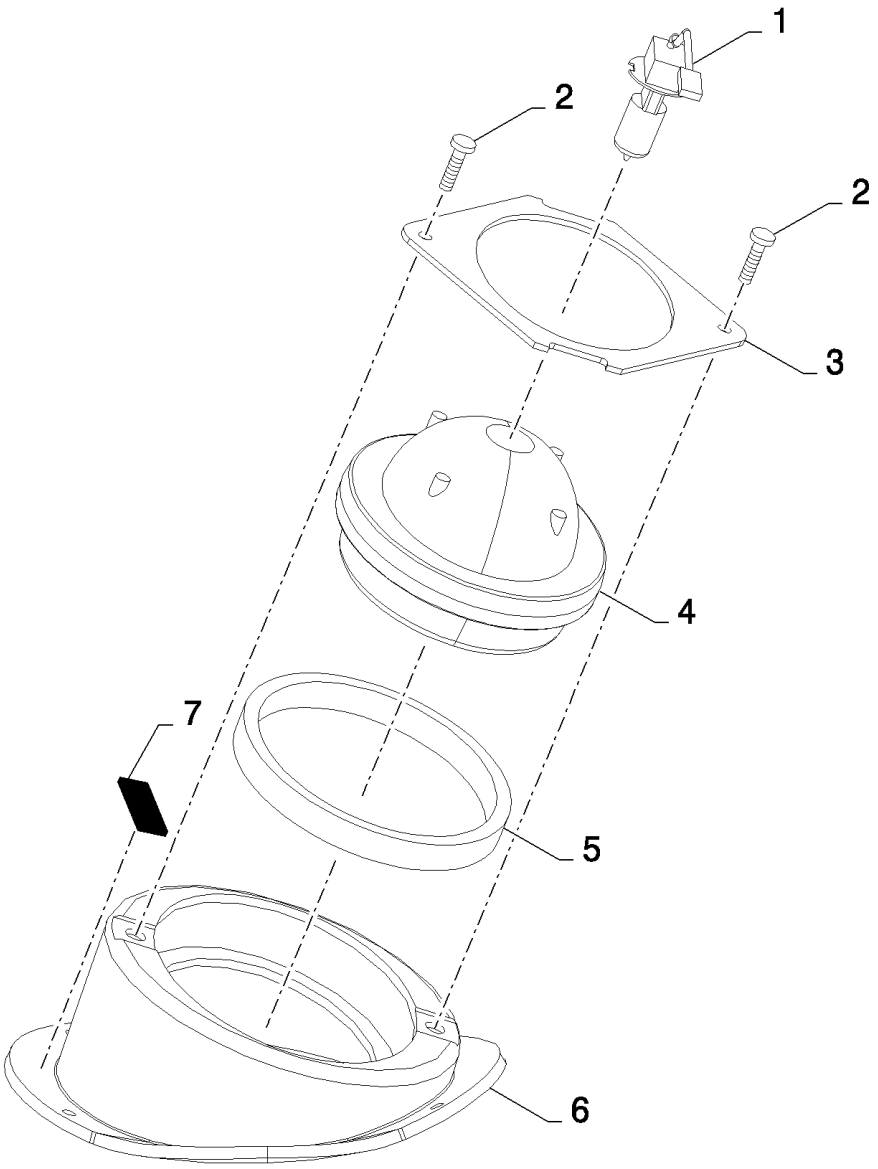

CS660 COMBINE BASE UNIT (1/03-) - Cab

10.216(01) CAB ROOF LIGHTS, LH AND RH

ссылка	Номер детали	Кол-во	Описание
1	417720	1	BULB, {PP:80417720}
2	86511042	2	SCREW, Cross Pan Hd, M4 x 16,
3	84431845	1	PLATE,
4	84320764	1	LAMP,
5	84814420	1	SEAL,
6	84320398	1	ARMATURE, LH
6	84320390	1	ARMATURE, RH
7	NSS	AR	NOT SERVICED SEPARATELY,

10.217(01) CAB ROOF LIGHTS, MIDDLE

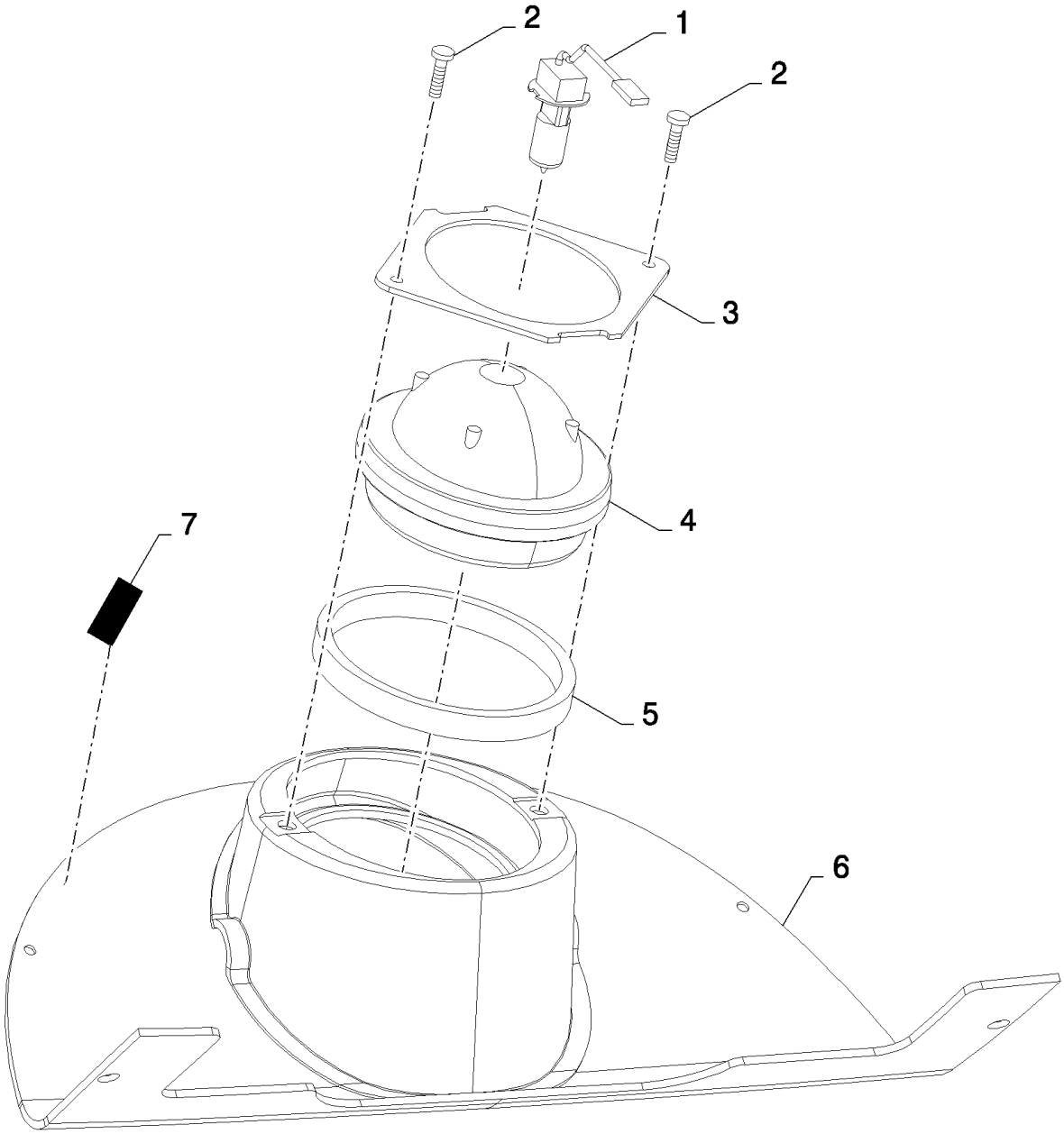

CS660 COMBINE BASE UNIT (1/03-) - Cab

10.217(01) CAB ROOF LIGHTS, MIDDLE

ссылка	Номер детали	Кол-во	Описание
1	417720	1	BULB, {PP:80417720}
2	86511042	2	SCREW, Cross Pan Hd, M4 x 16,
3	84431845	1	PLATE,
4	84320764	1	LAMP,
5	84814420	1	SEAL,
6	84320394	1	ARMATURE,
7	NSS	AR	NOT SERVICED SEPARATELY,

10.218(01) WARNING LIGHTS

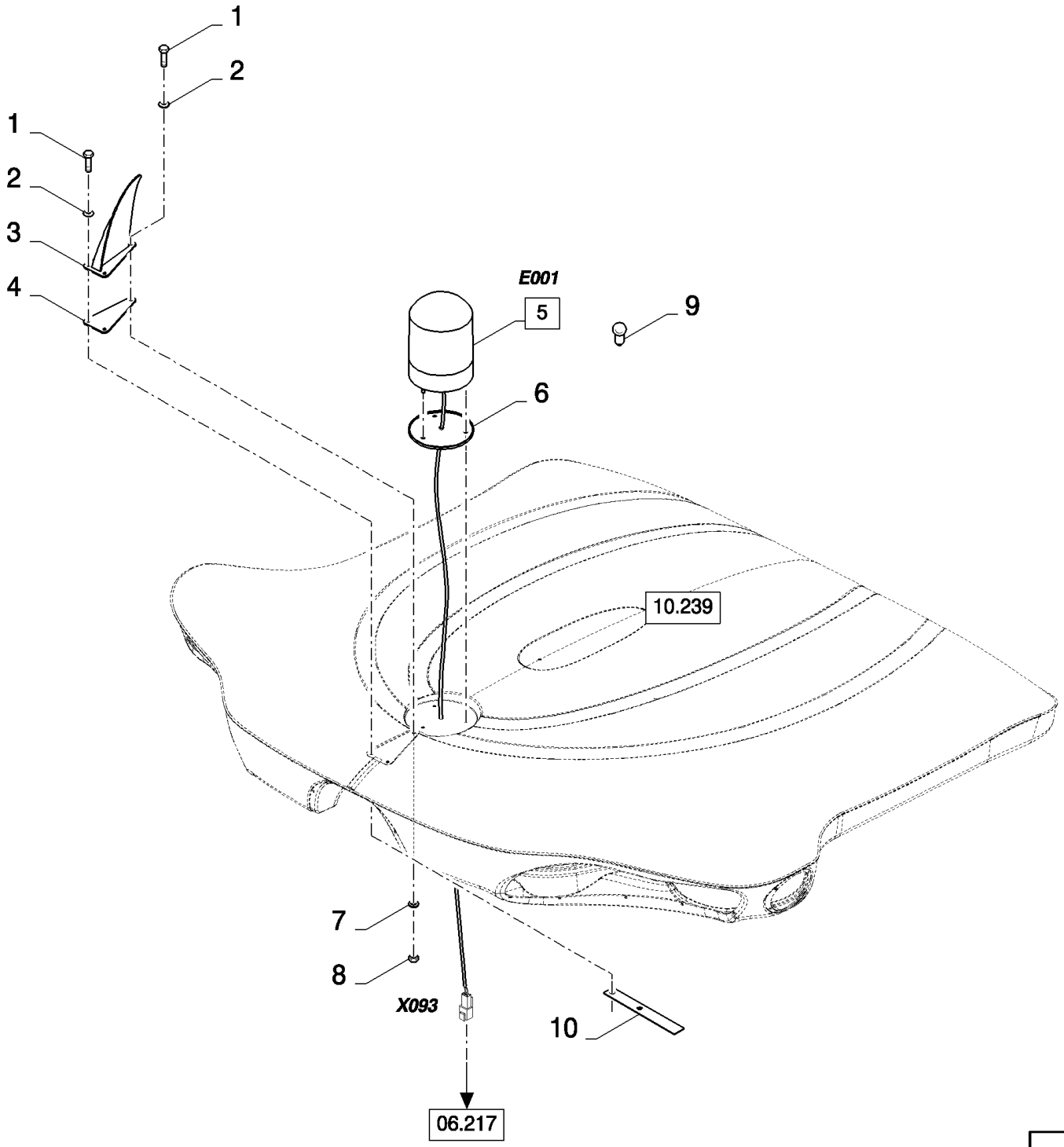

CS660 COMBINE BASE UNIT (1/03-) - Cab

10.218(01) WARNING LIGHTS

ссылка	Номер детали	Кол-во	Описание
1	43117	3	BOLT, Hex, M6 x 30, 8.8,
2	322357	3	WASHER, SPRING, Belleville, M6,
2	9824259	3	WASHER, M6 x 12 x 1.6,
3	84807325	1	PLATE, , BSN C431
3	84801125	1	PLATE, , ASN D432
4	84443967	1	SEAL,
5	84067911	1	BEACON, (6,9), SEE FIGURE 06.701, BSN C479
5	87050694	1	BEACON, (6,9), SEE FIGURE 06.701, ASN D480
6	NSS	1	NOT SERVICED SEPARATELY,
7	9824259	3	WASHER, M6 x 12 x 1.6,
7	84007539	4	WASHER, 6MM
8	15896221	3	NUT, M6, Cl 10,
9	86616248	1	BULB, #HI, 55w,
10	84807642	1	PLATE, FIXING,

10.219(01) CAB ROOF, REAR VIEW MIRROR

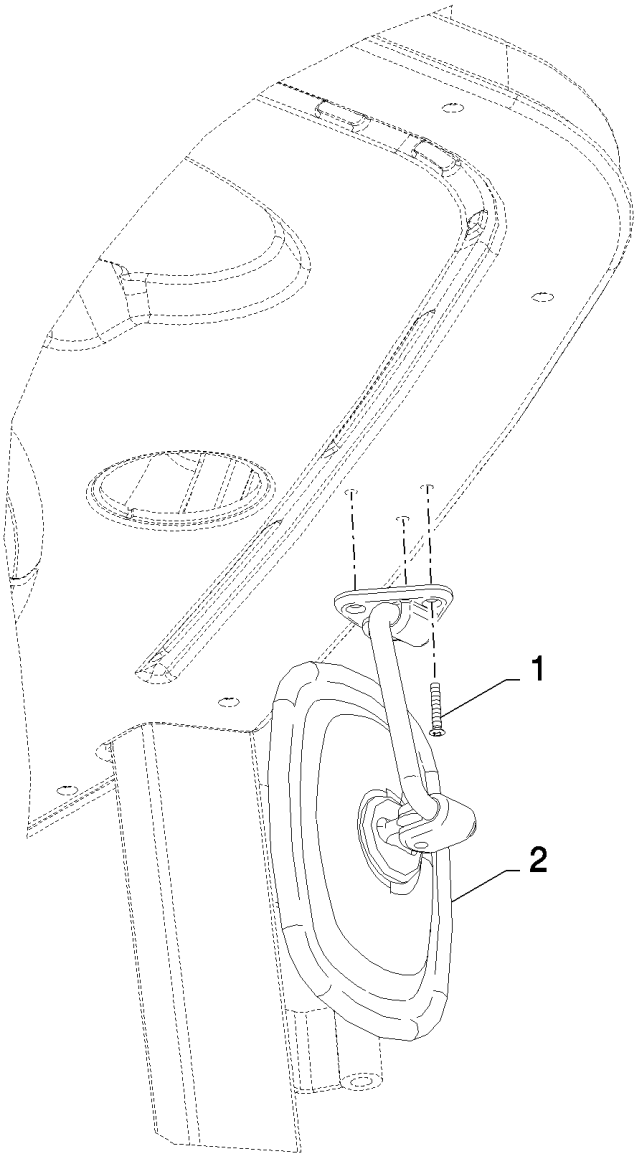

CS660 COMBINE BASE UNIT (1/03-) - Cab

10.219(01) CAB ROOF, REAR VIEW MIRROR

ссылка	Номер детали	Кол-во	Описание
1	412477	3	SCREW, {PP:80412477} Cross Oval Hd, M4 x 25, M4x25
2	84400453	1	MIRROR, REAR-VIEW,

10.220(01) OPERATOR'S PLATFORM LADDER

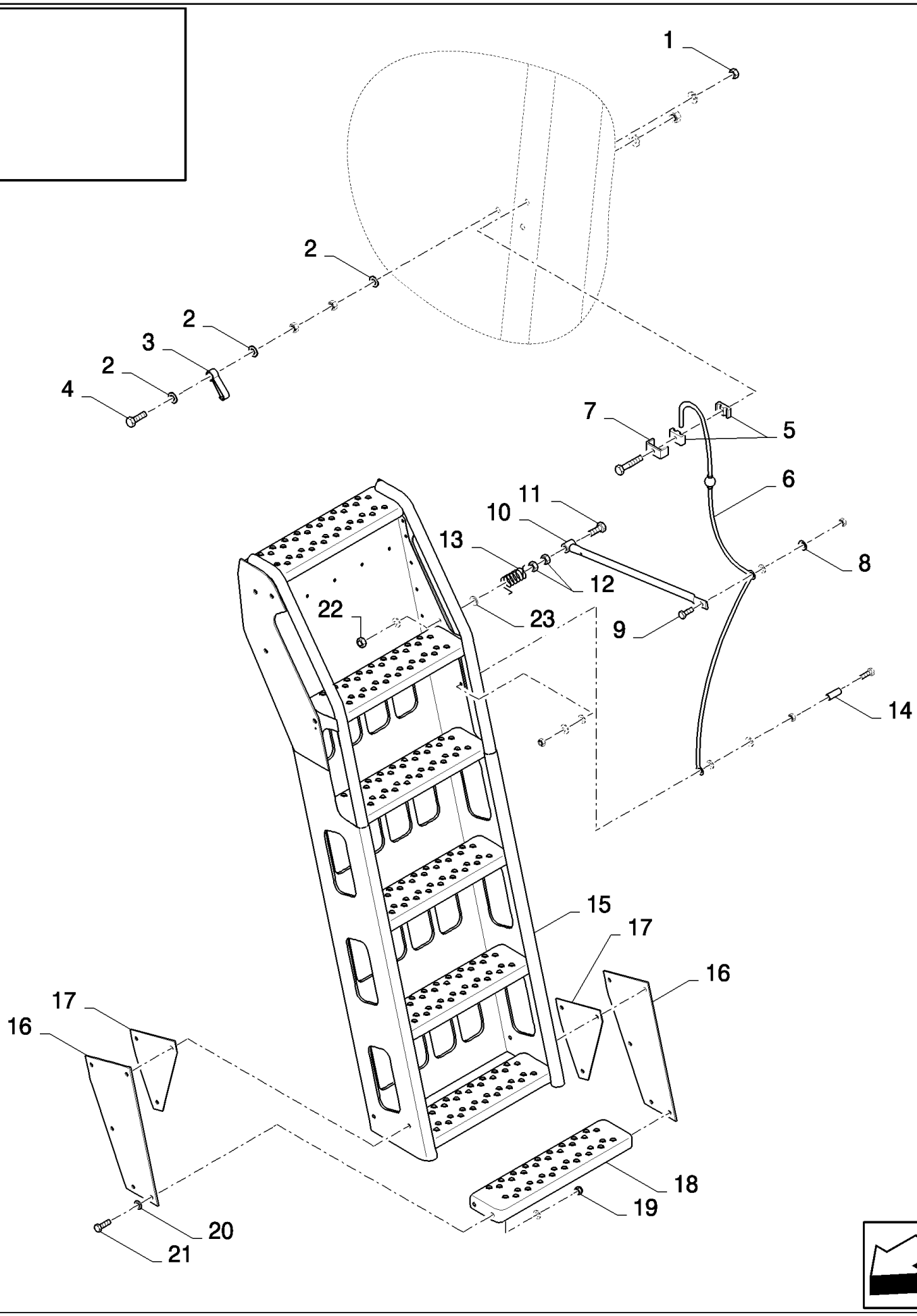

CS660 COMBINE BASE UNIT (1/03-) - Cab

10.220(01) OPERATOR'S PLATFORM LADDER

ссылка	Номер детали	Кол-во	Описание
1	412649	1	WASHER, SPRING, Belleville, M6,
2	412152	3	NUT, LOCK, {PP:80412152} M6 x 1, Cl 8.8,
3	354957	1	HOOK, {PP:80354957}
4	43130	1	BOLT, Hex, M8 x 50, 8.8,
5	430357	2	CLAMP, {PP:80430357}
6	84022066	1	ROPE, , BSN C479
6	87328127	1	ROPE, , ASN D480
7	431941	1	SUPPORT,
8	322358	4	WASHER, SPRING, Belleville, M8,
9	43128	1	BOLT, Hex, M8 x 30, 8.8,
10	84807562	1	LEVER, , BSN C363
10	84449275	1	LEVER, , ASN D364
11	120115	1	SCREW, Hex, M10 x 70, 8.8, Full Thd, , BSN C363
11	86977784	1	SCREW, M8x60, ASN D364
12	100016	8	NUT, M10, Cl 8, , BSN C363
12	89706690	1	NUT, M8, Cl 8, , ASN D364
13	84014761	1	SPRING,
14	NS	1	NOT SERVICED,
15	84807561	1	LADDER,
16	84035267	2	PLATE, COVER,
17	84439187	2	PLATE, COVER,
18	84807539	1	STEP,
19	9628098	10	NUT, LOCK, M8 x 1.25, Cl 10,
20	140041	23	WASHER, M8 x 28 x 3,
21	412479	10	BOLT, Hex, M8 x 35, 8.8,
22	412250	1	NUT, LOCK, M8 x 1.25, Cl 8, , ASN D364
23	378243	2	WASHER, M8, , ASN D364

10.221(01) OPERATOR'S PLATFORM LADDER

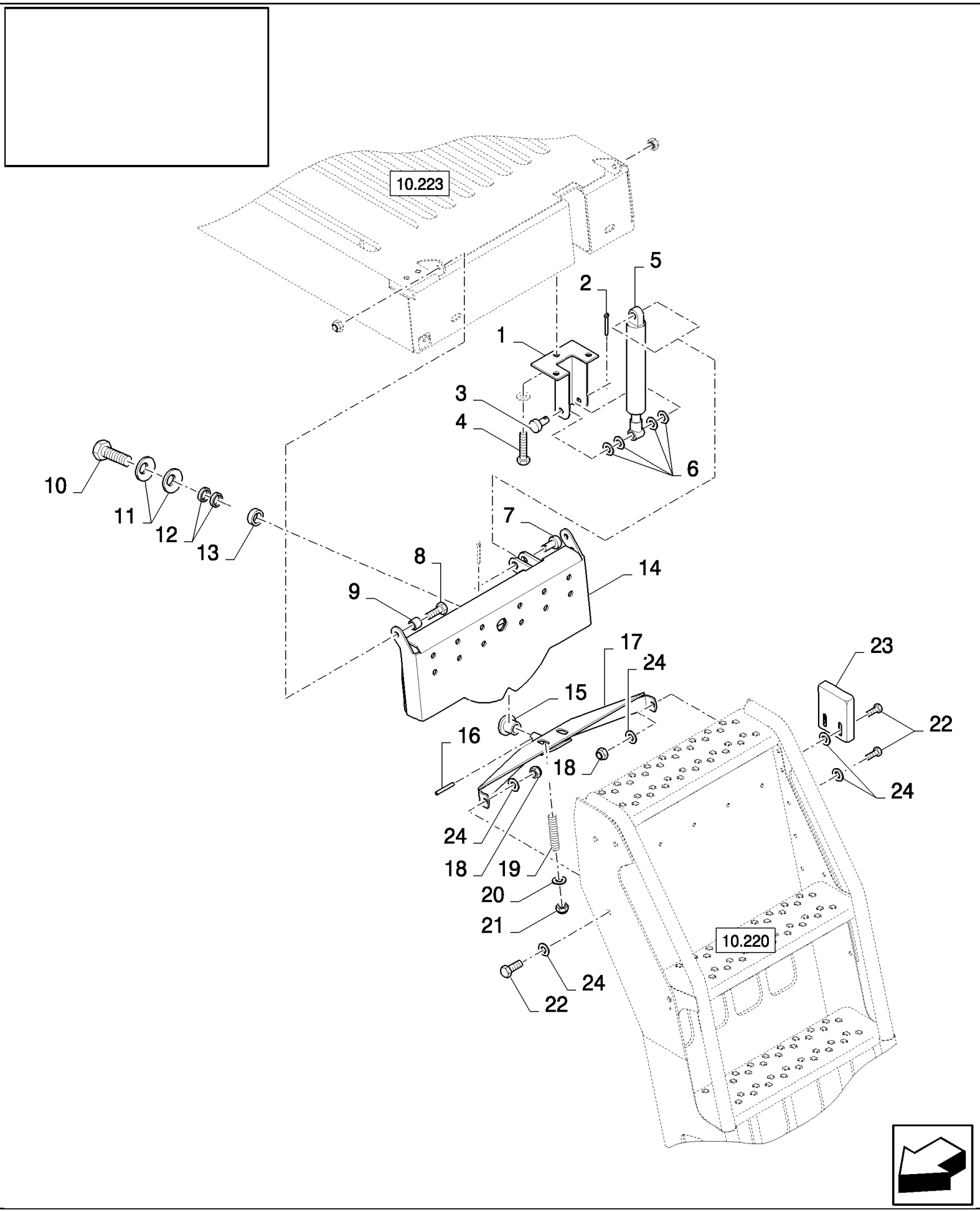

CS660 COMBINE BASE UNIT (1/03-) - Cab

10.221(01) OPERATOR'S PLATFORM LADDER

ссылка	Номер детали	Кол-во	Описание
1	84439212	1	SUPPORT,
2	130003	2	PIN, SPLIT (COTTER), {PP:80130003} M3.2 x 20,
3	379547	1	PIN, CLEVIS, {PP:80379547} M10 x 60,
4	120112	3	BOLT, Hex, M10 x 40, 8.8, Full Thd,
5	89818978	1	SHOCK ABSORBER,
6	140079	4	WASHER, {PP:80140079}
7	390040	1	PIN, CLEVIS, {PP:80390040} M10 x 35,
8	43140	2	BOLT, Hex, M10 x 30, 8.8, Full Thd,
9	9838548	2	BUSHING, {PP:89838548}
10	120090	1	BOLT, Hex, M16 x 50, 8.8,
11	325594	2	WASHER, {PP:80325594}
12	748217	2	PLATE, ADJUSTING, {PP:80748217}
13	458871	1	RING, {PP:80458871}
14	84807538	1	SUPPORT,
15	913654	1	RING, {PP:80913654}
16	9510330	1	PIN, ROLL, {PP:89510330}
17	84807536	1	SUPPORT,
18	100037	4	NUT, M10 x 1.5, Cl 8,
19	9509233	2	SPRING, {PP:89509233}
20	140042	2	WASHER, {PP:80140042} M10 x 34 x 3,
21	412141	2	NUT, LOCK, M10 x 1.5, Cl 8,
22	43138	4	BOLT, Hex, M10 x 20, 8.8, Full Thd,
23	84807534	1	SUPPORT,
24	140045	15	WASHER, SPRING, Belleville, M10,

10.222(01) OPERATOR'S PLATFORM, RH

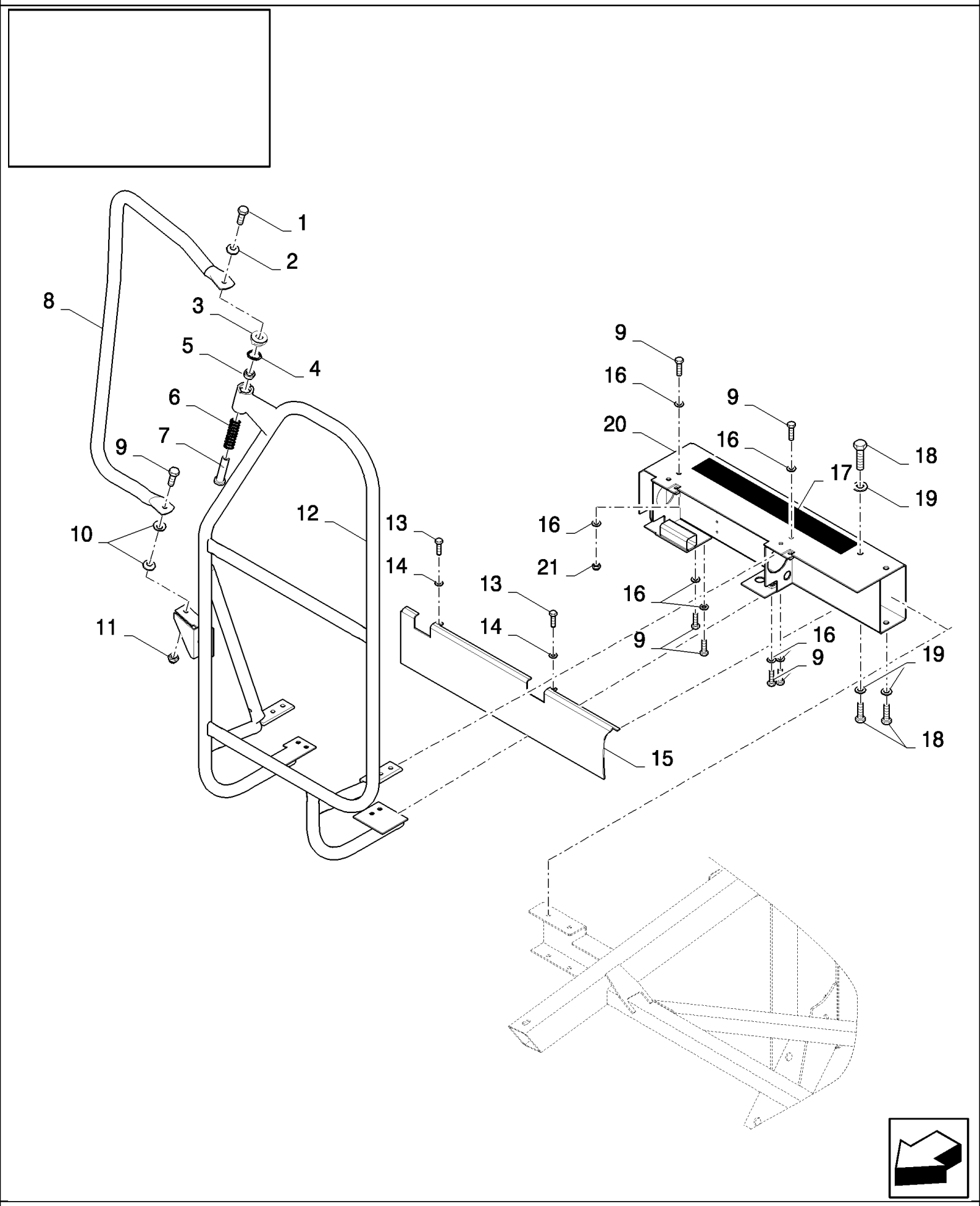

CS660 COMBINE BASE UNIT (1/03-) - Cab

10.222(01) OPERATOR'S PLATFORM, RH

ссылка	Номер детали	Кол-во	Описание
1	120203	1	SCREW, {PP:80120203} Hex Flat Hd, M8 x 20, 4.8, M8x16
2	412650	1	WASHER, SPRING, Belleville, M8,
3	84002212	1	BUSHING,
4	278643	1	RING, SNAP, {PP:80278643} M24, Int,
5	419176	1	RING, {PP:80419176}
6	754891	1	SPRING, {PP:80754891}
7	84002211	1	PIN,
8	84077927	1	SUPPORT, LH
9	43128	9	BOLT, Hex, M8 x 30, 8.8,
10	322358	2	WASHER, SPRING, Belleville, M8,
11	86629542	1	NUT, LOCK, M8 x 1.25, Cl 8,
12	84814026	1	HANDRAIL,
13	120100	2	BOLT, Hex, M6 x 20, 8.8,
14	322357	2	WASHER, SPRING, Belleville, M6,
15	84807981	1	PLATE,
16	86511315	8	WASHER, M8 x 16 x 1.6,
17	401502	1	STRIP, ANTI-SKID, {PP:80401502} 51mm x 18.3 Roll - Cut to Size
18	43140	4	BOLT, Hex, M10 x 30, 8.8, Full Thd,
19	86511323	9	WASHER, M10 x 20 x 2,
20	84807974	1	SUPPORT,
21	89706690	4	NUT, M8, Cl 8,
1	16043224	1	BOLT, Hex, M8 x 16, 8.8, Full Thd,

10.223(01) OPERATOR'S PLATFORM, LH

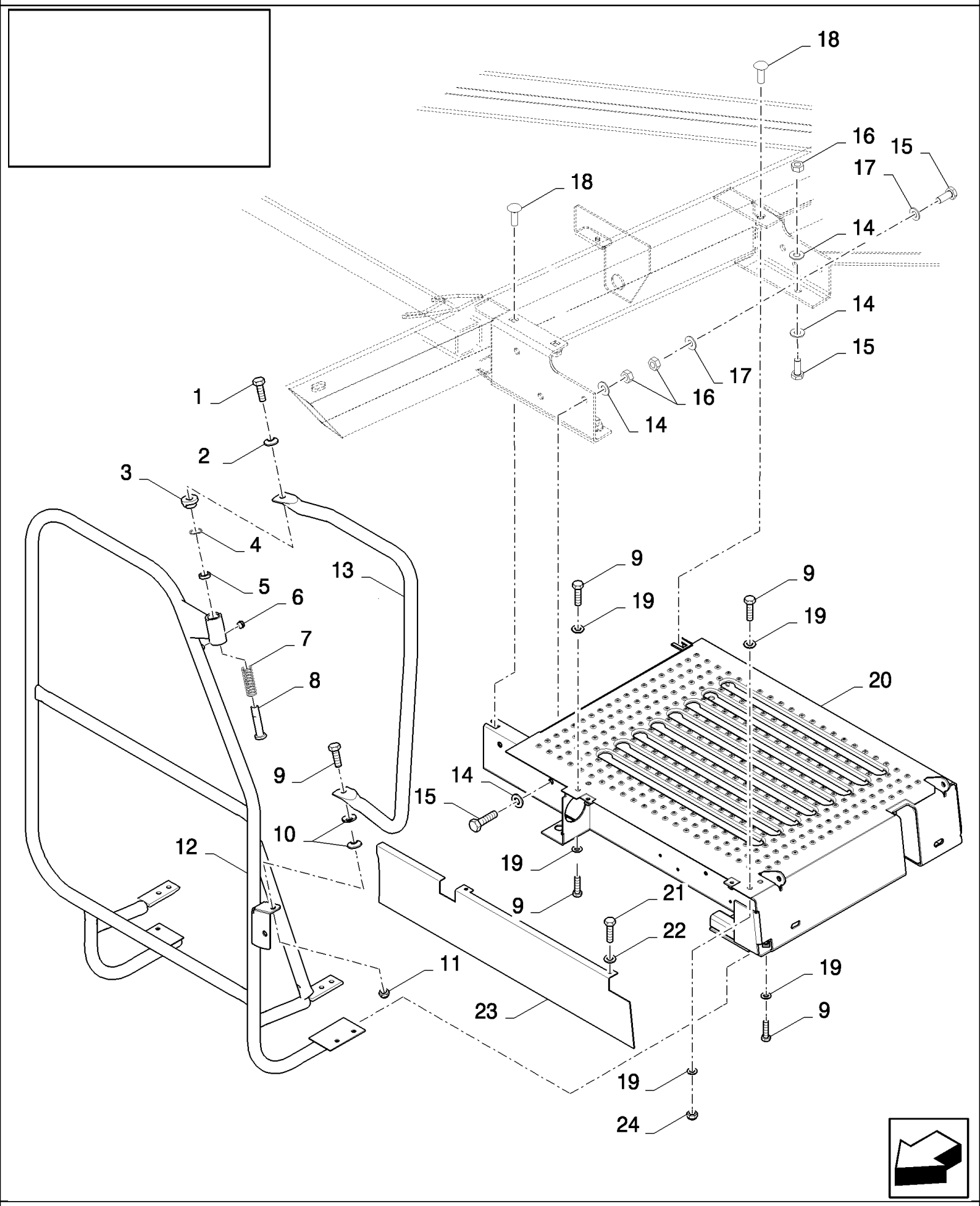

CS660 COMBINE BASE UNIT (1/03-) - Cab

10.223(01) OPERATOR'S PLATFORM, LH

ссылка	Номер детали	Кол-во	Описание
1	16043224	1	BOLT, Hex, M8 x 16, 8.8, Full Thd,
2	412650	1	WASHER, SPRING, Belleville, M8,
3	84002212	1	BUSHING,
4	278643	1	RING, SNAP, {PP:80278643} M24, Int,
5	419176	1	RING, {PP:80419176}
6	336455	1	PLUG, {PP:80336455}
7	754891	1	SPRING, {PP:80754891}
8	84002211	1	PIN,
9	43128	9	BOLT, Hex, M8 x 30, 8.8,
10	322358	2	WASHER, SPRING, Belleville, M8,
11	86629542	1	NUT, LOCK, M8 x 1.25, Cl 8,
12	84814008	1	HANDRAIL,
13	84077980	1	SUPPORT, RH
14	140045	12	WASHER, SPRING, Belleville, M10,
15	43139	9	SCREW, {PP:80043139} M10x25
16	100016	12	NUT, M10, Cl 8,
17	86511323	4	WASHER, M10 x 20 x 2,
18	86512446	3	BOLT, CARRIAGE, Short NK, M10 x 30, Cl8.8, Full Thd,
19	86511315	8	WASHER, M8 x 16 x 1.6,
20	84807956	1	PLATFORM,
21	120100	2	BOLT, Hex, M6 x 20, 8.8,
22	322357	2	WASHER, SPRING, Belleville, M6,
23	84807980	1	PLATE,
24	89706690	4	NUT, M8, Cl 8,
1	16043224	1	BOLT, Hex, M8 x 16, 8.8, Full Thd,

10.224(01) OPERATOR'S PLATFORM, EXTENSIONS

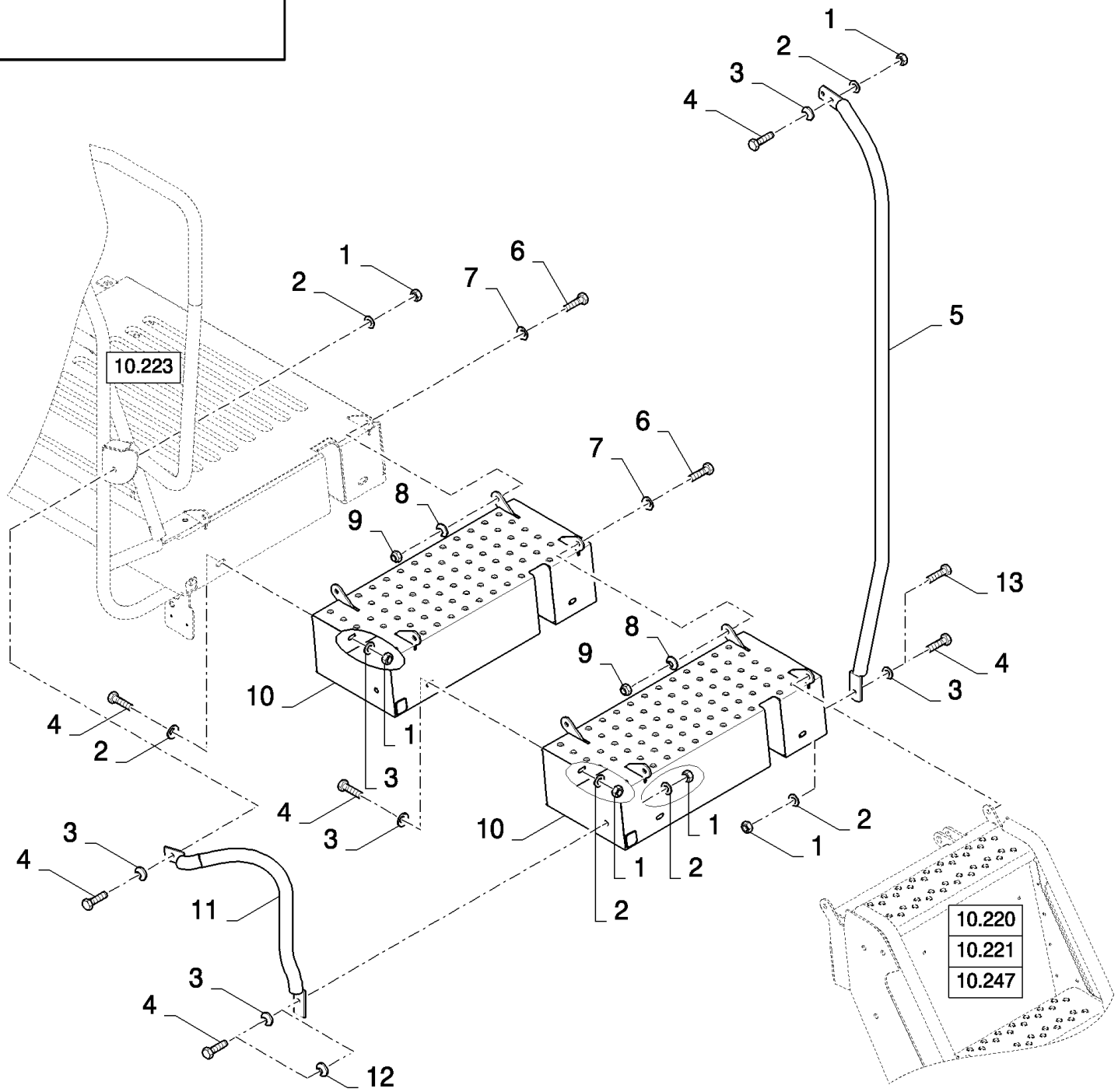

CS660 COMBINE BASE UNIT (1/03-) - Cab

10.224(01) OPERATOR'S PLATFORM, EXTENSIONS

ссылка	Номер детали	Кол-во	Описание
1	89706690	AR	NUT, M8, Cl 8,
2	322358	AR	WASHER, SPRING, Belleville, M8,
3	140016	AR	WASHER, M8 x 16 x 1.6,
4	43128	AR	BOLT, Hex, M8 x 30, 8.8,
5	84077985	1	HANDRAIL, , FOR CL560 ONLY, EXTENSIONS 200MM
5	84447245	1	HANDRAIL, , EXTENSIONS 400MM
6	43139	AR	SCREW, {PP:80043139} M10x25
7	378244	AR	WASHER, M10,
8	140045	4	WASHER, SPRING, Belleville, M10,
9	100037	AR	NUT, M10 x 1.5, Cl 8,
10	84077653	1	EXTENSION, , EXTENSIONS 200MM
10	84077653	2	EXTENSION, , EXTENSIONS 400MM
11	84077977	1	HANDRAIL, , FOR CL560 ONLY, EXTENSIONS 200MM
11	84435910	1	HANDRAIL, , EXTENSIONS 400MM
12	86511315	5	WASHER, M8 x 16 x 1.6, , EXTENSIONS 200MM
13	43140	1	BOLT, Hex, M10 x 30, 8.8, Full Thd, , EXTENSIONS 200MM

10.225(01) REAR PANEL

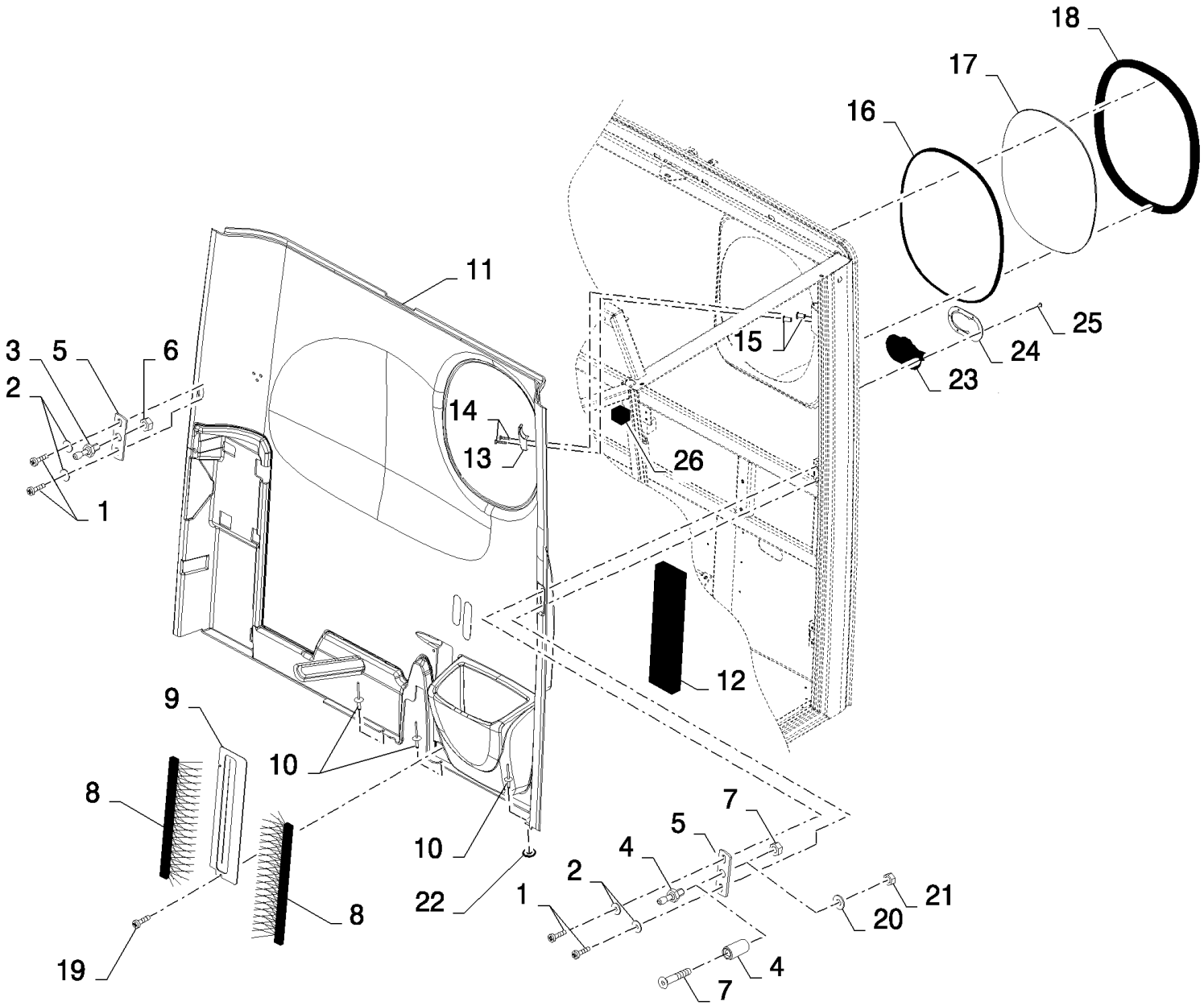

CS660 COMBINE BASE UNIT (1/03-) - Cab

10.225(01) REAR PANEL

ссылка	Номер детали	Кол-во	Описание
1	84007540	4	SCREW, M4x25
2	84007539	4	WASHER, 6MM
3	89992995	1	PIN, SPLIT (COTTER),
4	9594675	1	STOP, {PP:89594675} , BSN C363
4	84076428	1	STOP, , ASN D364
5	84431859	2	BRACKET,
6	100016	1	NUT, M10, Cl 8,
7	9818861	1	NUT, {PP:89818861} M12 x 1, Cl 8, M12, BSN C363
7	84320291	1	SCREW, Hex Soc Flat Hd, M8 x 45, 8.8, , ASN D364
8	84807784	2	BRUSH,
9	84807877	1	PLATE,
10	NS	3	NOT SERVICED, Rivet
11	84814586	1	SOFT TRIM,
12	84814200	1	STRIP, SEALING,
13	86520824	1	CLOTHING, HANGER,
14	86511824	2	SCREW, Cross Pan Hd, M4 x 20,
15	84814233	2	FASTENER,
16	401211	1	SEAL PROTECTION, {PP:80401211} L=1.65M
17	84400392	1	GLASS, CAB,
18	89819562	1	SEAL, L=1.65M
19	412491	1	SCREW, {PP:80412491} M6x16
20	322358	1	WASHER, SPRING, Belleville, M8,
21	89706690	1	NUT, M8, Cl 8,
22	9824326	3	WASHER, {PP:89824326} M5, 5MM
23	84442343	1	PLATE, FIXING,
24	84442338	1	SEAL PROTECTION,
25	NS	1	NOT SERVICED, RIVET
26	84790367	2	SOFT TRIM,

10.226(01) CAB FLOOR

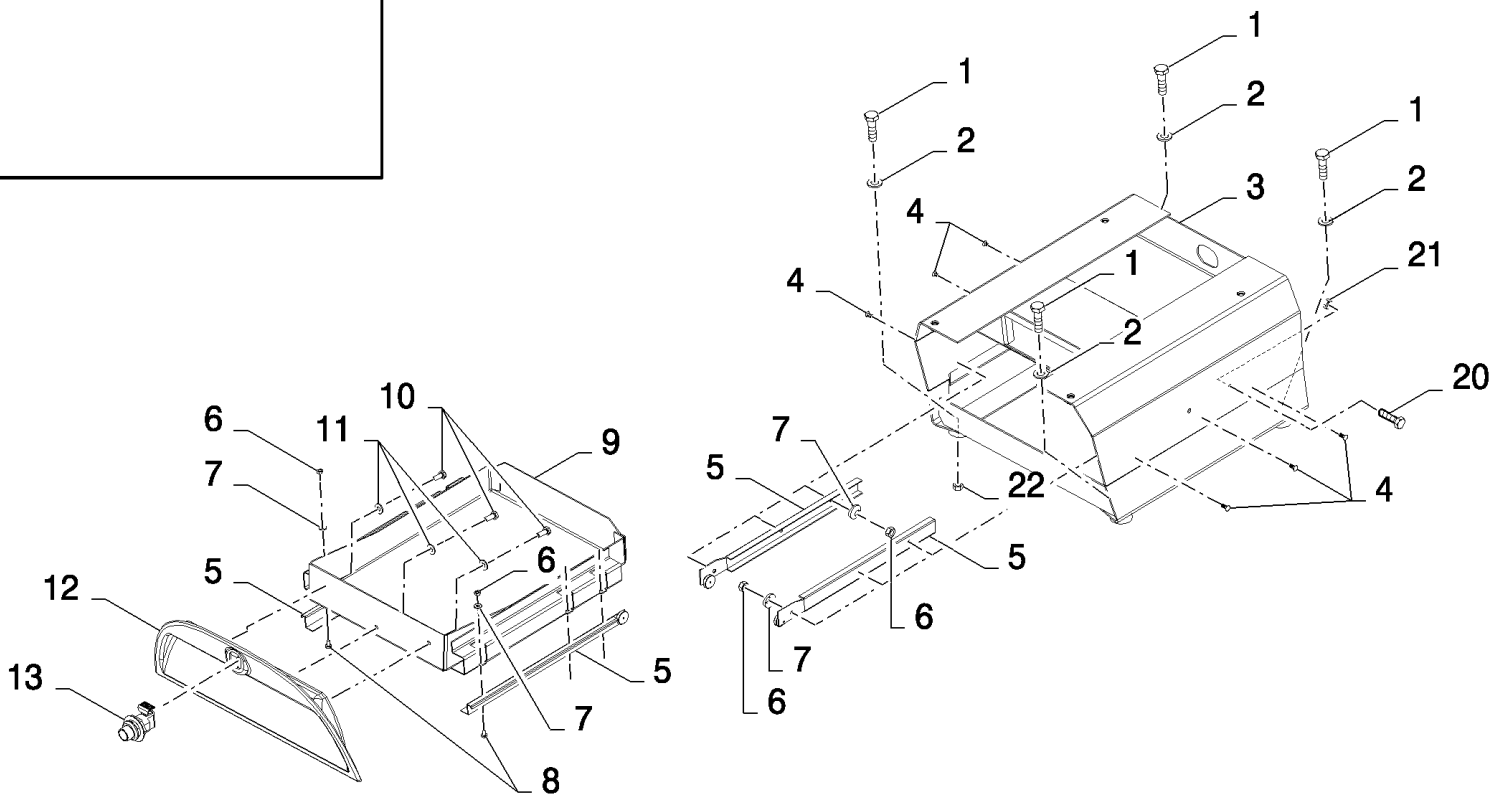

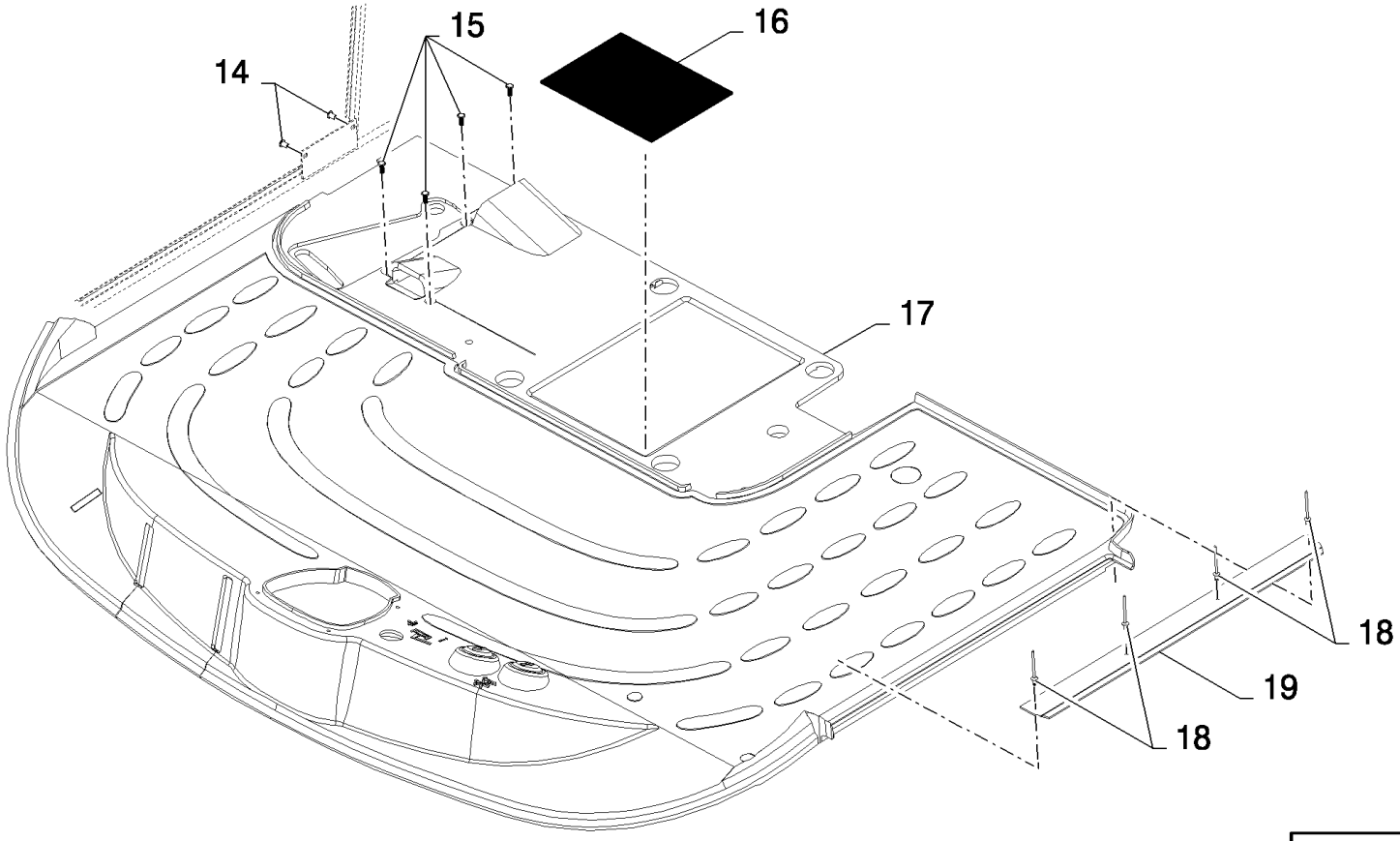

CS660 COMBINE BASE UNIT (1/03-) - Cab

10.226(01) CAB FLOOR

ссылка	Номер детали	Кол-во	Описание
1	9706704	4	BOLT, Hex, M10 x 35, 8.8, Full Thd, , BSN C363
1	120112	4	BOLT, Hex, M10 x 40, 8.8, Full Thd, , ASN D364
2	86511323	4	WASHER, M10 x 20 x 2,
3	84076752	1	SUPPORT, , BSN C487
3	87326672	1	SUPPORT, , ASN D488
4	385683	6	BOLT, Hex, M4 x 10, 8.8, Full Thd,
4	NS	6	NOT SERVICED, RIVET
5	84989345	1	RAIL ASSY., , BSN C487
6	100012	12	NUT, M4, Cl 8,
7	322355	12	WASHER, SPRING, Belleville, M4,
8	86511823	6	SCREW, Cross Pan Hd, M4 x 8, M4x8
8	NS	6	NOT SERVICED, RIVET
9	84076753	1	BOX, , BSN C487
9	87281323	1	HOLDER, , ASN D488
10	86508568	3	BOLT, Hex, M6 x 16, 8.8,
11	322357	3	WASHER, SPRING, Belleville, M6,
12	84320413	1	COVER, , BSN C487
13	84607095	1	LOCK, , BSN C487
14	84814233	2	FASTENER,
15	84607894	4	PLUG, , BSN C487
15	87343499	4	PIN, CLEVIS, , ASN D488
16	84432844	1	STRIP, SEALING, , BSN C487
17	84320416	1	MAT, FLOOR, , BSN C487
17	87357847	1	MAT, FLOOR, , ASN D488
18	NS	4	NOT SERVICED, Rivet
19	84001240	1	PLATE, COVER,
20	120101	2	BOLT, Hex, M6 x 30, 8.8, Full Thd,
21	15896221	2	NUT, M6, Cl 10, , BSN C487
22	353068	4	NUT, M6

CS660 COMBINE BASE UNIT (1/03-) - Cab

10.227(01) REAR PANEL, LOWER

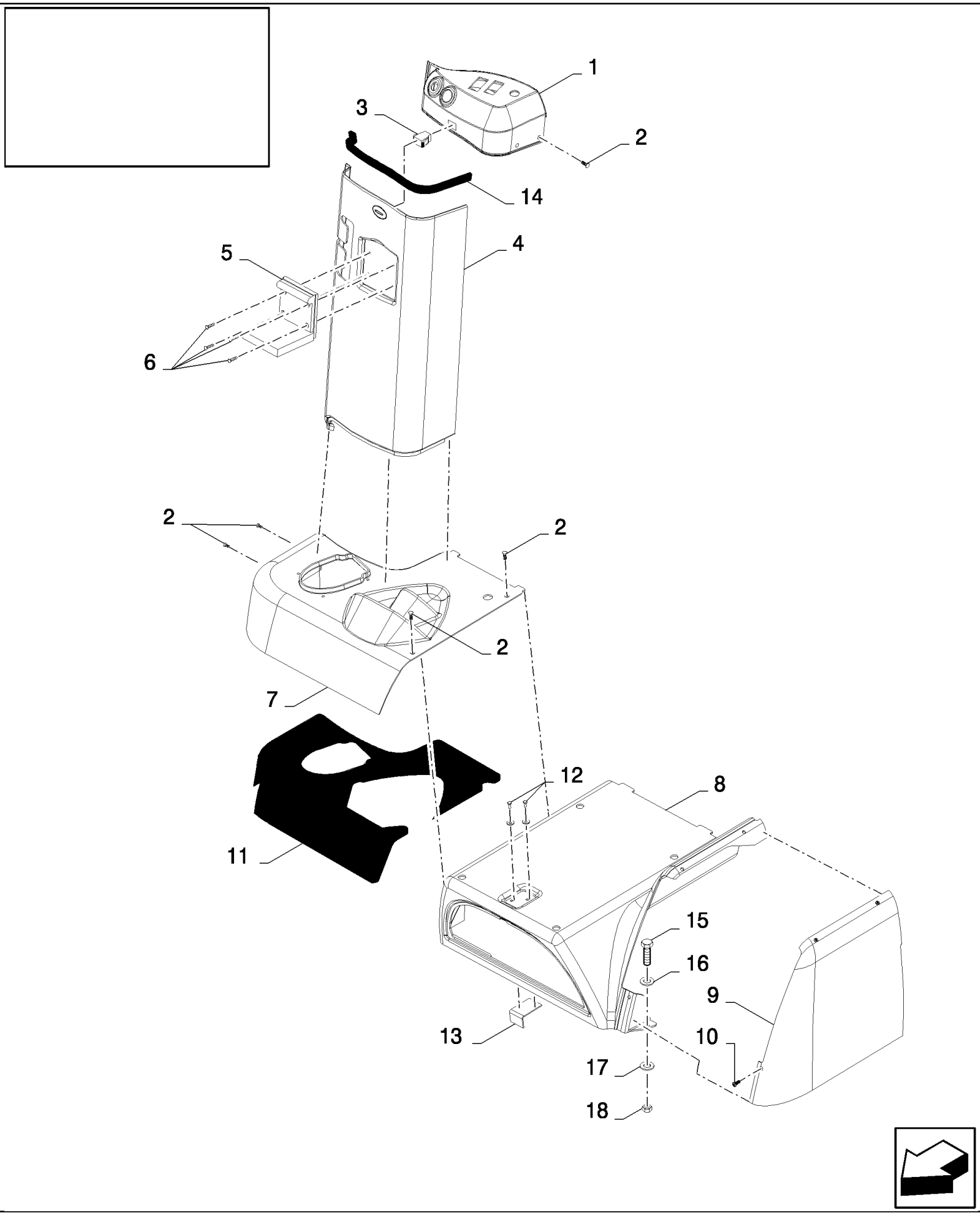

CS660 COMBINE BASE UNIT (1/03-) - Cab

10.227(01) REAR PANEL, LOWER

ссылка	Номер детали	Кол-во	Описание
1	84320411	1	COVER, , BSN C301
2	43645	AR	SCREW, Hex Flat Hd, M4 x 12, 4.8, M4x12, BSN C479
2	89844205	AR	SCREW, , ASN D480
3	84400156	1	FASTENER, , BSN C301
3	84607181	1	LOCK, , BSN F302487
4	84320410	1	CONSOLE,
5	9819041	1	CLAMP, {PP:89819041}
6	43646	4	SCREW, {PP:80043646} Hex Flat Hd, M4 x 20, 4.8, M4x20
7	84448078	1	CONSOLE, , BSN C487
7	87357904	1	CONSOLE, , ASN D488
8	84320412	1	CONSOLE, , BSN C487
8	87325608	1	CONSOLE, , ASN D488
9	84431120	1	CONSOLE,
10	9835804	4	SCREW, , BSN C487
11	84817294	1	SEAL,
12	385683	2	BOLT, Hex, M4 x 10, 8.8, Full Thd,
13	84444578	1	BRACKET, , BSN C487
14	80402295	AR	
15	412479	2	BOLT, Hex, M8 x 35, 8.8,
15	120104	1	BOLT, Hex, M8 x 20, 8.8,
16	86511315	2	WASHER, M8 x 16 x 1.6,
17	322358	1	WASHER, SPRING, Belleville, M8,
18	89706690	1	NUT, M8, Cl 8,

10.228(01) CAB FRAME

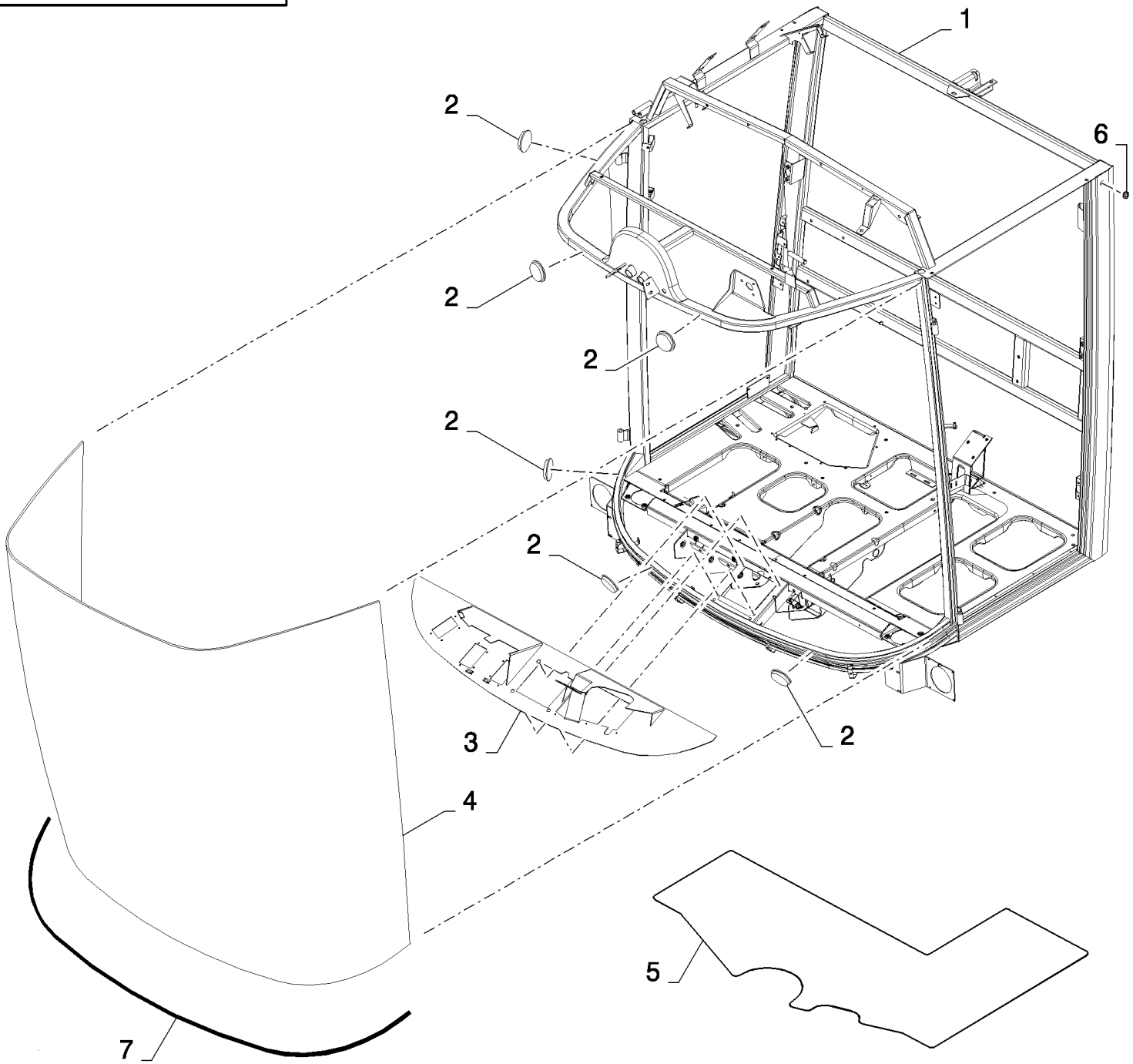

CS660 COMBINE BASE UNIT (1/03-) - Cab

10.228(01) CAB FRAME

ссылка	Номер детали	Кол-во	Описание
1	84989340	1	FRAME,
2	9992359	8	PLUG,
3	84435576	1	PLATE,
4	84400385	1	GLASS,
5	84448101	1	PROTECTION PLATE,
6	80433244	1	PLUG,
7	84460900	1	SEAL PROTECTION, , ASN D430

CS660 COMBINE BASE UNIT (1/03-) - Cab

10.229(01) CAB FRAME

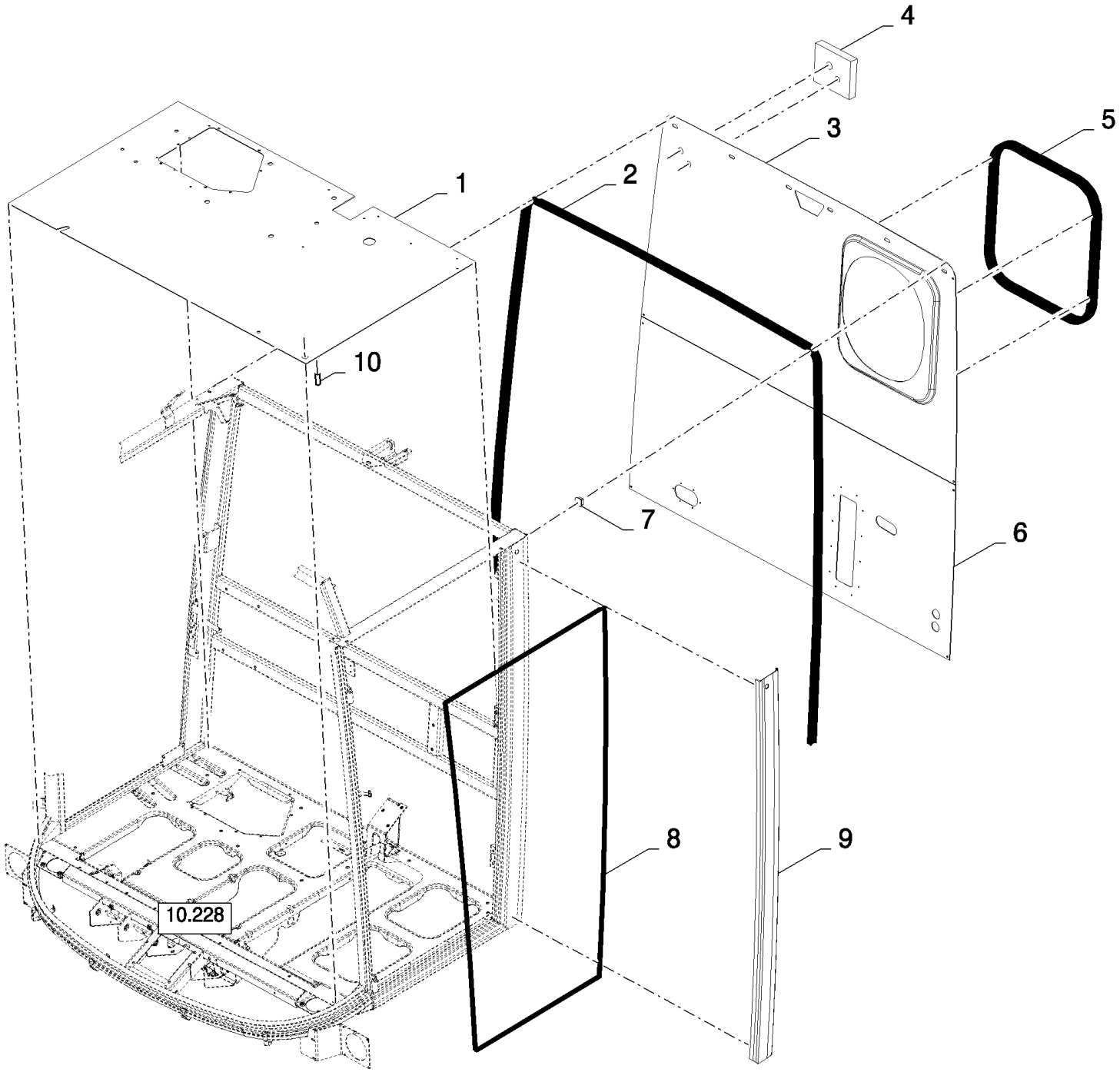

CS660 COMBINE BASE UNIT (1/03-) - Cab

10.229(01) CAB FRAME

ссылка	Номер детали	Кол-во	Описание
1	84433701	1	PLATE,
2	NS	1	NOT SERVICED, L=4.42M
3	84443491	1	PLATE,
4	84814573	1	SOFT TRIM,
5	NS	1	NOT SERVICED, L=2M
6	84443490	1	PLATE,
7	9818501	24	PLUG, {PP:89818501} Sq, Plastic,
8	NS	1	NOT SERVICED, L=8.6M
9	NS	1	NOT SERVICED,
10	87282347	1	INSERT, THREADED,

10.230(01) CAB FRAME

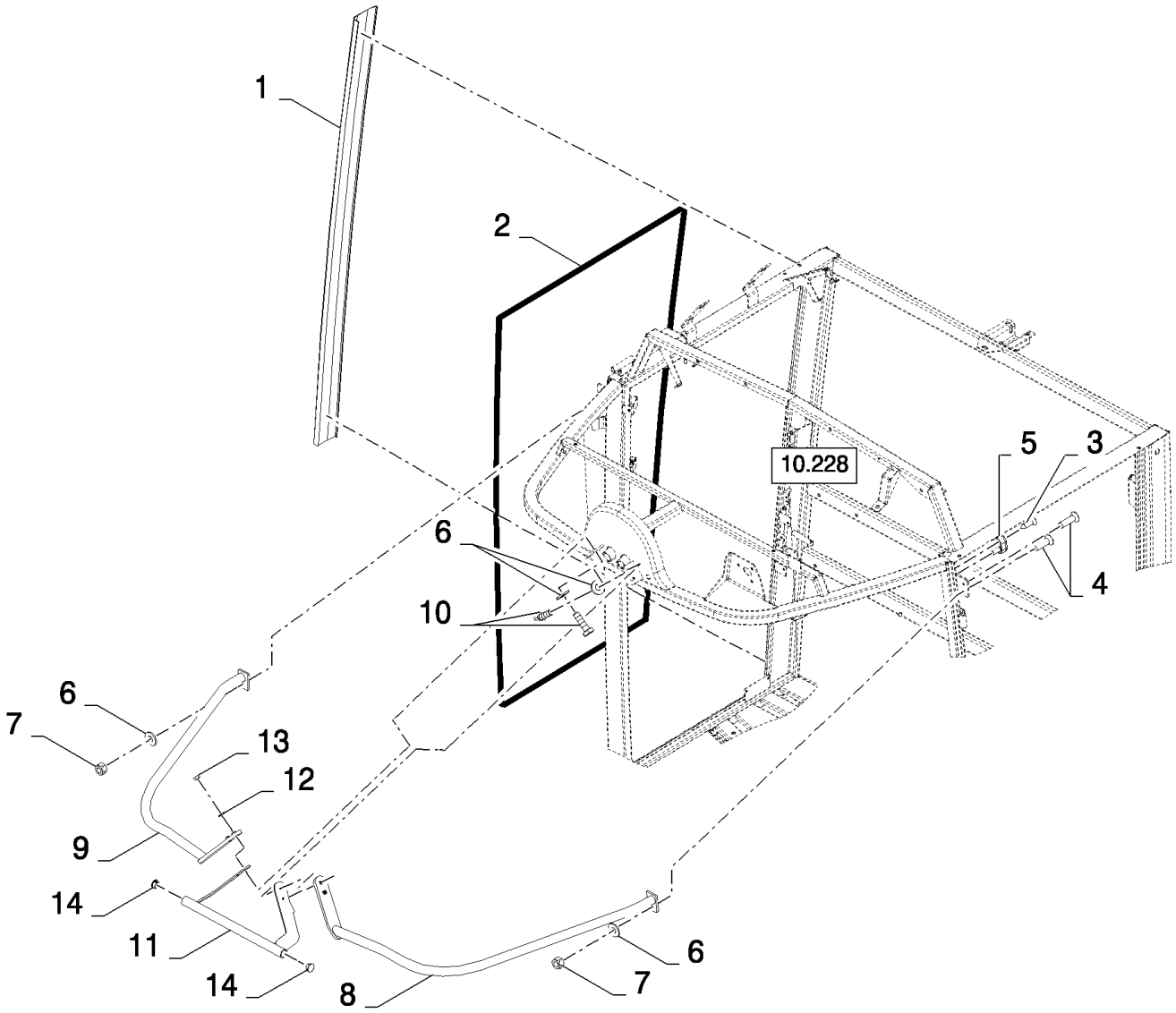

CS660 COMBINE BASE UNIT (1/03-) - Cab

10.230(01) CAB FRAME

ссылка	Номер детали	Кол-во	Описание
1	NS	1	NOT SERVICED,
2	NS	1	NOT SERVICED,
3	9835804	1	SCREW, {PP:89835804}
4	43653	4	SCREW, Hex Flat Hd, M6 x 20, 4.8, M6x20, BSN C479
5	89990447	1	SWITCH,
6	322357	6	WASHER, SPRING, Belleville, M6, , BSN C479
7	353308	2	NUT, LOCK, M6 x 1, Cl 8, , BSN C479
8	84442307	1	HANDRAIL, , BSN C479
9	84442309	1	HANDRAIL, , BSN C479
10	120100	4	BOLT, Hex, M6 x 20, 8.8,
11	87315421	1	SUPPORT, , ASN D480
12	89824259	1	WASHER, , ASN D480
13	89706755	1	NUT, , ASN D480
14	84989341	1	PLUG, , ASN D480

10.231(01) RAIL WITHOUT EXTENSION

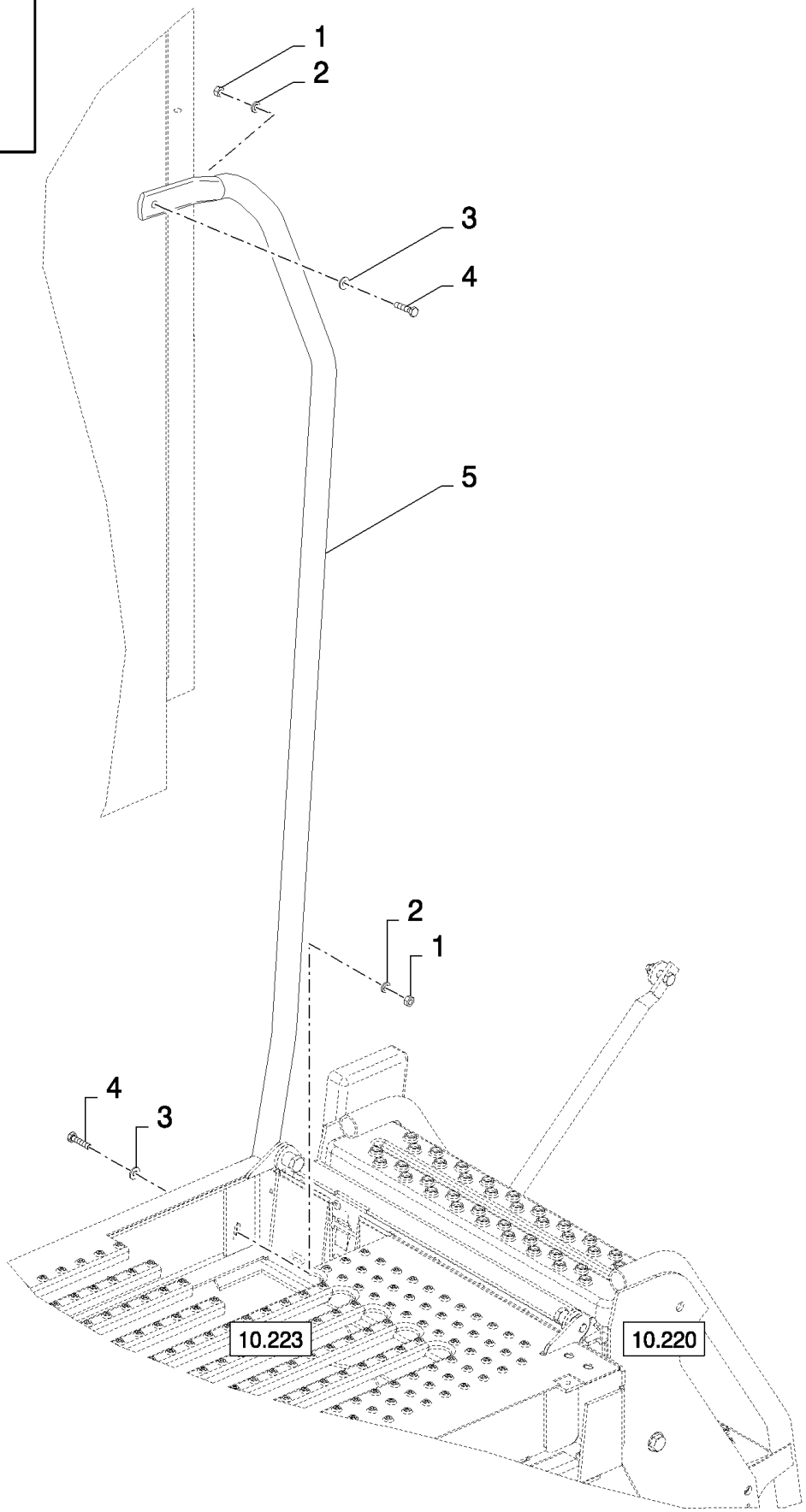

CS660 COMBINE BASE UNIT (1/03-) - Cab

10.231(01) RAIL WITHOUT EXTENSION

ссылка	Номер детали	Кол-во	Описание
1	15896221	2	NUT, M6, Cl 10,
2	86588499	2	WASHER, M6 x 12 x 1.6, 6MM
3	322357	2	WASHER, SPRING, Belleville, M6,
4	86977786	2	BOLT, Hex, M6 x 25, 8.8,
5	84444204	1	TUBE,

10.232(01) DOOR, RH

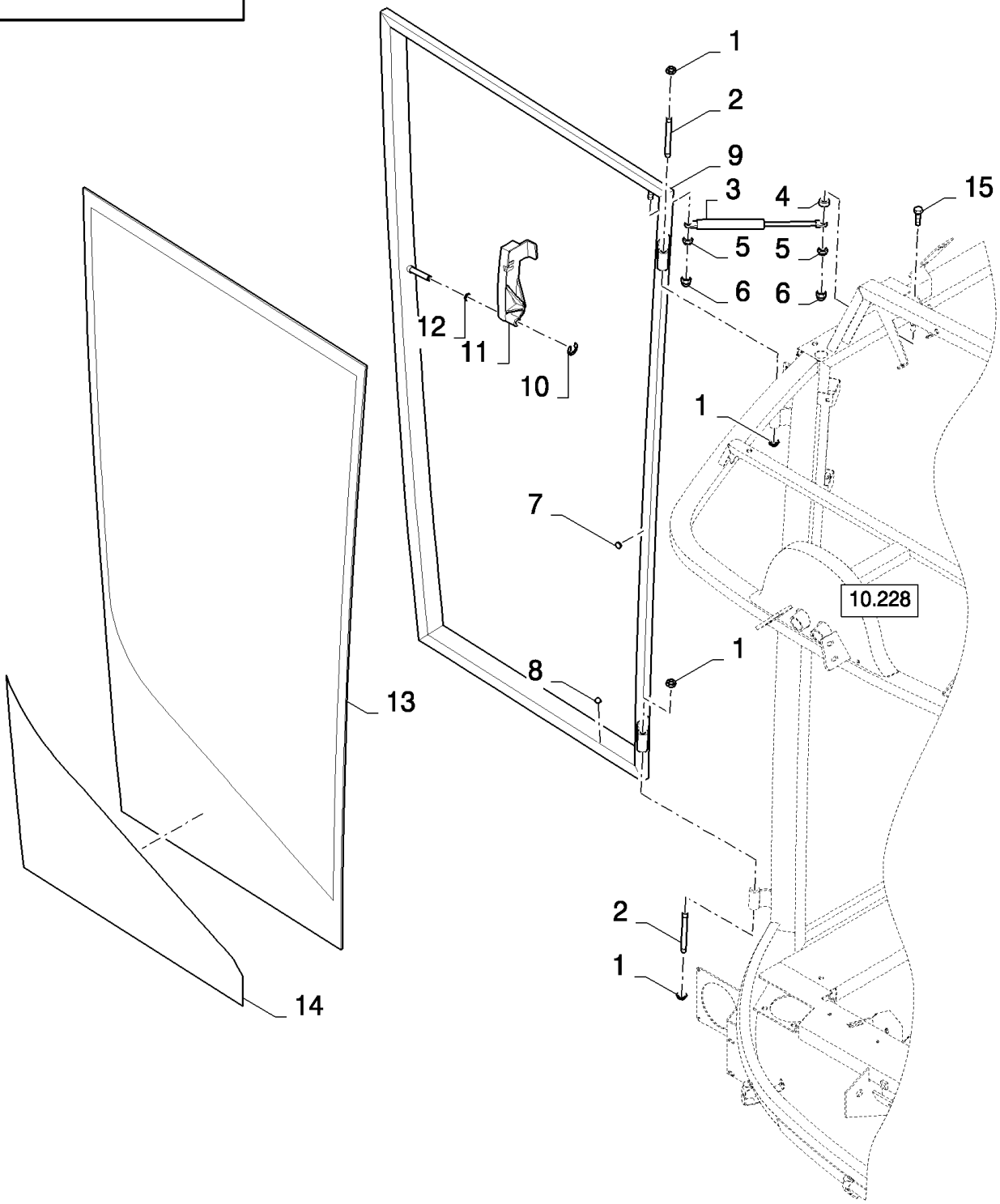

CS660 COMBINE BASE UNIT (1/03-) - Cab

10.232(01) DOOR, RH

ссылка	Номер детали	Кол-во	Описание
1	431021	4	WASHER, SPECIAL, {PP:80431021}
2	84607358	2	PIN,
3	89594808	1	GAS STRUT,
4	350240	1	WASHER, {PP:80350240} 9MM
5	86629542	2	NUT, LOCK, M8 x 1.25, Cl 8,
6	458639	2	CAP, {PP:80458639} Nut, M8,
7	9992358	8	ELASTIC STOP, {PP:89992358} 3.5MM
8	9818501	2	PLUG, {PP:89818501} Sq, Plastic, 4.8MM
9	84073224	1	DOOR,
10	89992582	1	CIRCLIP,
11	89992366	1	HANDLE,
12	89992578	1	O-RING,
13	740854	1	GLASS, CAB, {PP:80740854}
14	84429737	1	DECAL,
15	9812123	1	BUSHING, {PP:89812123}

10.233(01) DOOR, LH

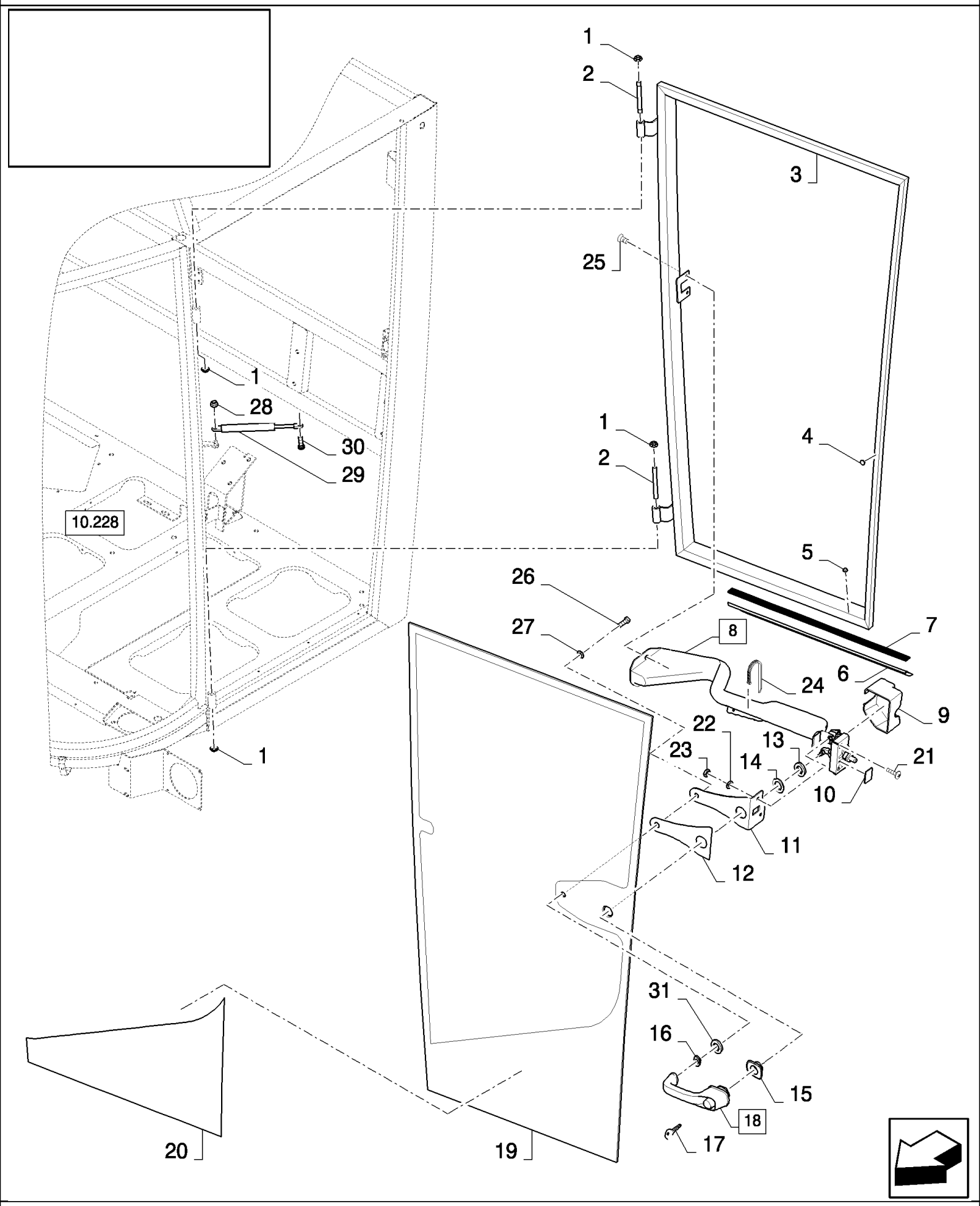

CS660 COMBINE BASE UNIT (1/03-) - Cab

10.233(01) DOOR, LH

ссылка	Номер детали	Кол-во	Описание
1	431021	4	WASHER, SPECIAL, {PP:80431021}
2	84607358	2	PIN,
3	84073228	1	DOOR,
4	9992358	8	ELASTIC STOP, {PP:89992358} 3.5MM
5	9818501	2	PLUG, {PP:89818501} Sq, Plastic, 4.8MM
6	84807851	1	PLATE,
7	NS	2	NOT SERVICED, L=1.4M
8	84989910	1	HANDLE, (9,10)
9	NSS	1	NOT SERVICED SEPARATELY,
10	NSS	1	NOT SERVICED SEPARATELY,
11	84819764	1	PLATE,
12	84819765	1	SEAL, RUBBER,
13	NSS	1	NOT SERVICED SEPARATELY,
14	NSS	1	NOT SERVICED SEPARATELY,
15	9513968	1	GASKET, {PP:89513968}
16	9513969	1	GASKET, {PP:89513969}
17	84032451	1	KEY, DOOR LOCK,
18	9513970	1	HANDLE, {PP:89513970} (13,14,17)
19	84431878	1	GLASS, , BSN C363
19	84819792	1	GLASS, , ASN D364
20	84429738	1	DECAL,
21	300351	2	SCREW, {PP:80300351} Hex Flat Hd, M8 x 30, 4.8, M8x30
21	300352	2	SCREW, Hex Flat Hd, M8 x 40, 4.8,
22	84007539	2	WASHER, 6MM, BSN C479
22	322358	2	WASHER, SPRING, Belleville, M8, , ASN D480
23	89706690	2	NUT, M8, Cl 8,
24	747159	1	CLAMP,
25	86511828	2	SCREW, Cross Pan Hd, M6 x 12,
26	NS	2	NOT SERVICED,
26	43117	1	BOLT, Hex, M6 x 30, 8.8,
27	NS	2	NOT SERVICED,
27	322357	1	WASHER, SPRING, Belleville, M6,
28	353308	1	NUT, LOCK, M6 x 1, Cl 8,
29	84989908	1	SHOCK ABSORBER, , BSN C363
29	89594808	1	GAS STRUT, , ASN D364
30	86511829	1	SCREW, Cross Pan Hd, M6 x 16,
31	264036	1	BUSHING,

10.234(01) SCREEN WASHER FOR FRONT WINDOW

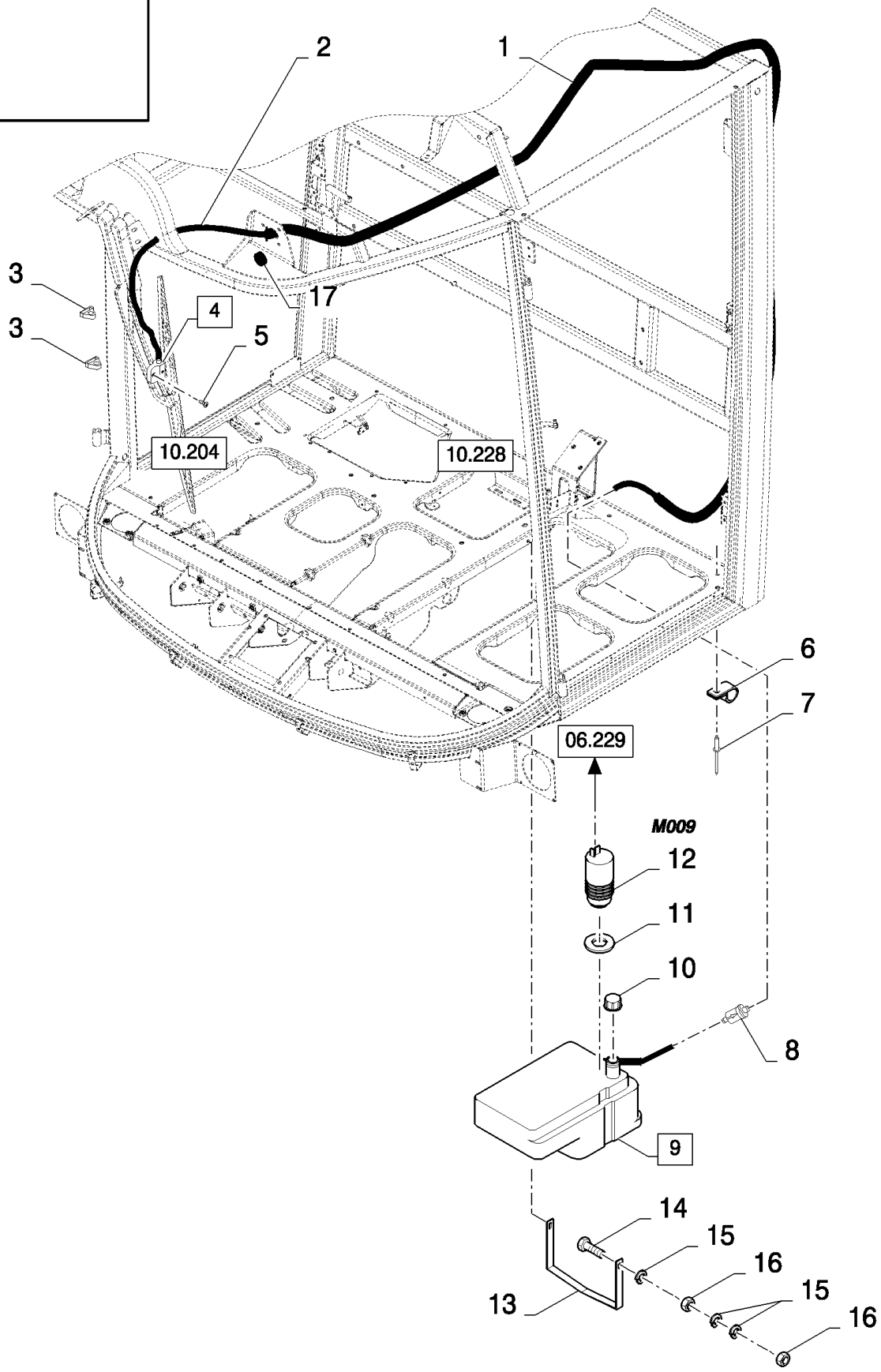

CS660 COMBINE BASE UNIT (1/03-) - Cab

10.234(01) SCREEN WASHER FOR FRONT WINDOW

ссылка	Номер детали	Кол-во	Описание
1	NS	AR	NOT SERVICED, L=3.3M
2	84037518	AR	HOSE, L=6M
3	84442498	4	CLIP,
4	84442497	1	NOZZLE, (5)
5	NSS	1	NOT SERVICED SEPARATELY,
6	9503930	2	CLAMP, {PP:89503930}
6	84818443	2	CLAMP, , FOR CL560 ONLY
7	NS	2	NOT SERVICED, Rivet
8	84037530	1	VALVE, CHECK,
9	84002498	1	RESERVOIR, WINDSH. WASH, (10 to 12)
10	84041004	1	CAP,
11	84037531	1	SEAL,
12	84037533	1	PUMP,
13	84002499	1	CLAMP,
14	86977786	2	BOLT, Hex, M6 x 25, 8.8,
15	322357	6	WASHER, SPRING, Belleville, M6,
16	15896221	4	NUT, M6, Cl 10,
17	46288	1	GROMMET, {PP:80046288}

10.235(01) AIR CONDITIONER

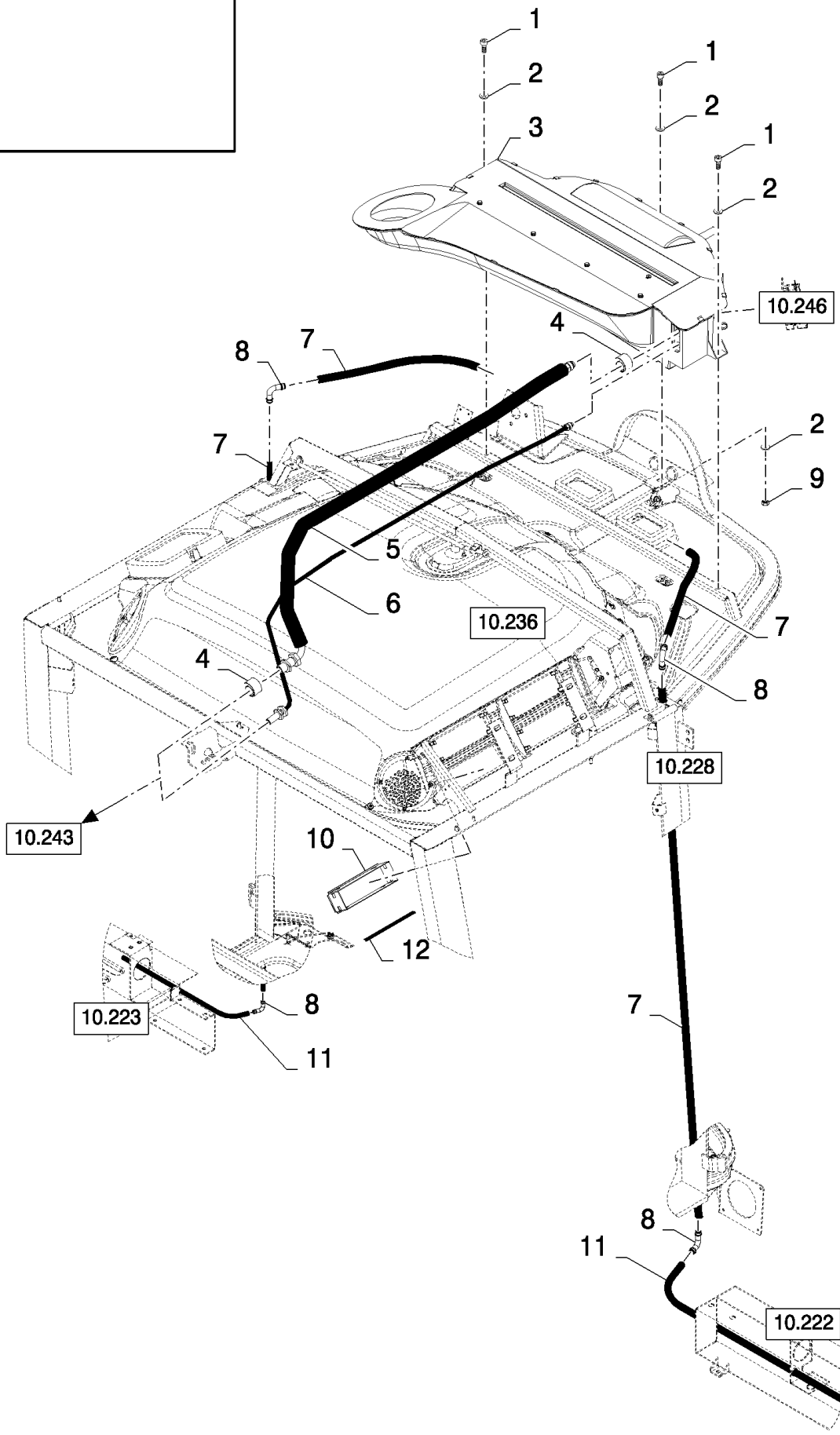

CS660 COMBINE BASE UNIT (1/03-) - Cab

10.235(01) AIR CONDITIONER

ссылка	Номер детали	Кол-во	Описание
1	86512138	3	SCREW, Hex Soc Hd, M8 x 20, 12.9,
1	84012852	3	SCREW, Hex Soc Hd, M8 x 16, 8.8, M8x16
2	86511315	4	WASHER, M8 x 16 x 1.6,
3	84100128	1	AIR CONDITIONER,
4		2	L=0.5M
5	84320643	1	TUBE,
6	84320642	1	TUBE,
7	84814472	2	HOSE, FLEXIBLE, L=4.015M
8	9513786	4	ELBOW, {PP:89513786}
9	89706690	1	NUT, M8, Cl 8,
10	84334445	1	SLEEVE, , BSN C491
10	87371969	1	SLEEVE, , ASN D492
11	84814601	2	DUCT, , BSN C515
11	84814472	1	HOSE, FLEXIBLE, , ASN D516
12	80400987	1	SEAL, L=0.35M

10.236(01) CAB ROOF, INNER

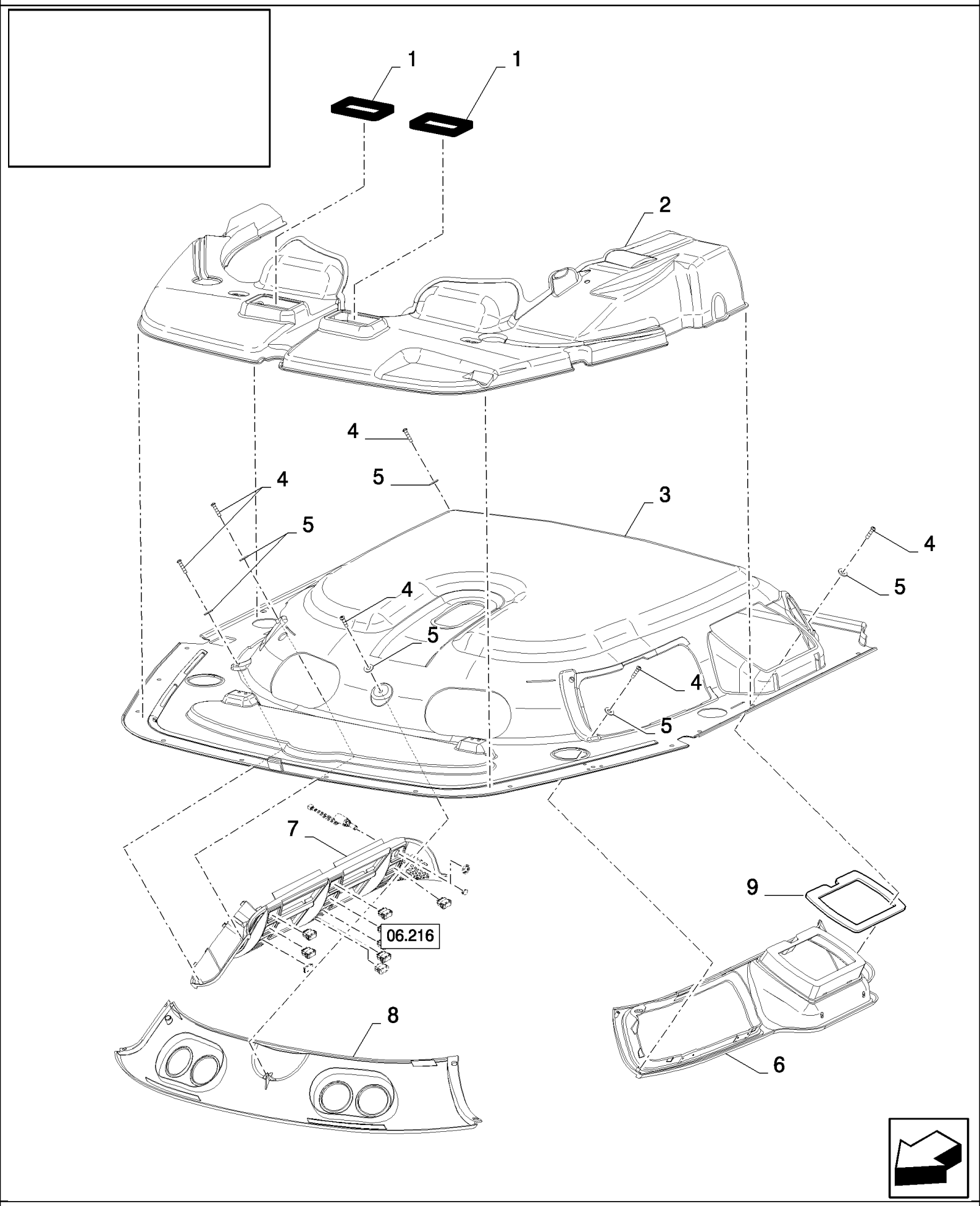

CS660 COMBINE BASE UNIT (1/03-) - Cab

10.236(01) CAB ROOF, INNER

ссылка	Номер детали	Кол-во	Описание
1	84817296	2	SEAL,
2	84814239	1	SOFT TRIM,
3	84814238	1	SOFT TRIM,
4	9514970	7	SCREW, {PP:89514970}
5	80707	7	WASHER, 3/16",
6	84320404	1	SOFT TRIM, LH, BSN C375
6	84454642	1	SOFT TRIM, , ASN D376
7	84320406	1	SOFT TRIM, RH, BSN C375
7	84454643	1	SOFT TRIM, , ASN D376
8	84320405	1	SOFT TRIM,
9	NS	1	NOT SERVICED,

10.237(01) CAB ROOF, INNER

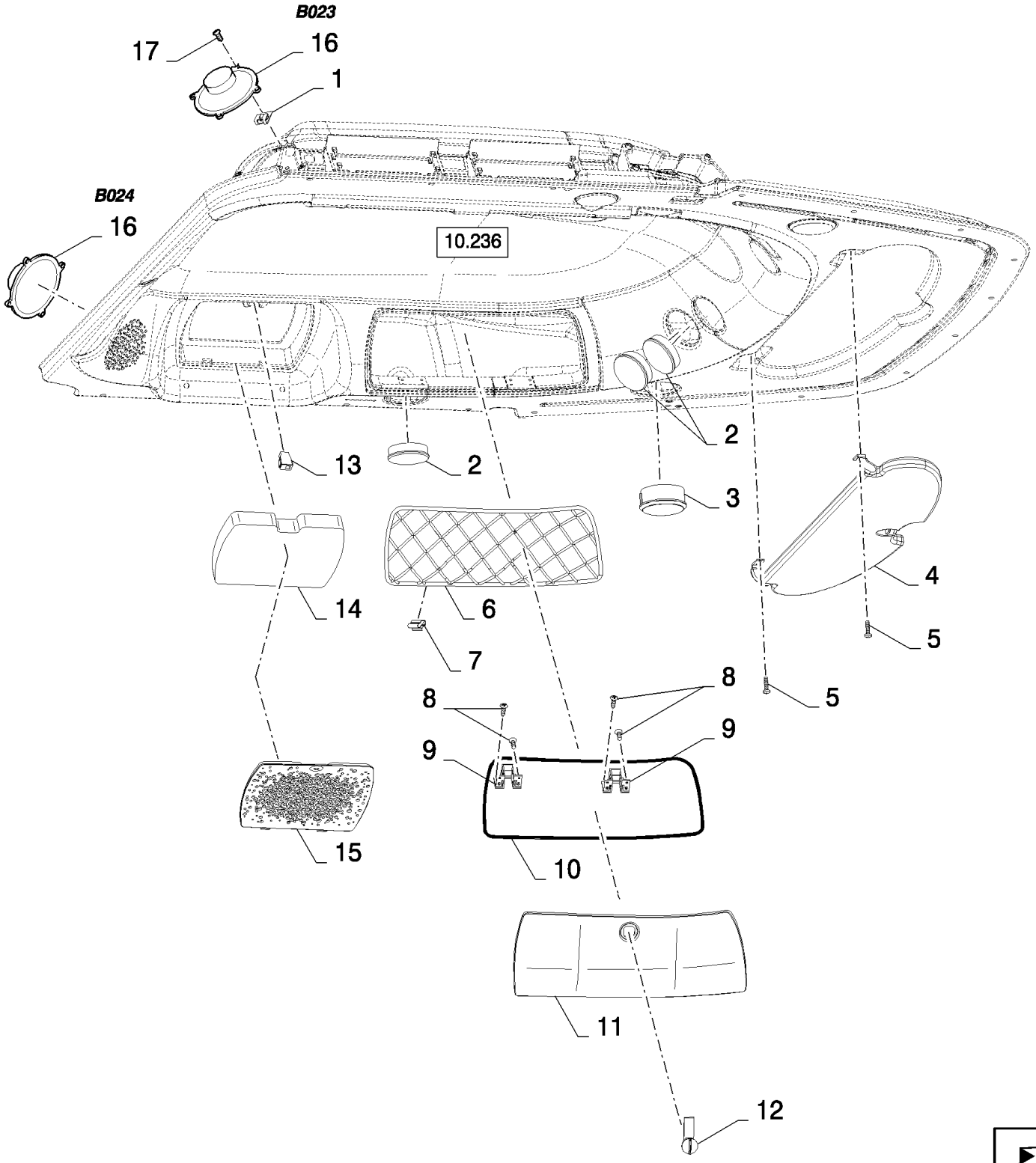

CS660 COMBINE BASE UNIT (1/03-) - Cab

10.237(01) CAB ROOF, INNER

ссылка	Номер детали	Кол-во	Описание
1	84005699	8	CLIP,
2	84100244	3	DUCT, AIR,
3	84400419	1	DUCT, AIR,
4	84320403	1	SUN VISOR,
5	86511042	4	SCREW, Cross Pan Hd, M4 x 16,
6	84607154	1	MESH,
7	84807656	8	CLIP,
8	9835804	16	SCREW, {PP:89835804}
9	84607018	2	HINGE,
10	84814236	1	SEAL,
11	84320408	1	COVER,
12	84607181	1	LOCK,
13	84400156	1	FASTENER,
14	84607214	1	FILTER, CAB,
15	84431119	1	GRILLE,
16	82014952	2	SPEAKER,
17	9514970	8	SCREW, {PP:89514970}

10.238(01) CAB ROOF, INNER

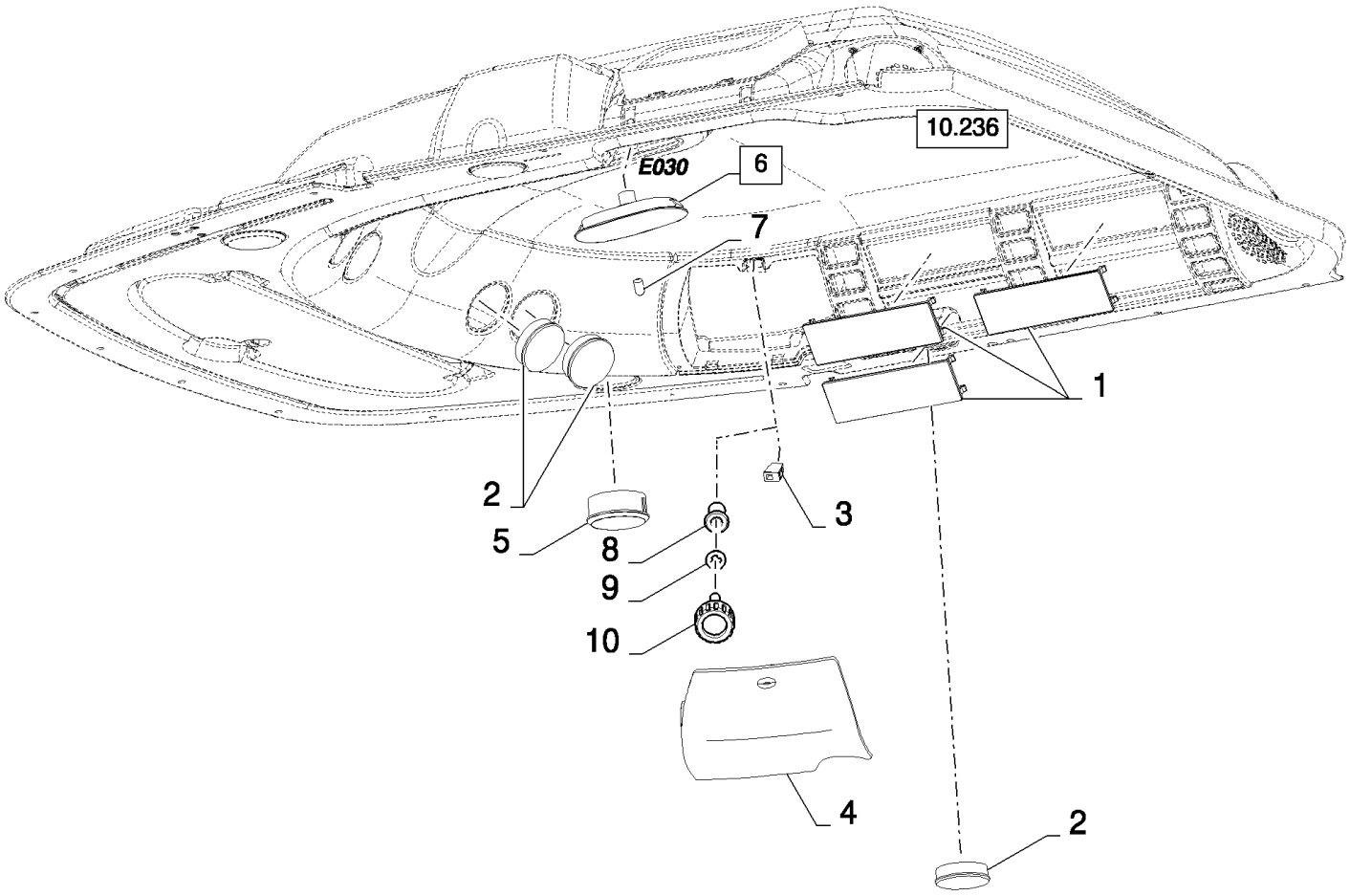

CS660 COMBINE BASE UNIT (1/03-) - Cab

10.238(01) CAB ROOF, INNER

ссылка	Номер детали	Кол-во	Описание
1	81868985	3	PLATE,
2	84100244	3	DUCT, AIR,
3	84400156	1	FASTENER, , BSN C375
4	84320407	1	COVER, , BSN C375
4	84454665	1	COVER, , ASN D376
5	84400419	1	DUCT, AIR,
6	84057991	1	LAMP, CEILING, (7)
7	86616249	1	BULB,
8	84814233	1	FASTENER, , ASN D376
9	84454615	1	RING, , ASN D376
10	84454616	1	KNOB, , ASN D376

10.239(01) CAB ROOF, OUTER

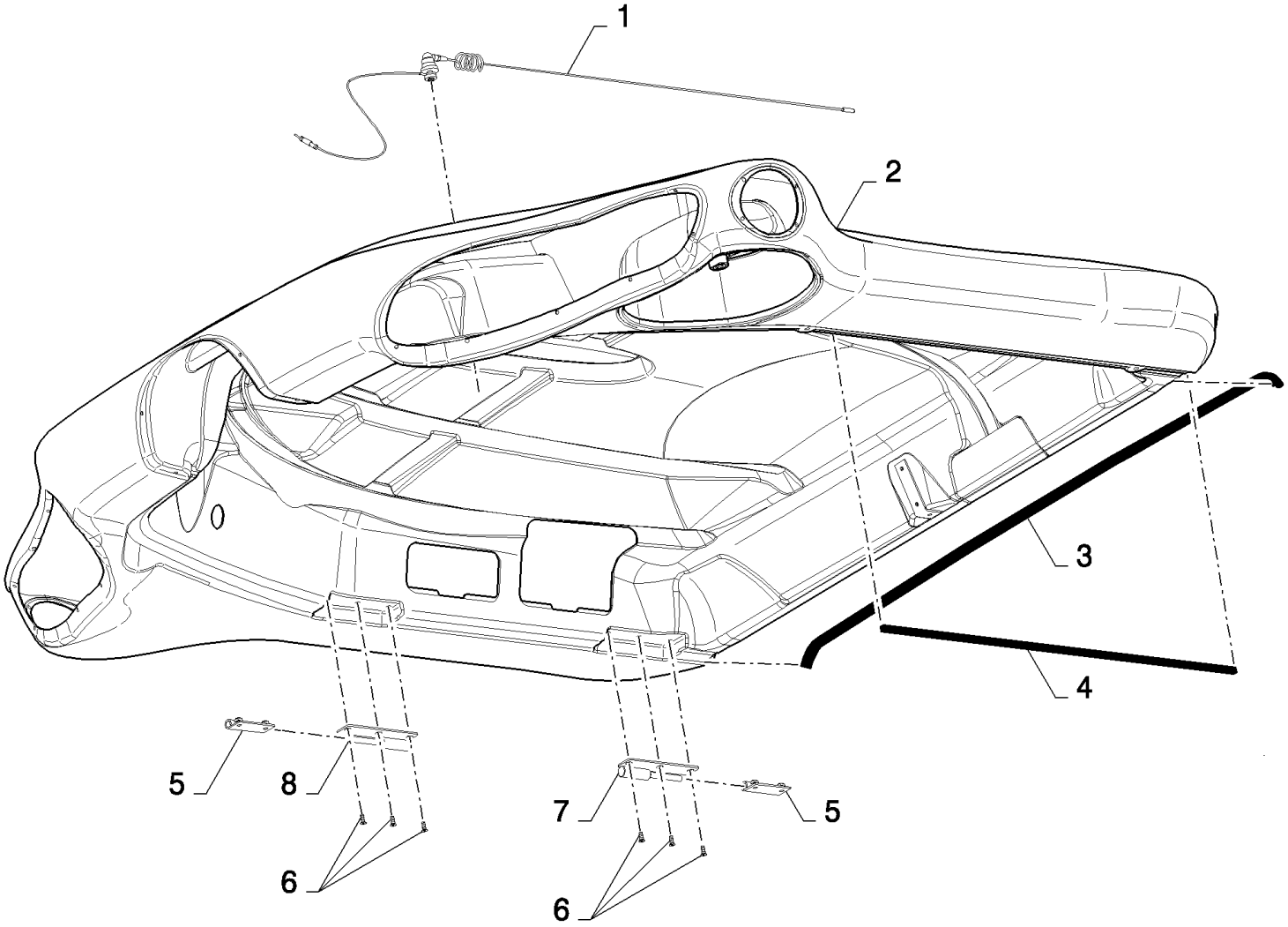

CS660 COMBINE BASE UNIT (1/03-) - Cab

10.239(01) CAB ROOF, OUTER

ссылка	Номер детали	Кол-во	Описание
1	84026763	1	ANTENNA,
2	84814286	1	ROOF,
3	84607251	1	WEATHERSTRIP, RUBBER, L:1.42M
4	86534853	1	STRIP-GASKET, L:0.8M
5	84075984	2	HINGE,
6	300580	6	SCREW, {PP:80300580} Hex Flat Hd, M6 x 16, 4.8, M6x16
7	84075994	1	HINGE,
8	84075990	1	HINGE,

10.240(01) CAB ROOF

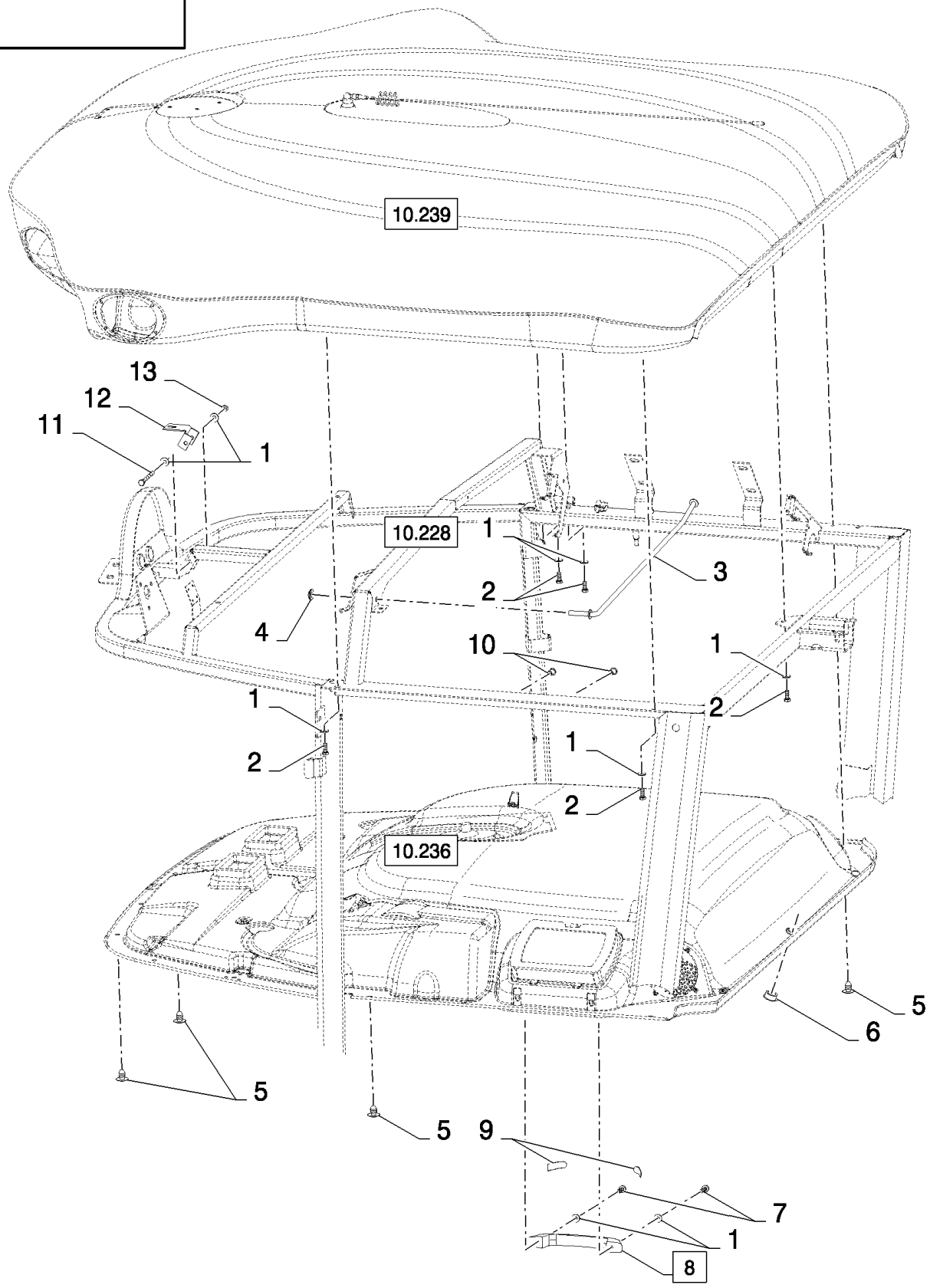

CS660 COMBINE BASE UNIT (1/03-) - Cab

10.240(01) CAB ROOF

ссылка	Номер детали	Кол-во	Описание
1	322357	11	WASHER, SPRING, Belleville, M6,
2	86508568	7	BOLT, Hex, M6 x 16, 8.8,
3	84814199	1	ARM, SUPPORTING,
4	431021	1	WASHER, SPECIAL, {PP:80431021}
5	84000834	16	PLUG,
6	84989341	1	PLUG,
7	86511831	2	SCREW, Cross Pan Hd, M6 x 25, M6x25
8	9500185	1	HANDLE GRIP, {PP:89500185} (9)
9	NSS	2	NOT SERVICED SEPARATELY,
10	9833239	2	NUT, {PP:89833239} M6
11	338413	1	BOLT, Hex, M6 x 60, 8.8,
12	84989197	1	SUPPORT,
13	15896221	1	NUT, M6, Cl 10,

10.241(01) CAB ROOF LIGHTS, LH

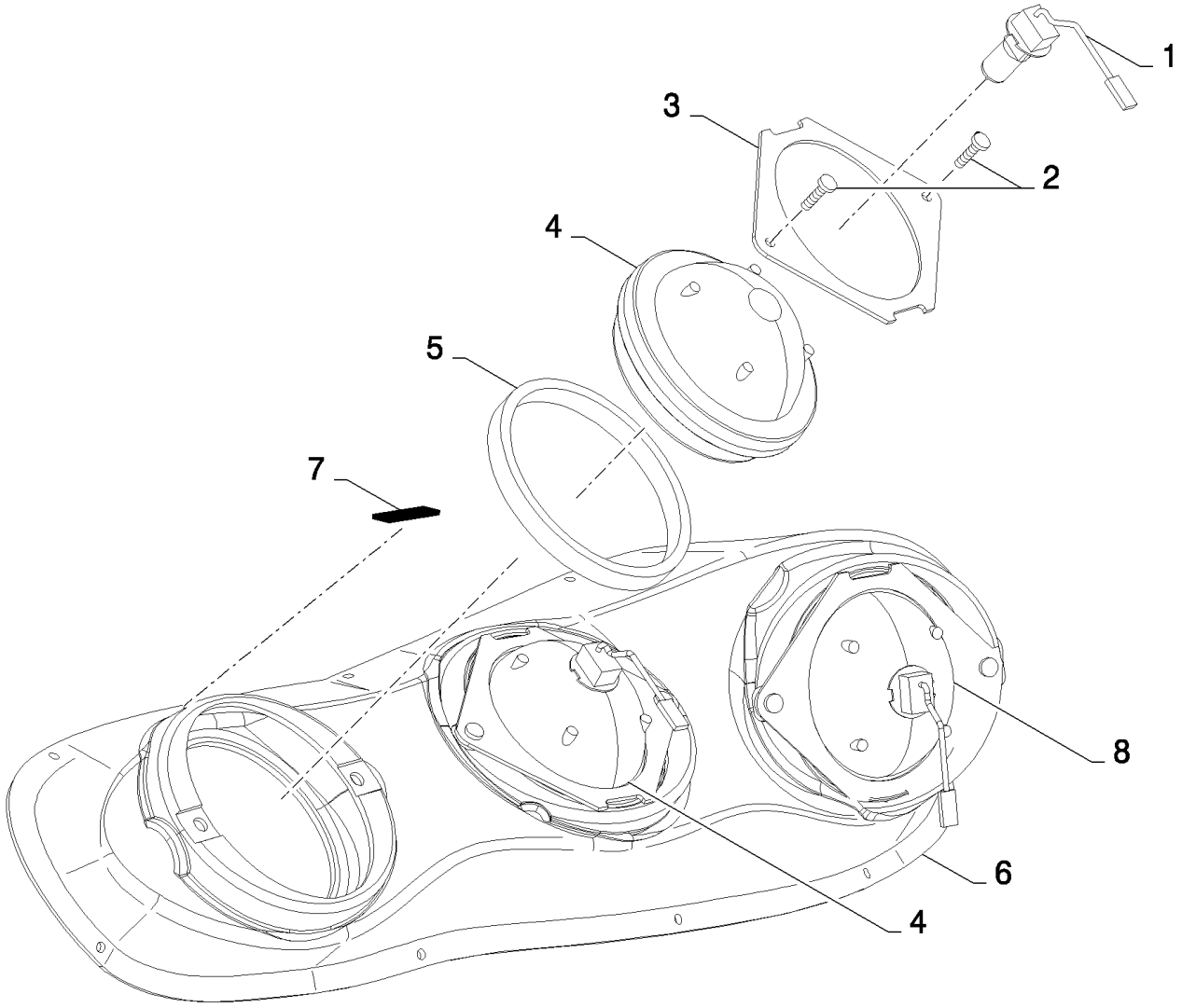

CS660 COMBINE BASE UNIT (1/03-) - Cab

10.241(01) CAB ROOF LIGHTS, LH

ссылка	Номер детали	Кол-во	Описание
1	417720	3	BULB, {PP:80417720}
2	86511042	6	SCREW, Cross Pan Hd, M4 x 16,
3	84431845	3	PLATE,
4	84320764	2	LAMP,
5	84814420	3	SEAL,
6	84320392	1	BEZEL,
7	NS	1	NOT SERVICED, L=1.5M
8	84320763	1	LAMP,

10.242(01) CAB ROOF LIGHTS, RH

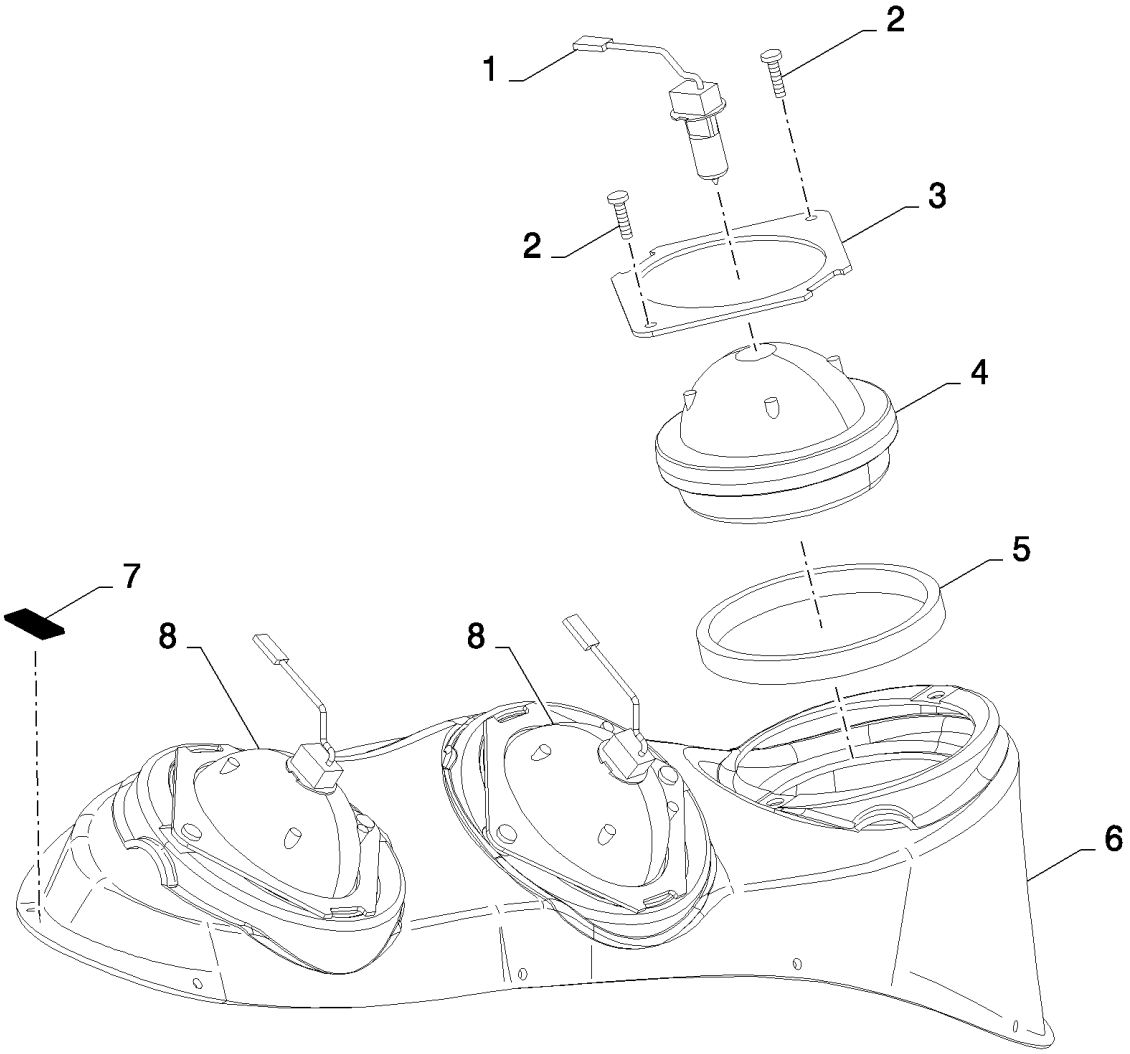

CS660 COMBINE BASE UNIT (1/03-) - Cab

10.242(01) CAB ROOF LIGHTS, RH

ссылка	Номер детали	Кол-во	Описание
1	417720	3	BULB, {PP:80417720}
2	86511042	6	SCREW, Cross Pan Hd, M4 x 16,
3	84431845	3	PLATE,
4	84320763	1	LAMP,
5	84814420	3	SEAL,
6	84320396	1	BEZEL,
7	NS	1	NOT SERVICED, L=1.5M
8	84320764	2	LAMP,

10.243(01) AIR CONDITIONER UNIT : MOUNTING GROUP

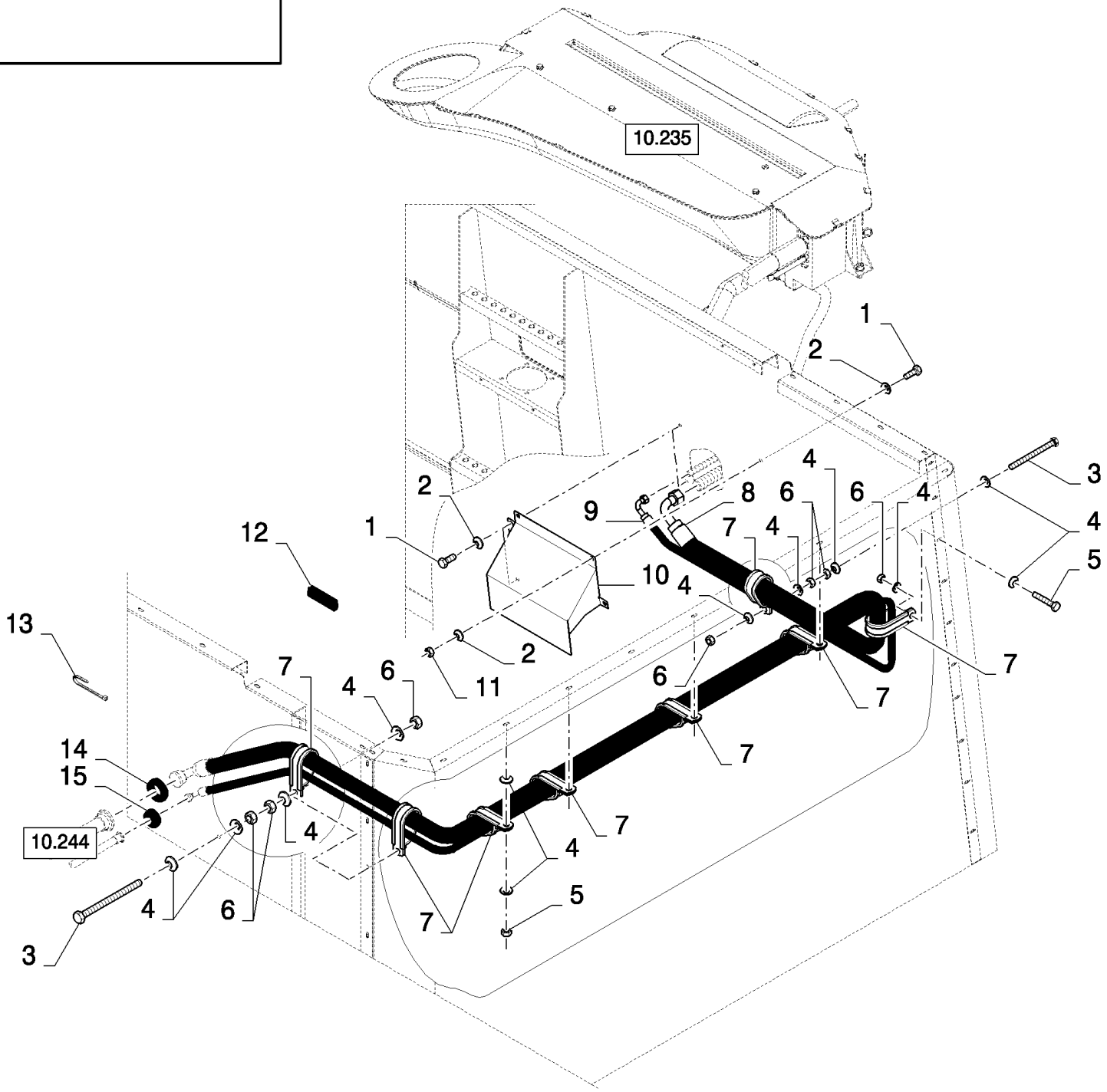

CS660 COMBINE BASE UNIT (1/03-) - Cab

10.243(01) AIR CONDITIONER UNIT : MOUNTING GROUP

ссылка	Номер детали	Кол-во	Описание
1	16043224	3	BOLT, Hex, M8 x 16, 8.8, Full Thd,
2	322358	4	WASHER, SPRING, Belleville, M8,
3	86508569	3	BOLT, Hex, M6 x 70, 8.8, M6x70
4	322357	22	WASHER, SPRING, Belleville, M6,
5	43118	1	BOLT, Hex, M6 x 40, 8.8,
6	15896221	14	NUT, M6, Cl 10,
7	9513271	8	CLAMP, {PP:89513271}
8	84320644	1	HOSE, FLEXIBLE,
9	84320641	1	HOSE, FLEXIBLE,
10	84439794	1	PLATE, COVER,
11	89706690	1	NUT, M8, Cl 8,
12	80401270	1	PROFILE, L=0.1M
13	89994404	4	CLIP, HOSE,
14	129959	1	GROMMET, {PP:80129959}
15	84011186	1	RING, RUBBER,

10.244(01) AIR CONDITIONER UNIT : COMPRESSOR, DRYER

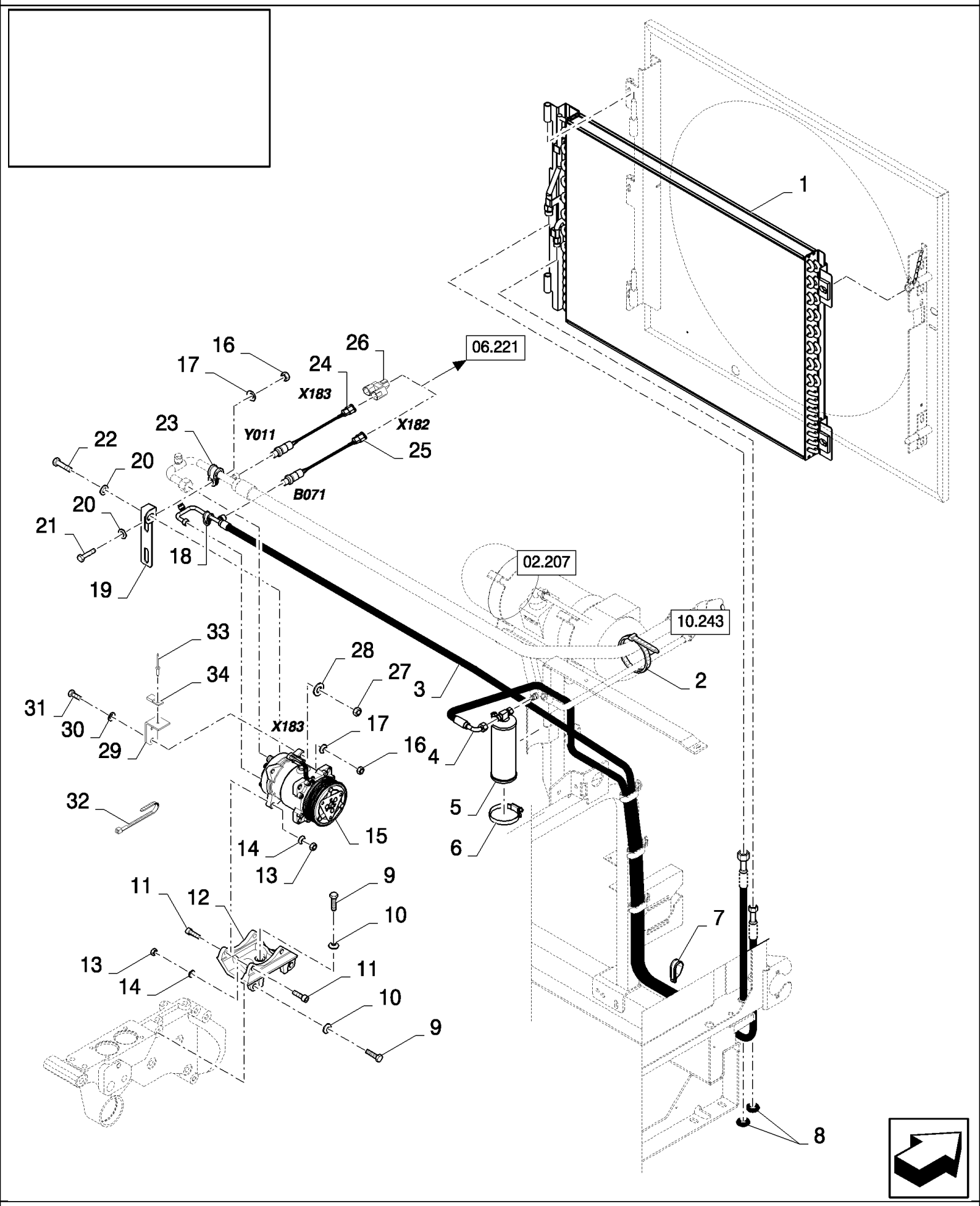

CS660 COMBINE BASE UNIT (1/03-) - Cab

10.244(01) AIR CONDITIONER UNIT : COMPRESSOR, DRYER

ссылка	Номер детали	Кол-во	Описание
1	84069854	1	CONDENSER,
2	89994404	2	CLIP, HOSE,
3	84320639	1	HOSE, FLEXIBLE,
4	84320640	1	HOSE, FLEXIBLE,
5	84058791	1	RECEIVER-DRYER,
5	84078487	1	RECEIVER-DRYER, , FOR SWEDEN ONLY
6	381144	1	CLAMP, HOSE, #60, 3.31/4.25 Type F Worm, , BSN C479
6	556701	1	CLAMP, , ASN D480
7	9513271	1	CLAMP,
8	102043	2	GROMMET,
9	9627887	4	BOLT, Hex, 7/16"-14 x 1 1/4", G5,
10	140046	4	WASHER, SPRING, Belleville, M12,
11	86566100	4	SCREW, Hex Soc Hd, M10 x 35, 12.9,
12	84072984	1	SUPPORT,
13	100016	4	NUT, M10, Cl 8,
14	140045	4	WASHER, SPRING, Belleville, M10,
15	84058795	1	COMPRESSOR, AIR,
16	89706690	3	NUT, M8, Cl 8,
17	322358	3	WASHER, SPRING, Belleville, M8,
18	431352	1	CLAMP,
19	84814574	1	BRACKET,
20	378243	3	WASHER, M8,
21	43127	2	BOLT, Hex, M8 x 25, 8.8,
22	300381	1	BOLT, Hex, M8 x 35, 8.8, M8x35
23	431351	1	CLAMP,
24	84441383	1	SWITCH, , SEE FIGURE 06.701, BSN C515
24	87366044	1	SWITCH, PRESSURE, , SEE FIGURE 06.701, ASN D516
25	84441384	1	SWITCH, , SEE FIGURE 06.701, BSN C515
25	87366045	1	SWITCH, PRESSURE, , SEE FIGURE 06.701, ASN D516
26	84058188	1	CONNECTOR, WIRE,
27	15896221	1	NUT, M6, Cl 10,
28	322357	1	WASHER, SPRING, Belleville, M6,
29	84439595	1	BRACKET,
30	9824259	1	WASHER, M6 x 12 x 1.6,
31	86977789	1	BOLT, Hex, M6 x 35, 8.8,
32	89993154	1	CLAMP,
33	84058832	1	CLIP,
34	NS	1	NOT SERVICED, RIVET

10.245(01) AIR CONDITIONER UNIT : MOUNTING GROUP

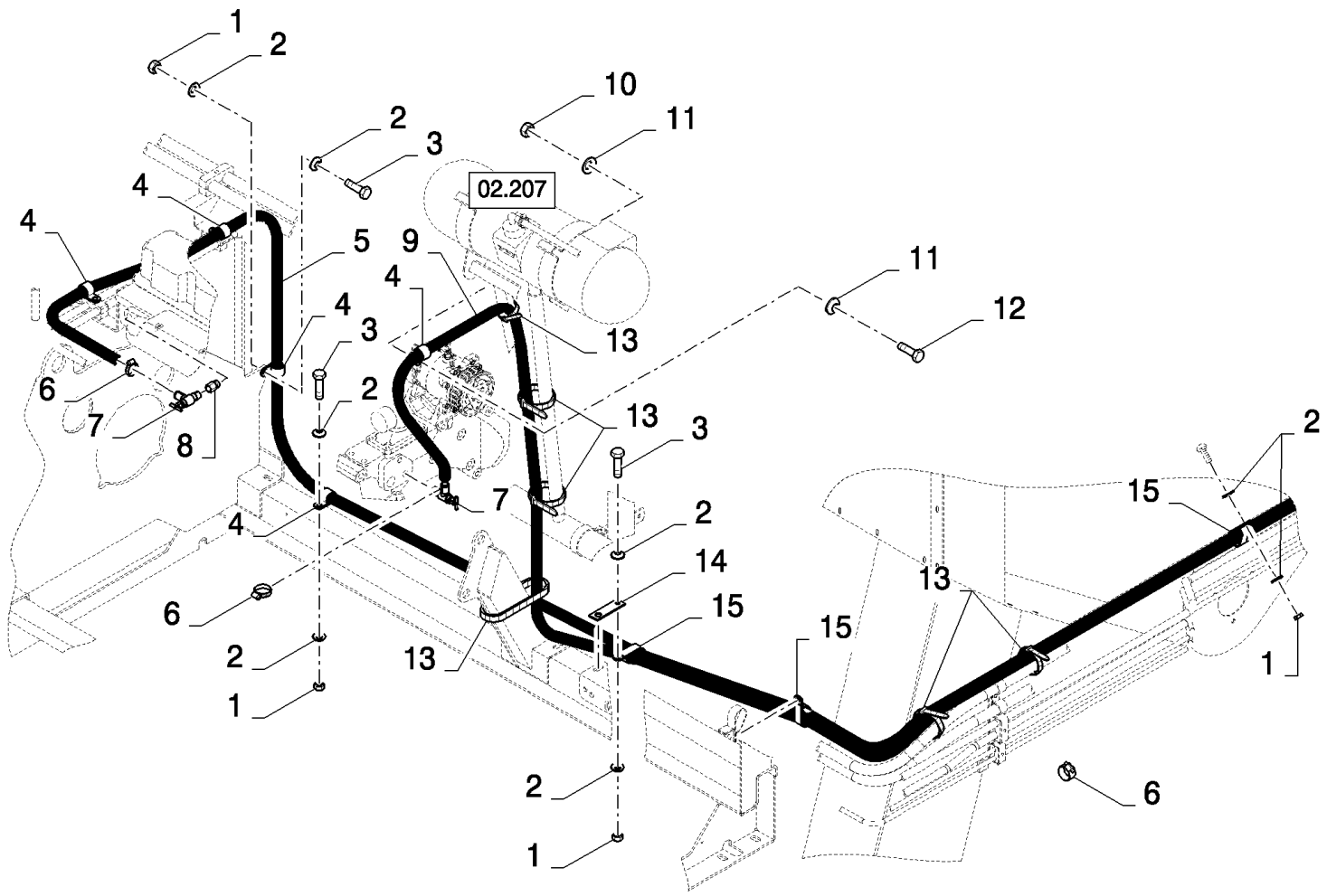

CS660 COMBINE BASE UNIT (1/03-) - Cab

10.245(01) AIR CONDITIONER UNIT : MOUNTING GROUP

ссылка	Номер детали	Кол-во	Описание
1	15896221	8	NUT, M6, Cl 10,
2	322357	16	WASHER, SPRING, Belleville, M6,
3	86977786	3	BOLT, Hex, M6 x 25, 8.8,
4	9827902	5	CLAMP, {PP:89827902} 1", Insul, 3/8" Bolt,
5	84607279	1	HOSE, L=6.8M
6	326082	4	CLAMP, {PP:80326082}
7	83961305	2	VALVE, SHUT-OFF,
8	918688	1	CONNECTOR, HYD., {PP:80918688}
9	84607280	1	HOSE, L=5.6M
10	89706690	1	NUT, M8, Cl 8,
11	322358	2	WASHER, SPRING, Belleville, M8,
12	300381	1	BOLT, {PP:80300381} Hex, M8 x 35, 8.8, M8x35
13	89994404	6	CLIP, HOSE,
14	84022413	1	SUPPORT,
15	9513271	7	CLAMP, {PP:89513271}

10.246(01) AIR CONDITIONER

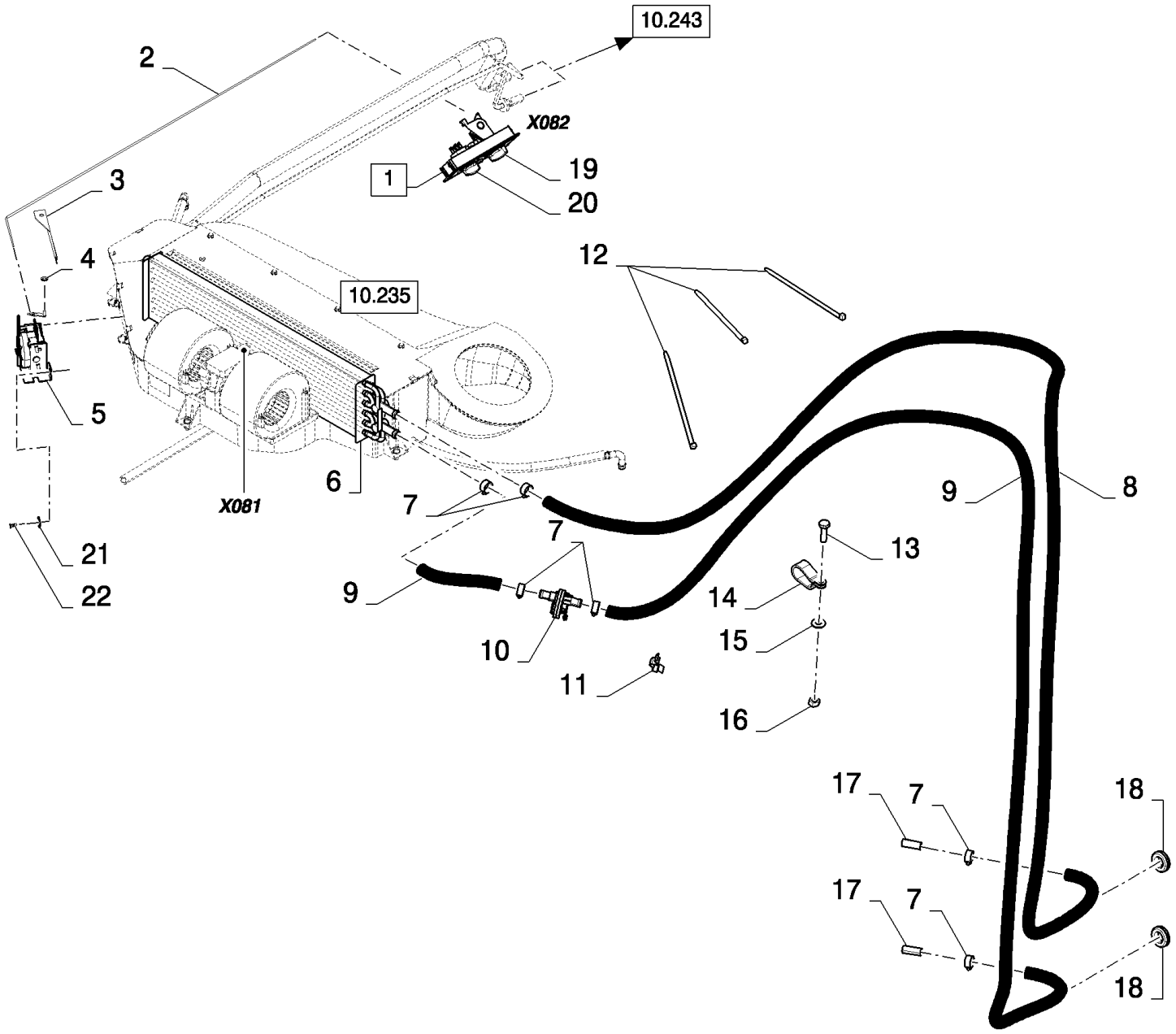

CS660 COMBINE BASE UNIT (1/03-) - Cab

10.246(01) AIR CONDITIONER

ссылка	Номер детали	Кол-во	Описание
1	84607105	1	ELECTRONIC UNIT, CONTROL, (19,20), BSN C491
1	87354648	1	PANEL, CONTROL, , ASN D492
2	84814476	1	CABLE, , AIRCO WITH HEATING, BSN C491
2	87383765	1	CABLE, , AIRCO WITH HEATING, ASN D492
2	84814473	1	CABLE, , AIRCO WITHOUT HEATING, BSN C491
2	87383764	1	CABLE, , AIRCO WITHOUT HEATING, ASN D492
3	84814475	1	BRACKET, , AIRCO WITHOUT HEATING
4	84819630	1	WASHER, , AIRCO WITHOUT HEATING
5	84814477	1	SWITCH, THERMOSTATIC, , AIRCO WITH HEATING
5	84814474	1	SWITCH, THERMOSTATIC, , AIRCO WITHOUT HEATING
6	84814478	1	COIL, , AIRCO WITH HEATING
7	326082	6	CLAMP, , AIRCO WITH HEATING
8	84607279	1	HOSE, L=3.2M, AIRCO WITH HEATING
9	84607280	1	HOSE, L=3.2M, AIRCO WITH HEATING
10	87354381	1	VALVE, , AIRCO WITH HEATING
11	84807149	1	CLIP, , AIRCO WITH HEATING
12	368582	3	STRAP, , AIRCO WITH HEATING
13	120100	1	BOLT, Hex, M6 x 20, 8.8, , AIRCO WITH HEATING
14	9513271	1	CLAMP, , AIRCO WITH HEATING
15	322357	1	WASHER, SPRING, Belleville, M6, , AIRCO WITH HEATING
16	15896221	1	NUT, M6, Cl 10, , AIRCO WITH HEATING
17	89994350	2	CONNECTOR, HYD., , AIRCO WITH HEATING
18	173011	2	GROMMET, , AIRCO WITH HEATING
19	84790377	1	KNOB, CONTROL, BSN C487
19	87354776	2	KNOB, , ASN D488
20	84790378	1	SWITCH, FAN SPEED, BSN C487
21	89824840	2	WASHER, 4MM
22	353075	2	SCREW,

WHEELS/TRACKS	**ROUES/CHENILLES**	**RUEDAS/ORUGAS**	**HJUL/BÆLTETRÆK**
RUOTI/CINGOLATURA	**RÄDER/RAUPENKETTEN**	**RODAS/RASTOS**	**WIELEN/RUPSBANDEN**

SEC. 11

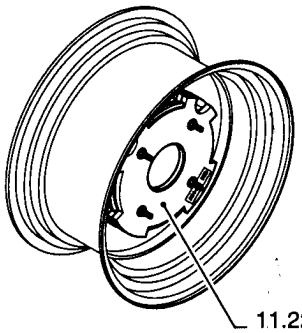

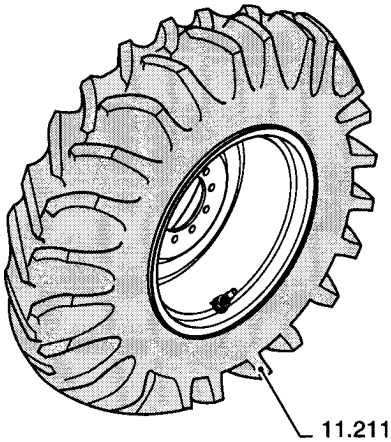

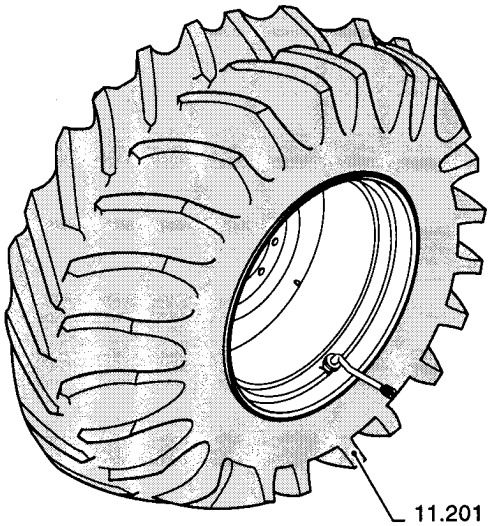

ссылка	Номер детали	Кол-во	Описание

11.202(01) TRACTION WHEELS : 1050/50R32 - 178A8(-118) SB

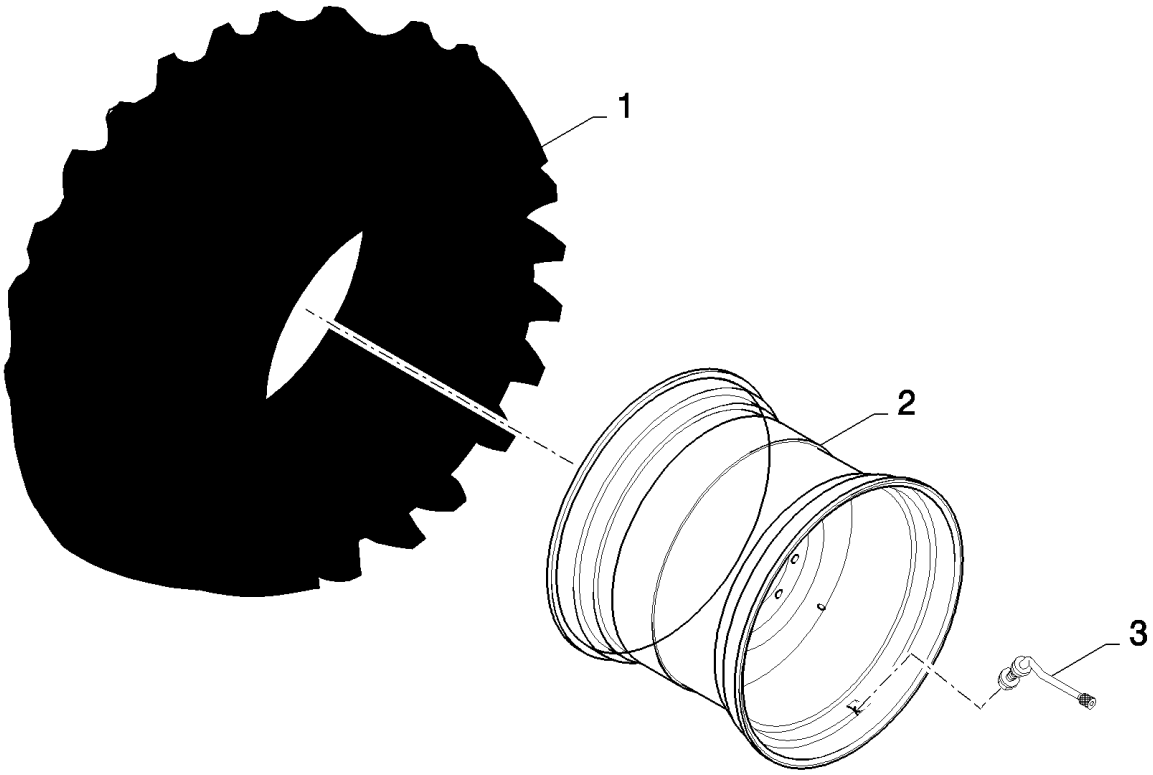

CS660 COMBINE BASE UNIT (1/03-) - Wheels/Tracks

11.202(01) TRACTION WHEELS : 1050/50R32 - 178A8(-118) SB

ссылка	Номер детали	Кол-во	Описание
1	84100135	2	TYRE/TIRE,
2	84989723	2	RIM,
3	397236	2	VALVE STEM, , BSN C423
3	84460168	2	VALVE STEM, , ASN D424

11.204(01) TRACTION WHEELS : 620/75R34-170A8-DT(-75)

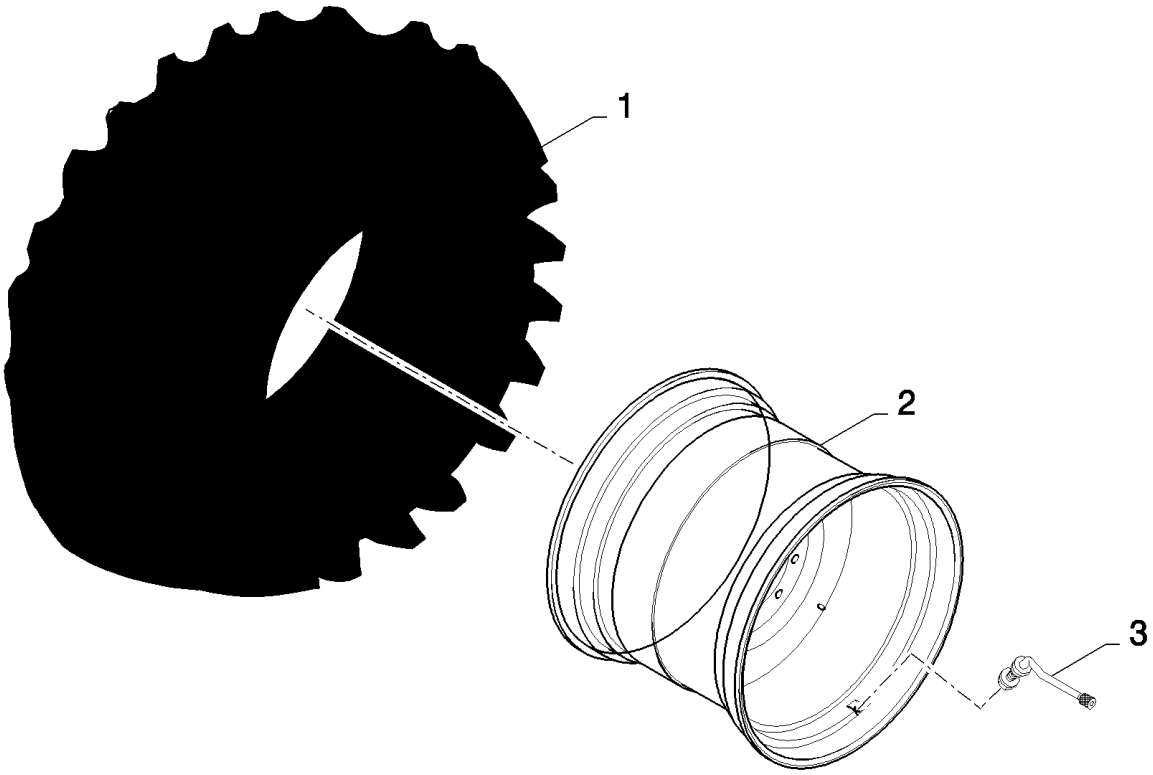

CS660 COMBINE BASE UNIT (1/03-) - Wheels/Tracks

11.204(01) TRACTION WHEELS : 620/75R34-170A8-DT(-75)

ссылка	Номер детали	Кол-во	Описание
1	84036030	2	TYRE/TIRE,
2	84814072	2	RIM, , FOR CS520, CS540, CS640 ONLY
2	84817048	2	RIM, , FOR CS660 ONLY
3	397236	2	VALVE STEM, {PP:80397236}

11.205(01) TRACTION WHEELS : 650/75R32-167A8-DT(-24)

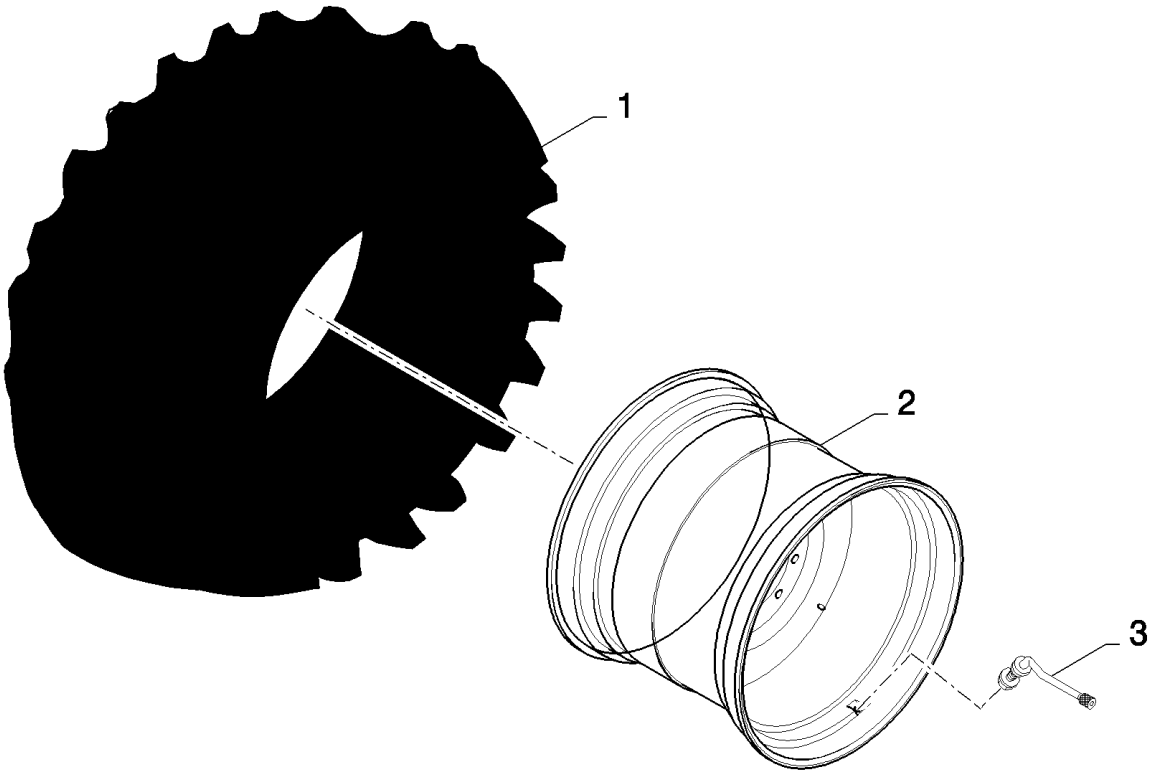

CS660 COMBINE BASE UNIT (1/03-) - Wheels/Tracks

11.205(01) TRACTION WHEELS : 650/75R32-167A8-DT(-24)

ссылка	Номер детали	Кол-во	Описание
1	84078788	2	TYRE/TIRE,
2	84429210	2	RIM, , FOR CS520, CS540, CS640 ONLY
2	84817046	2	RIM, , FOR CS660 ONLY
3	397236	2	VALVE STEM, {PP:80397236}

11.206(01) TRACTION WHEELS : 650/75R32-172A8(-24)5B

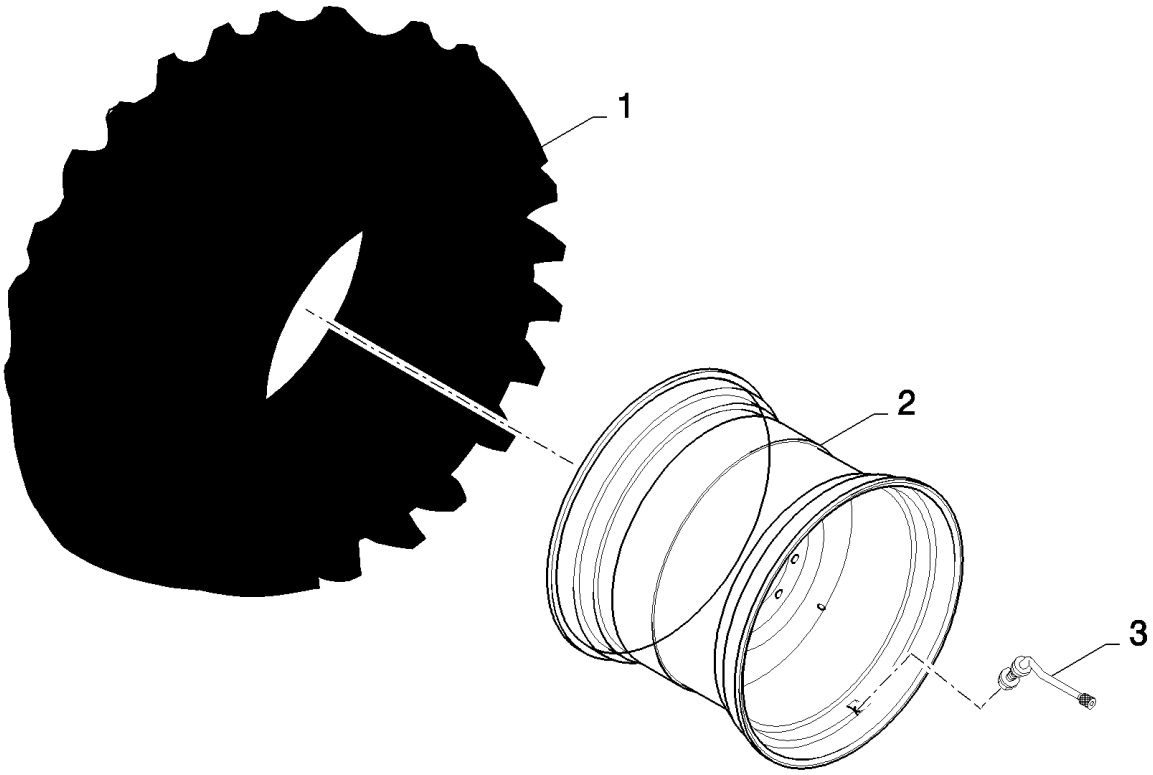

CS660 COMBINE BASE UNIT (1/03-) - Wheels/Tracks

11.206(01) TRACTION WHEELS : 650/75R32-172A8(-24)5B

ссылка	Номер детали	Кол-во	Описание
1	84068189	2	TYRE/TIRE,
2	84817046	2	RIM,
3	397236	2	VALVE STEM, {PP:80397236}

11.209(01) TRACTION WHEELS : 900/60R32-176A8-DT(-113)

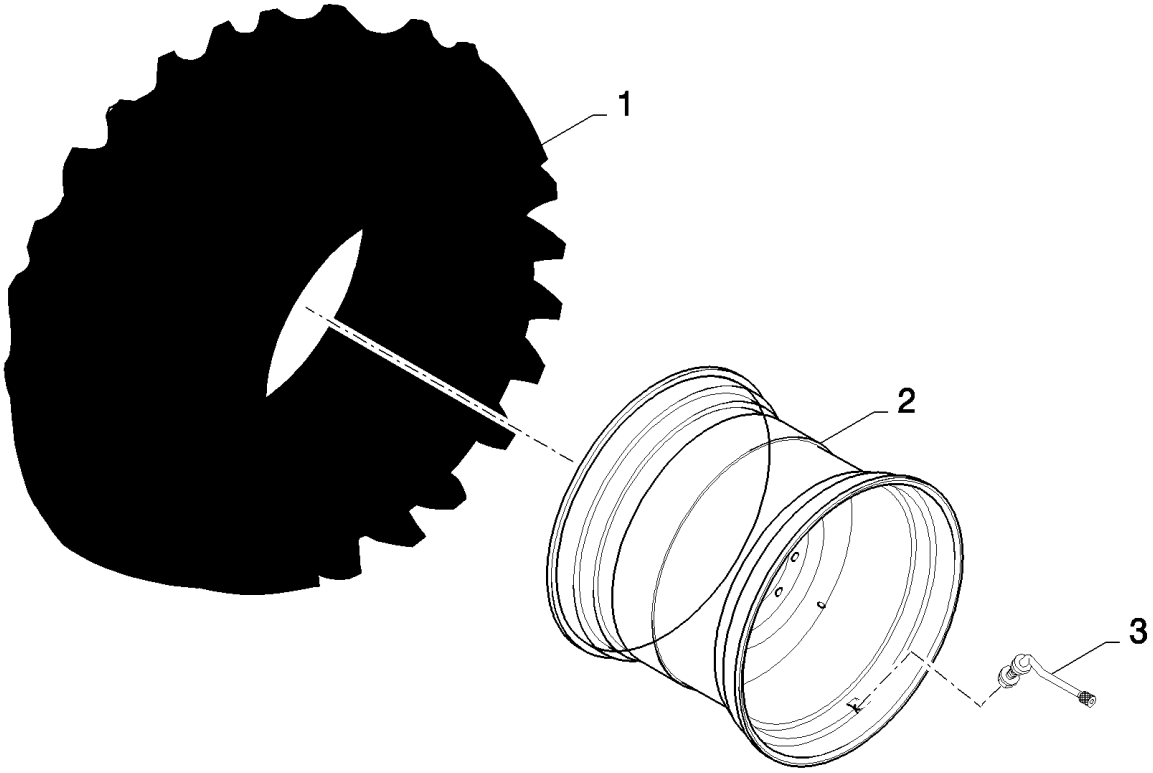

CS660 COMBINE BASE UNIT (1/03-) - Wheels/Tracks

11.209(01) TRACTION WHEELS : 900/60R32-176A8-DT(-113)

ссылка	Номер детали	Кол-во	Описание
1	84100134	2	TYRE/TIRE,
2	84429205	2	RIM, , FOR CS540, CS640 ONLY
2	84429218	2	RIM, , FOR CS660 ONLY
3	397236	2	VALVE STEM, {PP:80397236}

11.211(01) STEERING WHEELS : 16.0/70-20(SGI 1-3)

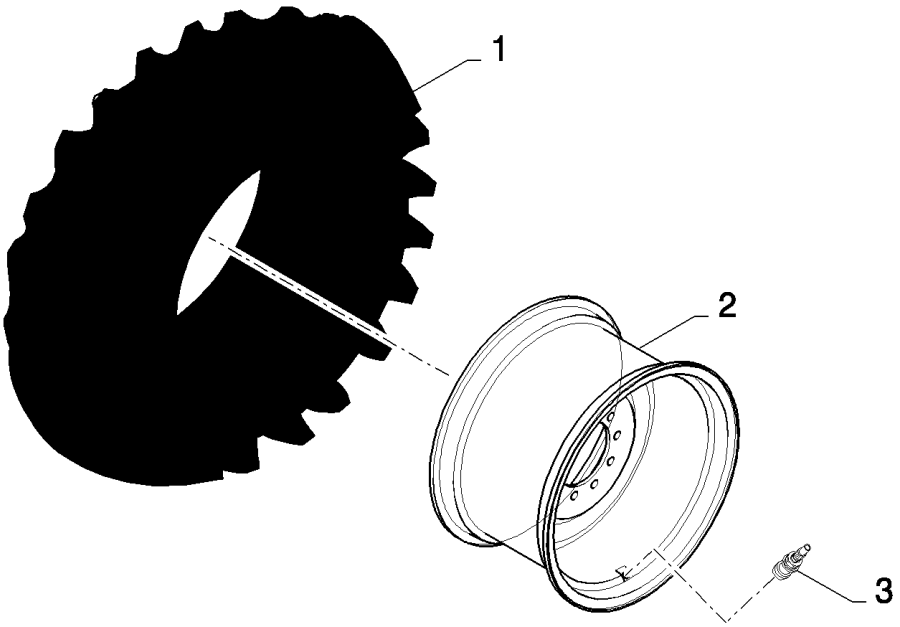

CS660 COMBINE BASE UNIT (1/03-) - Wheels/Tracks

11.211(01) STEERING WHEELS : 16.0/70-20(SGI 1-3)

ссылка	Номер детали	Кол-во	Описание
1	445960	2	TYRE/TIRE, , BSN C427
1	87324431	2	TYRE/TIRE, , ASN D428
2	84814083	2	RIM,
3	395448	2	VALVE STEM,

11.212(01) STEERING WHEELS : 16.5/85-28(SGI 13)

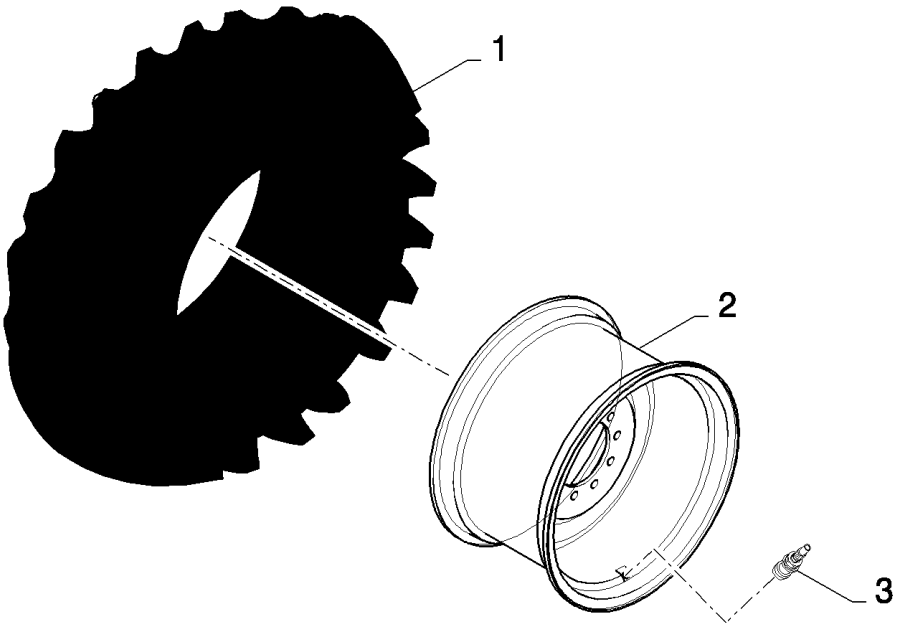

CS660 COMBINE BASE UNIT (1/03-) - Wheels/Tracks

11.212(01) STEERING WHEELS : 16.5/85-28(SGI 13)

ссылка	Номер детали	Кол-во	Описание
1	84036026	2	TYRE/TIRE,
2	84814085	2	RIM,
3	395448	2	VALVE STEM, {PP:80395448}

11.213(01) STEERING WHEELS : 16.0/70-20(SGI I-1)

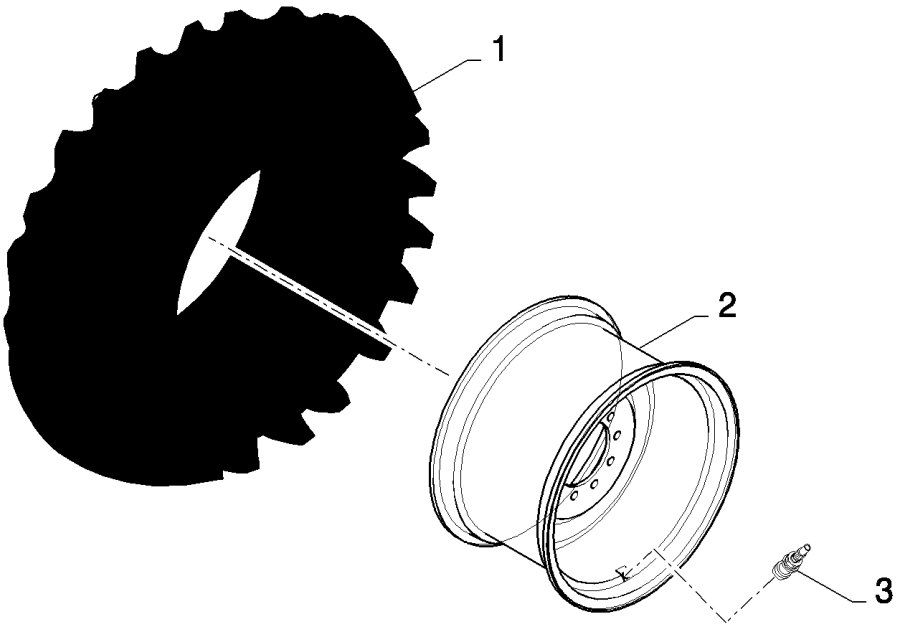

CS660 COMBINE BASE UNIT (1/03-) - Wheels/Tracks

11.213(01) STEERING WHEELS : 16.0/70-20(SGI I-1)

ссылка	Номер детали	Кол-во	Описание
1	84036004	2	TYRE/TIRE,
2	84814083	2	RIM,
3	395448	2	VALVE STEM, {PP:80395448}

11.214(01) STEERING WHEELS : 460/70R24(IT 520)

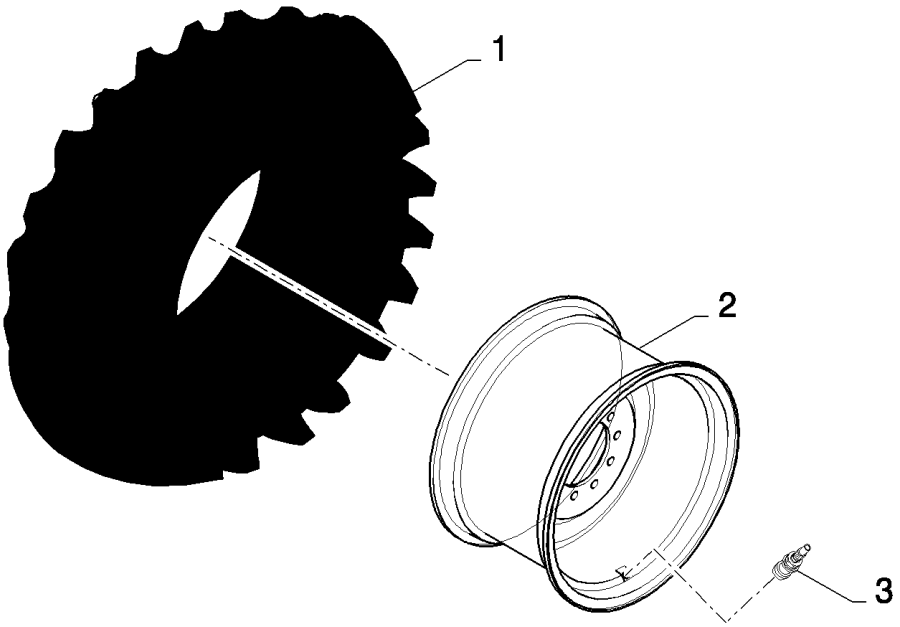

CS660 COMBINE BASE UNIT (1/03-) - Wheels/Tracks

11.214(01) STEERING WHEELS : 460/70R24(IT 520)

ссылка	Номер детали	Кол-во	Описание
1	9514625	2	TYRE/TIRE, {PP:89514625}
2	84814081	2	RIM,
3	395448	2	VALVE STEM, {PP:80395448}

11.215(01) STEERING WHEELS : 460/70R24IND-150A8 - C387 ; 460/70R24-152A8 - D388

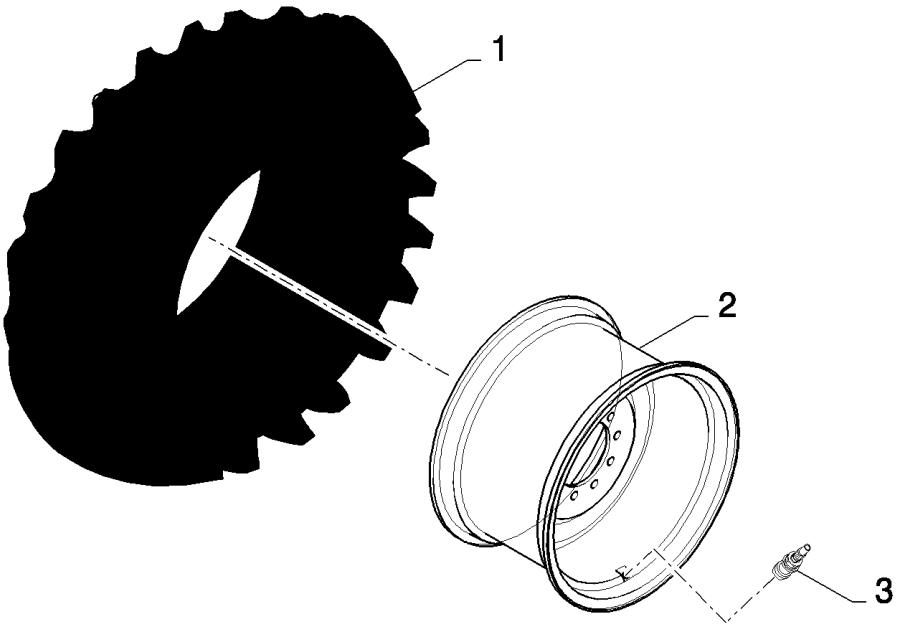

CS660 COMBINE BASE UNIT (1/03-) - Wheels/Tracks

11.215(01) STEERING WHEELS : 460/70R24IND-150A8 - C387 ; 460/70R24-152A8 - D388

ссылка	Номер детали	Кол-во	Описание
1	9514625	2	TYRE/TIRE, , BSN C387
1	84801075	2	TYRE/TIRE, , ASN D388
2	84989725	2	RIM,
3	395448	2	VALVE STEM,

11.216(01) STEERING WHEELS : 540/65R24-146A8-(-60)

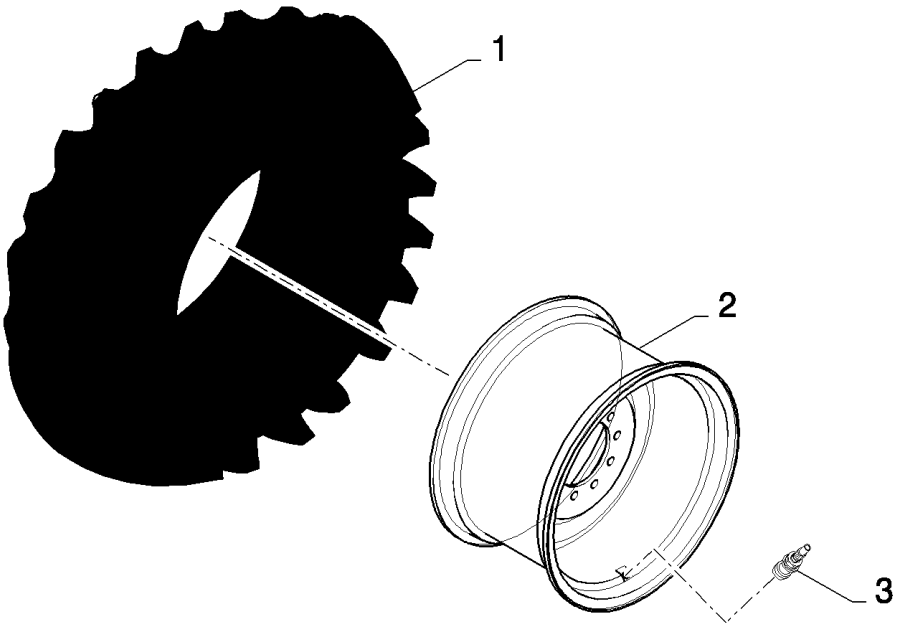

CS660 COMBINE BASE UNIT (1/03-) - Wheels/Tracks

11.216(01) STEERING WHEELS : 540/65R24-146A8-(-60)

ссылка	Номер детали	Кол-во	Описание
1	84026457	2	TYRE/TIRE, , BSN C363
1	84806567	2	TYRE/TIRE, , ASN D364
2	84455745	2	RIM, , BSN C415
2	84989894	2	RIM, , ASN D416
3	395448	2	VALVE STEM,

11.217(01) STEERING WHEELS : 540/65R24(DT820 R-1W)

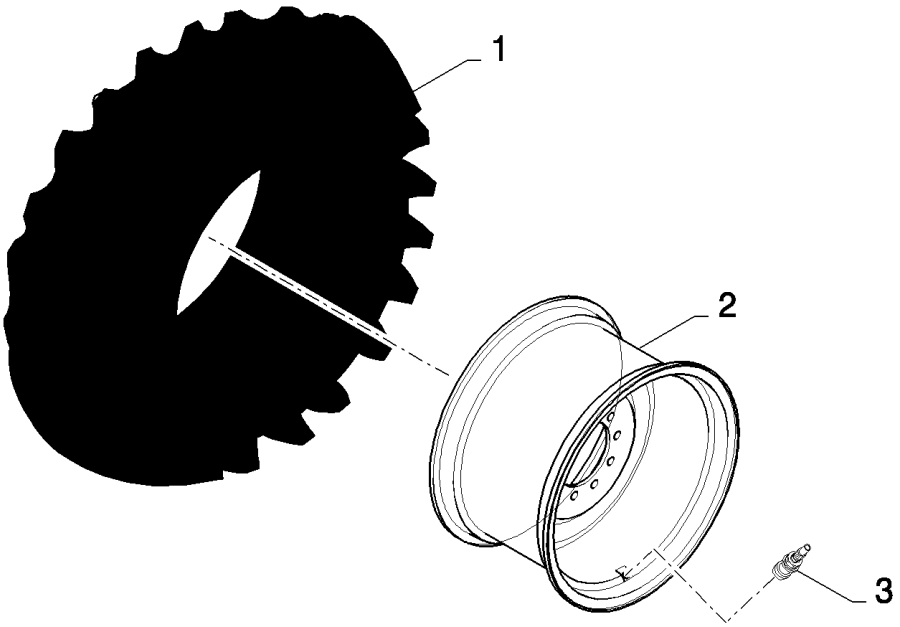

CS660 COMBINE BASE UNIT (1/03-) - Wheels/Tracks

11.217(01) STEERING WHEELS : 540/65R24(DT820 R-1W)

ссылка	Номер детали	Кол-во	Описание
1	84026457	2	TYRE/TIRE,
2	84814081	2	RIM,
3	395448	2	VALVE STEM, {PP:80395448}

11.220(01) TRACTION WHEELS : 800/65R32 - 172A8 - DT822 (42)

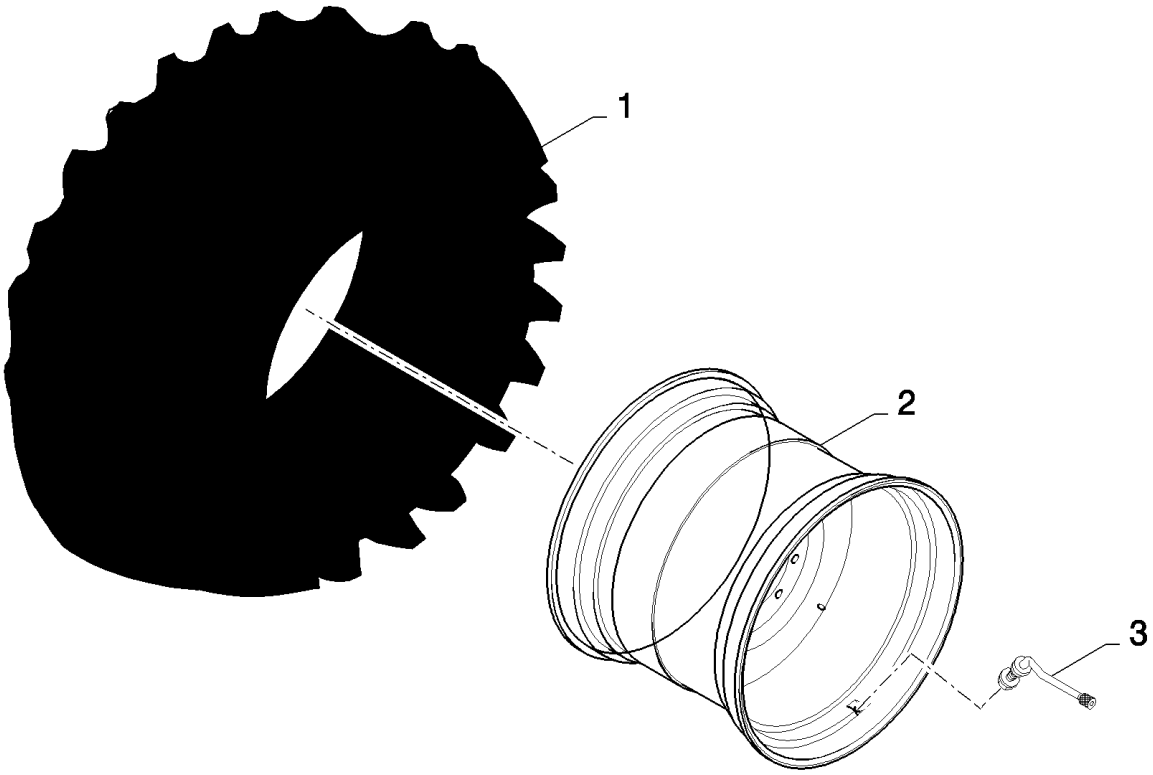

CS660 COMBINE BASE UNIT (1/03-) - Wheels/Tracks

11.220(01) TRACTION WHEELS : 800/65R32 - 172A8 - DT822 (42)

ссылка	Номер детали	Кол-во	Описание
1	84078790	2	TYRE/TIRE,
2	84429203	2	RIM,
3	397236	2	VALVE STEM, {PP:80397236}

11.221(01) STEERING WHEELS : 540/65R24 - 146A8(-60)

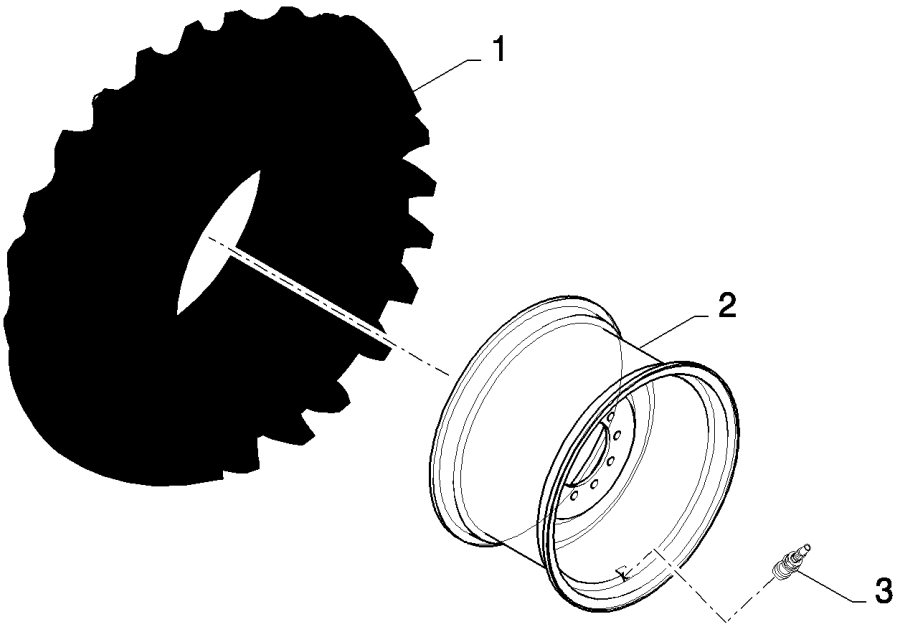

CS660 COMBINE BASE UNIT (1/03-) - Wheels/Tracks

11.221(01) STEERING WHEELS : 540/65R24 - 146A8(-60)

ссылка	Номер детали	Кол-во	Описание
1	84806567	2	TYRE/TIRE,
2	84989894	2	RIM,
3	395448	2	VALVE STEM, {PP:80395448}

11.222(01) TRACTION WHEELS : 800/65R32 - 172A8 - DT822 (100)

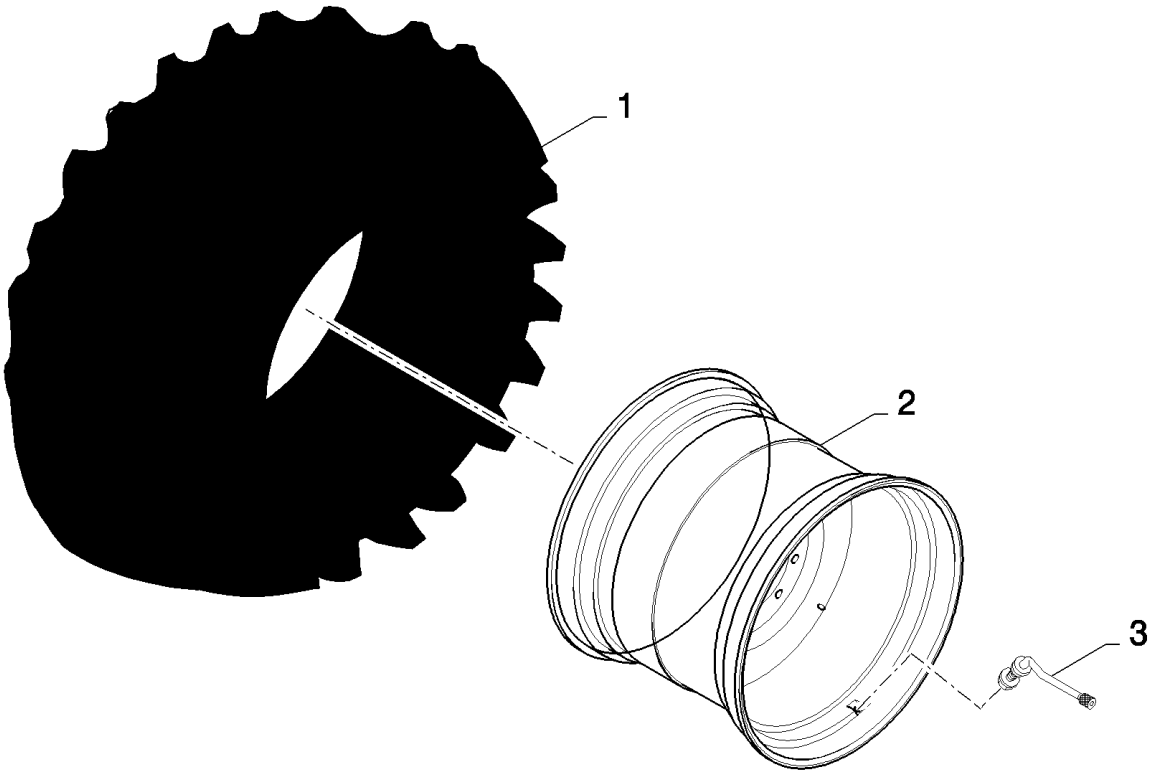

CS660 COMBINE BASE UNIT (1/03-) - Wheels/Tracks

11.222(01) TRACTION WHEELS : 800/65R32 - 172A8 - DT822 (100)

ссылка	Номер детали	Кол-во	Описание
1	84078790	2	TYRE/TIRE,
2	84429218	2	RIM,
3	397236	2	VALVE STEM, {PP:80397236}

11.223(01) COUNTERWEIGHTS

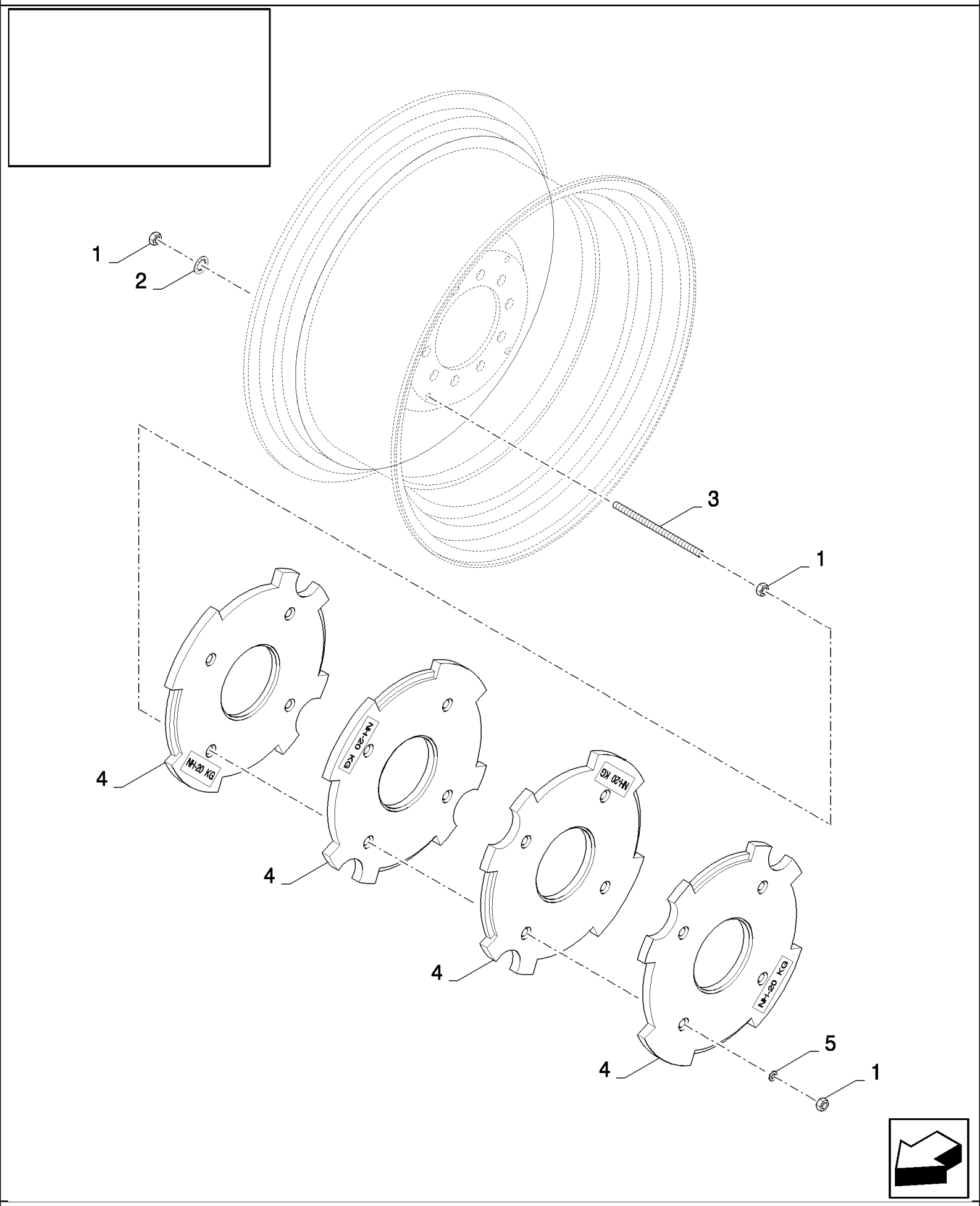

CS660 COMBINE BASE UNIT (1/03-) - Wheels/Tracks

11.223(01) COUNTERWEIGHTS

ссылка	Номер детали	Кол-во	Описание
1	9706685	24	NUT, M12, Cl 8,
2	300913	8	WASHER, LOCK, {PP:80300913} 12.5MM
3	84989794	8	ROD, THREADED, M12x220, FOR 200 KG
3	84989795	8	ROD, THREADED, M12x383, FOR 400 KG
4	84438813	10	WEIGHT, COUNTER, , FOR 200 KG
4	84438813	20	WEIGHT, COUNTER, , FOR 400 KG
5	394630	8	WASHER, {PP:80394630} 13MM

11.224(01) TRACTION WHEELS : 710/75R34 - 178A8 (38)

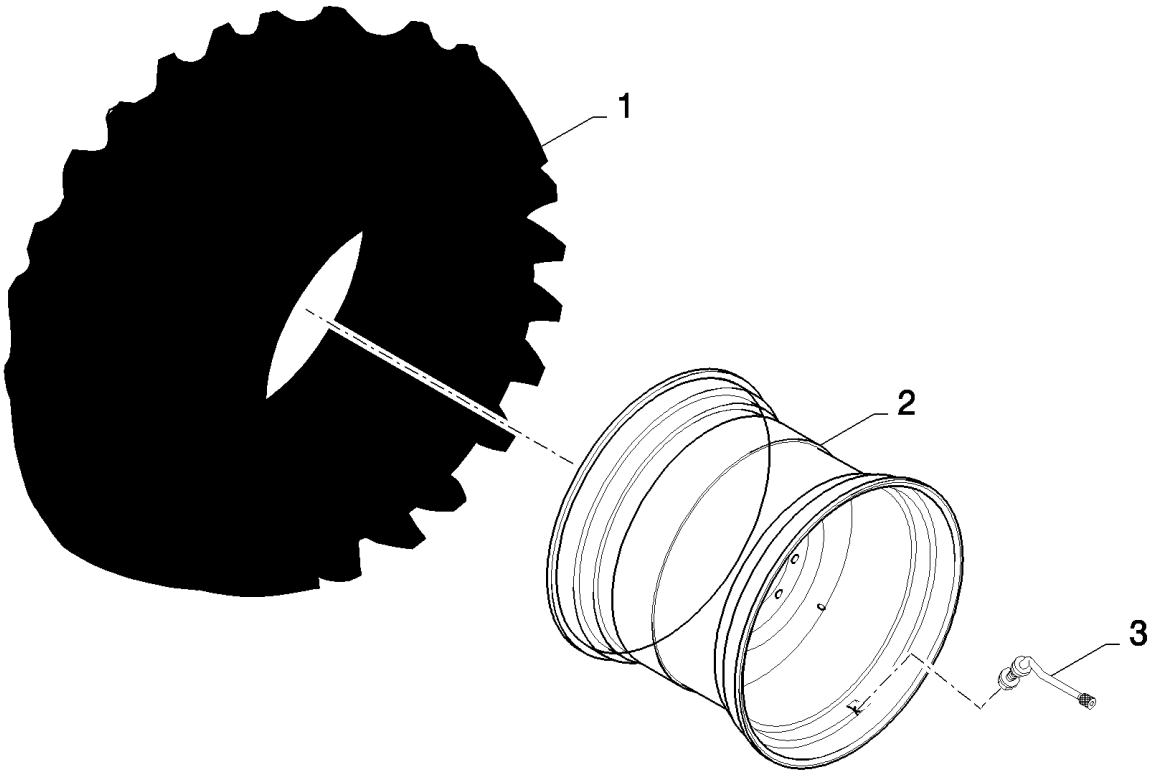

CS660 COMBINE BASE UNIT (1/03-) - Wheels/Tracks

11.224(01) TRACTION WHEELS : 710/75R34 - 178A8 (38)

ссылка	Номер детали	Кол-во	Описание
1	84446099	2	TYRE/TIRE,
2	84457054	2	RIM,
3	397236	2	VALVE STEM, , BSN C423
3	84460168	2	VALVE STEM, , ASN D424

11.231(01) TRACTION WHEELS : 1050/50R32-178A8

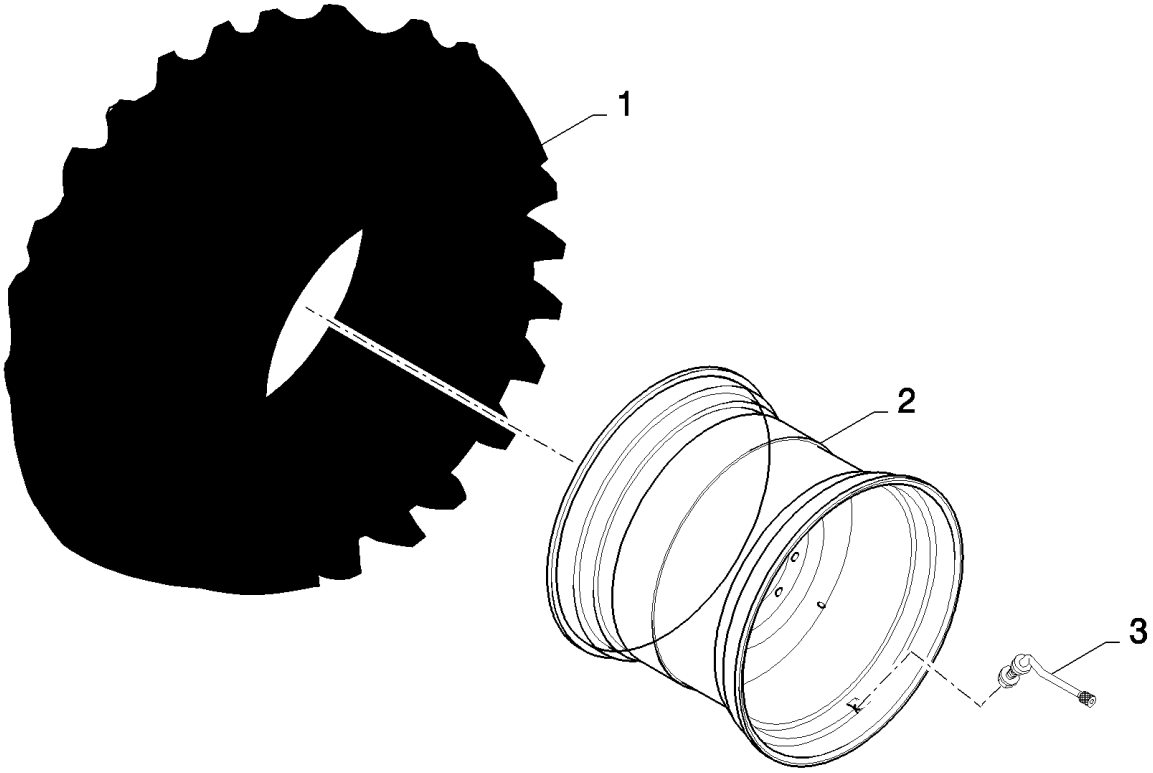

CS660 COMBINE BASE UNIT (1/03-) - Wheels/Tracks

11.231(01) TRACTION WHEELS : 1050/50R32-178A8

ссылка	Номер детали	Кол-во	Описание
1	84100135	2	TYRE/TIRE,
2	84989723	2	RIM,
3	84460168	2	VALVE STEM,

11.233(01) TRACTION WHEELS

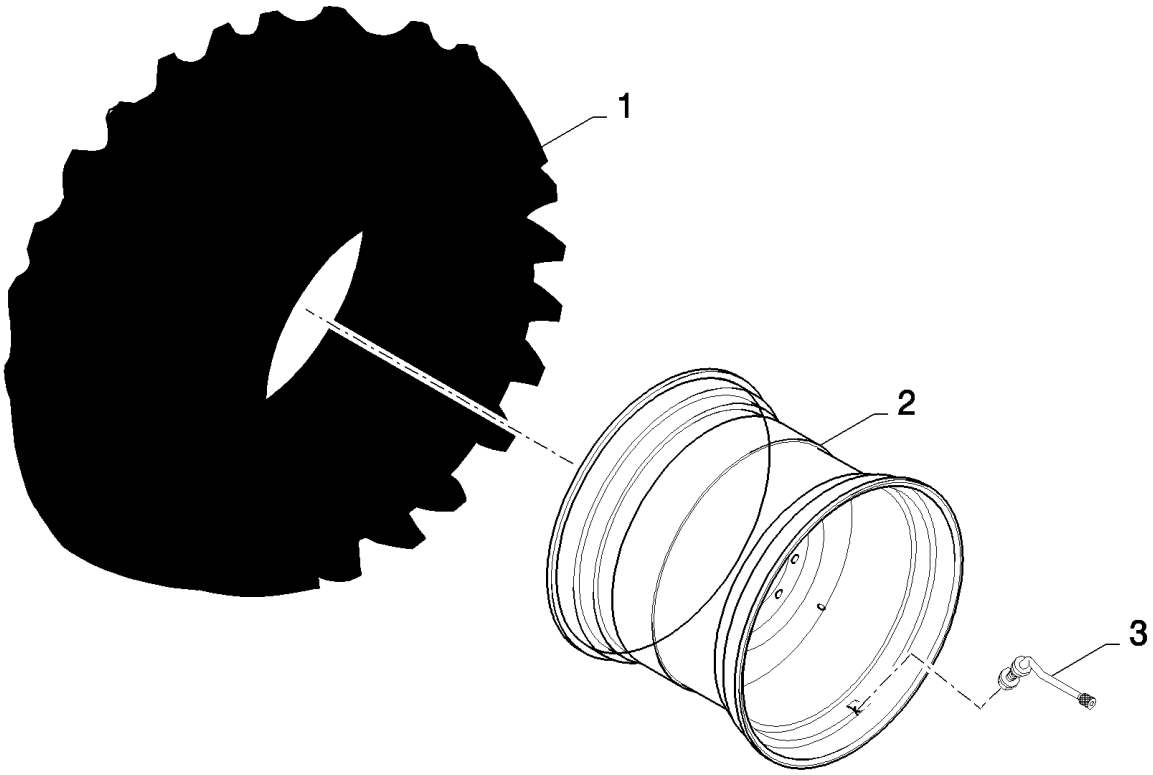

11.233(01) TRACTION WHEELS

ссылка	Номер детали	Кол-во	Описание
1	84068561	2	TYRE/TIRE,
2	84429218	2	RIM,
3	84460168	2	VALVE STEM,

MAIN FRAME	**CHÂSSIS PRINCIPAL**	**BASTIDOR PRINCIPAL**	**HOVEDRAMME**
TELAIO PRINCIPALE	**HAUPTGESTELL**	**ESTRUTURA PRINCIPAL**	**HOOFDRAAM**

SEC. 12

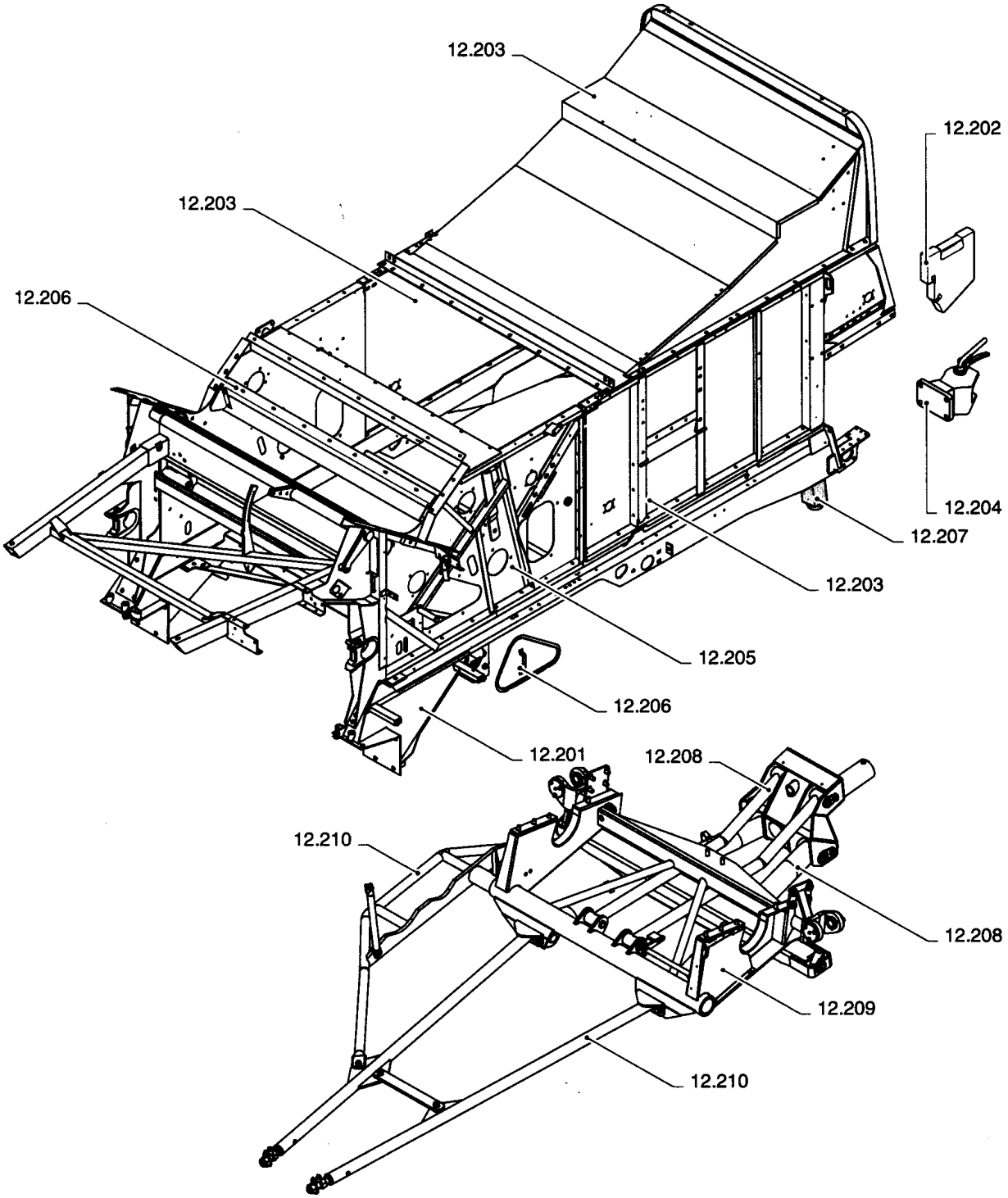

ссылка	Номер детали	Кол-во	Описание

12.201(01) LOWER FRAME, FIXED SHOE

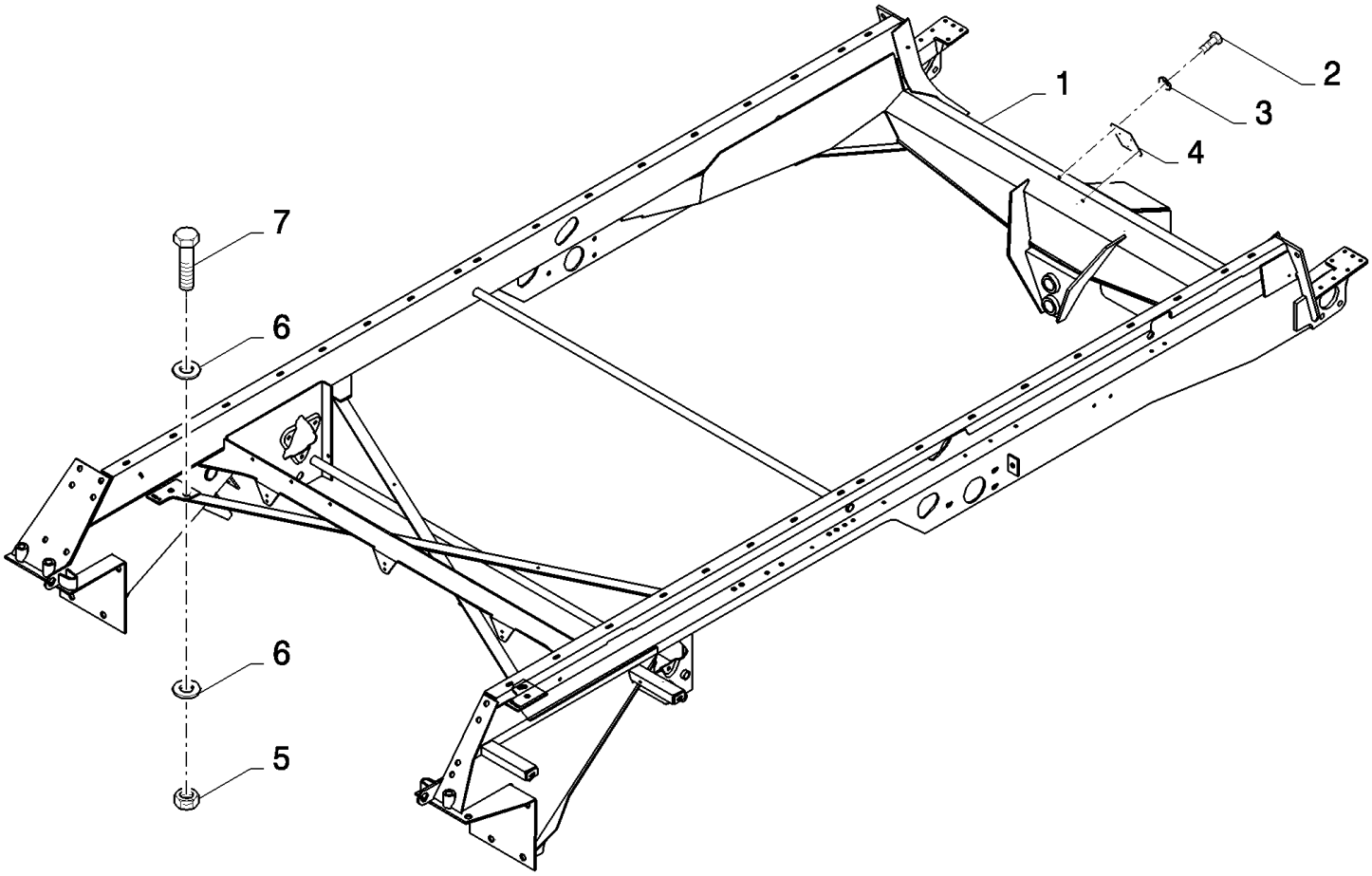

CS660 COMBINE BASE UNIT (1/03-) - Main Frame

12.201(01) LOWER FRAME, FIXED SHOE

ссылка	Номер детали	Кол-во	Описание
1	84989473	1	FRAME, , FOR CS520, CS540 ONLY, FOR CL560 ONLY
1	84075599	1	FRAME, , FOR CS640, CS660 ONLY
2	120104	2	BOLT, Hex, M8 x 20, 8.8,
3	322358	2	WASHER, SPRING, Belleville, M8,
4	84989533	1	PLATE,
5	100020	4	NUT, M16, Cl 8,
6	333040	8	WASHER, {PP:80333040} 16MM
7	120090	4	BOLT, Hex, M16 x 50, 8.8,

12.202(01) COUNTERWEIGHTS, SUPPORT

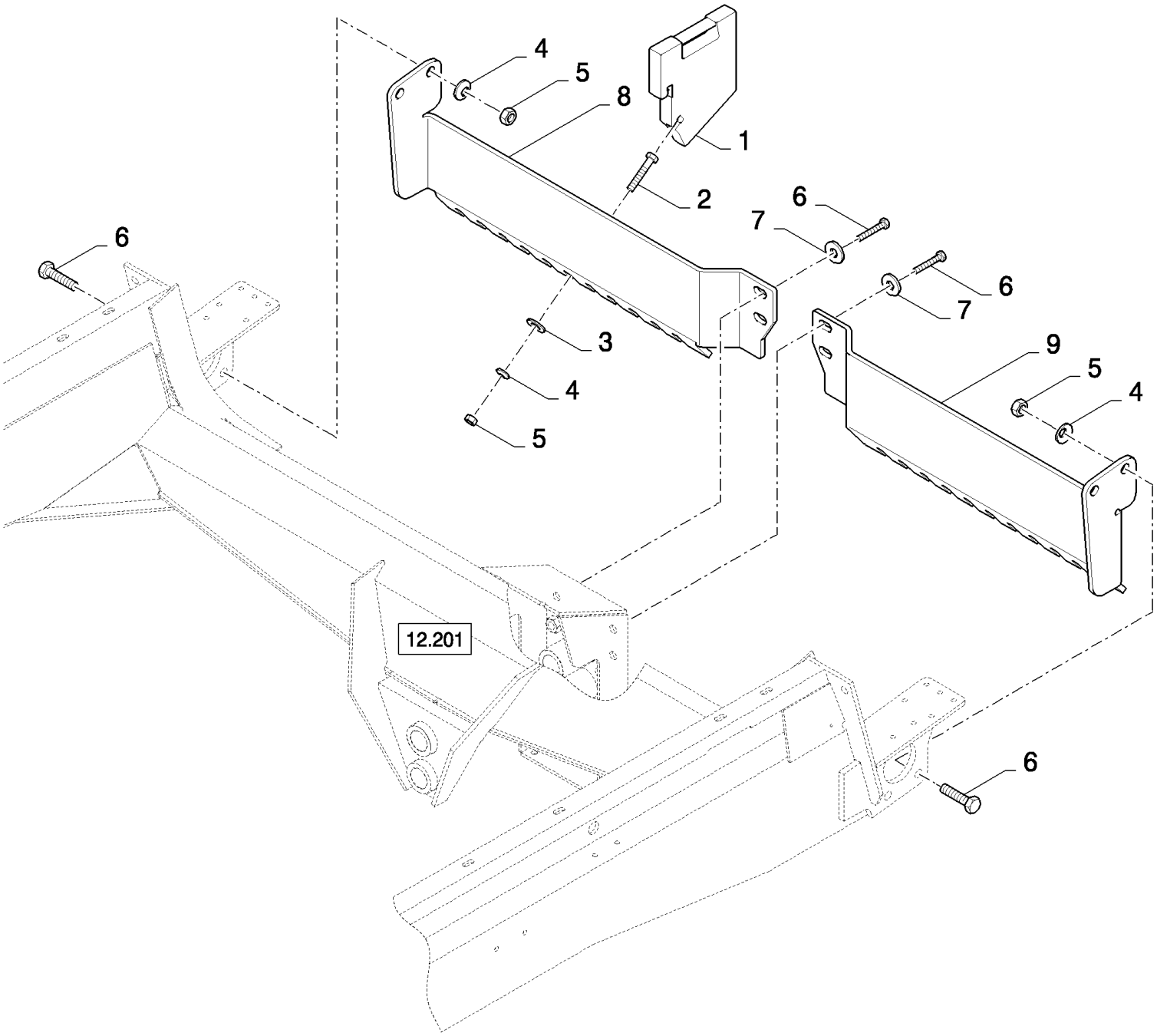

CS660 COMBINE BASE UNIT (1/03-) - Main Frame

12.202(01) COUNTERWEIGHTS, SUPPORT

ссылка	Номер детали	Кол-во	Описание
1	84435924	AR	WEIGHT, ADVANCE DEVICE,
2	120092	AR	BOLT, Hex, M16 x 70, 8.8,
3	451743	AR	WASHER, {PP:80451743} 16MM
4	140048	AR	WASHER, SPRING, Belleville, M16,
5	100020	AR	NUT, M16, Cl 8,
6	385922	8	BOLT, {PP:80385922} Hex, M16 x 45, 8.8, Hex, M16 x 45, 8.8
7	394631	4	WASHER, {PP:80394631} 17MM
8	84438697	1	SUPPORT, , FOR CS520, CS540 ONLY
8	84438689	1	SUPPORT, , FOR CS640, CS660 ONLY
9	84438695	1	SUPPORT, , FOR CS520, CS540 ONLY
9	84437767	1	SUPPORT, , FOR CS640, CS660 ONLY

12.203(01) STRAW WALKER, FRAME

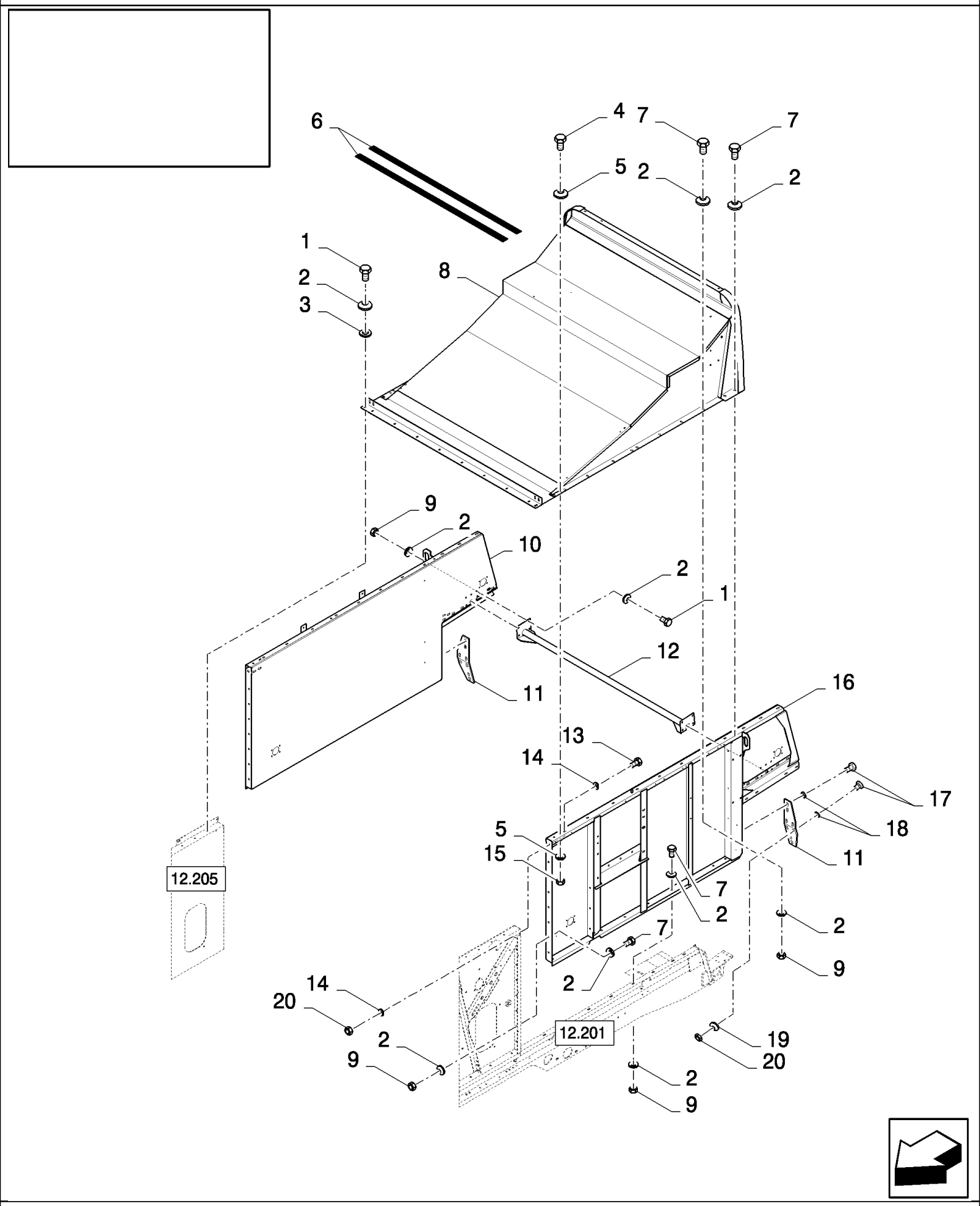

CS660 COMBINE BASE UNIT (1/03-) - Main Frame

12.203(01) STRAW WALKER, FRAME

ссылка	Номер детали	Кол-во	Описание
1	43140	10	BOLT, Hex, M10 x 30, 8.8, Full Thd,
2	140045	94	WASHER, SPRING, Belleville, M10,
3	140042	2	WASHER, M10 x 34 x 3,
4	43127	2	BOLT, Hex, M8 x 25, 8.8,
5	322358	4	WASHER, SPRING, Belleville, M8,
6	401502	2	STRIP, ANTI-SKID, {PP:80401502} 51mm x 18.3 Roll - Cut to Size
7	43139	39	SCREW, {PP:80043139} M10x25
8	84432224	1	FRAME, , FOR CS520, CS540 ONLY, FOR CL560 ONLY
8	84076858	1	FRAME, , FOR CS640, CS660 ONLY
9	100016	45	NUT, M10, Cl 8,
10	84076813	1	FRAME,
11	84438859	2	PLATE,
12	84432212	1	SUPPORT, , FOR CS520, CS540 ONLY, FOR CL560 ONLY
12	84076772	1	SUPPORT, , FOR CS640, CS660 ONLY
13	86508586	2	BOLT, Hex, M16 x 240, 8.8,
14	333041	4	WASHER, {PP:80333041}
15	89706690	2	NUT, M8, Cl 8,
16	84076920	1	FRAME,
17	385922	12	BOLT, {PP:80385922} Hex, M16 x 45, 8.8, Hex, M16 x 45, 8.8
18	84058945	12	WASHER,
19	140048	2	WASHER, SPRING, Belleville, M16,
20	100020	4	NUT, M16, Cl 8,

12.204(01) HITCH

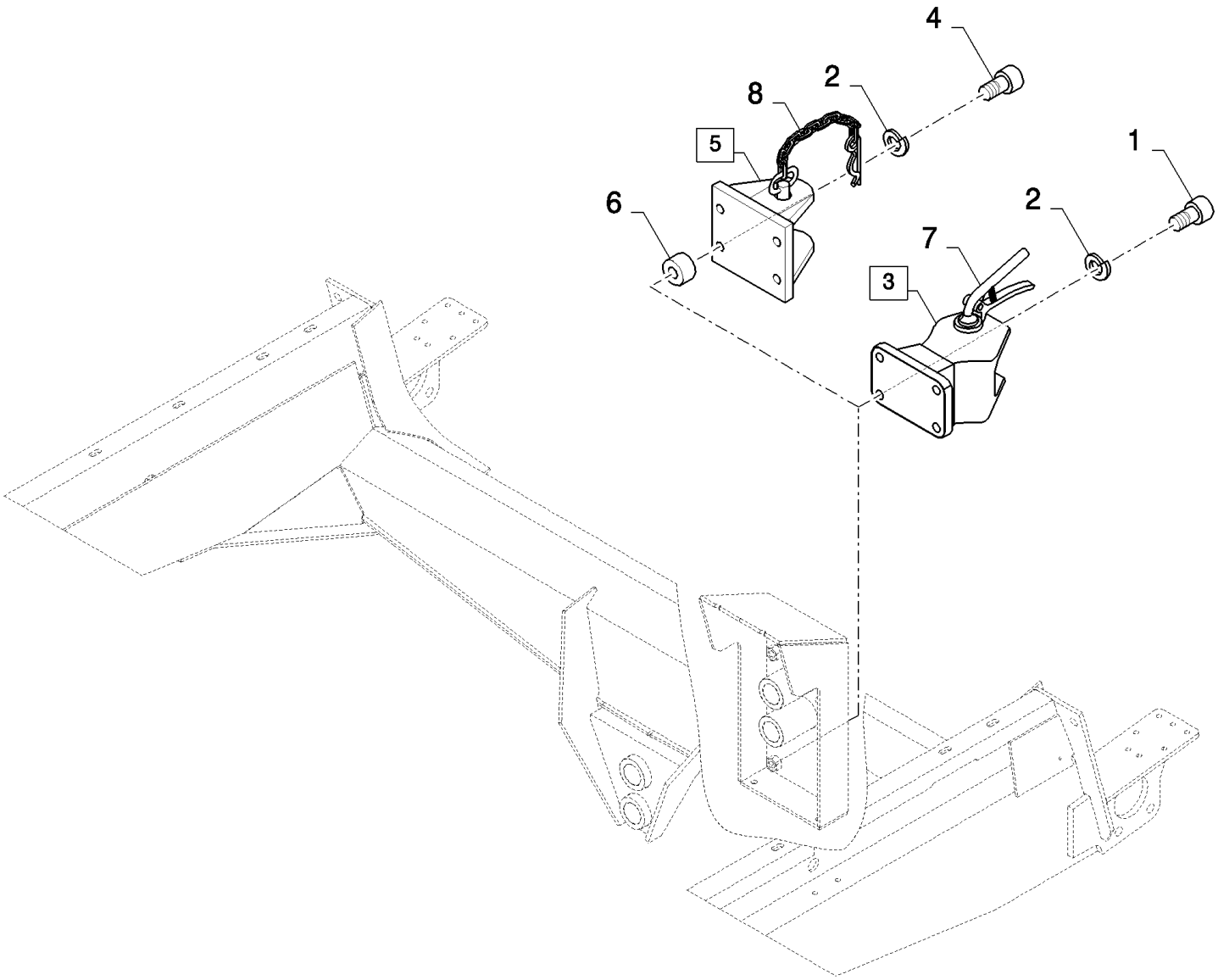

CS660 COMBINE BASE UNIT (1/03-) - Main Frame

12.204(01) HITCH

ссылка	Номер детали	Кол-во	Описание
1	9817243	4	SCREW, {PP:89817243} Hex Soc Hd, M16 x 50, 12.9, Cap, HS, CL 12.9, M16 x 2 x 50
2	86729275	8	WASHER, LOCK, 5/8",
3	84607012	1	TOW HOOK, (7)
4	9838120	4	SCREW, {PP:89838120}
5	84400985	1	HITCH, (8)
6	355392	4	SPACER, {PP:80355392}
7	84801725	1	PIN, HITCH,
8	84817651	1	PIN, HITCH,

12.205(01) FRAME, THRESHING

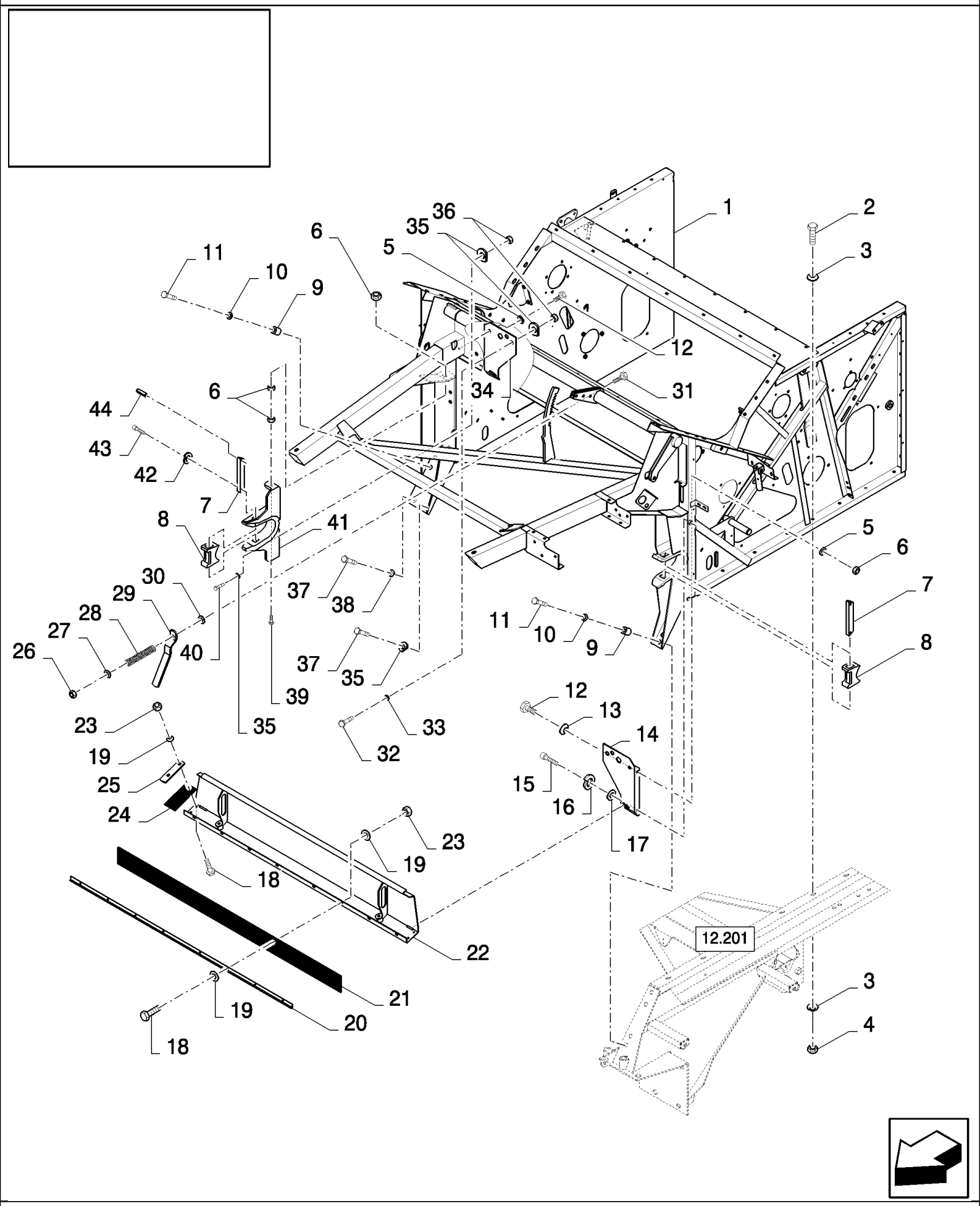

12.205(01) FRAME, THRESHING

ссылка	Номер детали	Кол-во	Описание
1	84431555	1	FRAME, , WITHOUT ROTARY SEPARATOR, FOR CS520, CS540 ONLY, FOR CL560 ONLY
1	84431489	1	FRAME, , WITHOUT ROTARY SEPARATOR, FOR CS640 ONLY
1	84431554	1	FRAME, , FOR CL560 ONLY, FOR CS540 ONLY, WITH ROTARY SEPARATOR
1	84076484	1	FRAME, , WITH ROTARY SEPARATOR, FOR CS640, CS660 ONLY
2	43140	12	BOLT, Hex, M10 x 30, 8.8, Full Thd,
3	140045	AR	WASHER, SPRING, Belleville, M10,
4	100016	12	NUT, M10, Cl 8,
5	140046	4	WASHER, SPRING, Belleville, M12,
6	9706685	5	NUT, M12, Cl 8,
7	9509745	2	BRACKET, {PP:89509745}
8	84100382	2	CLAMP,
9	84073777	8	BUSHING,
10	394631	8	WASHER, {PP:80394631} 16MM
11	120093	8	BOLT, Hex, M16 x 80, 8.8,
12	9706687	4	BOLT, Hex, M12 x 30, 8.8,
13	140018	2	WASHER, M12 x 24 x 2.5,
14	84075281	1	PLATE, LH
15	86512143	2	SCREW, Hex Soc Hd, M12 x 70, 12.9, M12x70
16	412123	2	WASHER, LOCK, M12,
17	140084	2	WASHER, {PP:80140084} 12MM
18	120100	AR	BOLT, Hex, M6 x 20, 8.8,
19	322357	AR	WASHER, SPRING, Belleville, M6,
20	399397	1	SUPPORT, {PP:80399397} , FOR CS520, CS540 ONLY, FOR CL560 ONLY
20	390374	1	PLATE, FIXING, {PP:80390374} , FOR CS640, CS660 ONLY
21	922309	1	CANVAS, {PP:80922309} , FOR CS540 ONLY, FOR CL560 ONLY
21	9501663	1	CANVAS, {PP:89501663} , FOR CS640, CS660 ONLY, BSN C319
21	84818316	1	STRIP, RUBBER, , FOR CS640, CS660 ONLY, ASN D320
22	84432430	1	COVER, , FOR CS520, CS540 ONLY, FOR CL560 ONLY
22	84075272	1	COVER, , FOR CS640, CS660 ONLY
23	353308	AR	NUT, LOCK, M6 x 1, Cl 8,
24	84075149	2	CANVAS,
25	84075180	2	PLATE, FIXING,
26	412141	3	NUT, LOCK, M10 x 1.5, Cl 8,
27	378244	3	WASHER, M10,
28	539991	3	SPRING, {PP:80539991}
29	84434366	3	LEVER,
30	140042	3	WASHER, M10 x 34 x 3,
31	120073	3	BOLT, Hex, M10 x 80, 8.8,
32	43167	4	BOLT, Hex, M16 x 30, 8.8, Full Thd,
33	140048	4	WASHER, SPRING, Belleville, M16,
34	84075282	1	PLATE, RH
35	333041	13	WASHER, {PP:80333041} 16MM
36	100020	8	NUT, M16, Cl 8,
37	43168	2	BOLT, Hex, M16 x 40, 8.8,
38	333040	1	WASHER, {PP:80333040} 16MM

12.205(01) FRAME, THRESHING

ссылка	Номер детали	Кол-во	Описание
39	120124	1	BOLT, Hex, M12 x 90, 8.8,
40	120090	4	BOLT, Hex, M16 x 50, 8.8,
41	84073329	1	SUPPORT,
42	80681	2	WASHER, LOCK, 5/16",
43	9706749	2	SCREW, {PP:89706749} Hex Soc Hd, M8 x 25, 12.9, M8x25
44	9512583	2	PIN, LOCK, {PP:89512583} M10 x 30, Slotted,

12.206(01) FRAME, THRESHING

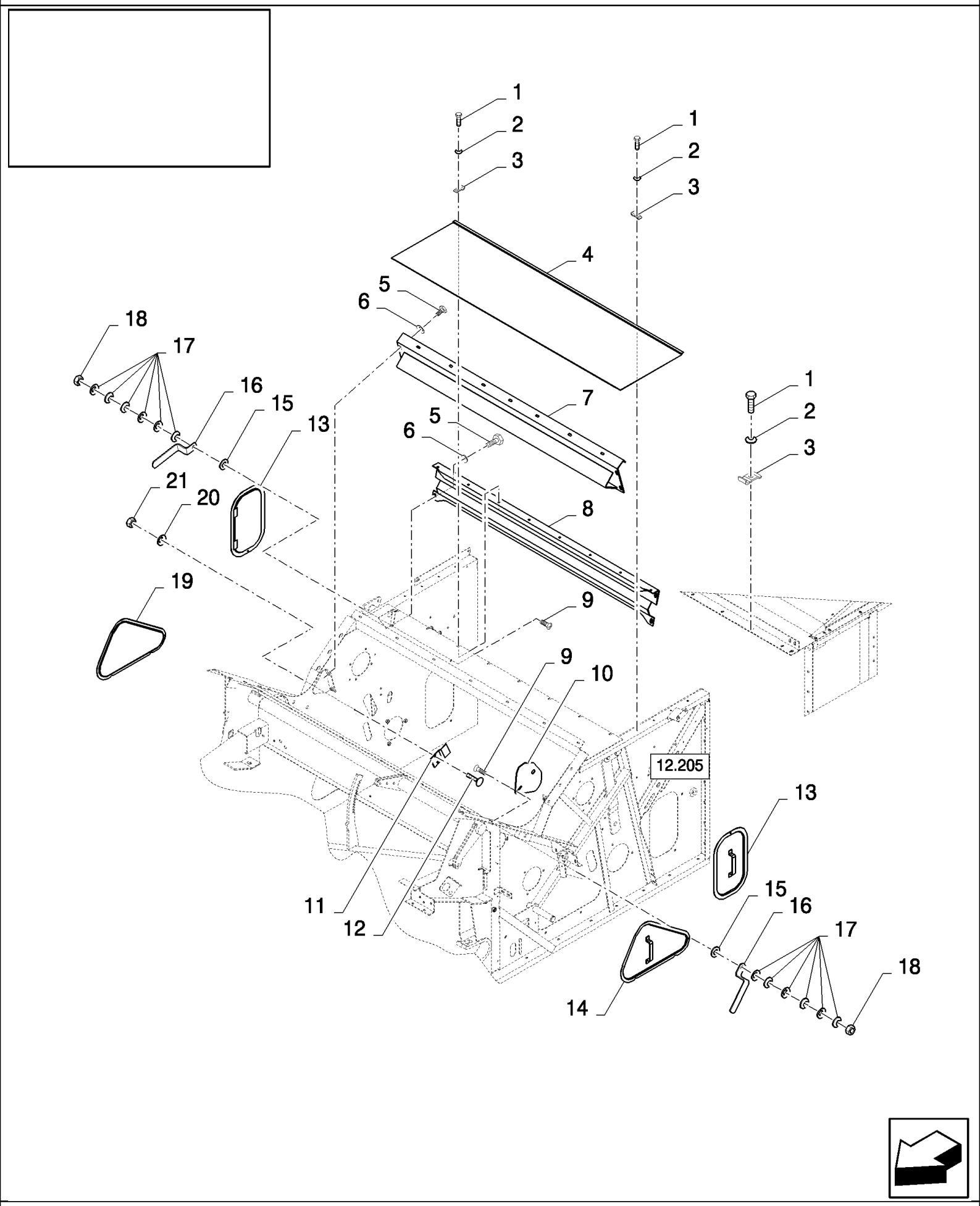

CS660 COMBINE BASE UNIT (1/03-) - Main Frame

12.206(01) FRAME, THRESHING

ссылка	Номер детали	Кол-во	Описание
1	43128	AR	BOLT, Hex, M8 x 30, 8.8,
2	322358	AR	WASHER, SPRING, Belleville, M8,
3	425093	AR	CLIP, {PP:80425093}
4	84432487	1	COVER, , FOR CS520, CS540 ONLY, FOR CL560 ONLY
4	84432488	1	COVER, , FOR CS640, CS660 ONLY
5	43138	AR	BOLT, Hex, M10 x 20, 8.8, Full Thd,
6	140045	AR	WASHER, SPRING, Belleville, M10,
7	84432433	1	PLATE, , FOR CS520, CS540 ONLY, FOR CL560 ONLY
7	84073577	1	PLATE, , FOR CS640, CS660 ONLY
8	84440208	1	PLATE, , FOR CS520, CS540 ONLY, FOR CL560 ONLY, WITHOUT ROTARY SEPARATOR
8	84440223	1	PLATE, , WITHOUT ROTARY SEPARATOR, FOR CS640 ONLY
8	84432396	1	PLATE, , FOR CS540 ONLY, WITH ROTARY SEPARATOR, BSN C427
8	84460682	1	PLATE, , WITH ROTARY SEPARATOR, FOR CS540 ONLY, ASN D428
8	84073238	1	PLATE, , WITH ROTARY SEPARATOR, FOR CS640, CS660 ONLY, BSN C427
8	84460679	1	PLATE, , FOR CS640, CS660 ONLY, WITH ROTARY SEPARATOR, ASN D428
9	308761	12	BOLT, CARRIAGE, Short NK, M8 x 25, Cl8.8, Full Thd,
10	84443839	1	PLATE, COVER,
11	84075668	1	BRACKET,
12	86512439	2	BOLT, CARRIAGE, Short NK, M6 x 16, Cl8.8, Full Thd,
13	84073215	2	COVER,
14	84073222	1	COVER,
15	378243	12	WASHER, M8,
16	84432243	12	CLIP,
17	300367	72	WASHER, 8MM
18	86629542	12	NUT, LOCK, M8 x 1.25, Cl 8,
19	84073225	1	COVER,
20	322357	2	WASHER, SPRING, Belleville, M6,
21	15896221	2	NUT, M6, Cl 10,

12.207(01) PIVOTING RESTRICTIONS FOR STEERING VALVE

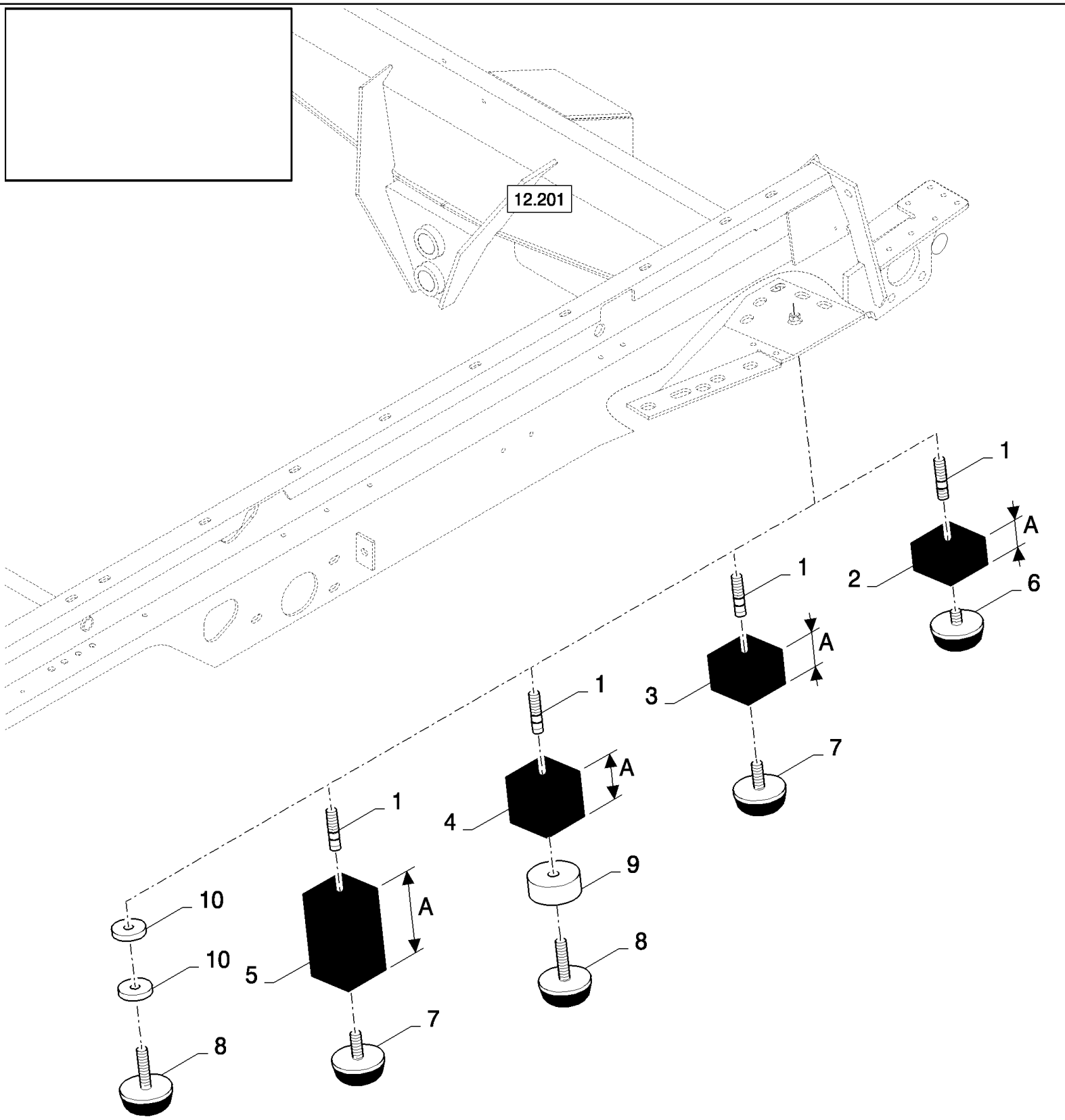

CS660 COMBINE BASE UNIT (1/03-) - Main Frame

12.207(01) PIVOTING RESTRICTIONS FOR STEERING VALVE

ссылка	Номер детали	Кол-во	Описание
1	412593	2	BOLT, {PP:80412593}
2	84807909	2	BLOCK, A=31MM
3	84026231	2	BLOCK, A=40MM
4	916866	2	SPACER, {PP:80916866} A=50MM
5	417299	2	STOP, {PP:80417299} A=90MM
6	84062673	2	INSULATOR BLOCK,
7	190029	2	INSULATOR BLOCK, {PP:80190029}
8	84440416	2	INSULATOR BLOCK,
9	84018917	2	SLEEVE,
10	140083	4	WASHER, {PP:80140083}

STRAW ELEVATOR	**ELEVATEUR DE PAILLE**	**ELEVADOR DE PAJA**	**HALMELEVATOR**
CANALE ELEVATORE PAGLIA	**STROHFÖRDERER**	**ELEVADOR DE PALHA**	**STRO-ELEVATOR**

SEC. 13

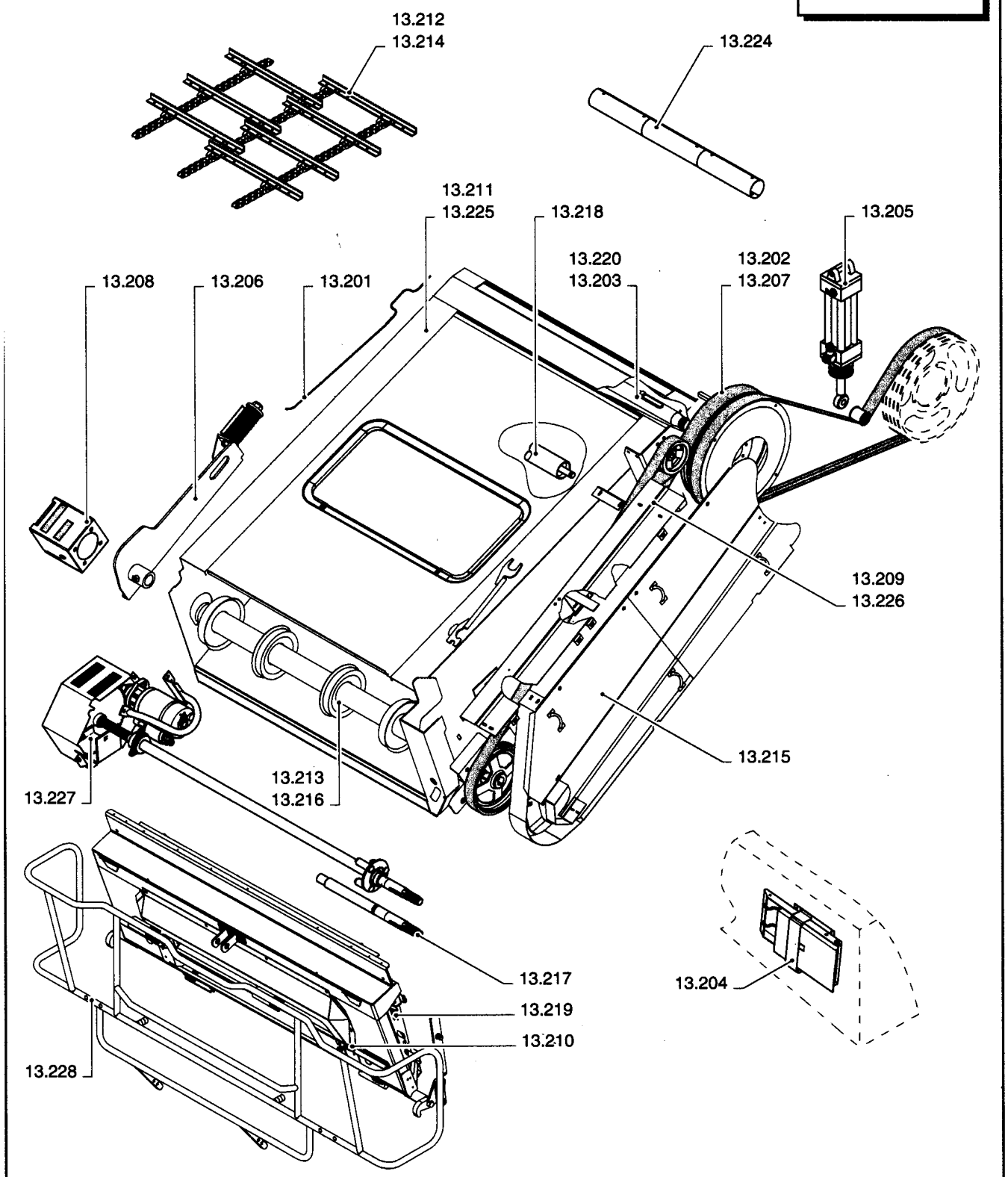

ссылка	Номер детали	Кол-во	Описание

13.201(01) STRAW ELEVATOR, UPPER SHAFT GREASING

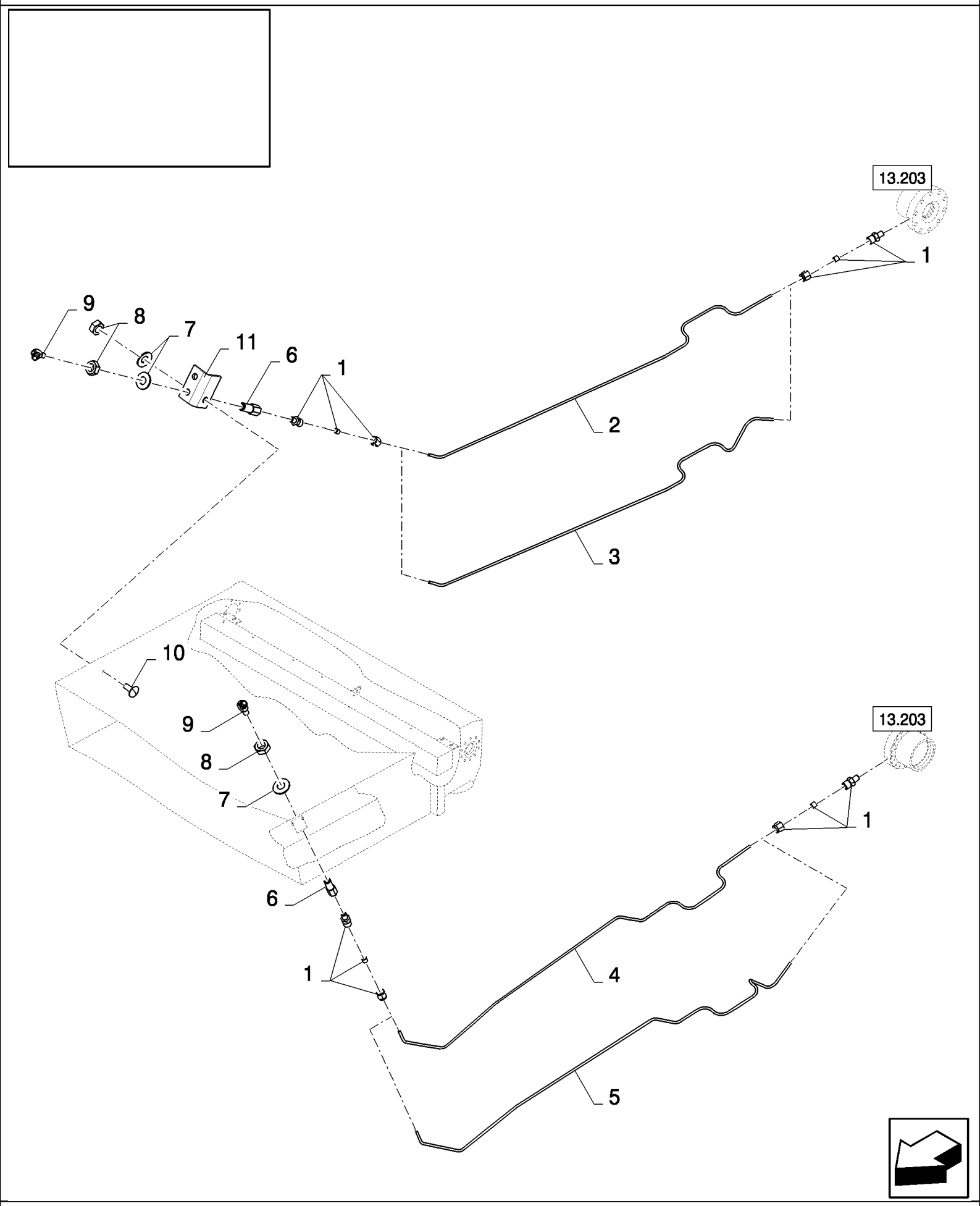

CS660 COMBINE BASE UNIT (1/03-) - Straw Elevator

13.201(01) STRAW ELEVATOR, UPPER SHAFT GREASING

ссылка	Номер детали	Кол-во	Описание
1	159338	8	CONNECTOR, HYD., {PP:80159338}
2	84981445	1	TUBE, RH
3	84980299	1	TUBE, RH
4	84980298	1	TUBE, LH
5	84981446	1	TUBE, LH
6	84981173	4	CONNECTOR, HYD.,
7	140045	5	WASHER, SPRING, Belleville, M10,
8	100016	5	NUT, M10, Cl 8,
9	323787	5	NIPPLE, LUBE, {PP:80323787} , BSN C301
9	84814929	5	NIPPLE, LUBE, , ASN D302
10	86512424	1	BOLT, CARRIAGE, Short NK, M10 x 30, Cl8.8, Full Thd, M10x30
11	84980305	1	SUPPORT,

13.202(01) STRAW ELEVATOR, UPPER SHAFT DRIVE

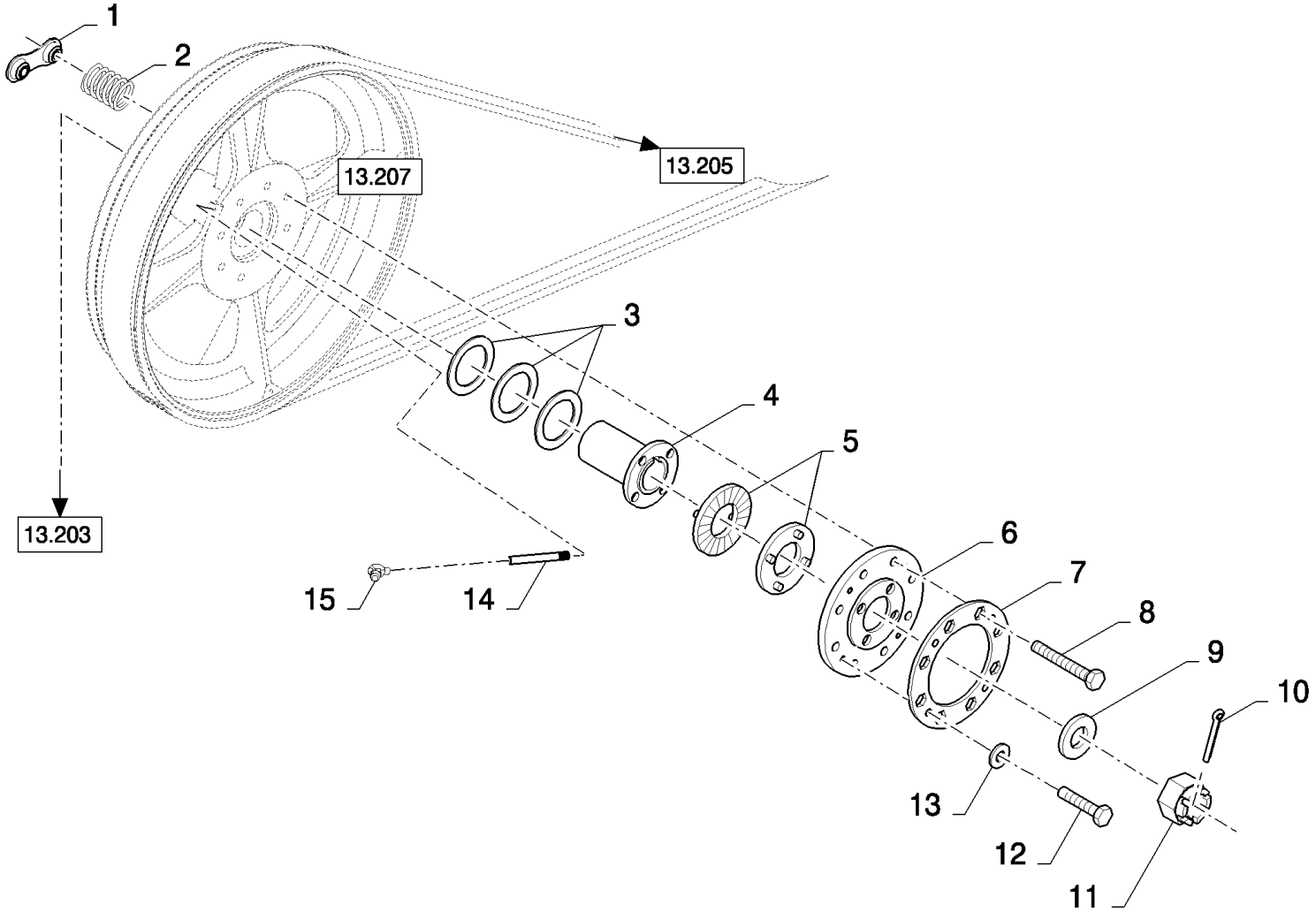

CS660 COMBINE BASE UNIT (1/03-) - Straw Elevator

13.202(01) STRAW ELEVATOR, UPPER SHAFT DRIVE

ссылка	Номер детали	Кол-во	Описание
1	84071664	4	PLATE, FIXING,
2	84073712	8	SPRING,
3	84036681	3	WASHER, 60MM
4	84058258	1	BUSHING,
5	362801	2	CLUTCH, {PP:80362801}
6	84069812	1	DISC,
7	84071421	1	PLATE, LOCKING,
8	86508622	8	BOLT, Hex, M12 x 100, 10.9, M12x100
9	84073585	1	WASHER,
10	130012	1	PIN, SPLIT (COTTER), {PP:80130012} M5 x 50,
11	309090	1	NUT, SLOTTED, {PP:80309090} M24 x 1.5, Cl 8, M24x1.5
13	322358	4	WASHER, SPRING, Belleville, M8,
14	89818440	1	TUBE, , BSN C323
14	84447295	1	TUBE, , ASN D324
15	323787	1	NIPPLE, LUBE, {PP:80323787}
12	16043224	4	BOLT, Hex, M8 x 16, 8.8, Full Thd,

13.203(01) STRAW ELEVATOR, UPPER SHAFT

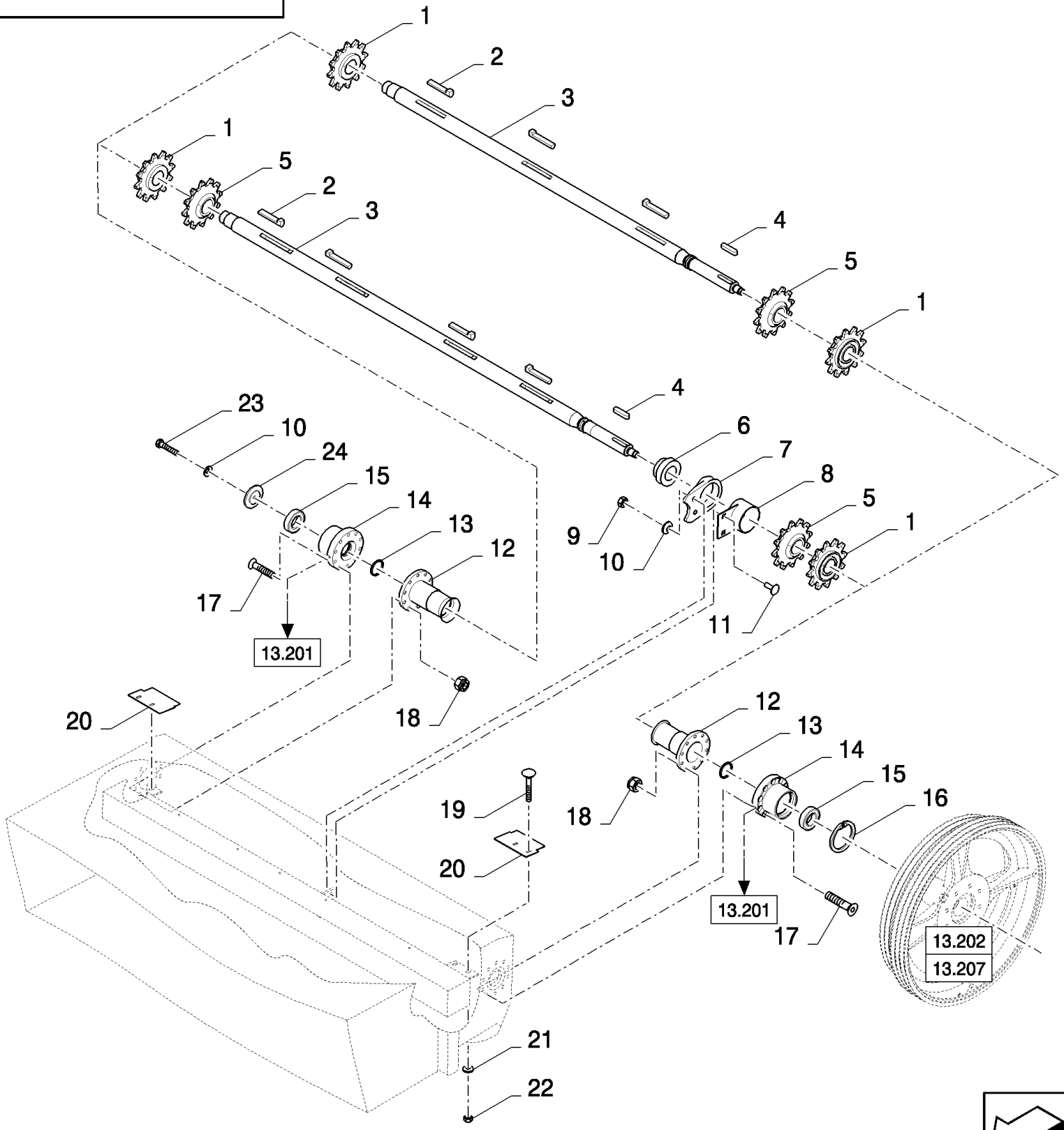

CS660 COMBINE BASE UNIT (1/03-) - Straw Elevator

13.203(01) STRAW ELEVATOR, UPPER SHAFT

ссылка	Номер детали	Кол-во	Описание
1	84072022	2	SPROCKET, DRIVEN,
2	412241	AR	KEY, {PP:80412241}
3	84980839	1	SHAFT, , FOR CS520, CS540 ONLY
3	84991232	1	SHAFT, , FOR CS640, CS660 ONLY
4	320607	1	KEY, {PP:80320607}
5	84072029	AR	SPROCKET, DRIVEN,
6	754393	1	BEARING ASSY, {PP:80754393} , FOR CS640, CS660 ONLY
7	751779	1	HOUSING, BEARING, {PP:80751779} , FOR CS640, CS660 ONLY
8	84073592	1	COVER, , FOR CS640, CS660 ONLY
9	9706685	2	NUT, M12, Cl 8, , FOR CS640, CS660 ONLY
10	140046	AR	WASHER, SPRING, Belleville, M12,
11	328430	2	BOLT, CARRIAGE, {PP:80328430} Short NK, M12 x 35, Cl8.8, Full Thd, M12x35, FOR CS640, CS660 ONLY
12	84073706	2	SHIELD, , FOR CS520, CS540 ONLY
12	84073705	2	SHIELD, , FOR CS640, CS660 ONLY
13	220012	2	RING, {PP:80220012} 45MM
14	84435013	2	HOUSING, BEARING,
15	323327	2	BEARING ASSY, {PP:80323327}
16	80300633	1	RING, SNAP,
17	84334564	20	SCREW, Hex Soc Flat Hd, M10 x 40, 12.9, M10x40
18	100037	20	NUT, M10 x 1.5, Cl 8,
19	86507486	4	BOLT, CARRIAGE, Short NK, M8 x 20, Cl8.8, Full Thd,
20	84073737	2	PLATE, , FOR CS520, CS540 ONLY
20	84073735	2	PLATE, , FOR CS640, CS660 ONLY
21	412650	4	WASHER, SPRING, Belleville, M8,
22	89706690	4	NUT, M8, Cl 8,
23	9706687	1	BOLT, Hex, M12 x 30, 8.8,
24	84053190	1	COVER,

13.204(01) CHOCK

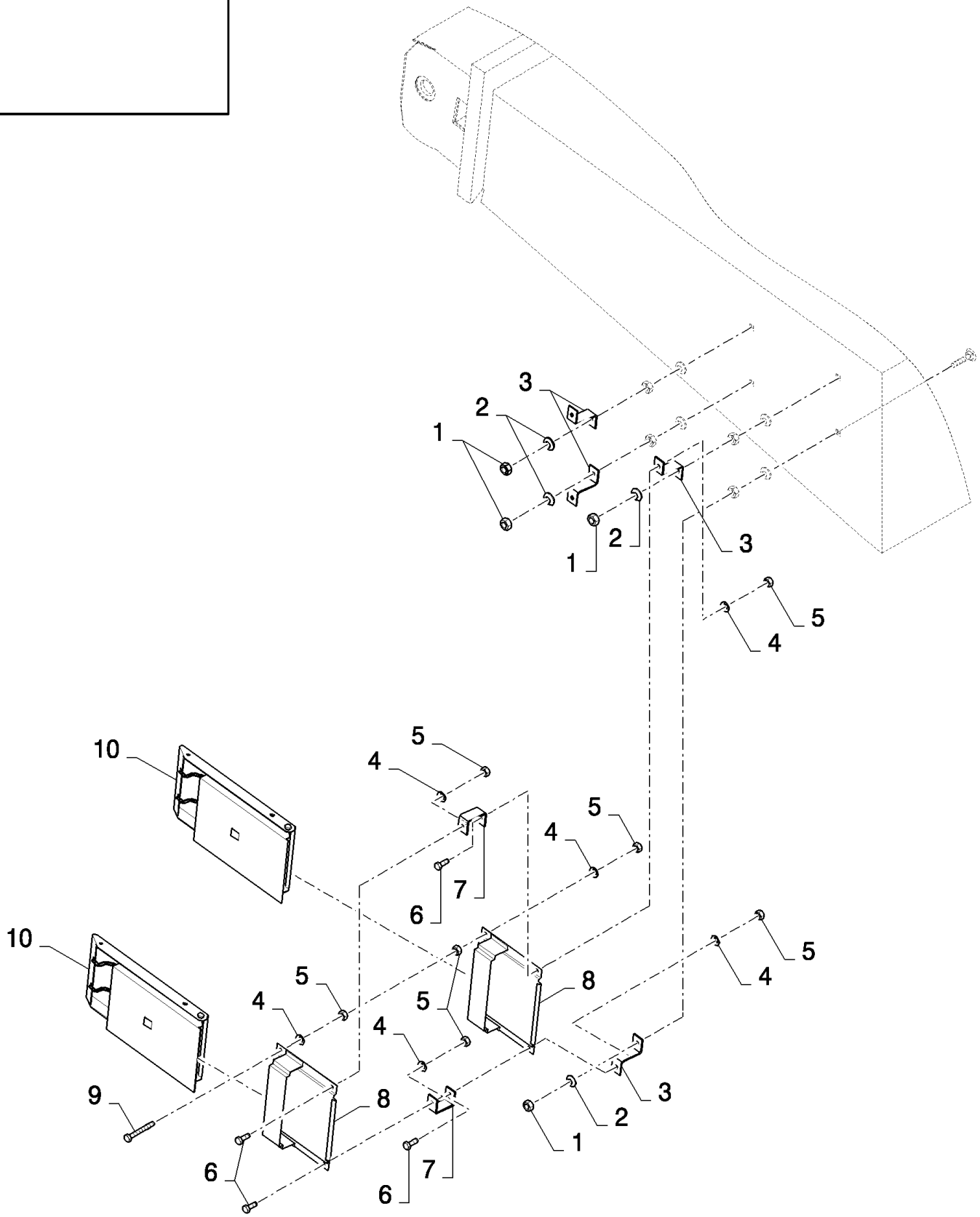

CS660 COMBINE BASE UNIT (1/03-) - Straw Elevator

13.204(01) CHOCK

ссылка	Номер детали	Кол-во	Описание
1	322358	4	WASHER, SPRING, Belleville, M8,
2	89706690	4	NUT, M8, Cl 8,
3	84018278	4	SUPPORT,
4	140045	8	WASHER, SPRING, Belleville, M10,
5	100016	10	NUT, M10, Cl 8,
6	43139	4	SCREW, {PP:80043139} M10x25
7	87011442	2	SUPPORT,
8	452770	2	CLAMP, {PP:80452770}
9	538885	2	BOLT, {PP:80538885} Hex, M10 x 90, 8.8, Full Thd, M10x90
10	452769	2	WHEEL CHOCK, {PP:80452769}

13.205(01) HEADER DRIVE ENGAGING IDLER

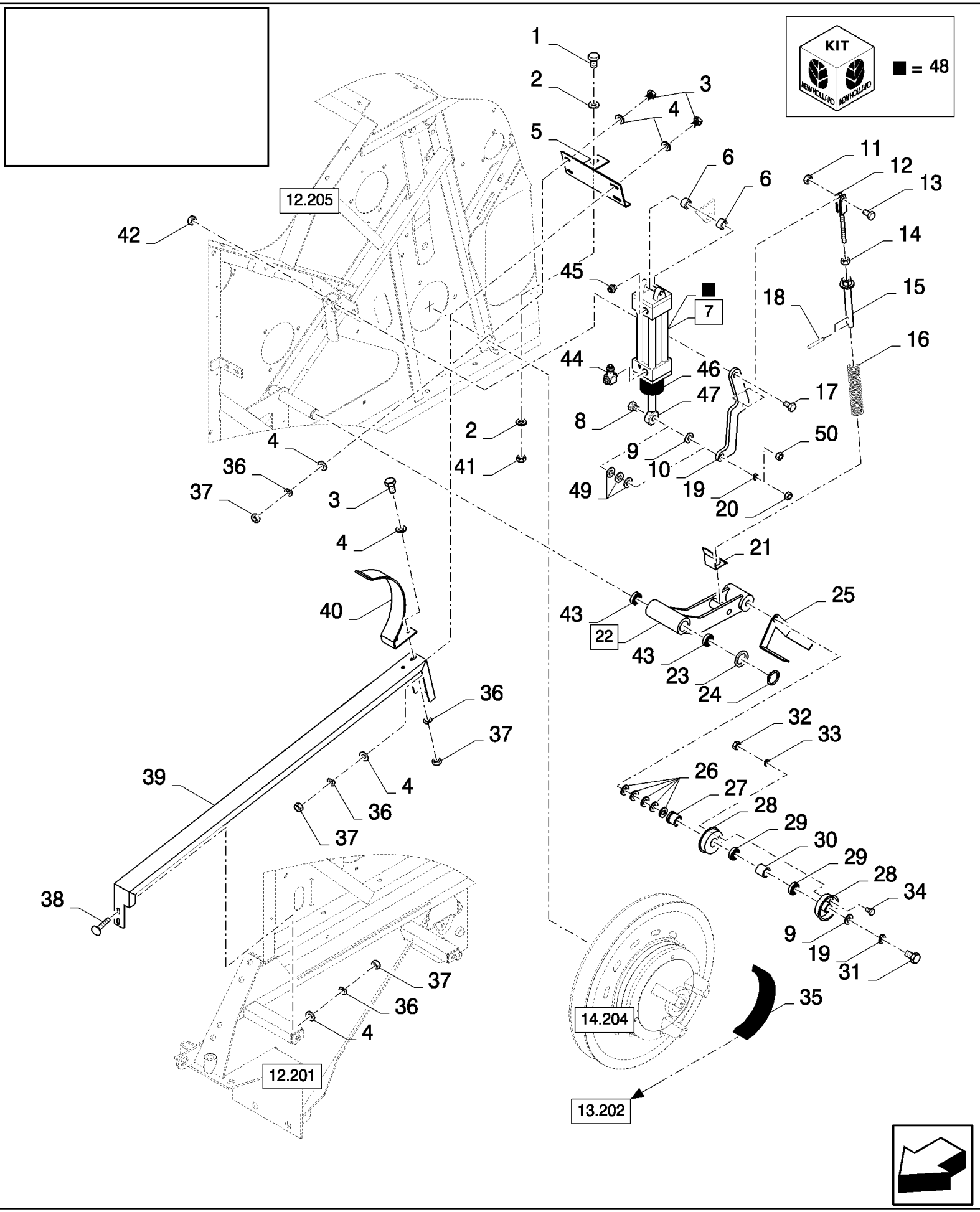

CS660 COMBINE BASE UNIT (1/03-) - Straw Elevator

13.205(01) HEADER DRIVE ENGAGING IDLER

ссылка	Номер детали	Кол-во	Описание
1	43140	1	BOLT, Hex, M10 x 30, 8.8, Full Thd,
2	140045	2	WASHER, SPRING, Belleville, M10,
3	120104	6	BOLT, Hex, M8 x 20, 8.8,
4	378243	12	WASHER, M8,
5	84072926	1	SUPPORT,
6	84021736	2	SLEEVE, , FOR CS540, CS640, CS660 ONLY, FOR 3HB ONLY
6	84446770	2	BUSHING, , FOR CL560 ONLY, FOR 2HB ONLY
7	84432515	1	CYLINDER, (44 to 48), FOR 3HB ONLY
7	84446523	1	CYLINDER, (44 to 48), FOR CL560 ONLY, FOR 2HB ONLY
8	120091	1	BOLT, Hex, M16 x 60, 8.8, , FOR CS540, CS640, CS660 ONLY, FOR 3HB ONLY
8	9706702	1	BOLT, Hex, M12 x 50, 8.8, , FOR CL560 ONLY, FOR 2HB ONLY
9	140093	AR	WASHER, {PP:80140093} 17MM
10	84077727	1	LEVER, , FOR CS540, CS640, CS660 ONLY, FOR 3HB ONLY
10	84446759	2	LEVER, , FOR CL560 ONLY, FOR 2HB ONLY
11	100037	1	NUT, M10 x 1.5, Cl 8,
12	84072638	1	YOKE,
13	325829	1	BOLT, {PP:80325829} Hex, M10 x 45, 8.8, M10x45
14	9706685	AR	NUT, M12, Cl 8,
15	84446689	1	REGULATOR,
16	84446705	1	SPRING, , FOR CS540, CS640, CS660 ONLY, FOR 3HB ONLY
16	84446704	1	SPRING, , FOR CL560 ONLY, FOR 2HB ONLY
17	120092	1	BOLT, Hex, M16 x 70, 8.8,
18	300868	2	PIN, LOCK, {PP:80300868} M6 x 36, Slotted, , BSN C423
18	300872	2	PIN, LOCK, {PP:80300872} M8 x 36, Slotted, , ASN D424
19	140048	AR	WASHER, SPRING, Belleville, M16,
20	100020	1	NUT, M16, Cl 8, , FOR CL560 ONLY
21	84446619	1	INDICATOR,
22	84446614	1	LEVER, (43)
23	140108	1	WASHER, {PP:80140108} 31MM
24	370003	1	RING, SNAP, {PP:80370003} M30, Ext,
25	84989939	1	SUPPORT, , BSN C415
25	84983455	1	PLATE, , ASN D416
26	140090	AR	WASHER, 17MM
27	427248	1	BUSHING,
28	84441735	2	HALF-PULLEY,
29	443898	2	BEARING, BALL,
30	430235	1	BUSHING,
31	43874	1	BOLT, Hex, M16 x 110, 8.8,
32	15896221	3	NUT, M6, Cl 10,
33	322357	3	WASHER, SPRING, Belleville, M6,
34	86508568	3	BOLT, Hex, M6 x 16, 8.8,
35	89817374	1	BELT, TRANSMISSION, , FOR CS540, CS640, CS660 ONLY, FOR 3HB ONLY
35	84446792	1	BELT, TRANSMISSION, , FOR 2HB ONLY
35	84464057	1	BELT, TRANSMISSION, , FOR 2HB ONLY, FOR CL560 ONLY
36	322358	8	WASHER, SPRING, Belleville, M8,

13.205(01) HEADER DRIVE ENGAGING IDLER

ссылка	Номер детали	Кол-во	Описание
37	89706690	8	NUT, M8, Cl 8,
38	86507486	2	BOLT, CARRIAGE, Short NK, M8 x 20, Cl8.8, Full Thd,
39	84072929	1	GUIDE,
40	84989940	1	GUIDE,
41	100016	1	NUT, M10, Cl 8,
42	86000441	1	NUT, LOCK, M16 x 2, Cl 8,
43	420434	2	BUSHING,
44	84446528	1	CONNECTOR, HYD.,
45	84446527	2	CONNECTOR, HYD.,
46	84446535	1	BELLOWS, , FOR CL560 ONLY, FOR 2HB ONLY
46	84446509	1	BELLOWS, , FOR 3HB ONLY
47	84446534	1	BALL JOINT, , FOR CL560 ONLY, FOR 2HB ONLY
47	84446511	1	BALL JOINT, , FOR 3HB ONLY
48	84446536	1	KIT, SEALS, , FOR CL560 ONLY, FOR 2HB ONLY
48	84446514	1	KIT, SEALS, , FOR 3HB ONLY
49	86511324	3	WASHER, M12 x 24 x 2.5, , FOR CL560 ONLY, FOR 2HB ONLY
50	9706685	1	NUT, M12, Cl 8, , FOR 2HB ONLY, FOR CL560 ONLY
51	140046	1	WASHER, SPRING, Belleville, M12, , FOR CL560 ONLY, FOR 2HB ONLY

13.206(01) SUSPENSION BRACES, FIXED

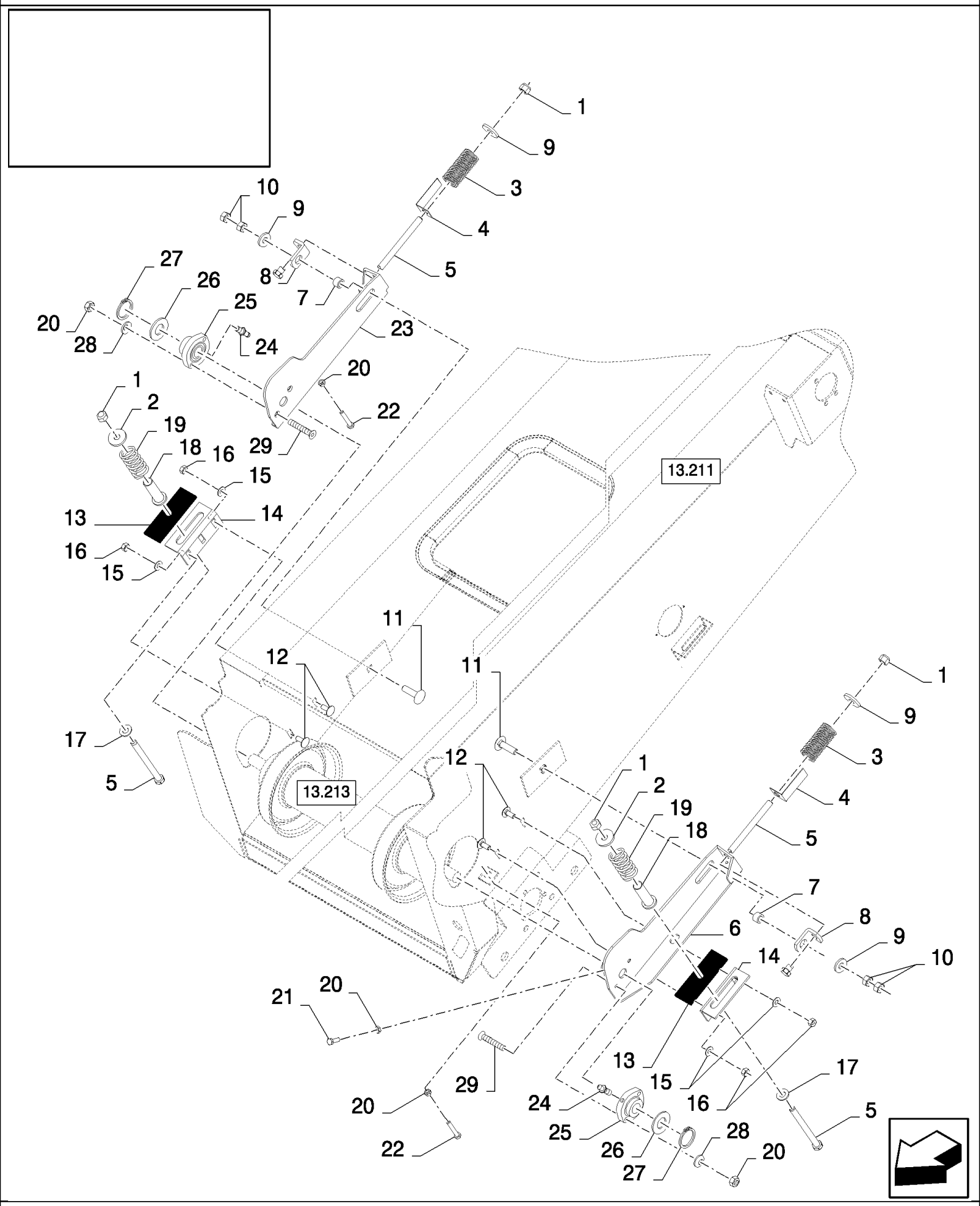

CS660 COMBINE BASE UNIT (1/03-) - Straw Elevator

13.206(01) SUSPENSION BRACES, FIXED

ссылка	Номер детали	Кол-во	Описание
1	412066	4	NUT, LOCK, {PP:80412066} M16 x 2, Cl 8, M16
2	451743	2	WASHER, {PP:80451743} 16.5MM
3	920487	2	SPRING, {PP:80920487}
4	84981494	2	INDICATOR,
5	86508585	4	BOLT, Hex, M16 x 190, 8.8, M16x190
6	84980722	1	SUPPORT, LH, BSN C427
6	84457756	1	ARM, LH, ASN D428
7	84052730	2	BUSHING,
8	84075539	2	BRACKET,
9	325594	4	WASHER, 17MM
10	100020	4	NUT, M16, Cl 8,
11	120046	2	BOLT, CARRIAGE, Short NK, M16 x 60, Cl8.8, Full Thd,
12	120044	4	BOLT, CARRIAGE, Short NK, M12 x 30, Cl8.8, Full Thd,
13	9815111	2	CANVAS,
14	9815110	2	SUPPORT,
15	140046	4	WASHER, SPRING, Belleville, M12,
16	9706685	4	NUT, M12, Cl 8,
17	378246	2	WASHER, 16MM, BSN C301
17	325594	2	WASHER, , ASN D302
18	921084	2	TUBE, , BSN C301
18	84982624	2	BUSHING, , ASN D302
19	920397	2	SPRING,
20	100016	4	NUT, M10, Cl 8,
21	43140	2	BOLT, Hex, M10 x 30, 8.8, Full Thd, , BSN C427
22	120115	2	SCREW, Hex, M10 x 70, 8.8, Full Thd,
23	84980724	1	SUPPORT, RH, BSN C427
23	84457755	1	ARM, RH, ASN D428
24	84022088	2	NIPPLE, LUBE, , ASN D428
25	84078927	2	BEARING ASSY, , ASN D428
26	441176	4	WASHER, , ASN D428
27	370003	2	RING, SNAP, M30, Ext, , ASN D428
28	140045	4	WASHER, SPRING, Belleville, M10, , ASN D428
29	120259	4	SCREW, Hex Soc Flat Hd, M10 x 40, 8.8, , ASN D428

13.207(01) STRAW ELEVATOR DRIVE 3HB AND 2HB

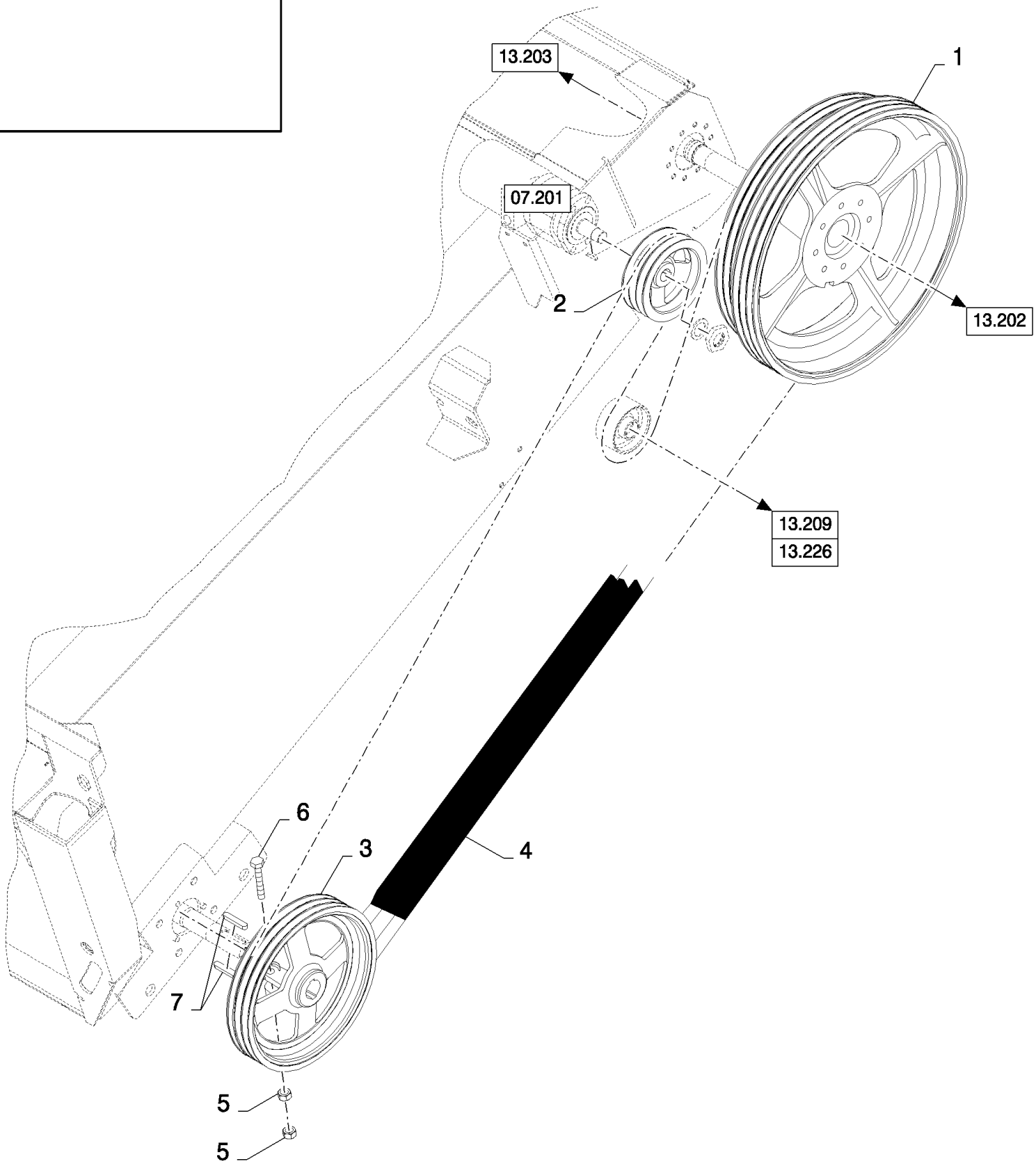

CS660 COMBINE BASE UNIT (1/03-) - Straw Elevator

13.207(01) STRAW ELEVATOR DRIVE 3HB AND 2HB

ссылка	Номер детали	Кол-во	Описание
1	84981563	1	PULLEY, , FOR 2HB ONLY
1	84980479	1	PULLEY, , FOR 3HB ONLY
2	84981404	1	PULLEY, , FOR 2HB ONLY
2	84980478	1	PULLEY, , FOR 3HB ONLY
3	84982392	1	PULLEY, , FOR 2HB ONLY
3	84980424	1	PULLEY, , FOR 3HB ONLY
4	84981586	1	BELT, TRANSMISSION, , FOR CS540, CS640, CS660 ONLY, FOR 2HB ONLY
4	84991234	1	BELT, TRANSMISSION, , FOR 3HB ONLY
4	84982278	1	BELT, TRANSMISSION, , FOR 2HB ONLY, FOR CS520 ONLY
5	100020	2	NUT, M16, Cl 8,
6	350616	1	BOLT, Hex, M16 x 90, 8.8,
7	323190	1	KEY, {PP:80323190} , FOR 2HB ONLY
7	320607	2	KEY, {PP:80320607} , FOR 3HB ONLY

13.208(01) LOWER SHAFT, 3HB

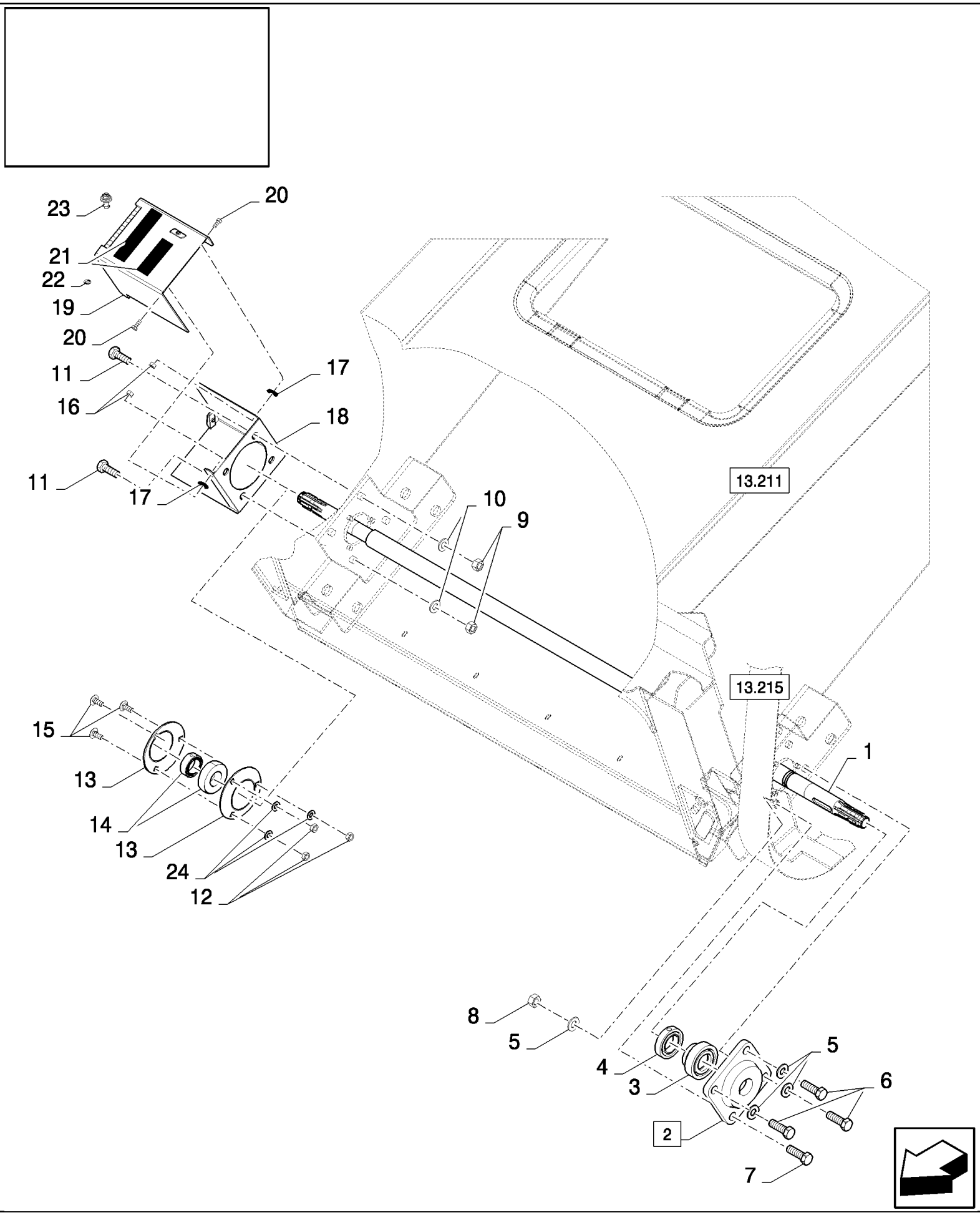

CS660 COMBINE BASE UNIT (1/03-) - Straw Elevator

13.208(01) LOWER SHAFT, 3HB

ссылка	Номер детали	Кол-во	Описание
1	84981300	1	SHAFT, , FOR CS540 ONLY
1	84980405	1	SHAFT, , FOR CS640, CS660 ONLY
2	89814384	1	BEARING ASSY, (3,4)
3	NSS	1	NOT SERVICED SEPARATELY,
4	563733	1	COLLAR, {PP:80563733}
5	140048	4	WASHER, SPRING, Belleville, M16,
6	120090	3	BOLT, Hex, M16 x 50, 8.8,
7	120091	1	BOLT, Hex, M16 x 60, 8.8,
8	100020	1	NUT, M16, Cl 8,
9	9706685	4	NUT, M12, Cl 8,
10	140046	4	WASHER, SPRING, Belleville, M12,
11	9706687	4	BOLT, Hex, M12 x 30, 8.8,
12	100016	3	NUT, M10, Cl 8,
13	36403	2	FLANGE, {PP:80036403}
14	322360	1	BEARING, BALL, {PP:80322360}
15	338949	3	BOLT, CARRIAGE, Short NK, M10 x 25, Cl8.8, Full Thd,
16	412152	2	NUT, LOCK, M6 x 1, Cl 8.8,
17	140016	2	WASHER, M8 x 16 x 1.6,
18	84981803	1	SHIELD,
19	84981804	1	SHIELD,
20	86508568	2	BOLT, Hex, M6 x 16, 8.8,
21	401502	1	STRIP, ANTI-SKID, {PP:80401502} 51mm x 18.3 Roll - Cut to Size
22	9514605	1	RING, LOCKING, {PP:89514605}
23	89514603	1	LOCK,
24	140045	3	WASHER, SPRING, Belleville, M10,

13.209(01) STRAW ELEVATOR DRIVE 3HB AND 2HB, IDLER

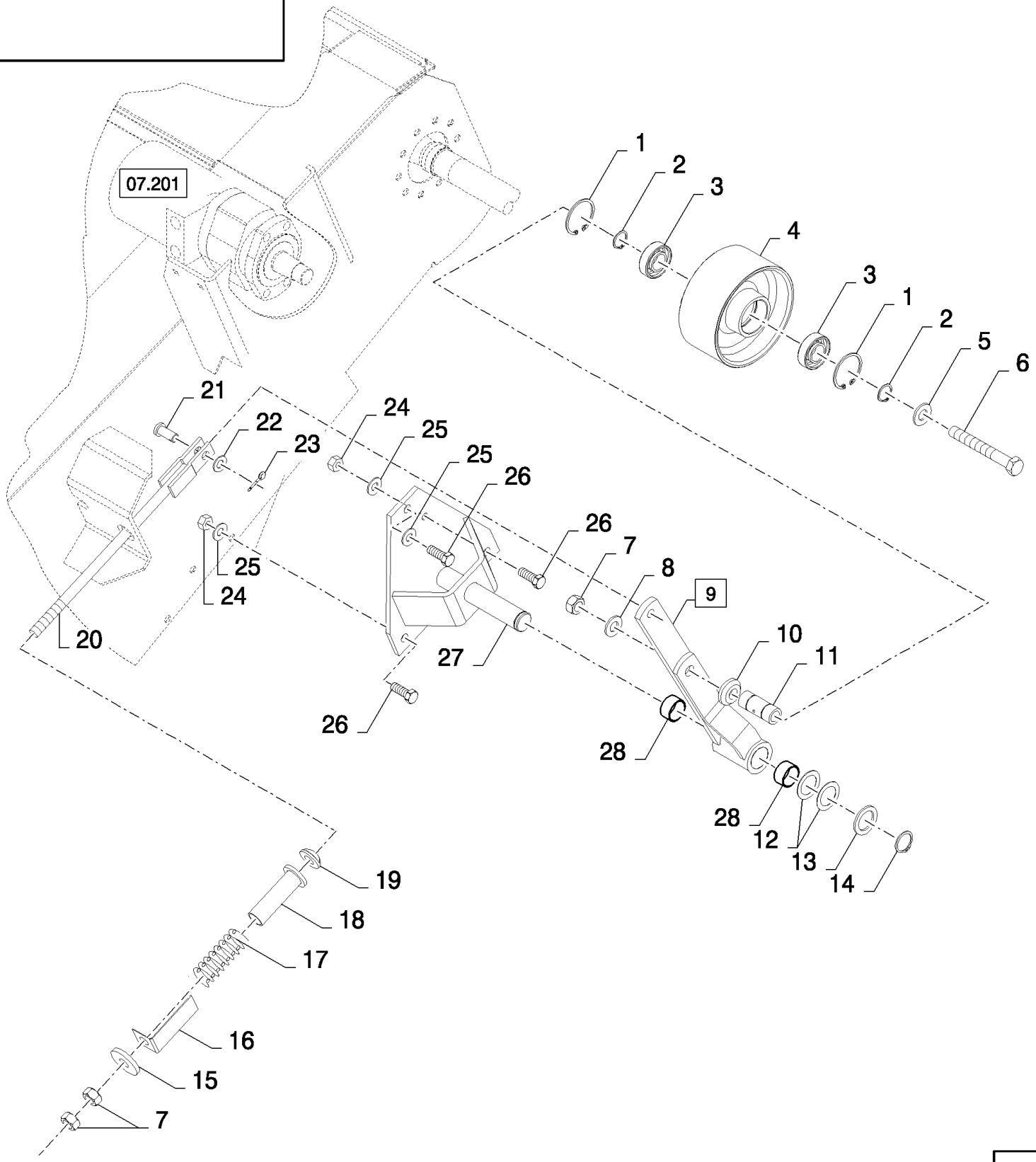

CS660 COMBINE BASE UNIT (1/03-) - Straw Elevator

13.209(01) STRAW ELEVATOR DRIVE 3HB AND 2HB, IDLER

ссылка	Номер детали	Кол-во	Описание
1	370011	2	RING, SNAP, {PP:80370011} M52, Int,
2	370002	2	RING, SNAP, {PP:80370002} M25, Ext,
3	443898	2	BEARING, BALL, {PP:80443898}
4	84980775	1	WHEEL, IDLER,
5	378246	1	WASHER, {PP:80378246} 16MM
6	321246	1	BOLT, Hex, M16 x 120, 8.8,
7	100020	3	NUT, M16, Cl 8,
8	140048	1	WASHER, SPRING, Belleville, M16,
9	84980710	1	ARM, (28)
10	84980619	1	BUSHING,
11	84980609	1	BUSHING,
12	441176	2	WASHER, {PP:80441176} 31MM
13	84814901	1	WASHER,
14	370003	1	RING, SNAP, {PP:80370003} M30, Ext,
15	84005115	1	WASHER, 17MM
16	84981593	1	INDICATOR, , FOR 2HB ONLY
16	84981584	1	INDICATOR, , FOR 3HB ONLY
17	359641	1	SPRING, {PP:80359641}
18	84981585	1	TUBE,
19	450869	1	WASHER, {PP:80450869}
20	84981179	1	ROD,
21	412209	1	PIN, CLEVIS, {PP:80412209} M12 x 30,
22	140223	1	WASHER, {PP:80140223} 13MM
23	130004	1	PIN, SPLIT (COTTER), {PP:80130004} M3.2 x 25,
24	9706685	2	NUT, M12, Cl 8,
25	140046	3	WASHER, SPRING, Belleville, M12,
26	86629541	3	BOLT, Hex, M12 x 40, 8.8, Full Thd,
27	84980730	1	SUPPORT,
28	420410	2	BUSHING, {PP:80420410}

13.210(01) BALANCE FRAME STRAW ELEVATOR

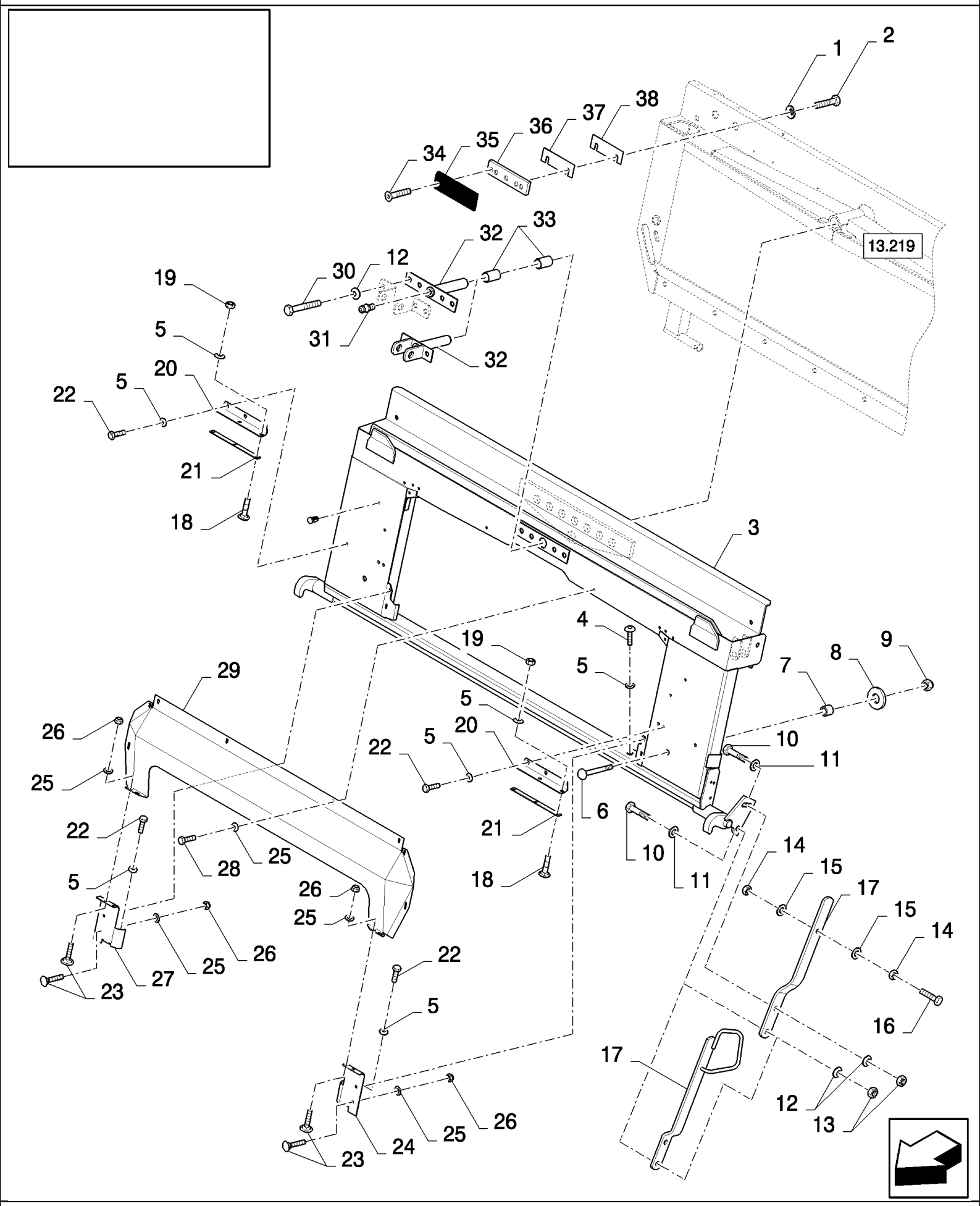

CS660 COMBINE BASE UNIT (1/03-) - Straw Elevator

13.210(01) BALANCE FRAME STRAW ELEVATOR

ссылка	Номер детали	Кол-во	Описание
1	140045	4	WASHER, SPRING, Belleville, M10,
2	43139	4	SCREW, {PP:80043139} M10x25
3	84334954	1	FRAME, , FOR CS520, CS540 ONLY
3	84334953	1	FRAME, , FOR CS640, CS660 ONLY
4	86512788	2	SCREW, M8x30
5	322358	12	WASHER, SPRING, Belleville, M8,
6	300663	2	BOLT, CARRIAGE, {PP:80300663} Short NK, M16 x 120, Cl8.8, M16x120
7	84071496	2	BUSHING,
8	913347	2	WASHER, {PP:80913347} 17MM
9	412066	2	NUT, LOCK, {PP:80412066} M16 x 2, Cl 8, M16
10	43168	2	BOLT, Hex, M16 x 40, 8.8,
11	378246	2	WASHER, {PP:80378246} 16MM
12	140048	4	WASHER, SPRING, Belleville, M16,
13	100020	2	NUT, M16, Cl 8,
14	323238	2	NUT, {PP:80323238} Thin, M12 x 1.75, Cl 05, M12, BSN C375
15	140046	2	WASHER, SPRING, Belleville, M12, , BSN C375
16	86629541	1	BOLT, Hex, M12 x 40, 8.8, Full Thd, , BSN C375
17	84069821	1	LEVER, , BSN C375
17	87025578	1	LEVER, , ASN D376
18	86507486	4	BOLT, CARRIAGE, Short NK, M8 x 20, Cl8.8, Full Thd,
19	89706690	4	NUT, M8, Cl 8,
20	84069753	2	ANGLE, , FOR CS520, CS540 ONLY
20	84439654	2	ANGLE, , FOR CS640, CS660 ONLY
21	84437512	2	PLATE, , FOR CS520, CS540 ONLY
21	84437508	2	PLATE, , FOR CS640, CS660 ONLY
22	120104	6	BOLT, Hex, M8 x 20, 8.8,
23	86512439	8	BOLT, CARRIAGE, Short NK, M6 x 16, Cl8.8, Full Thd,
24	9500852	1	PLATE, SKID, {PP:89500852}
25	412649	16	WASHER, SPRING, Belleville, M6,
26	353308	8	NUT, LOCK, M6 x 1, Cl 8,
27	9500851	1	PLATE, SKID, {PP:89500851}
28	120100	8	BOLT, Hex, M6 x 20, 8.8,
29	84071456	1	PLATE, , FOR CS520, CS540 ONLY
29	84071457	1	PLATE, , FOR CS640, CS660 ONLY
30	385922	2	BOLT, {PP:80385922} Hex, M16 x 45, 8.8, Hex, M16 x 45, 8.8
31	321204	1	NIPPLE, LUBE, {PP:80321204} M6 x 1, 16mm lg,
32	84439449	1	PIN, , BSN C375
32	84454379	1	PIN, , ASN D376
33	412365	2	SLEEVE, {PP:80412365}
34	393698	6	SCREW, {PP:80393698} Hex Soc Flat Hd, M10 x 25, 8.8, M10x25
35	84045488	2	GASKET,
36	84989344	2	PLATE,
37	84989342	2	PLATE, ADJUSTING,
38	84989343	2	PLATE, ADJUSTING,

13.211(01) FEEDER FRAME

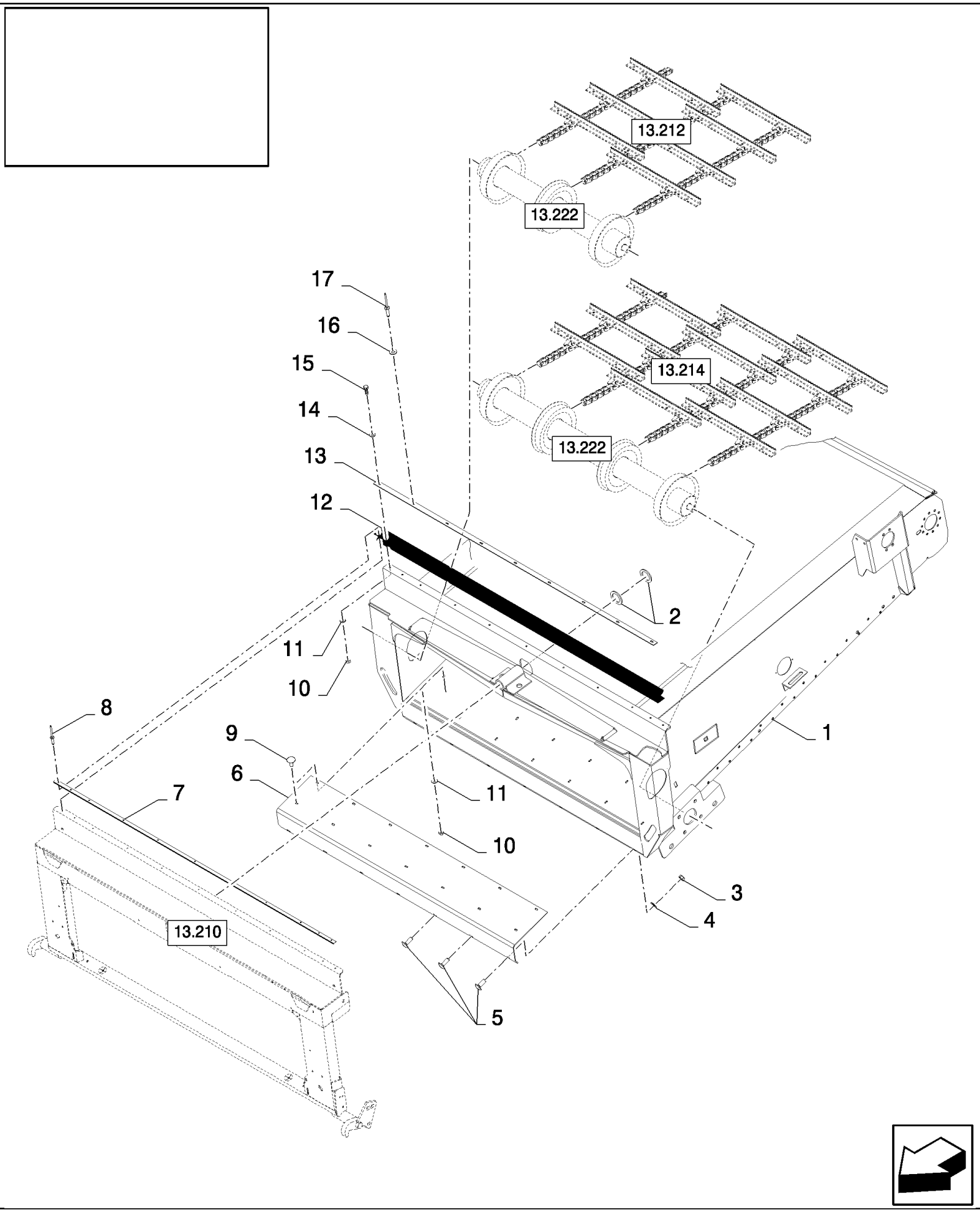

CS660 COMBINE BASE UNIT (1/03-) - Straw Elevator

13.211(01) FEEDER FRAME

ссылка	Номер детали	Кол-во	Описание
1	84981288	1	STRAW ELEVATOR, , FOR CS520, CS540 ONLY
1	84981290	1	STRAW ELEVATOR, , FOR CS640, CS660 ONLY
2	84018313	2	WASHER, 35MM
3	89706690	AR	NUT, M8, Cl 8,
4	322358	AR	WASHER, SPRING, Belleville, M8,
5	86507486	AR	BOLT, CARRIAGE, Short NK, M8 x 20, Cl8.8, Full Thd,
6	84981268	1	PLATE, , FOR CS520, CS540 ONLY
6	84981304	1	PLATE, , FOR CS640, CS660 ONLY
7	84071233	1	PLATE, FIXING, , BSN C415
8	80445395	AR	RIVET, , BSN C415
9	86512439	AR	BOLT, CARRIAGE, Short NK, M6 x 16, Cl8.8, Full Thd,
10	15896221	AR	NUT, M6, Cl 10,
11	322357	AR	WASHER, SPRING, Belleville, M6,
12	84981391	1	CANVAS, , FOR CS520, CS540 ONLY, BSN C415
12	84442672	1	CANVAS, , FOR CS520, CS540 ONLY, ASN D416
12	84981390	1	CANVAS, , FOR CS640, CS660 ONLY, BSN C415
12	84443712	1	CANVAS, , FOR CS640, CS660 ONLY, ASN D416
13	84981455	1	PLATE, FIXING, , FOR CS520, CS540 ONLY, BSN C415
13	89593163	1	PLATE, FIXING, , FOR CS520, CS540 ONLY, ASN D416
13	84981465	1	PLATE, FIXING, , FOR CS640, CS660 ONLY, BSN C415
13	84071233	1	PLATE, FIXING, , FOR CS640, CS660 ONLY, ASN D416
14	86588450	AR	WASHER, M6, , BSN C415
15	120100	AR	BOLT, Hex, M6 x 20, 8.8, , BSN C415
16	9824326	AR	WASHER, {PP:89824326} M5, 5MM, ASN D416
17	NS	AR	NOT SERVICED, , ASN D416

13.213(01) LOWER SHAFT

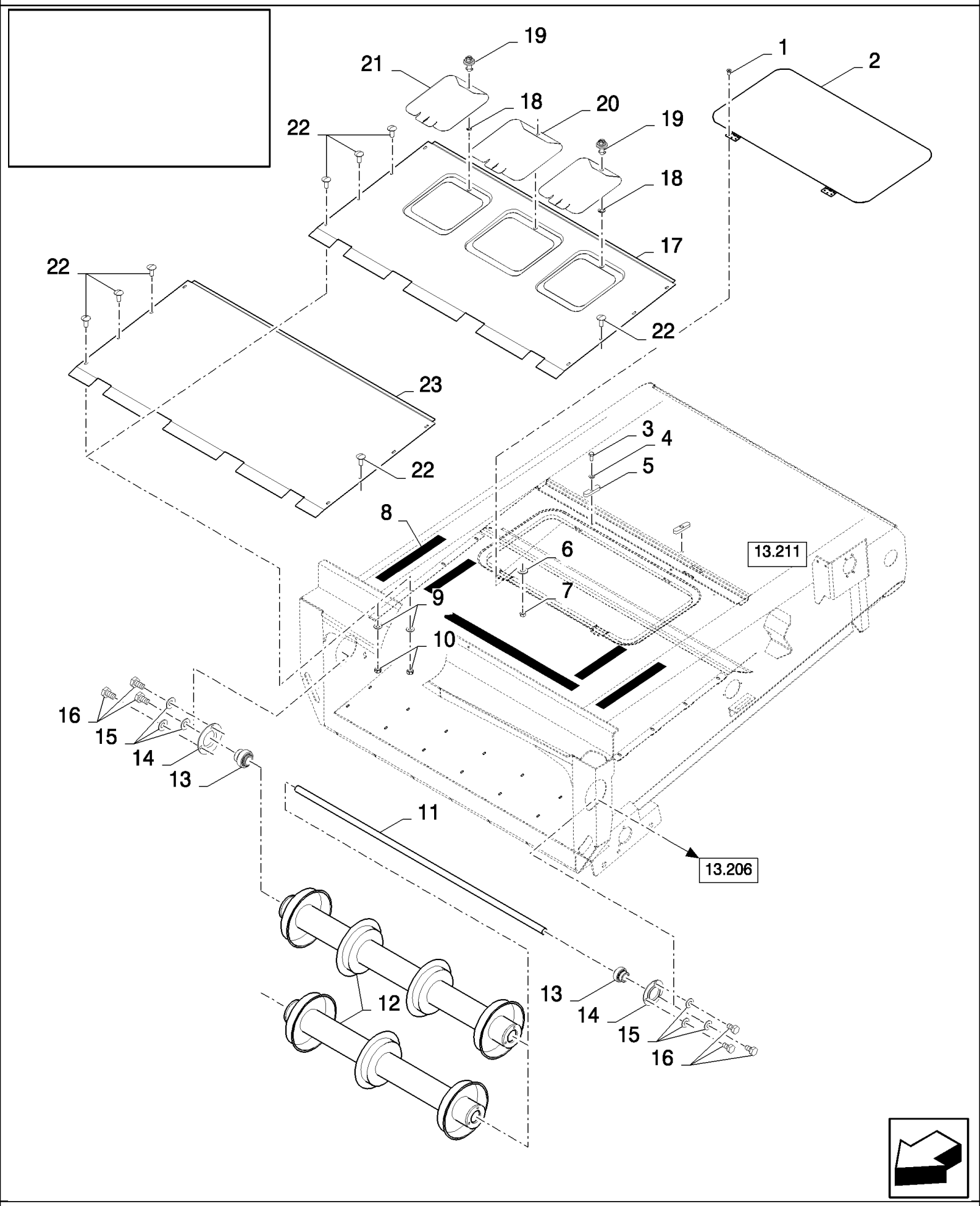

CS660 COMBINE BASE UNIT (1/03-) - Straw Elevator

13.213(01) LOWER SHAFT

ссылка	Номер детали	Кол-во	Описание
1	120100	6	BOLT, Hex, M6 x 20, 8.8,
2	84982332	1	COVER,
3	120104	2	BOLT, Hex, M8 x 20, 8.8,
4	378243	2	WASHER, M8,
5	84982331	2	CLIP,
6	322357	6	WASHER, SPRING, Belleville, M6,
7	15896221	6	NUT, M6, Cl 10,
8	401502	1	STRIP, ANTI-SKID, {PP:80401502} 51mm x 18.3 Roll - Cut to Size
9	89706690	8	NUT, M8, Cl 8,
10	322358	8	WASHER, SPRING, Belleville, M8,
11	84980843	1	SHAFT, , FOR CS520, CS540 ONLY, BSN C427
11	84993033	1	SHAFT, , FOR CS640, CS660 ONLY, BSN C427
12	84980931	1	SHAFT, , FOR CS520, CS540 ONLY, BSN C427
12	84457375	1	ROLLER, CONVEYOR, , FOR CS520, CS540 ONLY, BSN F428431
12	87318779	1	ROLLER, CONVEYOR, , FOR CS520, CS540 ONLY, ASN D432
12	84980792	1	SHAFT, , FOR CS640, CS660 ONLY, BSN C427
12	84077190	1	ROLLER, CONVEYOR, , FOR CS640, CS660 ONLY, BSN F428431
12	87318775	1	ROLLER, CONVEYOR, , FOR CS640, CS660 ONLY, ASN D432
13	84992371	2	BEARING ASSY, , BSN C427
14	40697	2	FLANGE, , BSN C427
15	140045	6	WASHER, SPRING, Belleville, M10, , BSN C427
16	43138	6	BOLT, Hex, M10 x 20, 8.8, Full Thd, , BSN C427
17	84980946	1	PLATE, , FOR CS520, CS540 ONLY, BSN C363
17	84448971	1	PLATE, , FOR CS520, CS540 ONLY, ASN D364
17	84981307	1	PLATE, , FOR CS640, CS660 ONLY, BSN C363
17	84449007	1	PLATE, , FOR CS640, CS660 ONLY, ASN D364
18	9514605	AR	RING, LOCKING,
19	89514603	AR	LOCK,
20	84071266	AR	COVER, , BSN C363
20	84448919	AR	COVER, , ASN D364
21	84071269	2	COVER, , FOR CS640, CS660 ONLY, BSN C363
21	84448921	2	COVER, , FOR CS640, CS660 ONLY, ASN D364
22	86507486	8	BOLT, CARRIAGE, Short NK, M8 x 20, Cl8.8, Full Thd,
23	87340925	1	SHEET, , FOR CS640, CS660 ONLY
23	87340918	1	SHEET, , FOR CS520, CS540 ONLY

13.214(01) ELEVATOR CHAIN

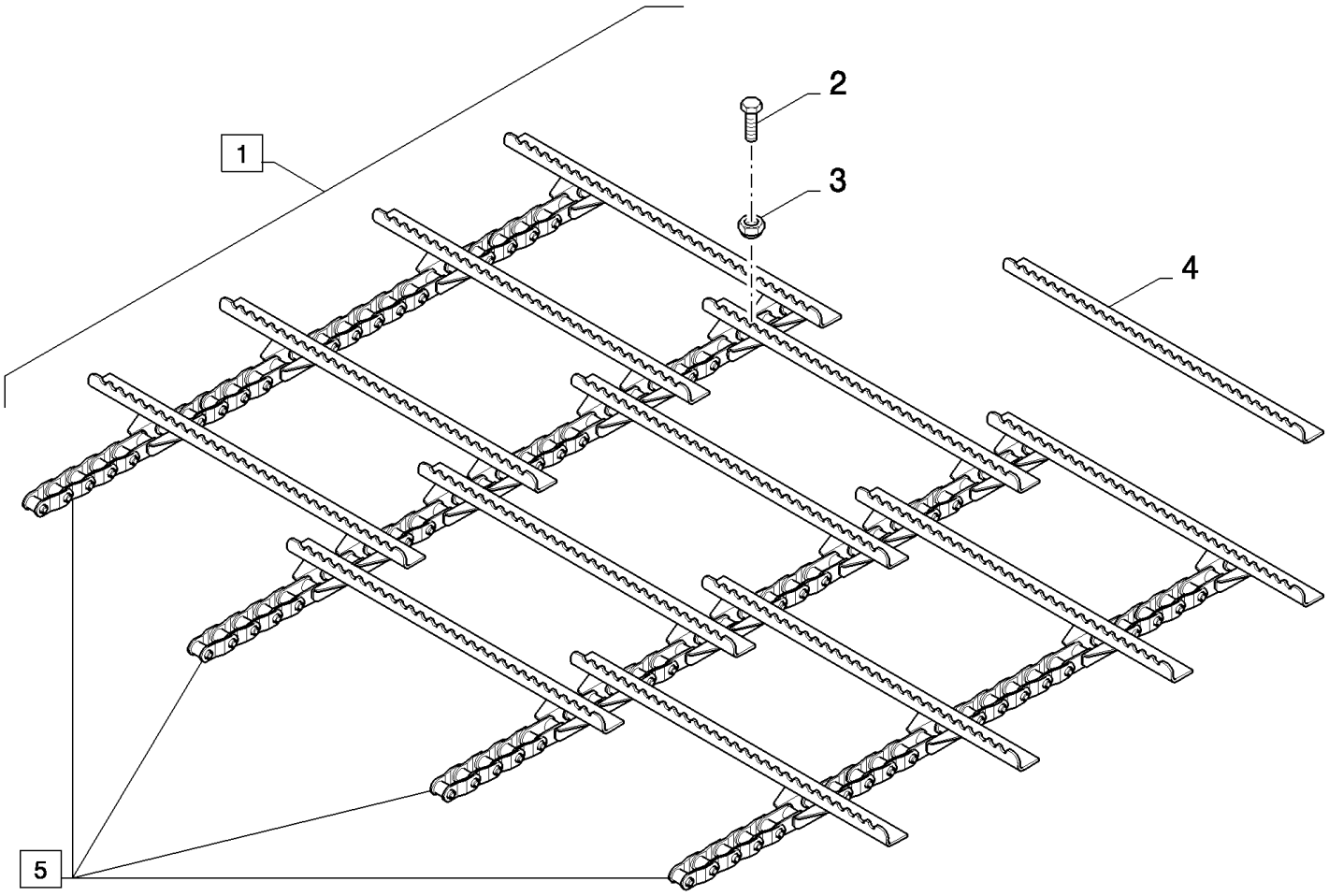

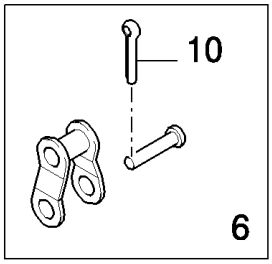

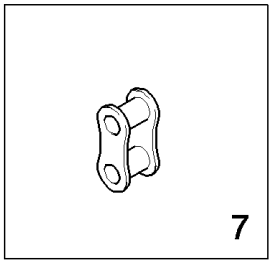

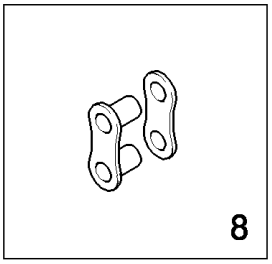

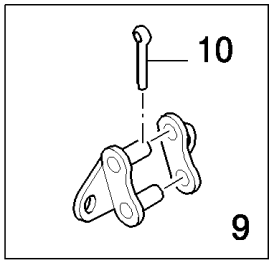

CS660 COMBINE BASE UNIT (1/03-) - Straw Elevator

13.214(01) ELEVATOR CHAIN

ссылка	Номер детали	Кол-во	Описание
1	84981395	1	CHAIN, (2 to 10), BSN C395
1	84441580	1	CHAIN, , ASN D396
2	120104	216	BOLT, Hex, M8 x 20, 8.8, , BSN C395
2	120104	168	BOLT, Hex, M8 x 20, 8.8, , ASN D396
3	86629542	216	NUT, LOCK, M8 x 1.25, Cl 8, , BSN C395
3	86629542	168	NUT, LOCK, M8 x 1.25, Cl 8, , ASN D396
4	84440367	54	BAR, , BSN C395
4	84440367	42	BAR, , ASN D396
5	84981396	1	SET OF CHAINS, (6 to 10), BSN C395
5	84441578	1	SET OF CHAINS, , ASN D396
6	40242	AR	LINK, OFFSET, {PP:80040242}
7	86595253	AR	LINK, CHAIN,
8	40241	AR	LINK, CONNECTING, {PP:80040241}
9	9835830	AR	LINK, CONNECTING, {PP:89835830}
10	NS	AR	NOT SERVICED,

13.215(01) STRAW ELEVATOR , SHIELDS LH

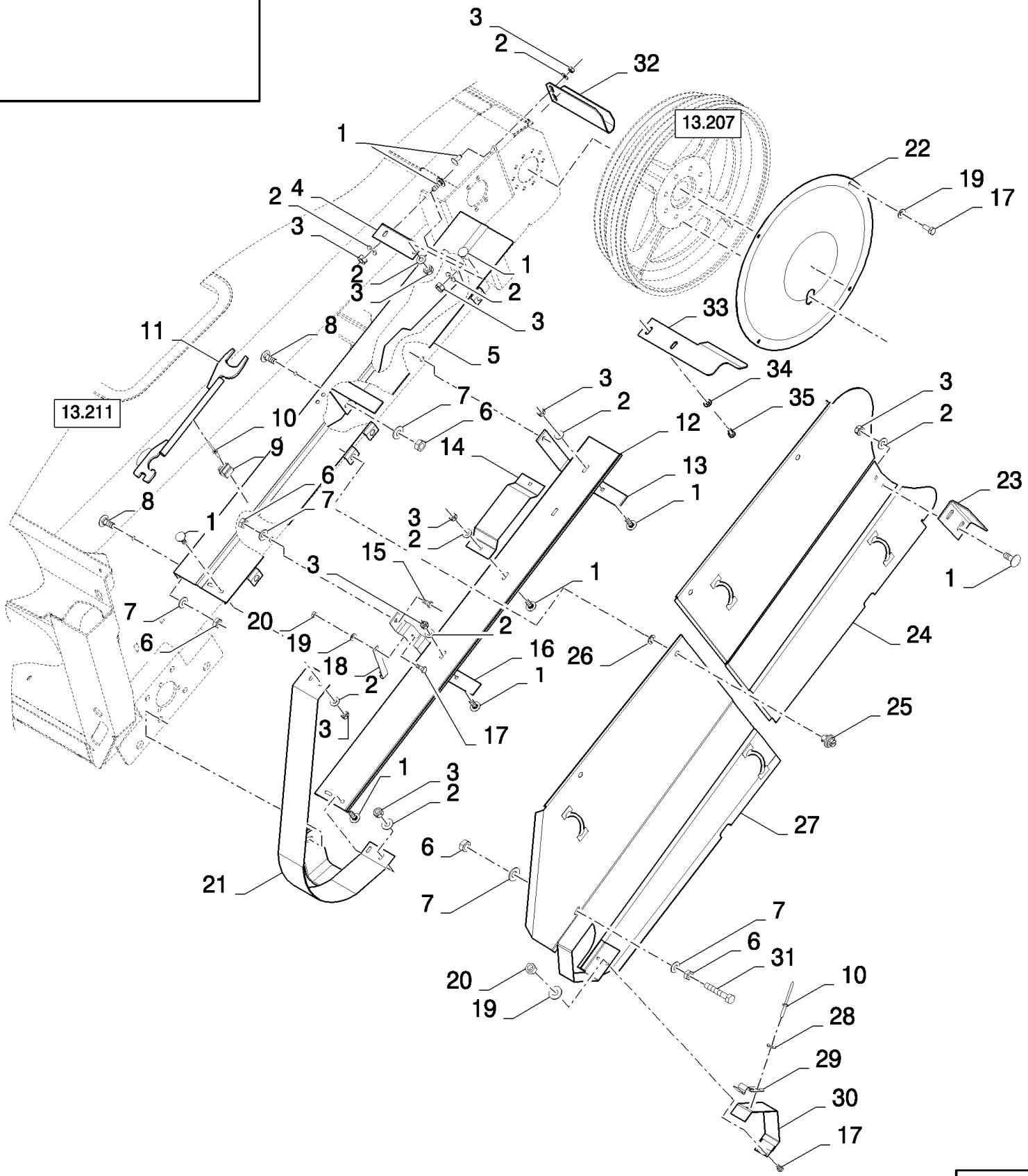

CS660 COMBINE BASE UNIT (1/03-) - Straw Elevator

13.215(01) STRAW ELEVATOR , SHIELDS LH

ссылка	Номер детали	Кол-во	Описание
1	86512420	15	BOLT, CARRIAGE, Short NK, M8 x 20, Cl8.8, Full Thd,
2	322358	15	WASHER, SPRING, Belleville, M8,
3	89706690	15	NUT, M8, Cl 8,
4	84981514	1	BRACKET,
5	84980240	1	SHIELD,
6	100016	5	NUT, M10, Cl 8,
7	140045	5	WASHER, SPRING, Belleville, M10,
8	338949	2	BOLT, CARRIAGE, Short NK, M10 x 25, Cl8.8, Full Thd,
9	323307	1	CLAMP, {PP:80323307}
10	80445395	3	RIVET,
11	84431038	1	KEY, LOCK,
12	84981513	1	SHIELD,
13	84981515	1	BRACKET,
14	84004143	1	BRACKET,
15	43139	1	SCREW, {PP:80043139} M10x25
16	84981512	1	BRACKET,
17	86508568	7	BOLT, Hex, M6 x 16, 8.8,
18	84072277	1	HOOK,
19	322357	7	WASHER, SPRING, Belleville, M6,
20	15896221	3	NUT, M6, Cl 10,
21	84980239	1	SHIELD, , BSN C363
21	84449029	1	SHIELD, , ASN D364
22	84981403	1	SHIELD,
23	84981500	1	BRACKET,
24	84981499	1	SHIELD, , BSN C363
24	84449590	1	SHIELD, , ASN D364
25	89514603	4	LOCK,
26	9514605	4	RING, LOCKING, {PP:89514605}
27	84980241	1	SHIELD, , BSN C301
27	84982313	1	SHIELD, , ASN D302
28	86588450	2	WASHER, M6,
29	9801069	1	LATCH, {PP:89801069}
30	84981539	1	SHIELD,
31	120070	1	BOLT, Hex, M10 x 60, 8.8,
32	84982310	1	PLATE, , ASN D302
33	84983437	1	GUIDE, , ASN D428
34	140045	2	WASHER, SPRING, Belleville, M10, , ASN D428
35	43139	2	SCREW, M10x25, ASN D428

13.216(01) SUSPENSION BRACES WITH LATERAL FLOTATION ONLY

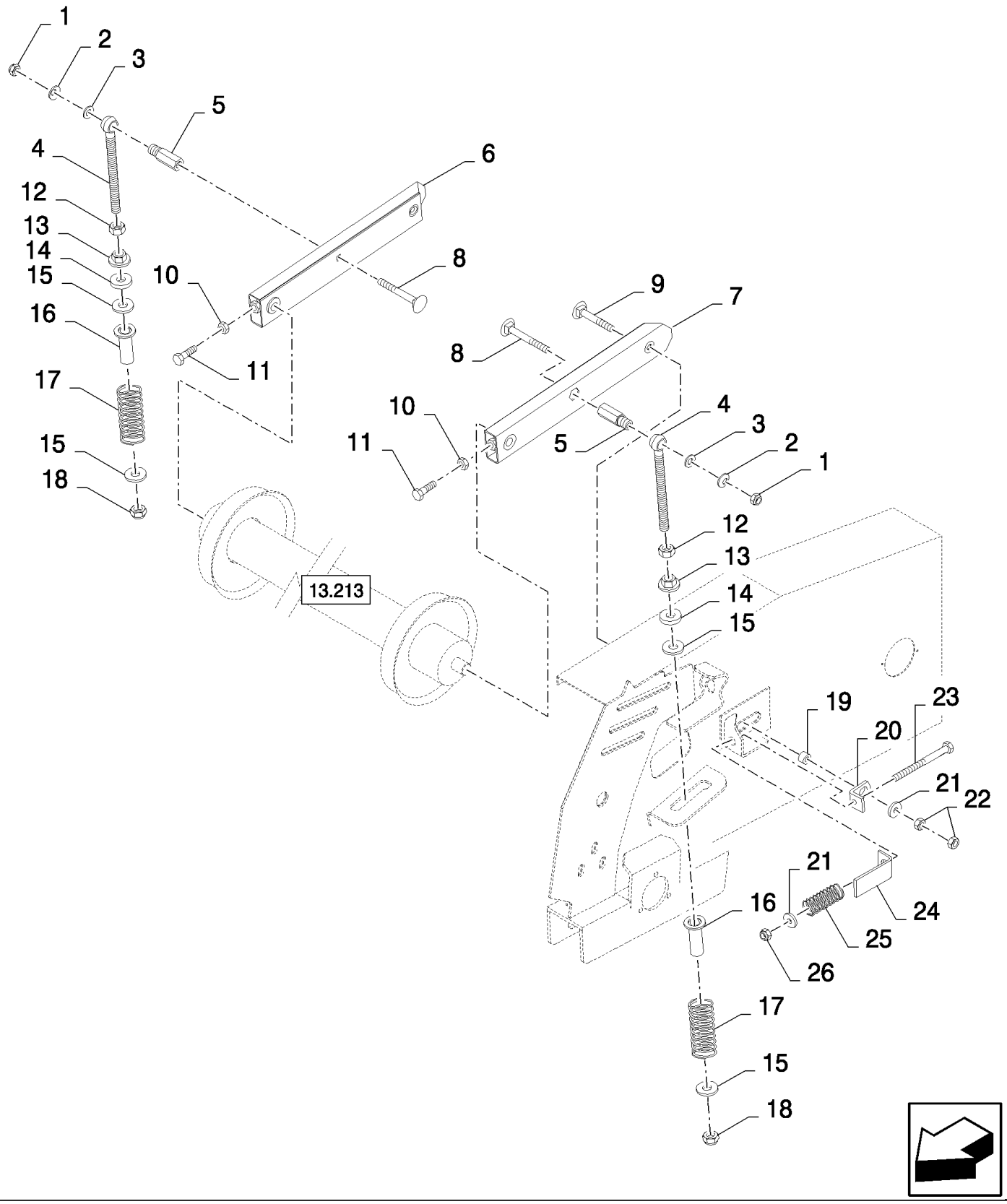

CS660 COMBINE BASE UNIT (1/03-) - Straw Elevator

13.216(01) SUSPENSION BRACES WITH LATERAL FLOTATION ONLY

ссылка	Номер детали	Кол-во	Описание
1	100038	2	NUT, LOCK, M12 x 1.75, Cl 8,
2	140046	2	WASHER, SPRING, Belleville, M12,
3	378245	2	WASHER, M12,
4	84035977	2	EYEBOLT,
5	84071261	2	BUSHING,
6	84980898	1	SUPPORT,
7	84980899	1	SUPPORT,
8	412339	2	BOLT, CARRIAGE, {PP:80412339} Short NK, M12 x 120, Cl8.8, M12x120
9	322362	2	BOLT, CARRIAGE, {PP:80322362} Short NK, M16 x 100, Cl8.8, M16x100
10	100016	2	NUT, M10, Cl 8,
11	43140	2	BOLT, Hex, M10 x 30, 8.8, Full Thd,
12	9706694	2	NUT, M20, Cl 8,
13	84072978	2	NUT,
14	84057094	2	DAMPER,
15	86592703	4	WASHER, M20 x 50 x 6, HT,
16	84072979	2	TUBE,
17	84072994	2	SPRING,
18	412180	2	NUT, LOCK, {PP:80412180} M20 x 2.5, Cl 8, M20
19	84076896	2	BUSHING,
20	84075539	2	BRACKET,
21	325594	4	WASHER, {PP:80325594} 17MM
22	100020	4	NUT, M16, Cl 8,
23	86508585	2	BOLT, Hex, M16 x 190, 8.8, M16x190
24	84981494	2	INDICATOR,
25	920487	2	SPRING, {PP:80920487}
26	412066	2	NUT, LOCK, {PP:80412066} M16 x 2, Cl 8, M16

13.217(01) LOWER SHAFT, 2HB

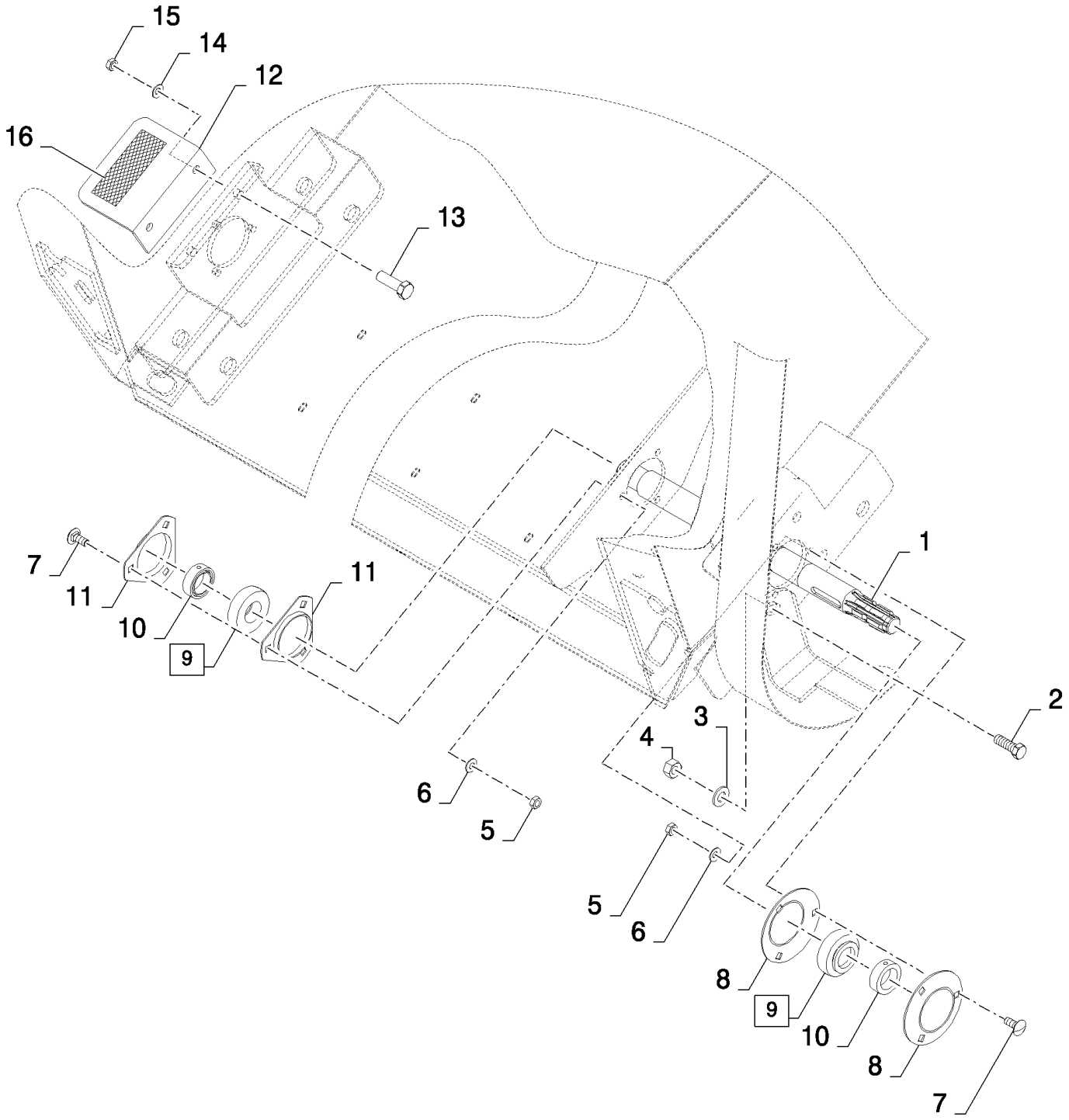

CS660 COMBINE BASE UNIT (1/03-) - Straw Elevator

13.217(01) LOWER SHAFT, 2HB

ссылка	Номер детали	Кол-во	Описание
1	84980919	1	SHAFT,
2	120090	1	BOLT, Hex, M16 x 50, 8.8,
3	140048	1	WASHER, SPRING, Belleville, M16,
4	100020	1	NUT, M16, Cl 8,
5	100016	6	NUT, M10, Cl 8,
6	140045	6	WASHER, SPRING, Belleville, M10,
7	338949	6	BOLT, CARRIAGE, Short NK, M10 x 25, Cl8.8, Full Thd,
8	86620026	2	FLANGE, , ASN D376
8	578189	2	FLANGE, {PP:80578189} , BSN C375
9	322360	2	BEARING, BALL, {PP:80322360} (10)
10	NSS	2	NOT SERVICED SEPARATELY,
11	578189	2	FLANGE, {PP:80578189}
12	84461204	1	PLATE, , ASN D428
13	89706687	2	SCREW, M12x30, ASN D428
14	140046	2	WASHER, SPRING, Belleville, M12, , ASN D428
15	89706685	2	NUT, M12, ASN D428
16	401502	AR	STRIP, ANTI-SKID, , ASN D428

13.218(01) STRAW ELEVATOR, GUIDE ROLL

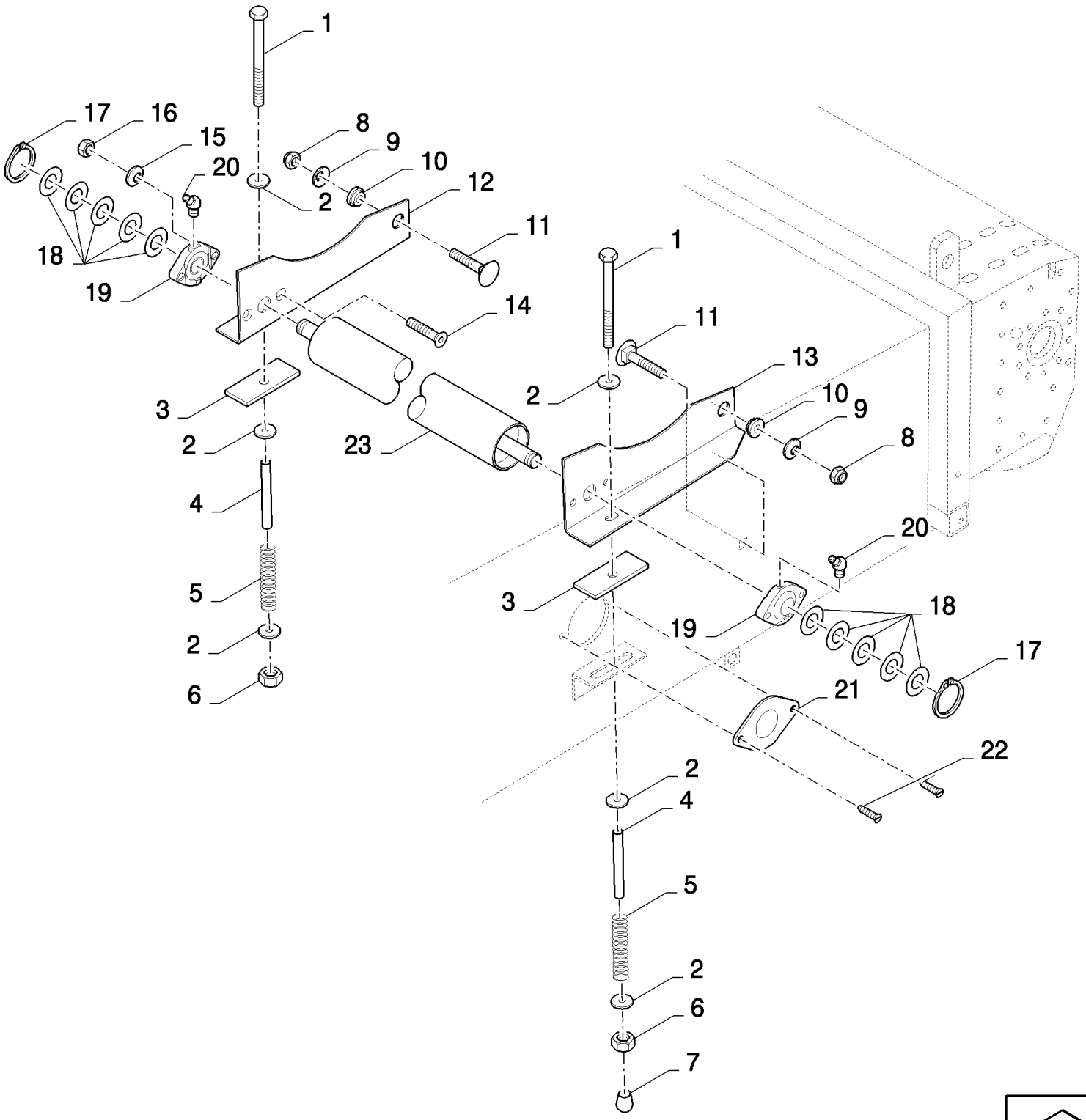

13.218(01) STRAW ELEVATOR, GUIDE ROLL

ссылка	Номер детали	Кол-во	Описание
1	412579	2	BOLT, {PP:80412579} Hex, M10 x 230, 8.8, M10x230
2	9832748	6	WASHER, {PP:89832748} 11MM
3	9500474	2	PAD, RUBBER, {PP:89500474}
4	84334391	2	TUBE,
5	354085	2	SPRING, {PP:80354085}
6	412141	2	NUT, LOCK, M10 x 1.5, Cl 8,
7	84005018	1	PLUG,
8	100038	2	NUT, LOCK, M12 x 1.75, Cl 8,
9	140046	2	WASHER, SPRING, Belleville, M12,
10	9500475	2	BUSHING, {PP:89500475}
11	120044	2	BOLT, CARRIAGE, Short NK, M12 x 30, Cl8.8, Full Thd,
12	84039236	1	SUPPORT, RH
13	84039235	1	SUPPORT, LH
14	412466	4	SCREW, {PP:80412466} Hex Soc Flat Hd, M10 x 35, 8.8, M10x40
15	140045	4	WASHER, SPRING, Belleville, M10,
16	100016	4	NUT, M10, Cl 8,
17	370002	2	RING, SNAP, {PP:80370002} M25, Ext,
18	140229	AR	WASHER, {PP:80140229} 26MM
19	9514667	2	BEARING ASSY, {PP:89514667}
20	84814929	2	NIPPLE, LUBE,
21	378663	2	COVER, {PP:80378663}
22	331619	4	SCREW, {PP:80331619}
23	84071545	1	ROLLER, , FOR CS520, CS540 ONLY
23	84071544	1	ROLLER, CONVEYOR, , FOR CS640, CS660 ONLY

13.219(01) CONNECTING FRAME FOR BALANCE FRAME WITH FRONT FACE ADJUSTMENT

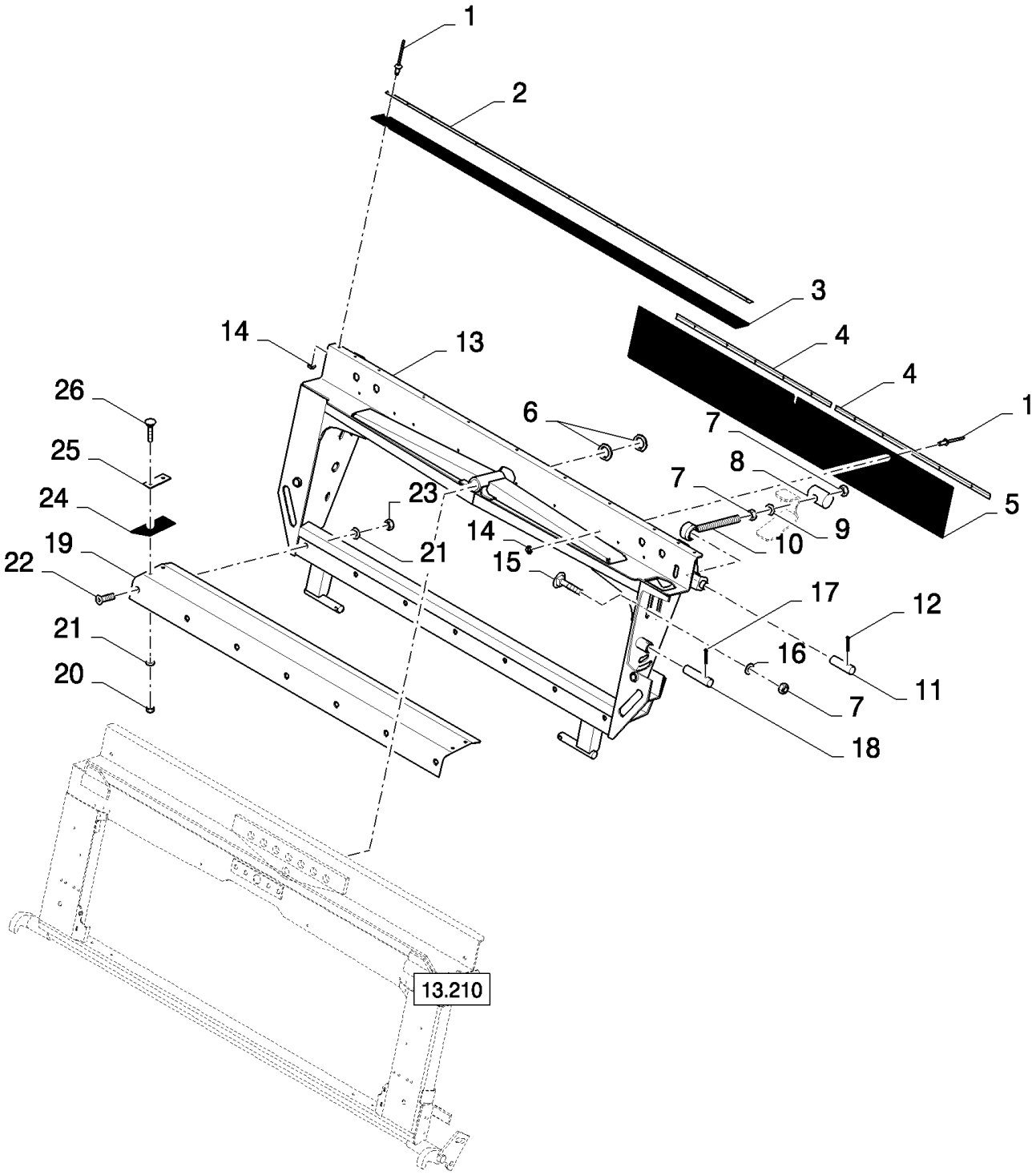

CS660 COMBINE BASE UNIT (1/03-) - Straw Elevator

13.219(01) CONNECTING FRAME FOR BALANCE FRAME WITH FRONT FACE ADJUSTMENT

ссылка	Номер детали	Кол-во	Описание
1	NS	AR	NOT SERVICED, Rivet
2	89593163	1	PLATE, FIXING, , FOR CS540 ONLY
2	84071233	1	PLATE, FIXING, , FOR CS640, CS660 ONLY
3	84069272	1	CANVAS, , FOR CS540 ONLY
3	84061508	1	CANVAS, , FOR CS640, CS660 ONLY
4	84073157	2	PLATE, FIXING, , FOR CS540 ONLY
4	84072732	2	PLATE, FIXING, , FOR CS640, CS660 ONLY
5	84069268	1	CANVAS, , FOR CS540 ONLY
5	84072188	1	CANVAS, , FOR CS640, CS660 ONLY
6	84018313	2	WASHER, 35MM
7	100020	22	NUT, M16, Cl 8,
8	9500556	2	SHAFT, {PP:89500556}
9	333040	2	WASHER, {PP:80333040} 16.5MM
10	84077745	2	EYEBOLT,
11	9500537	2	PIN, {PP:89500537}
12	130011	2	PIN, SPLIT (COTTER), {PP:80130011} M5 x 40,
13	84073018	1	FRAME, , FOR CS540 ONLY
13	84073017	1	FRAME, , FOR CS640, CS660 ONLY
14	9824326	AR	WASHER, {PP:89824326} M5, 5MM
15	412185	18	BOLT, CARRIAGE, Short NK, M16 x 50, Cl8.8, Full Thd,
16	86589278	18	WASHER, SPRING,
17	130016	2	PIN, SPLIT (COTTER), {PP:80130016} M6.3 x 63,
18	84072933	2	PIN,
19	84073155	1	PLATE, , FOR CS540 ONLY
19	84073025	1	PLATE, , FOR CS640, CS660 ONLY
20	86629542	4	NUT, LOCK, M8 x 1.25, Cl 8,
21	322358	AR	WASHER, SPRING, Belleville, M8,
22	300498	AR	SCREW, {PP:80300498} Hex Soc Flat Hd, M8 x 25, 10.9, M8x25
23	89706690	AR	NUT, M8, Cl 8,
24	9500510	2	CANVAS, {PP:89500510}
25	9500511	2	PLATE, {PP:89500511}
26	86507486	4	BOLT, CARRIAGE, Short NK, M8 x 20, Cl8.8, Full Thd,

13.220(01) ANTIWRAP SHIELDS

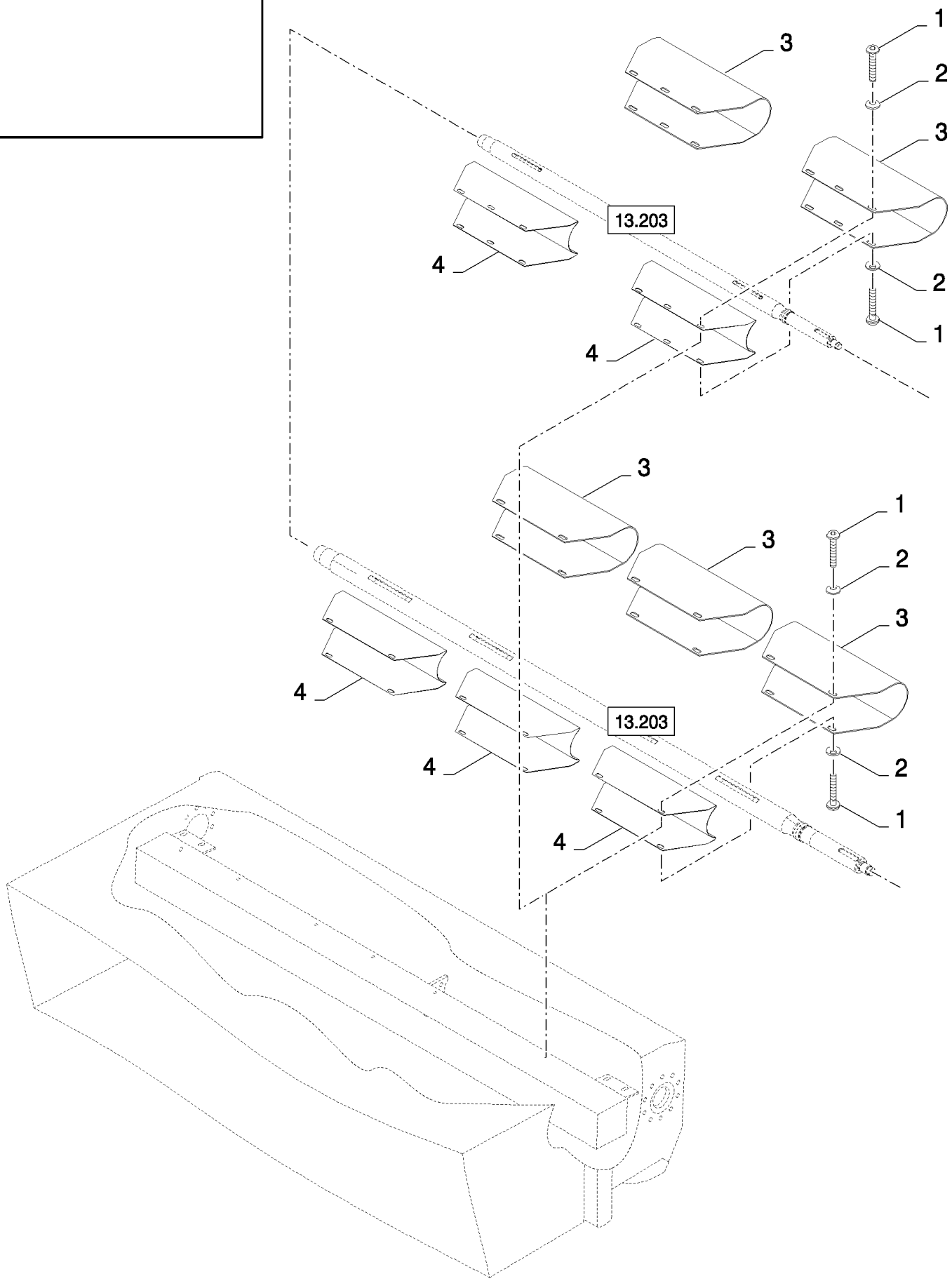

CS660 COMBINE BASE UNIT (1/03-) - Straw Elevator

13.220(01) ANTIWRAP SHIELDS

ссылка	Номер детали	Кол-во	Описание
1	86512788	12	SCREW, M8x30
2	412650	12	WASHER, SPRING, Belleville, M8,
3	84073714	2	SHIELD, , FOR CS520, CS540 ONLY
3	84072031	3	SHIELD, , FOR CS640, CS660 ONLY
4	84073715	2	SHIELD, , FOR CS520, CS540 ONLY
4	84073716	3	SHIELD, , FOR CS640, CS660 ONLY

13.224(01) ANTIWRAP SHIELDS

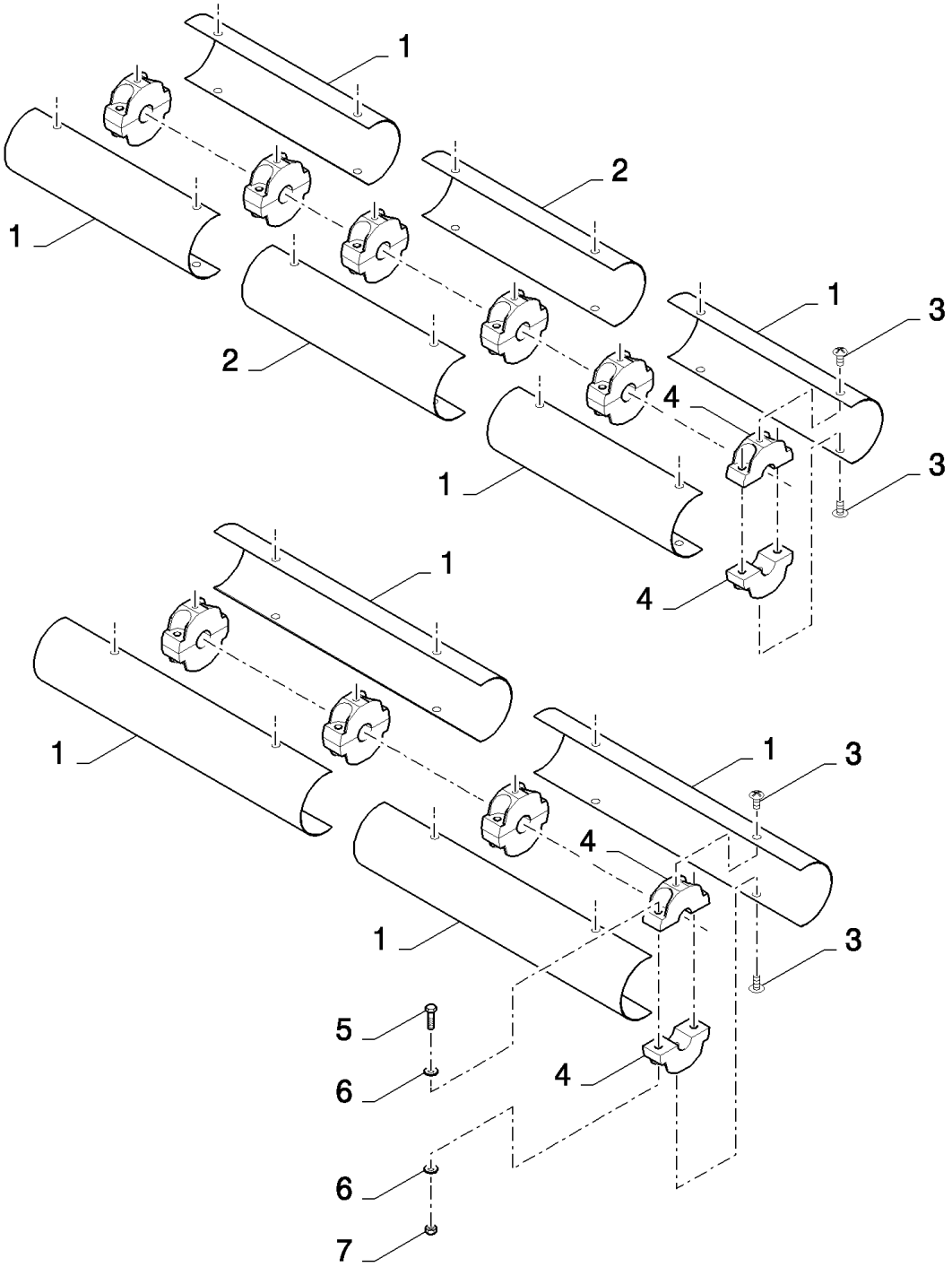

CS660 COMBINE BASE UNIT (1/03-) - Straw Elevator

13.224(01) ANTIWRAP SHIELDS

ссылка	Номер детали	Кол-во	Описание
1	449977	4	SHIELD, {PP:80449977} , FOR CS540 ONLY
1	84022121	4	SHIELD, , FOR CS640, CS660 ONLY
2	84449037	2	SHIELD, , FOR CS640, CS660 ONLY
3	62087	AR	SCREW, {PP:80062087} M8x20
4	9513095	8	CLAMP, {PP:89513095} , FOR CS540 ONLY
4	9513095	12	CLAMP, {PP:89513095} , FOR CS640, CS660 ONLY
5	386045	AR	BOLT, Hex, M8 x 45, 8.8,
6	378243	AR	WASHER, M8,
7	86629542	AR	NUT, LOCK, M8 x 1.25, Cl 8,

13.228(01) ELEVATOR SAFETY DEVICES, GERMANY

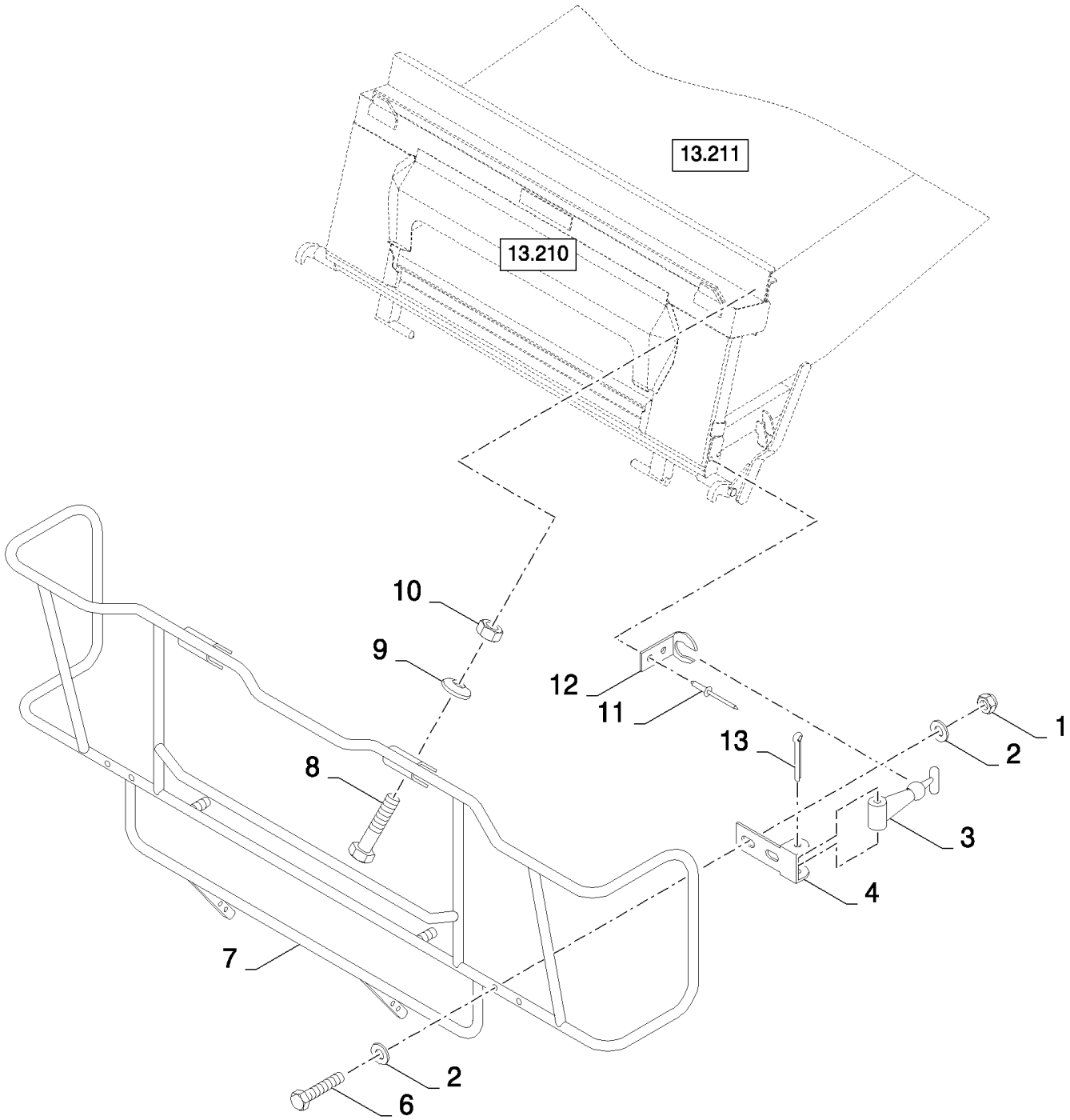

CS660 COMBINE BASE UNIT (1/03-) - Straw Elevator

13.228(01) ELEVATOR SAFETY DEVICES, GERMANY

ссылка	Номер детали	Кол-во	Описание
1	353308	4	NUT, LOCK, M6 x 1, Cl 8,
2	86588450	8	WASHER, M6,
3	353067	2	HANDLE, {PP:80353067}
4	350918	2	BRACKET, {PP:80350918}
5	300416	2	PIN, SPLIT (COTTER), {PP:80300416} M4 x 50,
6	120102	4	BOLT, Hex, M6 x 40, 8.8, Full Thd,
7	419643	1	SHIELD, {PP:80419643}
8	120061	2	BOLT, Hex, M8 x 60, 8.8,
9	322358	2	WASHER, SPRING, Belleville, M8,
10	89706690	2	NUT, M8, Cl 8,
11	NS	4	NOT SERVICED, RIVET
12	453857	2	CLIP, {PP:80453857}
13	300416	2	PIN, SPLIT (COTTER), {PP:80300416} M4 x 50,

THRESHING	**BATTAGE**	**TRILLA**	**TÆRSKNING**
TREBBIATURA	**DRUSCH**	**DEBULHA**	**DORSEN**

SEC. 14

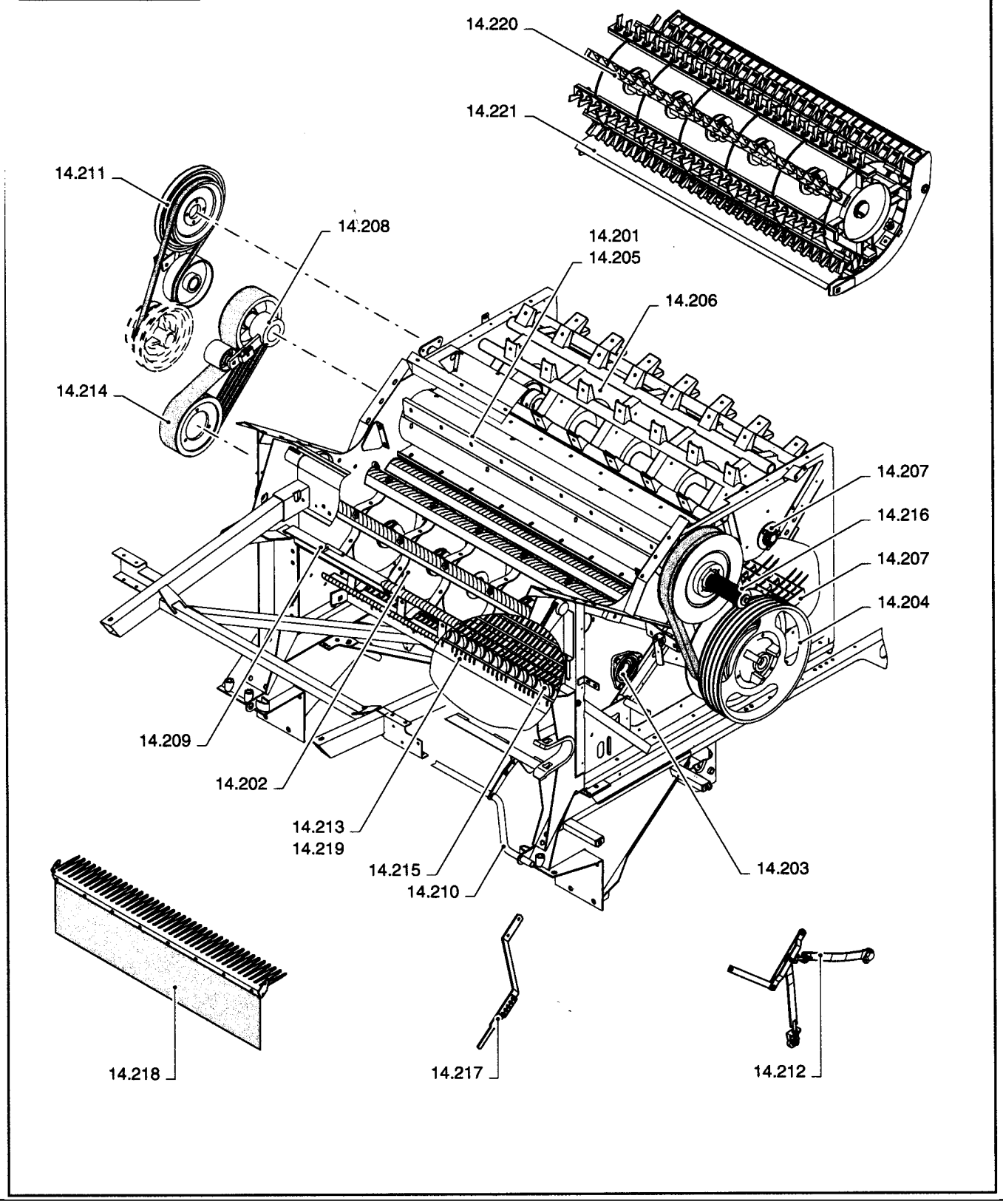

ссылка	Номер детали	Кол-во	Описание

14.201(01) BEATER AND WEAR PLATES, CONVERTIBLE

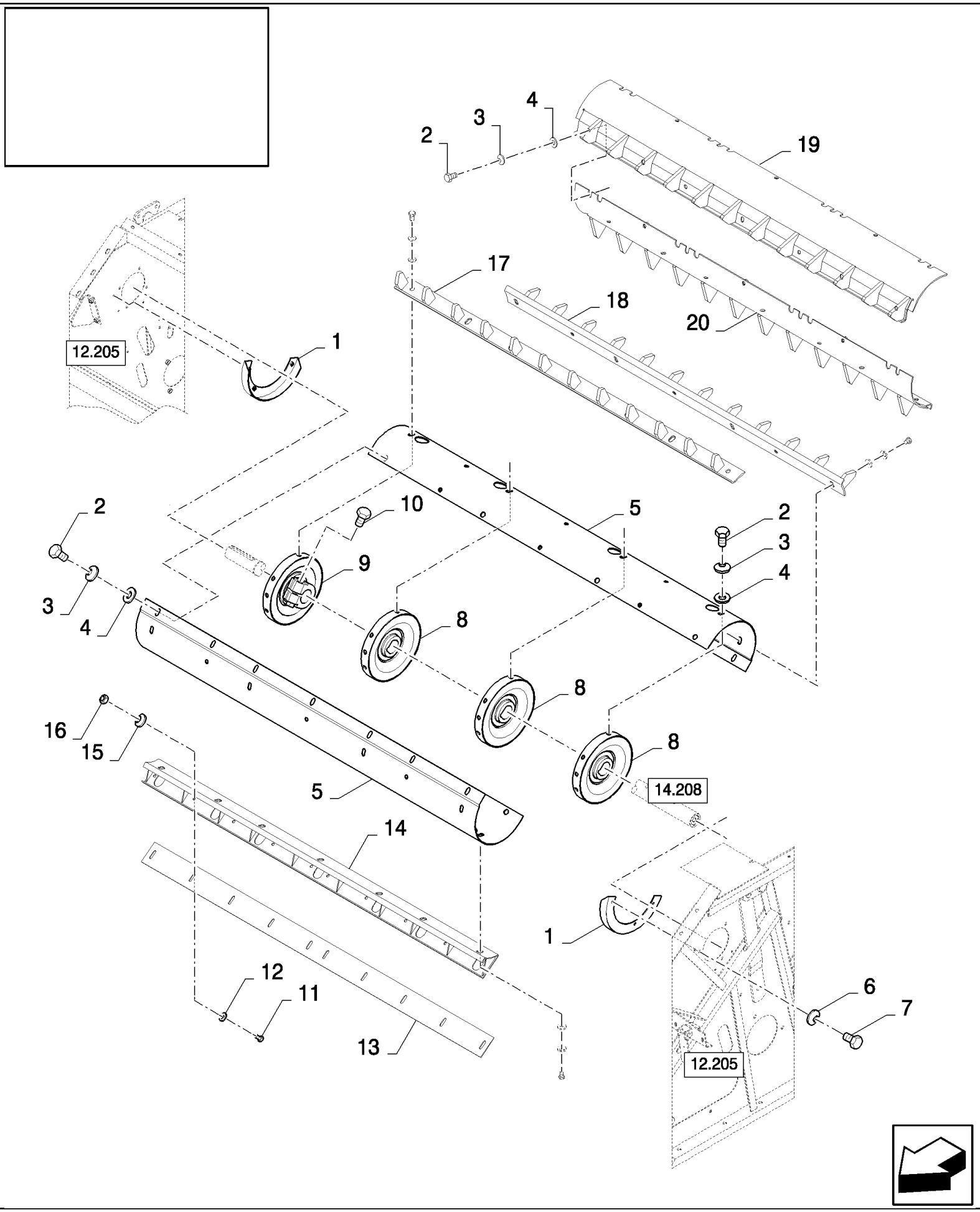

14.201(01) BEATER AND WEAR PLATES, CONVERTIBLE

ссылка	Номер детали	Кол-во	Описание
1	84435912	2	HALF-RING,
2	9706687	AR	BOLT, Hex, M12 x 30, 8.8,
3	140046	AR	WASHER, SPRING, Belleville, M12,
4	543043	AR	WASHER, {PP:80543043} 13MM
5	84433605	2	SHEET METAL, , FOR CS540 ONLY, FOR CL560 ONLY
5	84435847	2	SHEET METAL, , FOR CS640, CS660 ONLY
6	322357	6	WASHER, SPRING, Belleville, M6,
7	120100	6	BOLT, Hex, M6 x 20, 8.8,
8	84435802	3	DISC,
9	84435818	1	DISC,
10	350616	4	BOLT, Hex, M16 x 90, 8.8,
11	120104	AR	BOLT, Hex, M8 x 20, 8.8,
12	378243	AR	WASHER, M8,
13	84433415	4	PLATE, , FOR CL560 ONLY, FOR CS540 ONLY
13	84989512	4	PLATE, , FOR CS640, CS660 ONLY
14	84433420	4	SUPPORT, , FOR CS540 ONLY, FOR CL560 ONLY
14	84989489	4	SUPPORT, , FOR CS640, CS660 ONLY
15	322358	AR	WASHER, SPRING, Belleville, M8,
16	89706690	AR	NUT, M8, Cl 8,
17	84435903	2	RACK, , FOR CS640, CS660 ONLY
17	84433603	2	RACK, , FOR CL560 ONLY, FOR CS540 ONLY
18	84435899	2	RACK, , FOR CS640, CS660 ONLY
18	84433589	2	RACK, , FOR CS540 ONLY, FOR CL560 ONLY
19	84462657	2	LATH, , FOR CL560 ONLY, FOR CS540 ONLY
19	84462627	2	LATH, , FOR CS640, CS660 ONLY
20	84462655	2	LATH, , FOR CS540 ONLY, FOR CL560 ONLY
20	84462626	2	LATH, , FOR CS640, CS660 ONLY

14.202(01) DRUM, STANDARD

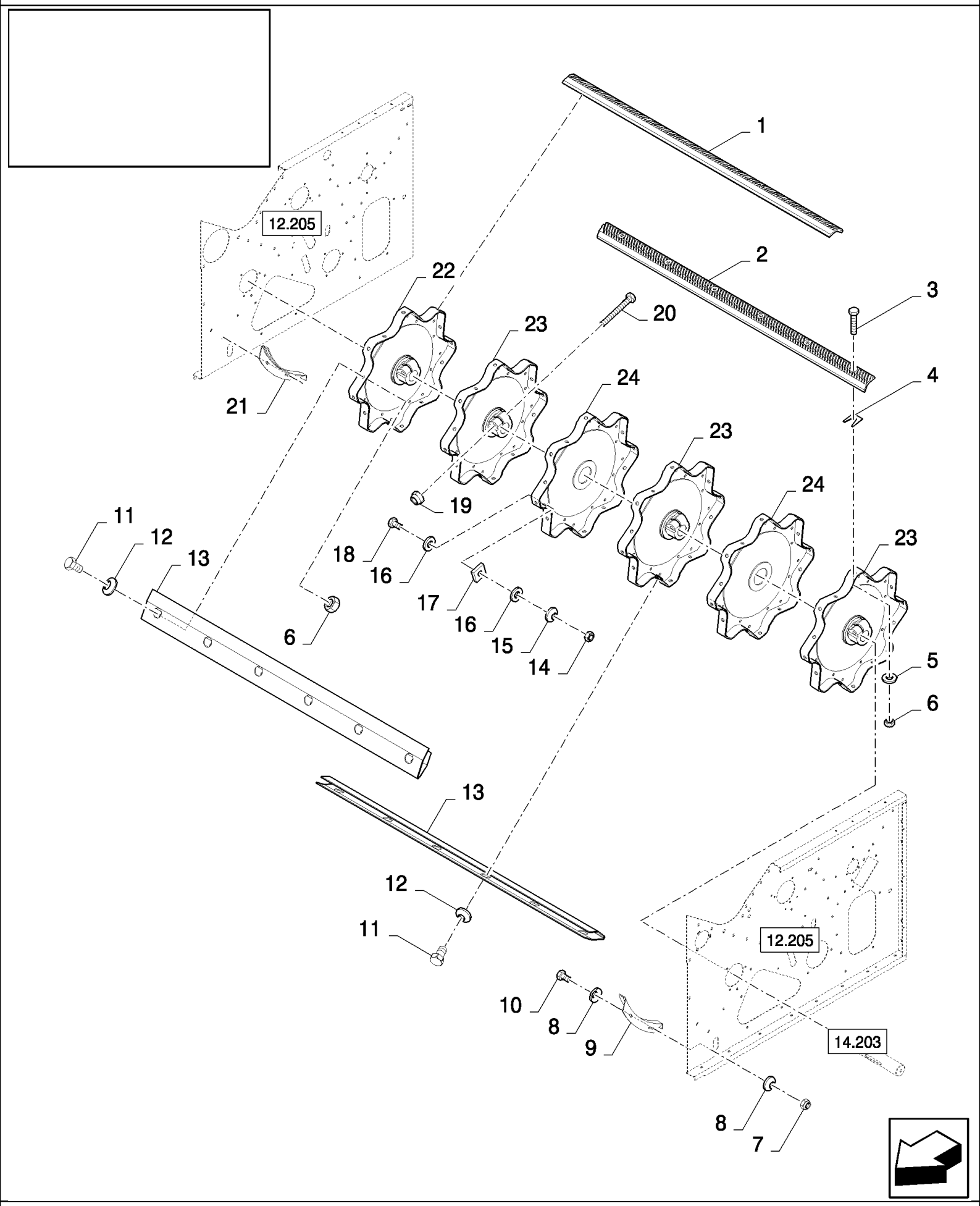

14.202(01) DRUM, STANDARD

ссылка	Номер детали	Кол-во	Описание
1	84438639	2	RASP BAR SET, LH, FOR CL560 ONLY, FOR CS520, CS540 ONLY
1	84438637	2	RASP BAR SET, LH, FOR CS640, CS660 ONLY
2	84438640	2	RASP BAR SET, RH, FOR CS520, CS540 ONLY, FOR CL560 ONLY
2	84438638	2	RASP BAR SET, RH, FOR CS640, CS660 ONLY
3	385376	AR	SCREW, {PP:80385376} M12x30
4	80481491	20	PLATE, ADJUSTING, , FOR CS520, CS540 ONLY, FOR CL560 ONLY
4	80481491	24	PLATE, ADJUSTING, , FOR CS640, CS660 ONLY
5	394630	AR	WASHER, {PP:80394630}
6	9706685	AR	NUT, M12, Cl 8,
7	353308	4	NUT, LOCK, M6 x 1, Cl 8,
8	322357	8	WASHER, SPRING, Belleville, M6,
9	333222	1	ANGLE BAR, {PP:80333222}
10	120100	4	BOLT, Hex, M6 x 20, 8.8,
11	300388	AR	BOLT, Hex, M12 x 25, 8.8,
12	140046	AR	WASHER, SPRING, Belleville, M12,
13	84442081	8	COVER, , FOR CS520, CS540 ONLY, FOR CL560 ONLY
13	84440498	8	COVER, , FOR CS640, CS660 ONLY
14	89706690	AR	NUT, M8, Cl 8,
15	322358	AR	WASHER, SPRING, Belleville, M8,
16	140041	AR	WASHER, M8 x 28 x 3,
17	351518	AR	PLATE, ADJUSTING, {PP:80351518}
18	43128	AR	BOLT, Hex, M8 x 30, 8.8,
19	86000441	4	NUT, LOCK, M16 x 2, Cl 8,
20	350616	4	BOLT, Hex, M16 x 90, 8.8,
21	335307	1	ANGLE BAR, {PP:80335307}
22	84440736	1	DISC,
23	84440731	3	DISC,
24	394487	1	DISC, {PP:80394487} , FOR CS520, CS540 ONLY, FOR CL560 ONLY
24	394487	2	DISC, {PP:80394487} , FOR CS640, CS660 ONLY

14.203(01) STANDARD DRUM, SHAFT AND BEARINGS

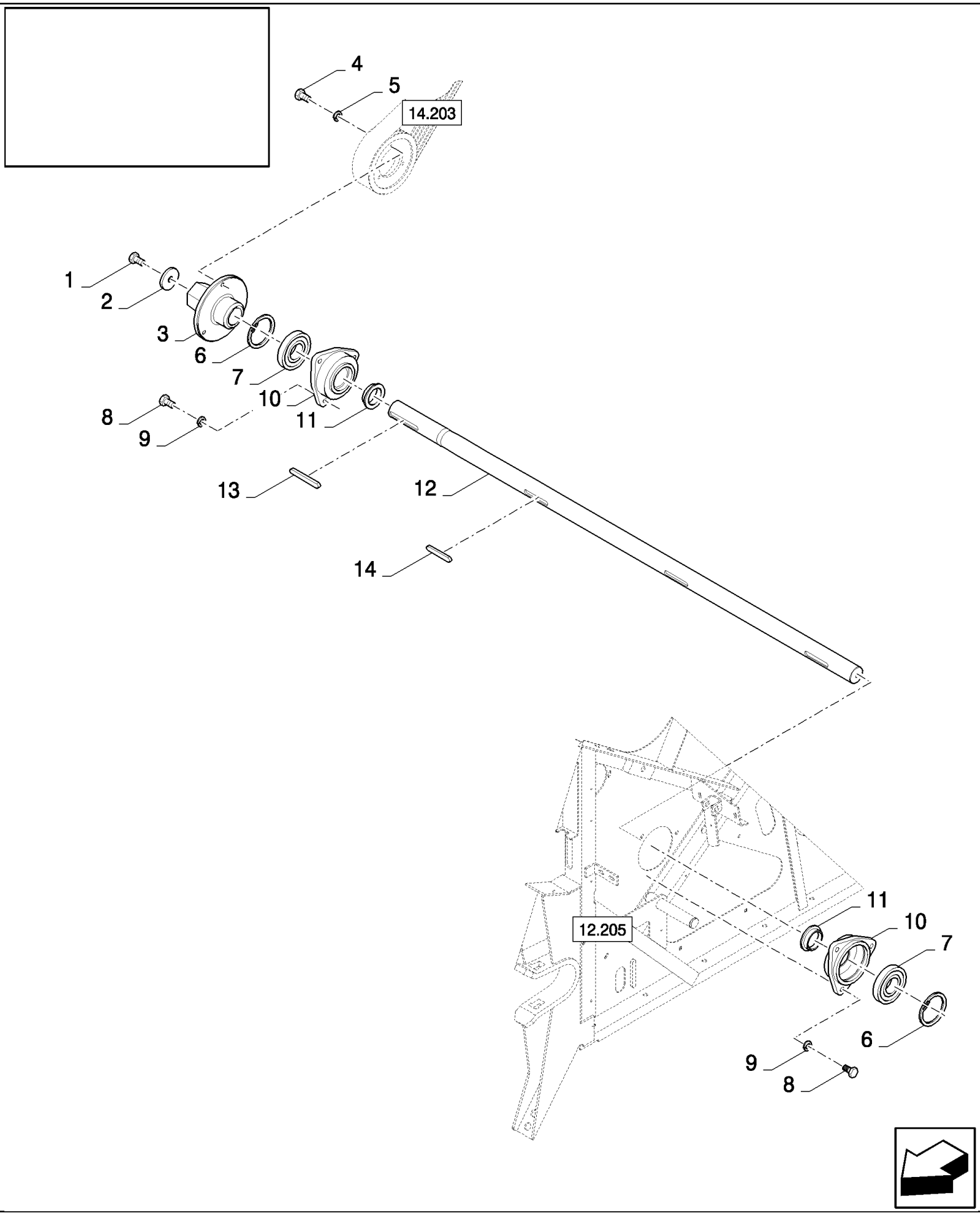

14.203(01) STANDARD DRUM, SHAFT AND BEARINGS

ссылка	Номер детали	Кол-во	Описание
1	43167	1	BOLT, Hex, M16 x 30, 8.8, Full Thd,
2	84435349	1	WASHER,
3	84334140	1	HUB,
4	9706687	3	BOLT, Hex, M12 x 30, 8.8,
5	140046	3	WASHER, SPRING, Belleville, M12,
6	301652	2	RING, SNAP, {PP:80301652} M110, Int,
7	388069	2	BEARING ASSY, {PP:80388069}
8	43140	6	BOLT, Hex, M10 x 30, 8.8, Full Thd,
9	140045	6	WASHER, SPRING, Belleville, M10,
10	84334105	2	HOUSING, BEARING,
11	388669	2	RING, {PP:80388669}
12	84432028	1	SHAFT, , FOR CS520, CS540 ONLY, FOR CL560 ONLY
12	84071597	1	SHAFT, , FOR CS640, CS660 ONLY
13	365612	1	KEY, {PP:80365612}
14	306248	3	KEY, {PP:80306248}

14.204(01) DRUM VARIATOR

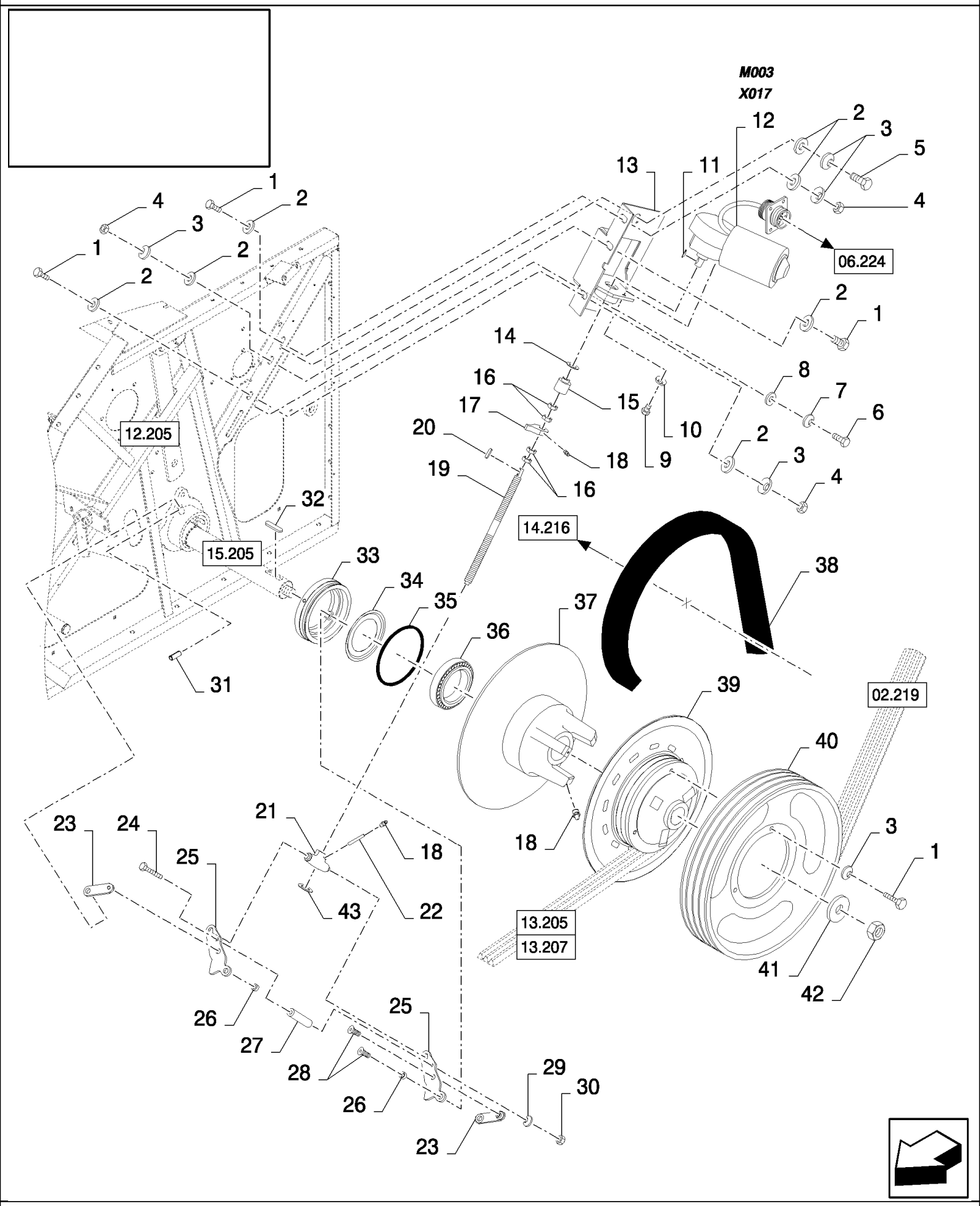

14.204(01) DRUM VARIATOR

ссылка	Номер детали	Кол-во	Описание
1	9706687	6	BOLT, Hex, M12 x 30, 8.8,
2	378245	7	WASHER, M12,
3	140046	7	WASHER, SPRING, Belleville, M12,
4	9706685	3	NUT, M12, Cl 8,
5	43151	1	BOLT, Hex, M12 x 20, 8.8, Full Thd,
6	120104	2	BOLT, Hex, M8 x 20, 8.8,
7	322358	2	WASHER, SPRING, Belleville, M8,
8	378243	2	WASHER, M8,
9	120100	3	BOLT, Hex, M6 x 20, 8.8,
10	322357	3	WASHER, SPRING, Belleville, M6,
11	84041731	1	WOODRUFF KEY,
12	84041620	1	MOTOR, ELECTRIC, , SEE FIGURE 06.701
13	84334759	1	SUPPORT,
14	84073115	1	WASHER, THRUST, 24MM
15	84334748	1	BUSHING,
16	84073134	4	NUT,
17	84334754	1	BLOCK,
18	321204	4	NIPPLE, LUBE, {PP:80321204} M6 x 1, 16mm lg,
19	84072854	1	ROD, THREADED,
20	336126	1	KEY, {PP:80336126}
21	84069528	1	BLOCK, COUPLING,
22	89818440	1	TUBE,
23	84069522	2	LINKAGE,
24	331168	1	BOLT, Hex, M10 x 140, 8.8,
25	84334764	2	LEVER,
26	84072865	2	SLEEVE,
27	84334765	1	BUSHING,
28	393698	4	SCREW, {PP:80393698} Hex Soc Flat Hd, M10 x 25, 8.8, M10x25
29	140045	1	WASHER, SPRING, Belleville, M10,
30	100016	1	NUT, M10, Cl 8,
31	393871	2	PIN, LOCK, {PP:80393871} M5 x 30, Slotted,
32	323624	1	KEY, {PP:80323624}
33	84069518	1	HUB,
34	84072864	1	FLANGE,
35	84072819	1	SEAL,
36	84072818	1	BEARING ASSY,
37	84334396	1	PULLEY,
38	84035748	1	BELT, TRANSMISSION,
39	84334407	1	PULLEY,
40	84334285	1	PULLEY,
41	84433644	1	WASHER,
42	300852	1	NUT, {PP:80300852} M30 x 1.5, Cl 8, M30x1.5
42	100034	2	NUT, M30 x 1.5, Cl 8, , FOR CL560 ONLY
43	84453625	1	SPACER,

14.206(01) ROTARY SEPARATOR AND WEAR PLATES

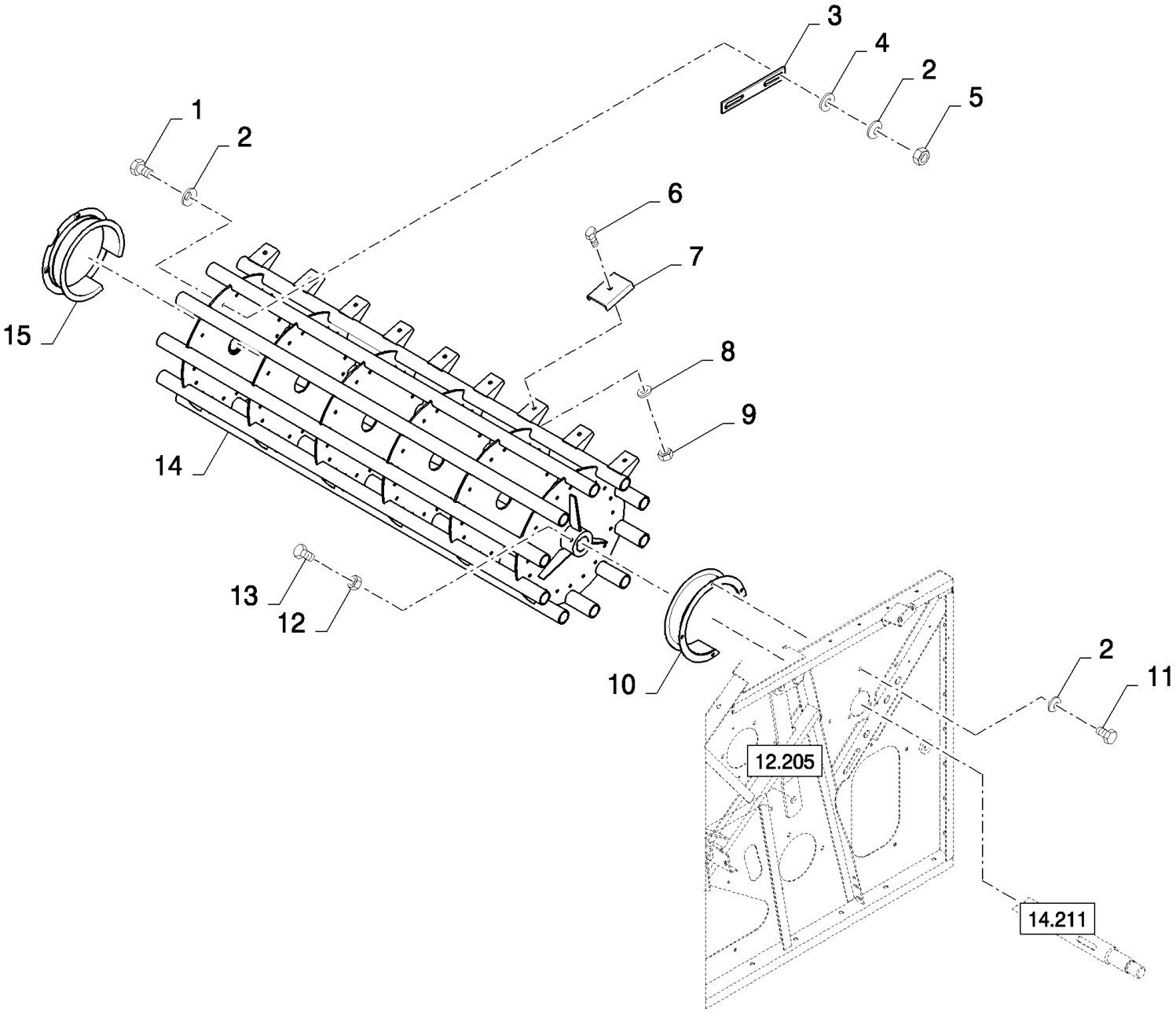

14.206(01) ROTARY SEPARATOR AND WEAR PLATES

ссылка	Номер детали	Кол-во	Описание
1	43128	AR	BOLT, Hex, M8 x 30, 8.8,
2	322358	AR	WASHER, SPRING, Belleville, M8,
3	351518	AR	PLATE, ADJUSTING, {PP:80351518} , FOR CS540 ONLY
4	140041	AR	WASHER, M8 x 28 x 3,
5	89706690	AR	NUT, M8, Cl 8,
6	338949	AR	BOLT, CARRIAGE, Short NK, M10 x 25, Cl8.8, Full Thd,
6	V43471	AR	BOLT, M10x20, FOR CL560 ONLY
7	9510423	70	PLATE, SKID, {PP:89510423} , FOR CL560 ONLY, FOR CS540 ONLY
7	9510423	85	PLATE, SKID, {PP:89510423} , FOR CS640, CS660 ONLY
8	378244	AR	WASHER, M10,
9	100037	AR	NUT, M10 x 1.5, Cl 8,
10	84073709	1	PROTECTING COVER,
11	120104	7	BOLT, Hex, M8 x 20, 8.8,
12	320648	2	NUT, {PP:80320648} M10, Cl 8, M10
13	9706704	2	BOLT, Hex, M10 x 35, 8.8, Full Thd,
14	84435329	1	BEATER, , FOR CS540 ONLY, FOR CL560 ONLY
14	84435277	1	BEATER, , FOR CS640, CS660 ONLY
15	9515746	1	PROTECTING COVER, {PP:89515746}

14.207(01) CONCAVE, ROTARY SEPARATOR

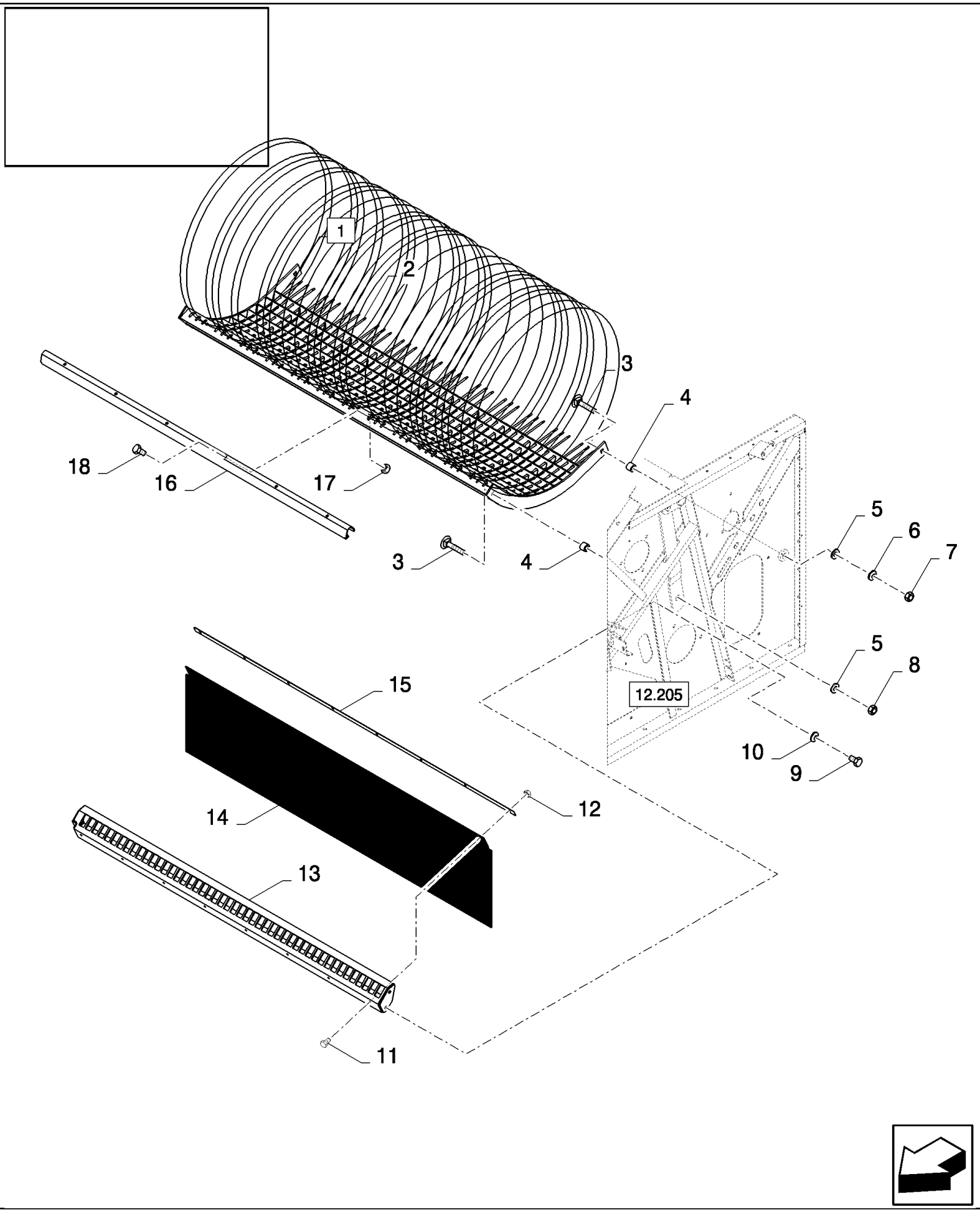

14.207(01) CONCAVE, ROTARY SEPARATOR

ссылка	Номер детали	Кол-во	Описание
1	84431261	1	CONCAVE, (2), FOR CS540 ONLY, FOR CL560 ONLY
1	84431236	1	CONCAVE, , FOR CS640, CS660 ONLY
2	84011227	AR	WIRE, (2)
3	328754	4	BOLT, CARRIAGE, Short NK, M12 x 40, Cl8.8, Full Thd,
4	84073698	4	BUSHING,
5	543043	4	WASHER, {PP:80543043} 13MM
6	140046	2	WASHER, SPRING, Belleville, M12,
7	9706685	2	NUT, M12, Cl 8,
8	100038	2	NUT, LOCK, M12 x 1.75, Cl 8,
9	43138	4	BOLT, Hex, M10 x 20, 8.8, Full Thd,
10	140045	4	WASHER, SPRING, Belleville, M10,
11	86508568	AR	BOLT, Hex, M6 x 16, 8.8,
12	353308	AR	NUT, LOCK, M6 x 1, Cl 8,
13	84431285	1	GRILLE, , FOR CL560 ONLY, FOR CS540 ONLY
13	84072239	1	GRILLE, , FOR CS640, CS660 ONLY
14	84431263	1	CANVAS, , FOR CS540 ONLY, FOR CL560 ONLY
14	84073686	1	CANVAS, , FOR CS640, CS660 ONLY
15	84431271	1	PLATE, FIXING, , FOR CL560 ONLY, FOR CS540 ONLY
15	84073695	1	PLATE, FIXING, , FOR CS640, CS660 ONLY
16	84431267	1	PROFILE, , FOR CS540 ONLY
16	84073696	1	PROFILE, , FOR CS640, CS660 ONLY
17	86629542	6	NUT, LOCK, M8 x 1.25, Cl 8,
18	120061	6	BOLT, Hex, M8 x 60, 8.8,

14.208(01) BEATER SHAFT

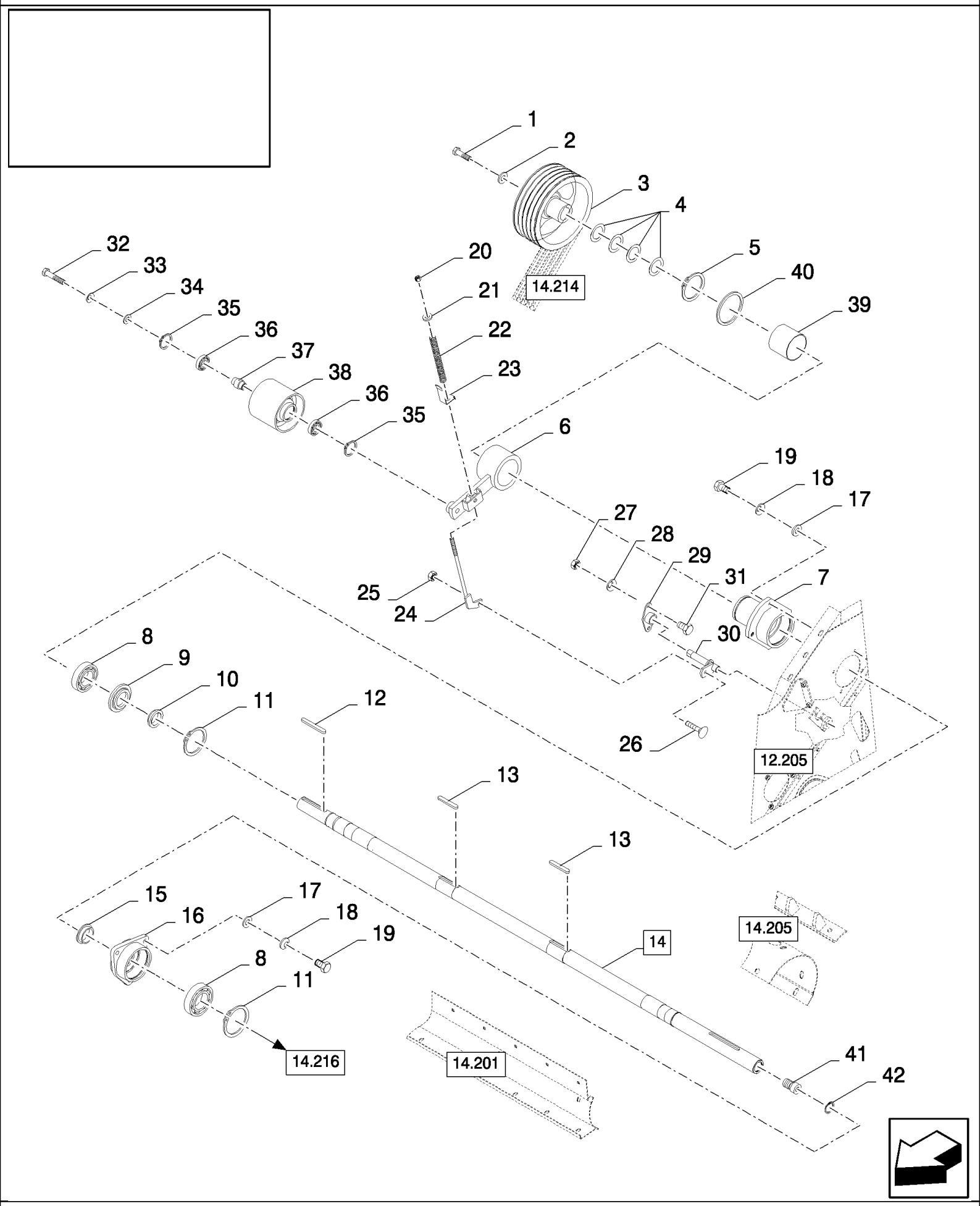

14.208(01) BEATER SHAFT

ссылка	Номер детали	Кол-во	Описание
1	86508583	1	BOLT, Hex, M16 x 35, 8.8,
2	84435349	1	WASHER,
3	84334166	1	PULLEY,
4	84072616	AR	RING,
5	300639	2	RING, SNAP, {PP:80300639} M90, Ext,
6	84444199	1	LEVER,
7	84072250	1	HOUSING, BEARING,
8	388069	2	BEARING ASSY, {PP:80388069}
9	388937	1	RING, {PP:80388937}
10	84032287	1	RING,
11	301652	2	RING, SNAP, {PP:80301652} M110, Int,
12	84072875	1	KEY,
13	434640	2	KEY, {PP:80434640}
14	84432463	1	SHAFT, (41,42), FOR CS520, CS540 ONLY, FOR CL560 ONLY
14	84432471	1	SHAFT, (41,42), FOR CS640, CS660 ONLY
15	388669	1	RING, {PP:80388669}
16	439605	1	HOUSING, BEARING, {PP:80439605}
17	378244	7	WASHER, M10,
18	140045	7	WASHER, SPRING, Belleville, M10,
19	9706704	7	BOLT, Hex, M10 x 35, 8.8, Full Thd,
20	412126	1	NUT, LOCK, M12 x 1.75, Cl 8,
21	378245	1	WASHER, M12,
22	84814910	1	SPRING,
23	84077288	1	INDICATOR,
24	84077226	1	TIE-ROD,
25	100037	1	NUT, M10 x 1.5, Cl 8,
26	338949	1	BOLT, CARRIAGE, Short NK, M10 x 25, Cl8.8, Full Thd,
27	89706690	2	NUT, M8, Cl 8,
28	322358	2	WASHER, SPRING, Belleville, M8,
29	338712	1	FLANGE, {PP:80338712}
30	84077232	1	SHAFT,
31	120104	2	BOLT, Hex, M8 x 20, 8.8,
32	43874	1	BOLT, Hex, M16 x 110, 8.8,
33	140048	1	WASHER, SPRING, Belleville, M16,
34	378246	1	WASHER, {PP:80378246} 16MM
35	370011	2	RING, SNAP, {PP:80370011} M52, Int,
36	443898	2	BEARING, BALL, {PP:80443898}
37	9819056	1	BUSHING, {PP:89819056}
38	84437587	1	WHEEL, IDLER,
39	84444179	1	SLEEVE,
40	442413	1	RING, {PP:80442413}
41	84072845	1	BUSHING,
42	300642	1	RING, SNAP, M35, Int,

14.209(01) SPRING LOADED DUSTPLATE

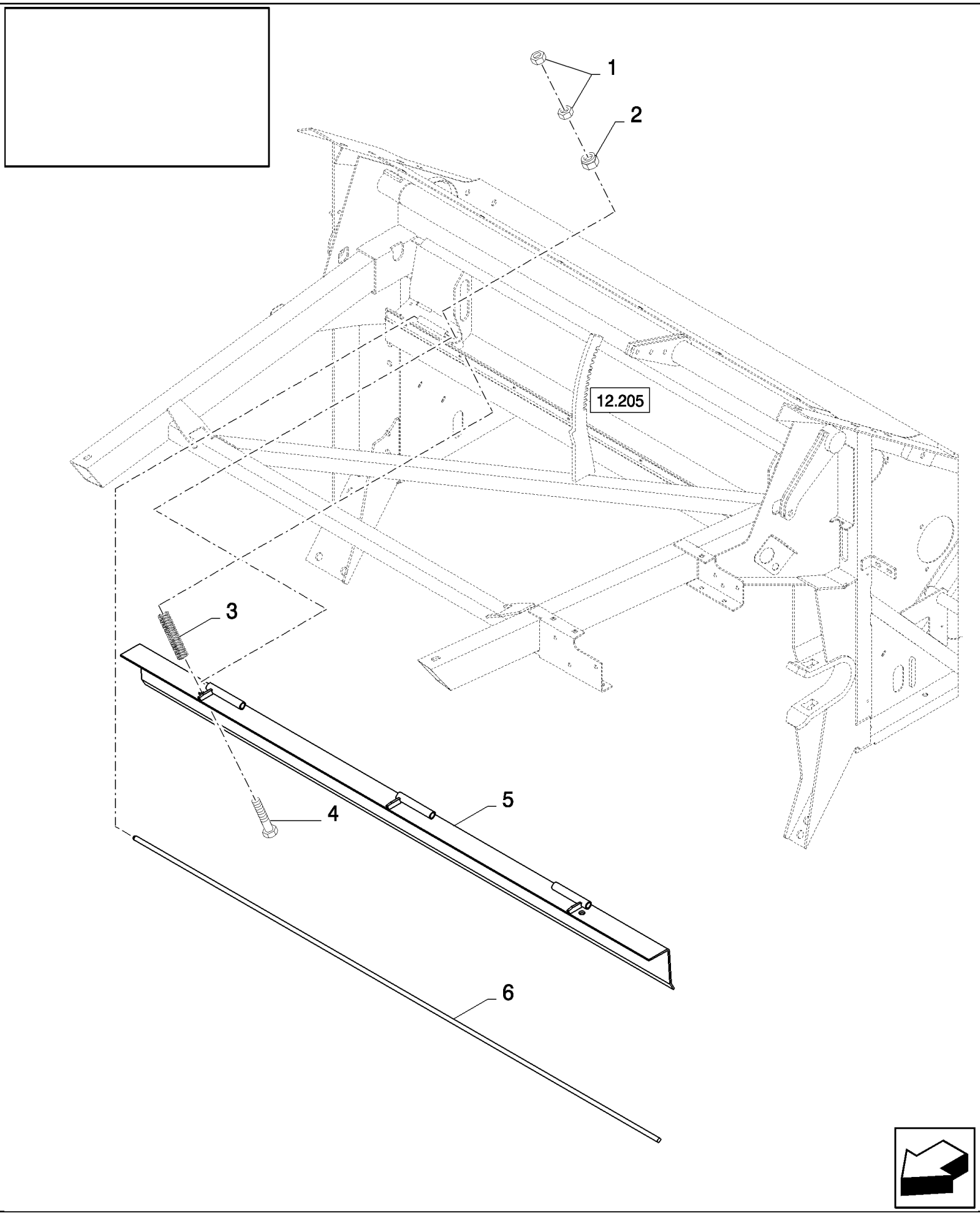

14.209(01) SPRING LOADED DUSTPLATE

ссылка	Номер детали	Кол-во	Описание
1	100016	4	NUT, M10, Cl 8,
2	412141	2	NUT, LOCK, M10 x 1.5, Cl 8,
3	180069	2	SPRING, {PP:80180069}
4	120117	2	BOLT, Hex, M10 x 110, 8.8, Full Thd,
5	84432438	1	COVER, , FOR CS520, CS540 ONLY, FOR CL560 ONLY
5	84075232	1	COVER, , FOR CS640, CS660 ONLY
6	394608	1	ROD, {PP:80394608} , FOR CS520, CS540 ONLY, FOR CL560 ONLY
6	390376	1	ROD, {PP:80390376} , FOR CS640, CS660 ONLY

14.210(01) STONE TRAP AND COVER PLATE

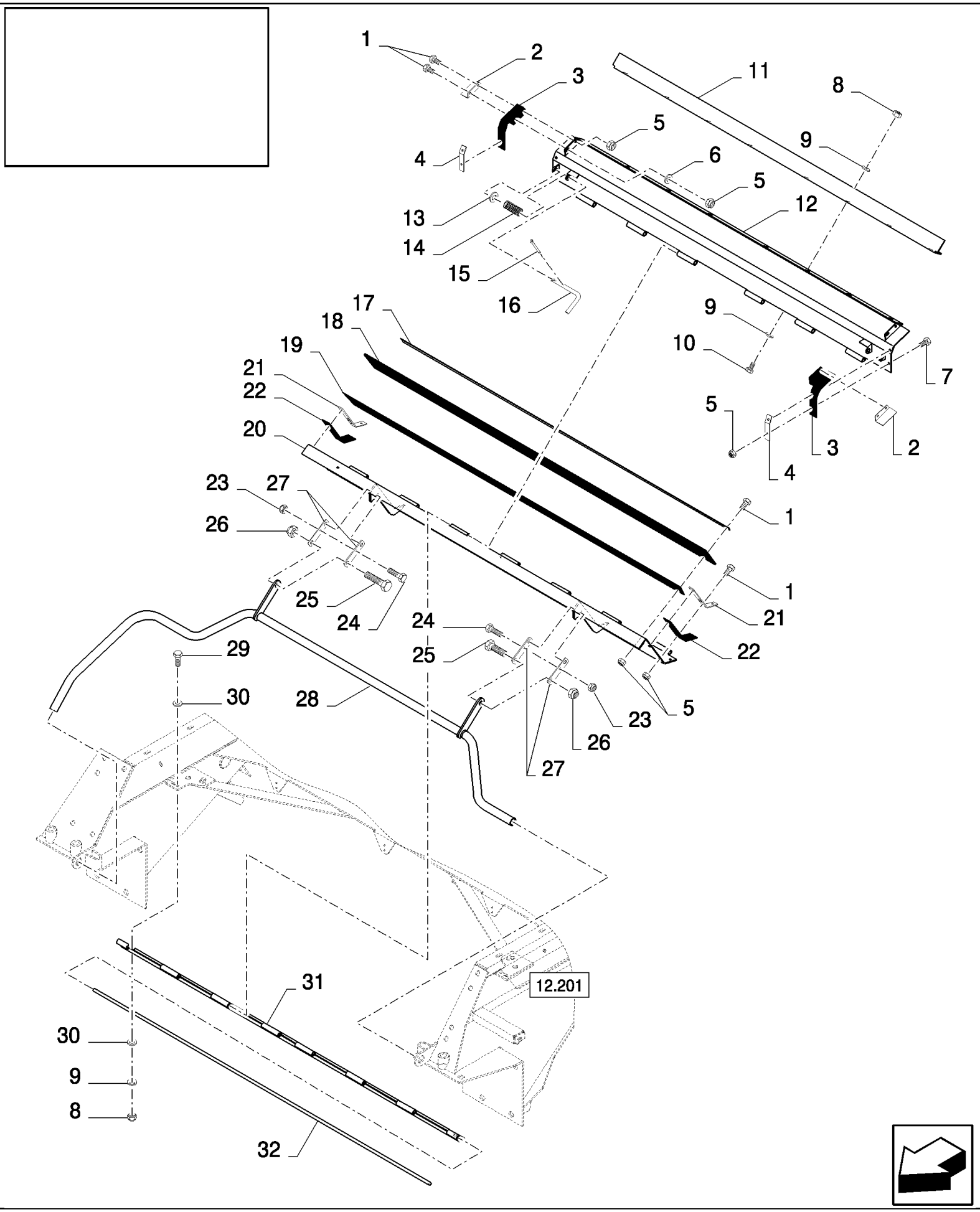

14.210(01) STONE TRAP AND COVER PLATE

ссылка	Номер детали	Кол-во	Описание
1	120100	AR	BOLT, Hex, M6 x 20, 8.8,
2	84072895	2	BRACKET,
3	84071726	2	CANVAS,
4	84072893	2	BRACKET,
5	353308	AR	NUT, LOCK, M6 x 1, Cl 8,
6	9824259	2	WASHER, M6 x 12 x 1.6,
7	86508568	4	BOLT, Hex, M6 x 16, 8.8,
8	89706690	AR	NUT, M8, Cl 8,
9	322358	AR	WASHER, SPRING, Belleville, M8,
10	120104	AR	BOLT, Hex, M8 x 20, 8.8,
11	84077984	1	PLATE, COVER, , FOR CS520, CS540 ONLY, FOR CL560 ONLY
11	84072889	1	PLATE, COVER, , FOR CS640, CS660 ONLY
12	84334042	1	PLATE, COVER, , FOR CS520, CS540 ONLY, FOR CL560 ONLY
12	84071741	1	PLATE, COVER, , FOR CS640, CS660 ONLY
13	86588502	2	WASHER, M12 x 25 x 3, 12MM
14	84814911	2	SPRING,
15	130005	2	PIN, SPLIT (COTTER), {PP:80130005} M3.2 x 32,
16	84072894	2	HANDLE,
17	9815946	1	PLATE, FIXING, {PP:89815946} , FOR CS520, CS540 ONLY, FOR CL560 ONLY
17	84000704	1	STRIP, , FOR CS640, CS660 ONLY
18	9813902	1	CANVAS, {PP:89813902} , FOR CS520, CS540 ONLY, FOR CL560 ONLY
18	9831017	1	CANVAS, {PP:89831017} , FOR CS640, CS660 ONLY
19	9813903	1	CANVAS, {PP:89813903} , FOR CS520, CS540 ONLY, FOR CL560 ONLY
19	9813936	1	CANVAS, {PP:89813936} , FOR CS640, CS660 ONLY
20	84334021	1	COVER, , FOR CS520, CS540 ONLY, FOR CL560 ONLY
20	84072886	1	COVER, , FOR CS640, CS660 ONLY
21	84072891	2	BRACKET,
22	84071813	2	CANVAS,
23	86629542	2	NUT, LOCK, M8 x 1.25, Cl 8,
24	43127	2	BOLT, Hex, M8 x 25, 8.8,
25	9706687	4	BOLT, Hex, M12 x 30, 8.8,
26	100038	4	NUT, LOCK, M12 x 1.75, Cl 8,
27	84072935	4	BRACKET,
28	84334023	1	LEVER, , FOR CS520, CS540 ONLY, FOR CL560 ONLY
28	84072951	1	LEVER, , FOR CS640, CS660 ONLY
29	43128	4	BOLT, Hex, M8 x 30, 8.8,
30	140041	8	WASHER, M8 x 28 x 3,
31	84432552	1	HINGE, , FOR CS520, CS540 ONLY, FOR CL560 ONLY
31	84072892	1	HINGE, , FOR CS640, CS660 ONLY
32	394608	1	ROD, {PP:80394608} , FOR CS520, CS540 ONLY, FOR CL560 ONLY
32	390376	1	ROD, {PP:80390376} , FOR CS640, CS660 ONLY

14.211(01) ROTARY SEPARATOR DRIVE AND SHAFT

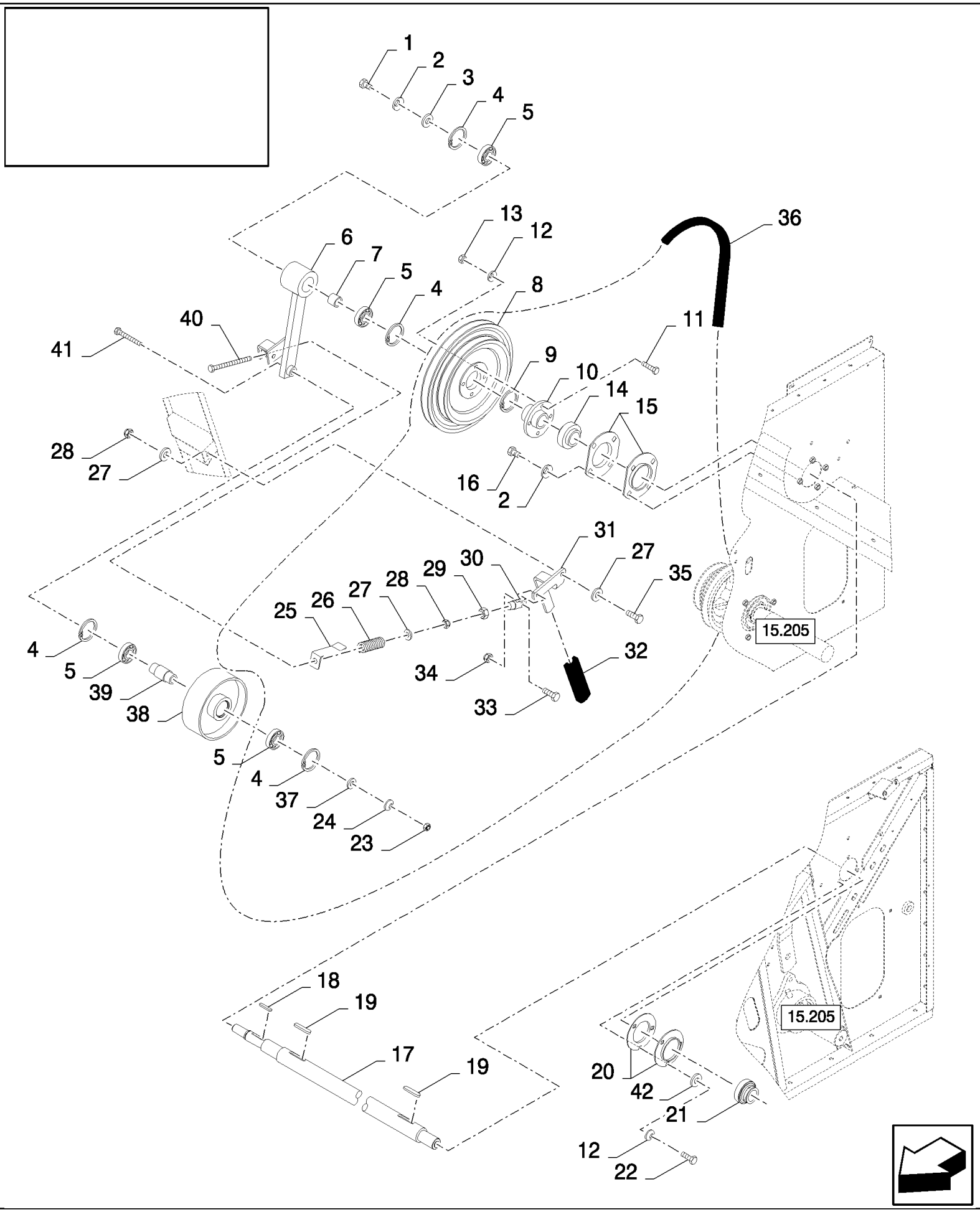

14.211(01) ROTARY SEPARATOR DRIVE AND SHAFT

ссылка	Номер детали	Кол-во	Описание
1	9706687	1	BOLT, Hex, M12 x 30, 8.8,
2	140046	5	WASHER, SPRING, Belleville, M12,
3	9839232	1	WASHER, {PP:89839232} 13MM
4	370011	4	RING, SNAP, {PP:80370011} M52, Int,
5	443898	4	BEARING, BALL, {PP:80443898}
6	84076933	1	ARM, , BSN C507
6	87381774	1	ARM, , ASN D508
7	430235	1	BUSHING,
8	84814020	1	PULLEY,
9	370004	1	RING, SNAP, M35, Ext,
10	84334177	1	FLANGE,
11	120112	4	BOLT, Hex, M10 x 40, 8.8, Full Thd, , BSN C507
11	412151	4	BOLT, Hex, M10 x 55, 8.8, , ASN D508
12	140045	7	WASHER, SPRING, Belleville, M10,
13	100016	4	NUT, M10, Cl 8,
14	455805	1	BEARING, BALL,
15	9837215	2	FLANGE,
16	300388	4	BOLT, Hex, M12 x 25, 8.8,
17	84433157	1	SHAFT, , FOR CL560 ONLY, FOR CS540 ONLY
17	84075051	1	SHAFT, , FOR CS640, CS660 ONLY
18	170012	1	KEY,
19	323624	2	KEY,
20	36403	2	FLANGE,
21	84814912	1	BEARING, BALL,
22	43139	3	SCREW, M10x25
23	100020	1	NUT, M16, Cl 8,
24	140048	1	WASHER, SPRING, Belleville, M16,
25	84438562	1	INDICATOR,
26	322297	1	SPRING,
27	378245	3	WASHER, M12,
28	412126	2	NUT, LOCK, M12 x 1.75, Cl 8,
29	9706685	1	NUT, M12, Cl 8,
30	9602976	1	YOKE,
31	84076898	1	LEVER,
32	84439164	1	HANDLE GRIP,
33	9706704	1	BOLT, Hex, M10 x 35, 8.8, Full Thd,
34	100037	1	NUT, M10 x 1.5, Cl 8,
35	86629541	1	BOLT, Hex, M12 x 40, 8.8, Full Thd,
36	84073933	1	BELT, TRANSMISSION,
37	378246	1	WASHER, 16MM
38	84814021	1	WHEEL, IDLER,
39	9513986	1	BUSHING,
40	84074911	1	BOLT, Hex, M12 x 200, 12.9, M12x200
41	321246	1	BOLT, Hex, M16 x 120, 8.8,
42	378244	1	WASHER, M10,

14.212(01) CONCAVE, ADJUSTMENT

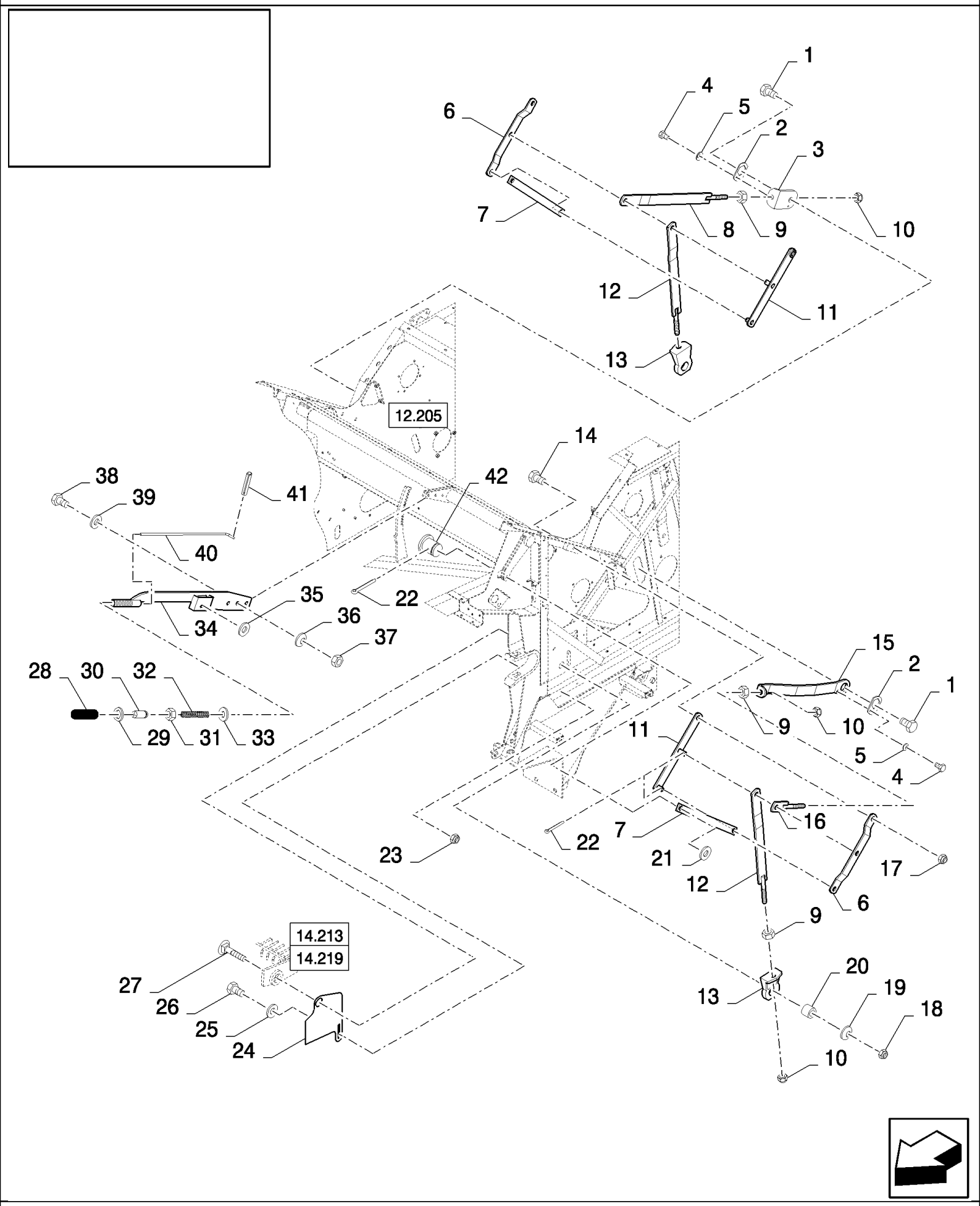

14.212(01) CONCAVE, ADJUSTMENT

ссылка	Номер детали	Кол-во	Описание
1	382101	2	BOLT, Hex, M20 x 80, 8.8,
2	434568	2	PLATE, LOCKING, {PP:80434568}
3	84431065	1	BRACKET, , BSN C511
3	87515310	1	BRACKET, , ASN D512
4	378056	2	BOLT, Hex, M6 x 10, 8.8, Full Thd,
5	322357	2	WASHER, SPRING, Belleville, M6,
6	80450358	2	LEVER,
7	84073937	2	LEVER,
8	84073915	1	LEVER,
9	100020	4	NUT, M16, Cl 8,
10	412066	4	NUT, LOCK, M16 x 2, Cl 8, M16
11	84073630	2	LEVER,
12	84073647	2	LEVER,
13	748975	2	SUPPORT,
14	120090	2	BOLT, Hex, M16 x 50, 8.8,
15	84431033	1	LEVER, , BSN C511
15	87515304	1	LEVER, , ASN D512
16	84431035	1	LEVER,
17	86000441	2	NUT, LOCK, M16 x 2, Cl 8,
18	412180	2	NUT, LOCK, M20 x 2.5, Cl 8, M20
19	322359	2	WASHER, SPRING, Belleville, M20,
20	84072025	2	BUSHING,
21	140090	2	WASHER, 17MM
22	130007	6	PIN, SPLIT (COTTER), M4 x 25,
23	86629542	2	NUT, LOCK, M8 x 1.25, Cl 8,
24	84431052	2	PLATE,
25	378243	2	WASHER, M8,
26	120104	2	BOLT, Hex, M8 x 20, 8.8,
27	84007392	2	BOLT, CARRIAGE, Short NK, M20 x 100, Cl8.8, M20x100
28	332749	1	HANDLE GRIP,
29	129979	1	O-RING, -115, 70 Duro, .674" ID x .103" Thk,
30	9818347	1	PUSH BUTTON,
31	89706690	1	NUT, M8, Cl 8,
32	84441780	1	SPRING,
33	84441758	1	WASHER,
34	84075496	1	LEVER,
35	140016	1	WASHER, M8 x 16 x 1.6,
36	140046	3	WASHER, SPRING, Belleville, M12,
37	9706685	3	NUT, M12, Cl 8,
38	86629541	3	BOLT, Hex, M12 x 40, 8.8, Full Thd,
39	140018	3	WASHER, M12 x 24 x 2.5,
40	84075419	1	ROD,
41	300865	1	PIN, LOCK, M3 x 20, Slotted,
42	380840	2	PIN, CLEVIS, M16 x 30,

14.213(01) CONCAVE, DRUM

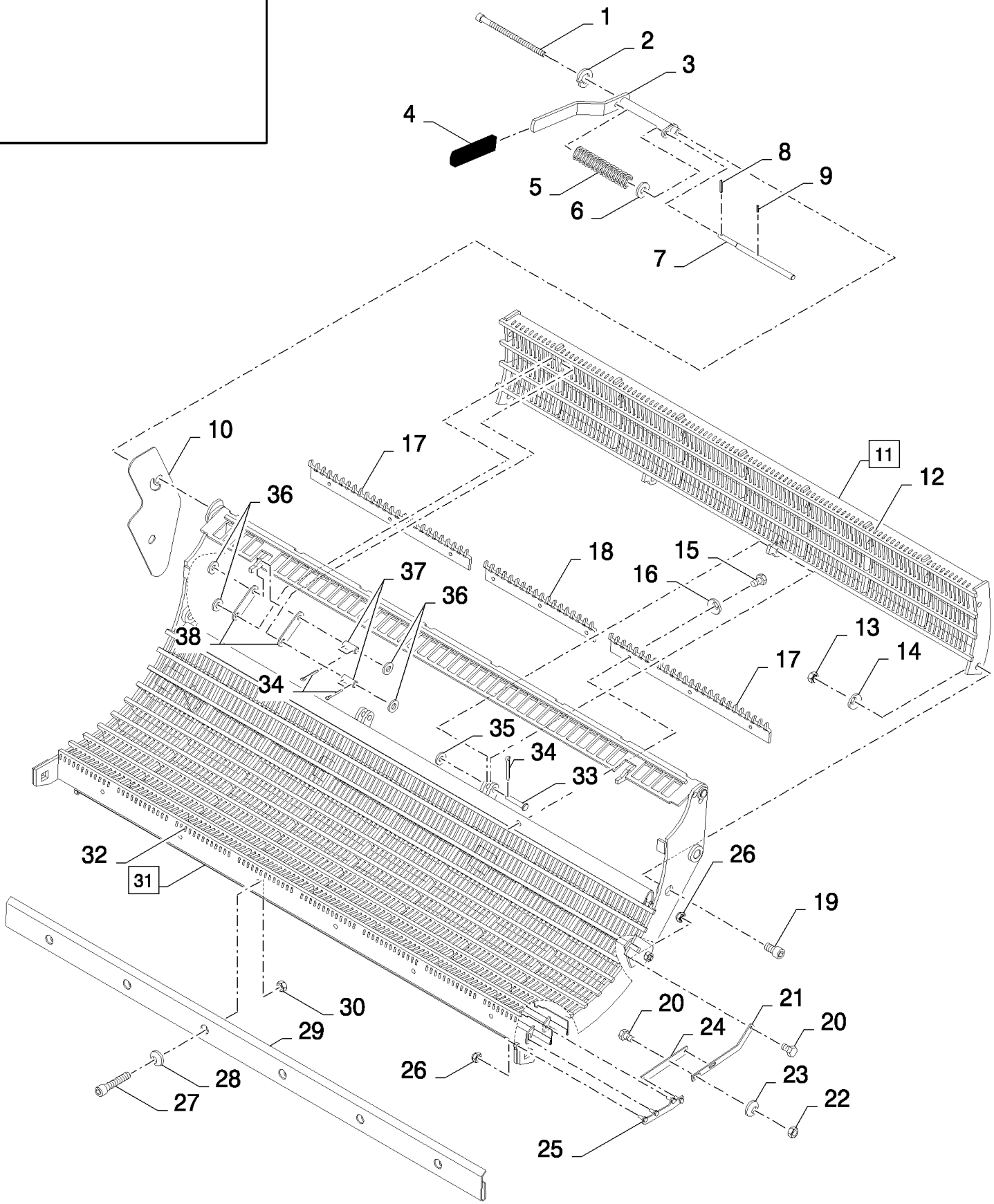

CS660 COMBINE BASE UNIT (1/03-) - Threshing

14.213(01) CONCAVE, DRUM

ссылка	Номер детали	Кол-во	Описание
1	84077695	1	SCREW, M12x200
2	412123	1	WASHER, LOCK, M12,
3	84072041	1	LEVER,
4	84439164	1	HANDLE GRIP,
5	321215	1	SPRING, {PP:80321215}
6	84439368	1	WASHER, 12.5MM
7	84072023	1	SHAFT,
8	9823343	1	PIN, LOCK, {PP:89823343} M5 x 65, Slotted,
9	300865	1	PIN, LOCK, {PP:80300865} M3 x 20, Slotted,
10	84442865	1	PLATE, , FOR CL560 ONLY, WITHOUT ROTARY SEPARATOR, FOR CS520, CS540, CS640 ONLY
10	84431177	1	PLATE, , FOR CL560 ONLY, FOR CS540, CS640, CS660 ONLY, WITH ROTARY SEPARATOR
11	84433026	1	CONCAVE, (12), FOR CL560 ONLY, FOR CS520, CS540 ONLY
11	84071997	1	CONCAVE, (12), FOR CS640, CS660 ONLY
12	84071701	78	WIRE, RETAINING, , FOR CS520, CS540 ONLY, FOR CL560 ONLY
12	84071701	96	WIRE, RETAINING, , FOR CS640, CS660 ONLY
13	100020	2	NUT, M16, Cl 8,
14	140048	2	WASHER, SPRING, Belleville, M16,
15	120104	AR	BOLT, Hex, M8 x 20, 8.8,
16	322358	AR	WASHER, SPRING, Belleville, M8,
17	84432976	2	RAKE,
18	84433062	1	RAKE, , FOR CS520, CS540 ONLY, FOR CL560 ONLY
18	84431562	1	RAKE, , FOR CS640, CS660 ONLY
19	84077750	2	SCREW, M16x30
20	120100	6	BOLT, Hex, M6 x 20, 8.8,
21	84443709	2	LEVER,
22	15896221	4	NUT, M6, Cl 10,
23	322357	4	WASHER, SPRING, Belleville, M6,
24	84443708	2	LEVER,
25	84443710	2	LEVER,
26	353308	10	NUT, LOCK, M6 x 1, Cl 8,
27	120052	6	SCREW, Hex Soc Hd, M10 x 25, 8.8,
28	140045	6	WASHER, SPRING, Belleville, M10,
29	84432701	1	SHEET, FRONT, , FOR CS520, CS540 ONLY, FOR CL560 ONLY
29	84072086	1	SHEET, FRONT, , FOR CS640, CS660 ONLY
30	100016	6	NUT, M10, Cl 8,
31	84432935	1	CONCAVE, (32), FOR CL560 ONLY, FOR CS540 ONLY, WITH ROTARY SEPARATOR
31	84072139	1	CONCAVE, (32), WITH ROTARY SEPARATOR, FOR CS640, CS660 ONLY
31	84442926	1	CONCAVE, (32), FOR CS520, CS540 ONLY, FOR CL560 ONLY, WITHOUT ROTARY SEPARATOR
31	84443560	1	CONCAVE, (32), WITHOUT ROTARY SEPARATOR, FOR CS640 ONLY
32	84071705	82	WIRE, RETAINING, , FOR CL560 ONLY, FOR CS520, CS540 ONLY
32	84071705	100	WIRE, RETAINING, , FOR CS640, CS660 ONLY
33	321018	2	PIN, CLEVIS, {PP:80321018} M12 x 40,
34	130003	10	PIN, SPLIT (COTTER), {PP:80130003} M3.2 x 20,
35	86511324	2	WASHER, M12 x 24 x 2.5,
36	378245	8	WASHER, M12,

14.213(01) CONCAVE, DRUM

ссылка	Номер детали	Кол-во	Описание
37	80324907	4	PIN, ROLL,
38	84441795	4	LEVER, , WITH ROTARY SEPARATOR
38	84446253	4	LEVER, , WITHOUT ROTARY SEPARATOR

14.214(01) DRUM DRIVE

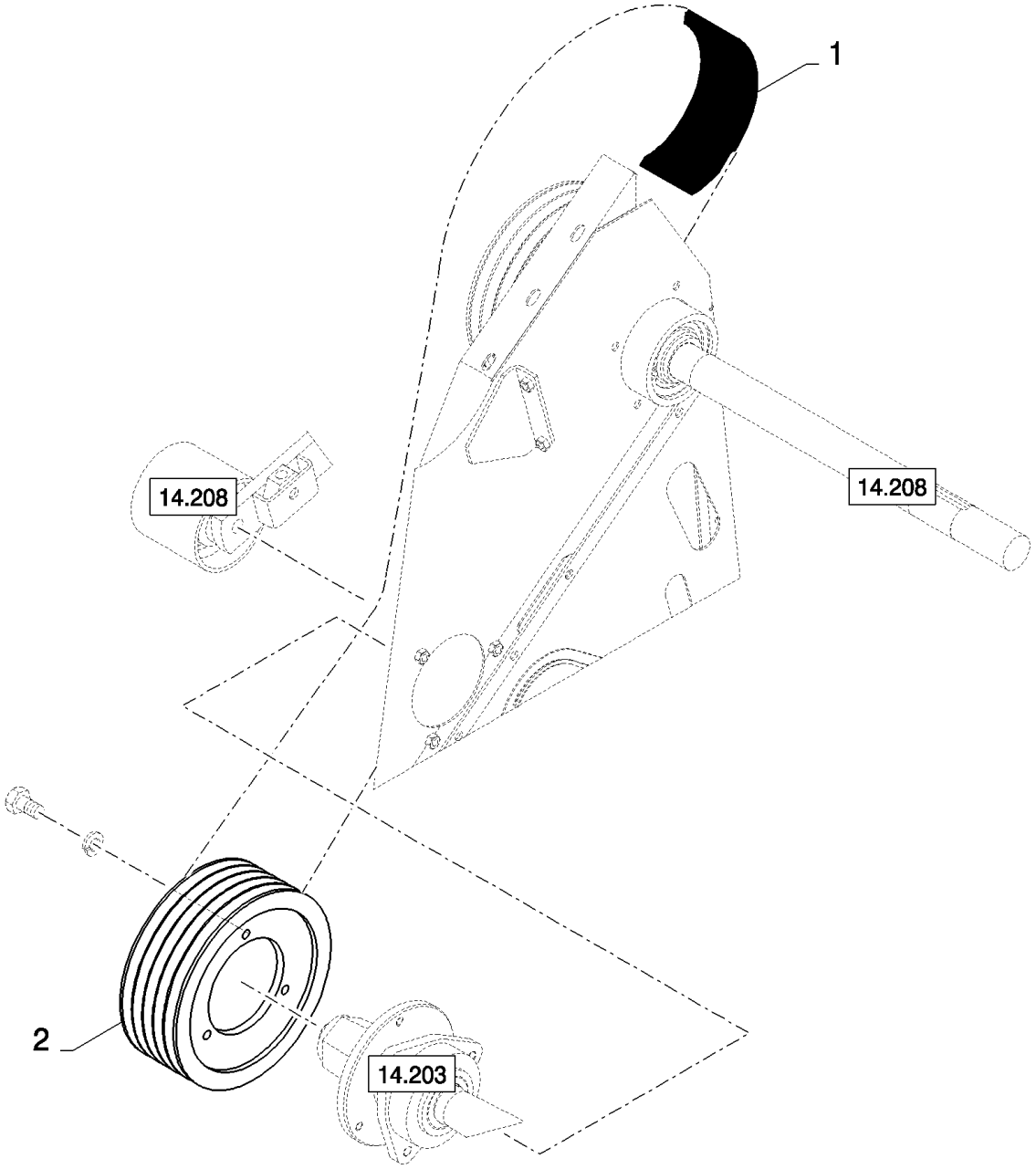

14.214(01) DRUM DRIVE

ссылка	Номер детали	Кол-во	Описание
1	84072772	1	BELT, TRANSMISSION,
1	84072815	1	BELT, TRANSMISSION, , LOW DRUM SPEED
2	84334104	1	PULLEY,
2	84334120	1	PULLEY, , LOW DRUM SPEED

14.215(01) DE-AWNING SLATS

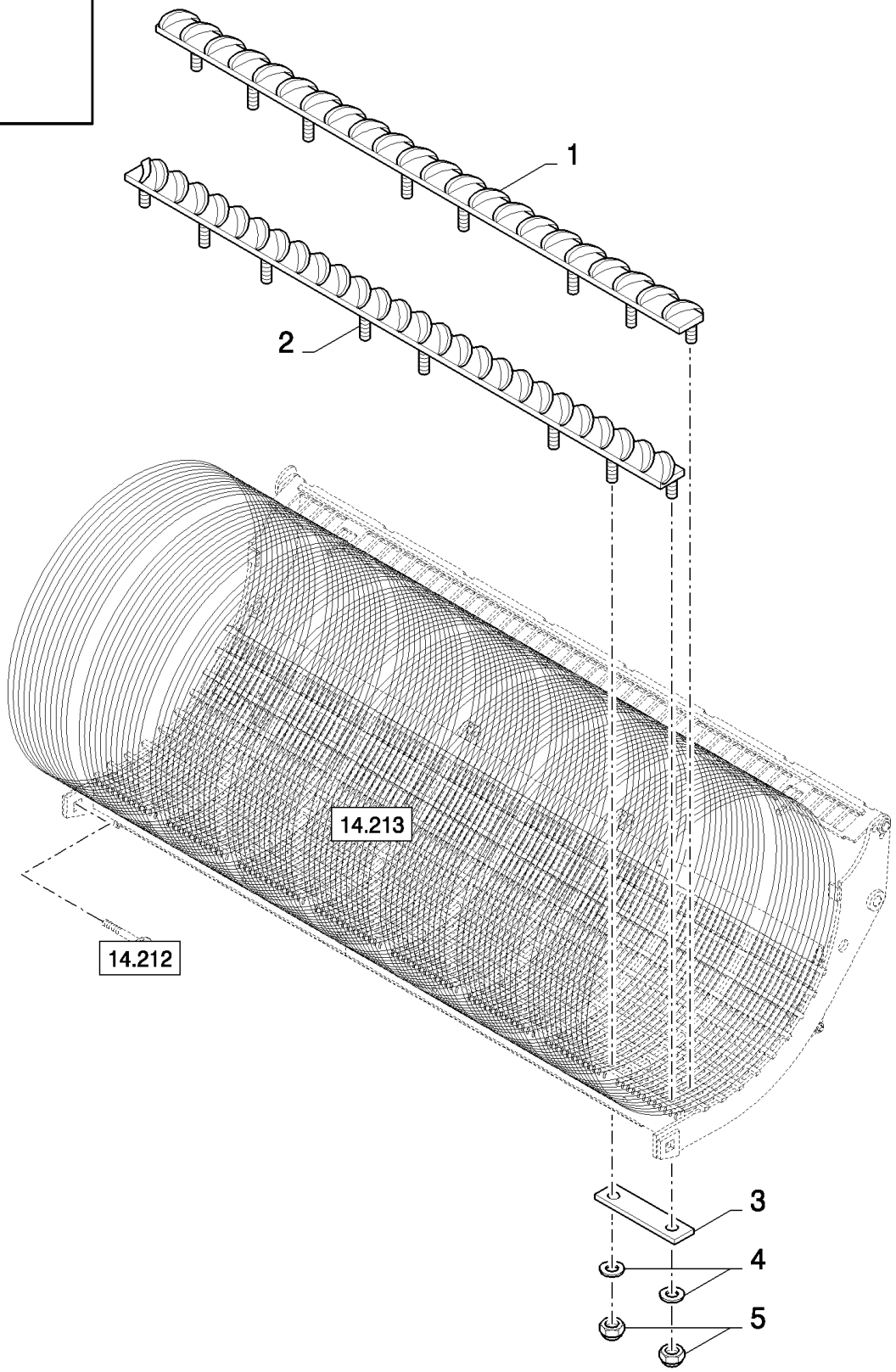

14.215(01) DE-AWNING SLATS

ссылка	Номер детали	Кол-во	Описание
1	84015711	1	DE AWNER, , FOR CS520, CS540 ONLY, FOR CL560 ONLY
1	84814227	1	DE AWNER, , FOR CS640, CS660 ONLY
2	84015713	1	DE AWNER, , FOR CS520, CS540 ONLY, FOR CL560 ONLY
2	84814223	1	DE AWNER, , FOR CS640, CS660 ONLY
3	9832998	6	PLATE, FIXING, {PP:89832998}
4	140041	16	WASHER, M8 x 28 x 3,
5	412250	16	NUT, LOCK, M8 x 1.25, Cl 8,

14.216(01) DRUM VARIATOR

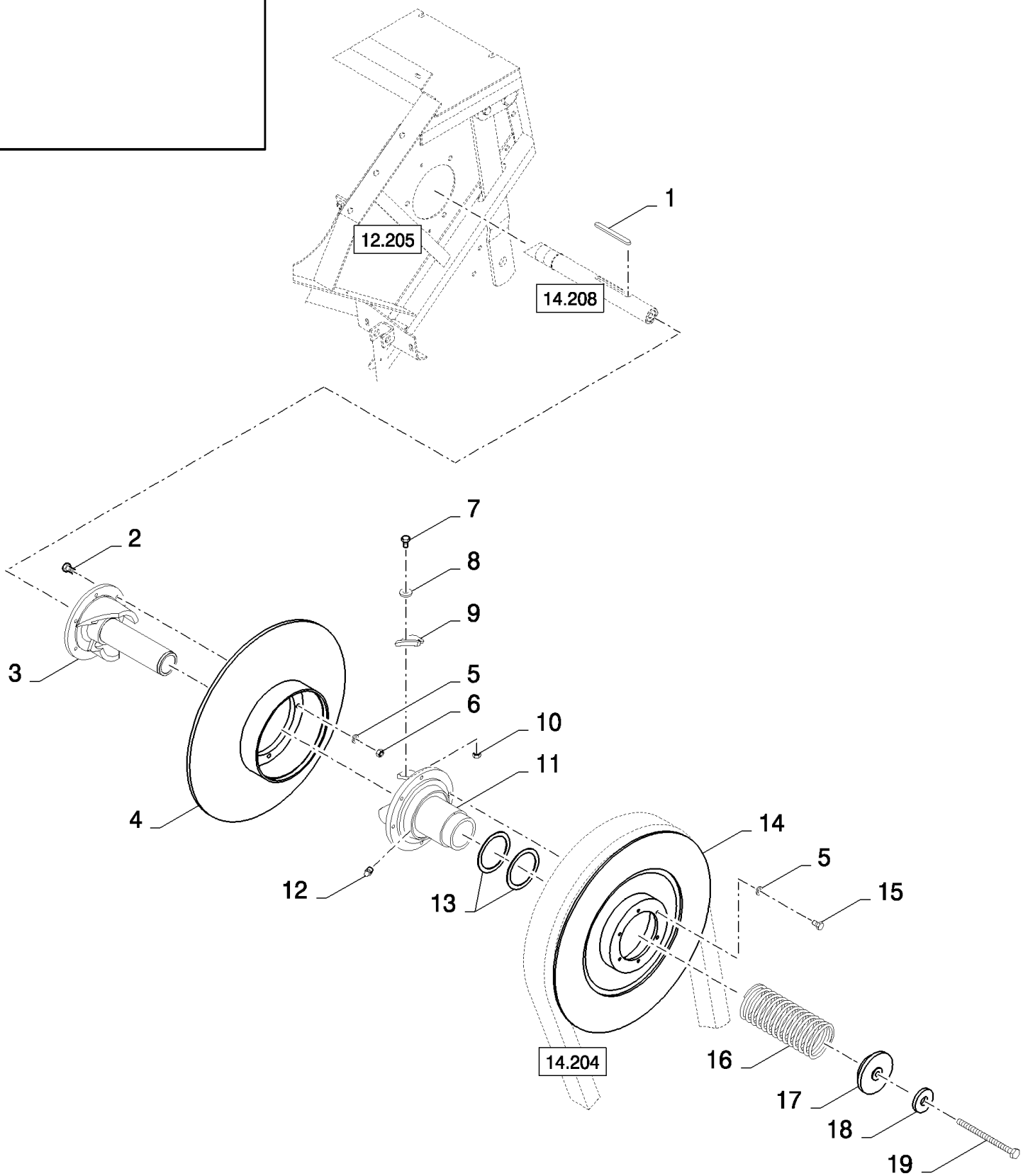

14.216(01) DRUM VARIATOR

ссылка	Номер детали	Кол-во	Описание
1	444889	1	KEY, {PP:80444889}
2	120112	6	BOLT, Hex, M10 x 40, 8.8, Full Thd,
3	84072287	1	HUB,
4	84334199	1	DISC,
5	140045	12	WASHER, SPRING, Belleville, M10,
6	100016	6	NUT, M10, Cl 8,
7	43117	6	BOLT, Hex, M6 x 30, 8.8,
8	140015	6	WASHER, {PP:80140015} 6MM
9	84072684	2	CAM,
10	353308	6	NUT, LOCK, M6 x 1, Cl 8,
11	84334439	1	HUB,
12	321204	1	NIPPLE, LUBE, {PP:80321204} M6 x 1, 16mm lg,
13	84072991	2	RING,
14	84334197	1	DISC,
15	43140	6	BOLT, Hex, M10 x 30, 8.8, Full Thd,
16	84431523	1	SPRING,
17	84334193	1	RING,
18	84058945	1	WASHER,
19	84072773	1	BOLT, Hex, M16 x 240, 8.8, Full Thd, M16x240

14.217(01) ROTARY SEPARATOR CONCAVE ADJUSTMENT

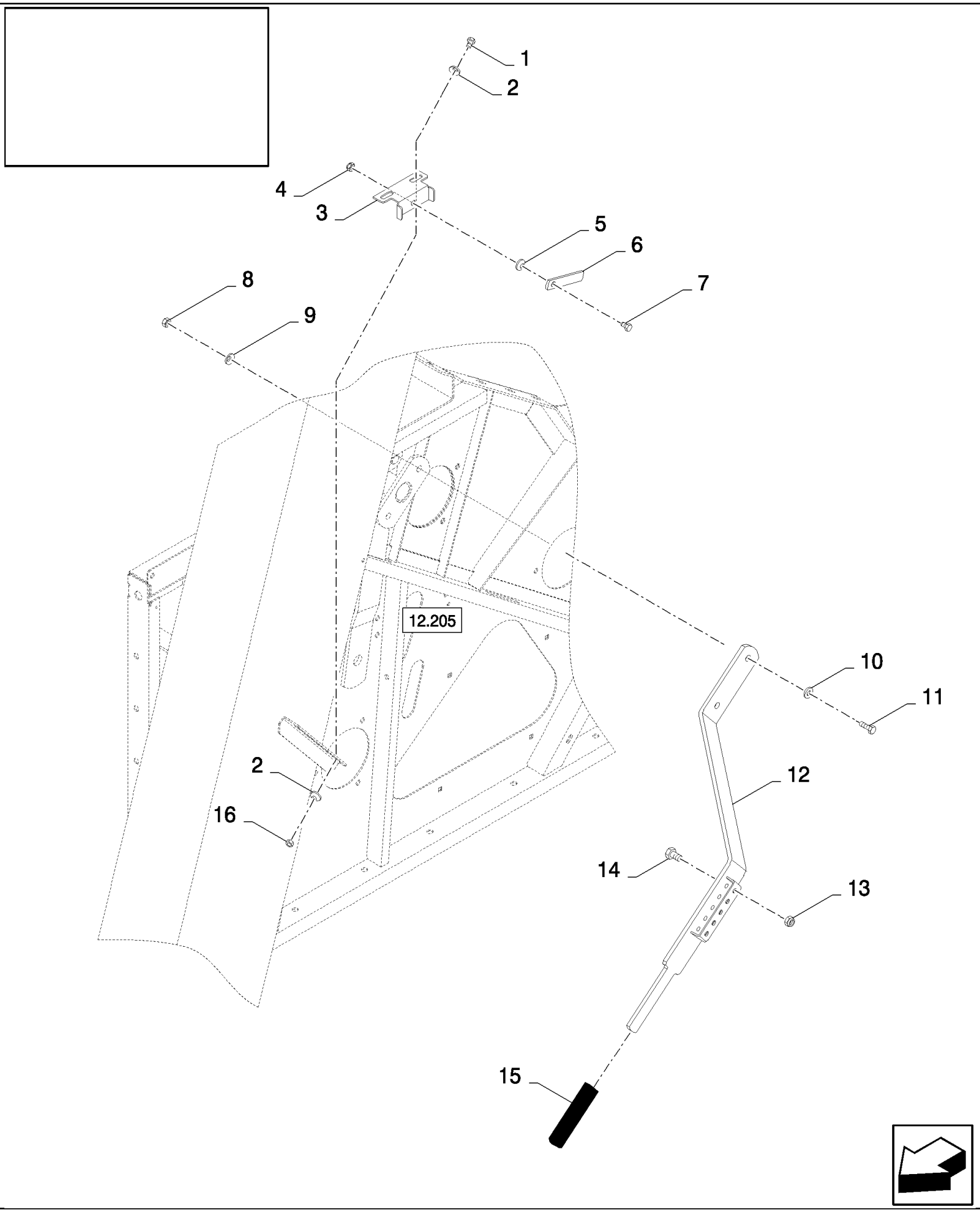

14.217(01) ROTARY SEPARATOR CONCAVE ADJUSTMENT

ссылка	Номер детали	Кол-во	Описание
1	43138	2	BOLT, Hex, M10 x 20, 8.8, Full Thd,
2	140045	4	WASHER, SPRING, Belleville, M10,
3	84017313	1	SUPPORT,
4	100037	1	NUT, M10 x 1.5, Cl 8,
5	80300368	1	WASHER,
6	84017312	1	PLATE, COVER,
7	43139	1	SCREW, {PP:80043139} M10x25
8	9706685	2	NUT, M12, Cl 8,
9	140046	2	WASHER, SPRING, Belleville, M12,
10	140018	2	WASHER, M12 x 24 x 2.5,
11	86629541	2	BOLT, Hex, M12 x 40, 8.8, Full Thd,
12	84437245	1	LEVER, , BSN C375
12	84453729	1	LEVER, , ASN D376
13	86629542	5	NUT, LOCK, M8 x 1.25, Cl 8, , BSN C375
14	43129	5	BOLT, Hex, M8 x 40, 8.8, , BSN C375
15	84439164	1	HANDLE GRIP,
16	100016	2	NUT, M10, Cl 8,

14.219(01) MAIZE CONCAVE, DRUM

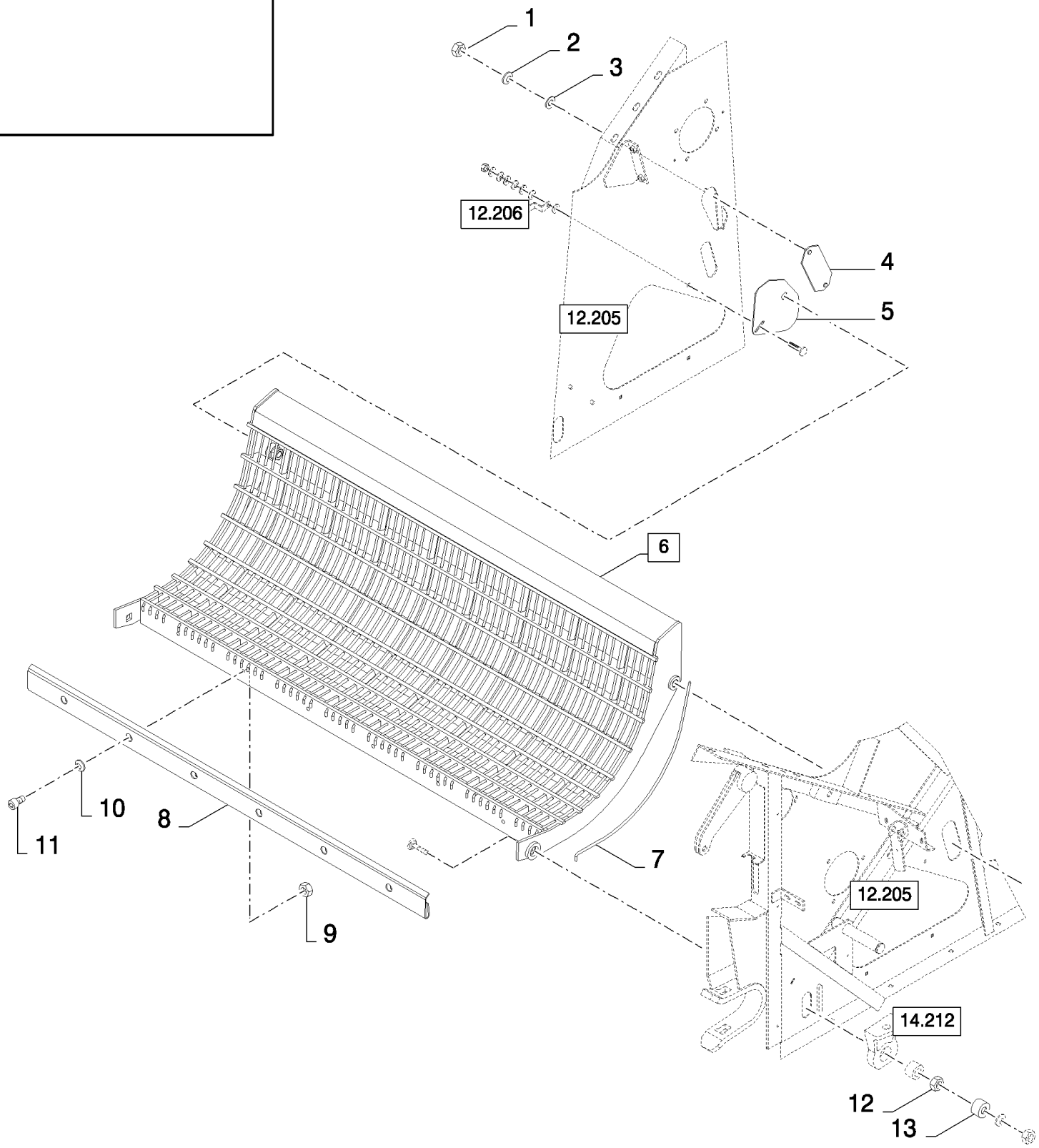

14.219(01) MAIZE CONCAVE, DRUM

ссылка	Номер детали	Кол-во	Описание
1	15896221	2	NUT, M6, Cl 10,
2	322357	2	WASHER, SPRING, Belleville, M6,
3	140040	2	WASHER, M6 x 22 x 2,
4	84432831	1	PLATE, COVER, , BSN C301
4	84443834	1	PLATE, COVER, , ASN D302
5	84431053	1	PLATE, COVER, , BSN C301
5	84443839	1	PLATE, COVER, , ASN D302
6	84432761	1	CONCAVE, (7), FOR CS520, CS540 ONLY, FOR CL560 ONLY
6	84076873	1	CONCAVE, (7), FOR CS640, CS660 ONLY
7	84076567	41	WIRE, RETAINING, , FOR CS520, CS540 ONLY, FOR CL560 ONLY
7	84076567	49	WIRE, RETAINING, , FOR CS640, CS660 ONLY
8	84432701	1	SHEET, FRONT, , FOR CS520, CS540 ONLY, FOR CL560 ONLY
8	84072086	1	SHEET, FRONT, , FOR CS640, CS660 ONLY
9	100016	6	NUT, M10, Cl 8,
10	140045	6	WASHER, SPRING, Belleville, M10,
11	120052	6	SCREW, Hex Soc Hd, M10 x 25, 8.8,
12	9706694	2	NUT, M20, Cl 8, , BSN C419
12	380424	2	NUT, LOCK, M20 x 2.5, Cl 8, , ASN D420
13	84007394	2	BUSHING,

14.220(01) RICE DRUM 56 AND 84

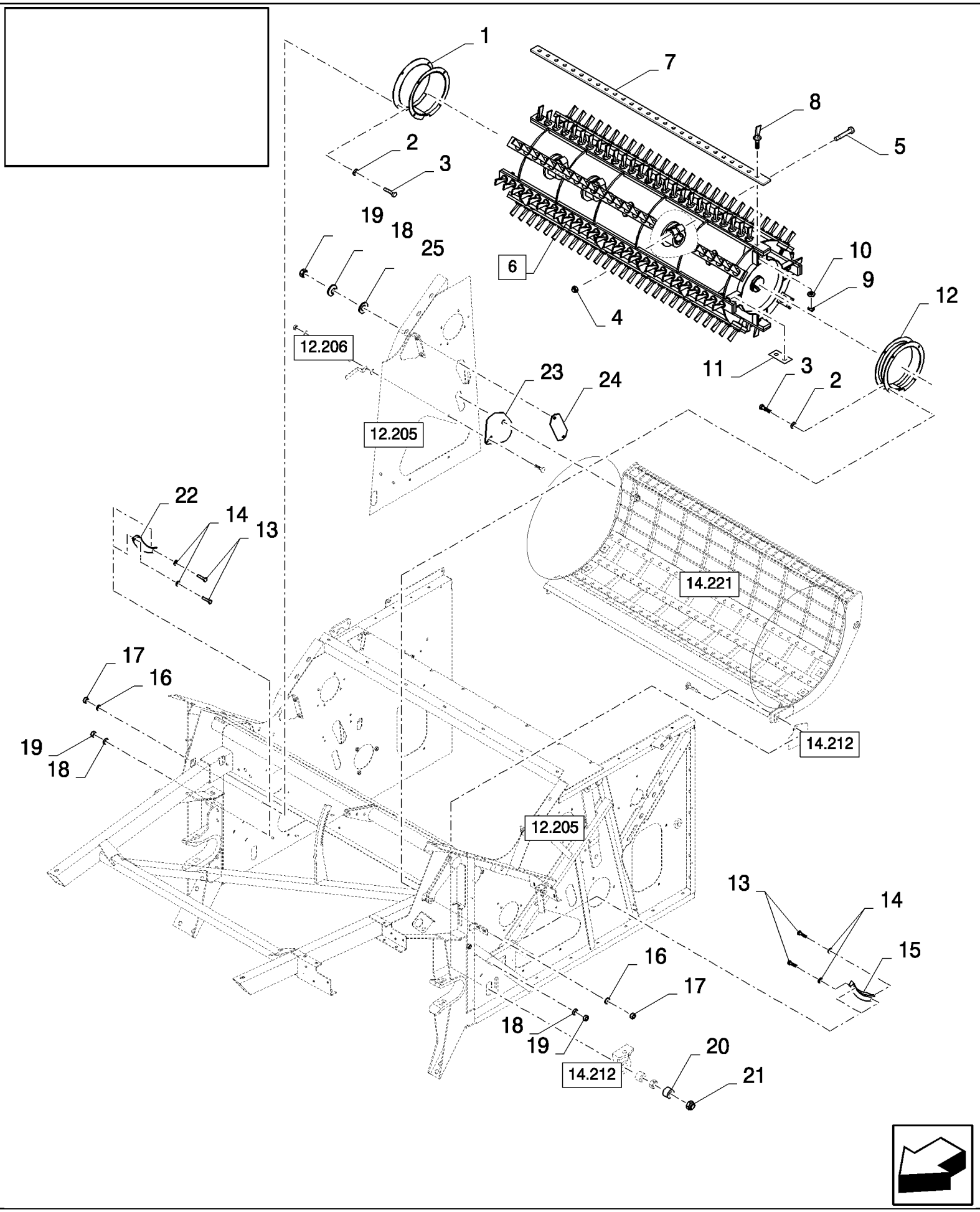

CS660 COMBINE BASE UNIT (1/03-) - Threshing

14.220(01) RICE DRUM 56 AND 84

ссылка	Номер детали	Кол-во	Описание
1	80424748	1	SHIELD,
2	140016	6	WASHER, M8 x 16 x 1.6,
3	120104	6	BOLT, Hex, M8 x 20, 8.8,
4	86000441	4	NUT, LOCK, M16 x 2, Cl 8,
5	350616	4	BOLT, Hex, M16 x 90, 8.8,
6	84452140	1	DRUM, (7 to 11), FOR CS540 ONLY, FOR 56MM ONLY
6	84452689	1	DRUM, (7 to 11), FOR CS540 ONLY, FOR 84MM ONLY
6	84452125	1	DRUM, (7 to 11), FOR 56MM ONLY, FOR CS640, CS660 ONLY
6	84452682	1	BELL HOUSING, (7 to 11), FOR CS640, CS660 ONLY, FOR 84MM ONLY
7	80399645	4	BAR, , FOR 56MM ONLY, FOR CS540 ONLY
7	84452428	8	BAR, , FOR CS540 ONLY, FOR 84MM ONLY
7	80411043	8	BAR, , FOR 56MM ONLY, FOR CS640, CS660 ONLY
7	84452471	8	BAR, , FOR CS640, CS660 ONLY, FOR 84MM ONLY
8	396935	180	TOOTH, RICE, {PP:80396935} , FOR 56MM ONLY, FOR CS540 ONLY
8	396935	120	TOOTH, RICE, {PP:80396935} , FOR CS540 ONLY, FOR 84MM ONLY
8	396935	216	TOOTH, RICE, {PP:80396935} , FOR 56MM ONLY, FOR CS640, CS660 ONLY
8	396935	144	TOOTH, RICE, {PP:80396935} , FOR CS640, CS660 ONLY, FOR 84MM ONLY
9	86000441	AR	NUT, LOCK, M16 x 2, Cl 8,
10	394631	AR	WASHER, {PP:80394631} 17MM
11	331138	AR	PLATE, {PP:80331138} , FOR 56MM ONLY
11	84452449	AR	PLATE, , FOR 84MM ONLY
12	84452645	1	PROTECTING COVER,
13	120100	4	BOLT, Hex, M6 x 20, 8.8,
14	412649	4	WASHER, SPRING, Belleville, M6,
15	354592	1	SHIELD, {PP:80354592}
16	322358	6	WASHER, SPRING, Belleville, M8,
17	89706690	6	NUT, M8, Cl 8,
18	322357	6	WASHER, SPRING, Belleville, M6,
19	15896221	6	NUT, M6, Cl 10,
20	84007394	2	BUSHING,
21	412180	2	NUT, LOCK, M20 x 2.5, Cl 8, M20, BSN C495
21	380424	2	NUT, LOCK, M20 x 2.5, Cl 8, , ASN D496
22	354593	1	SHIELD,
23	84443839	1	PLATE, COVER,
24	84443834	1	PLATE, COVER,
25	140040	2	WASHER, M6 x 22 x 2,

14.221(01) SPIKE TOOTH CONCAVE 56 AND 84

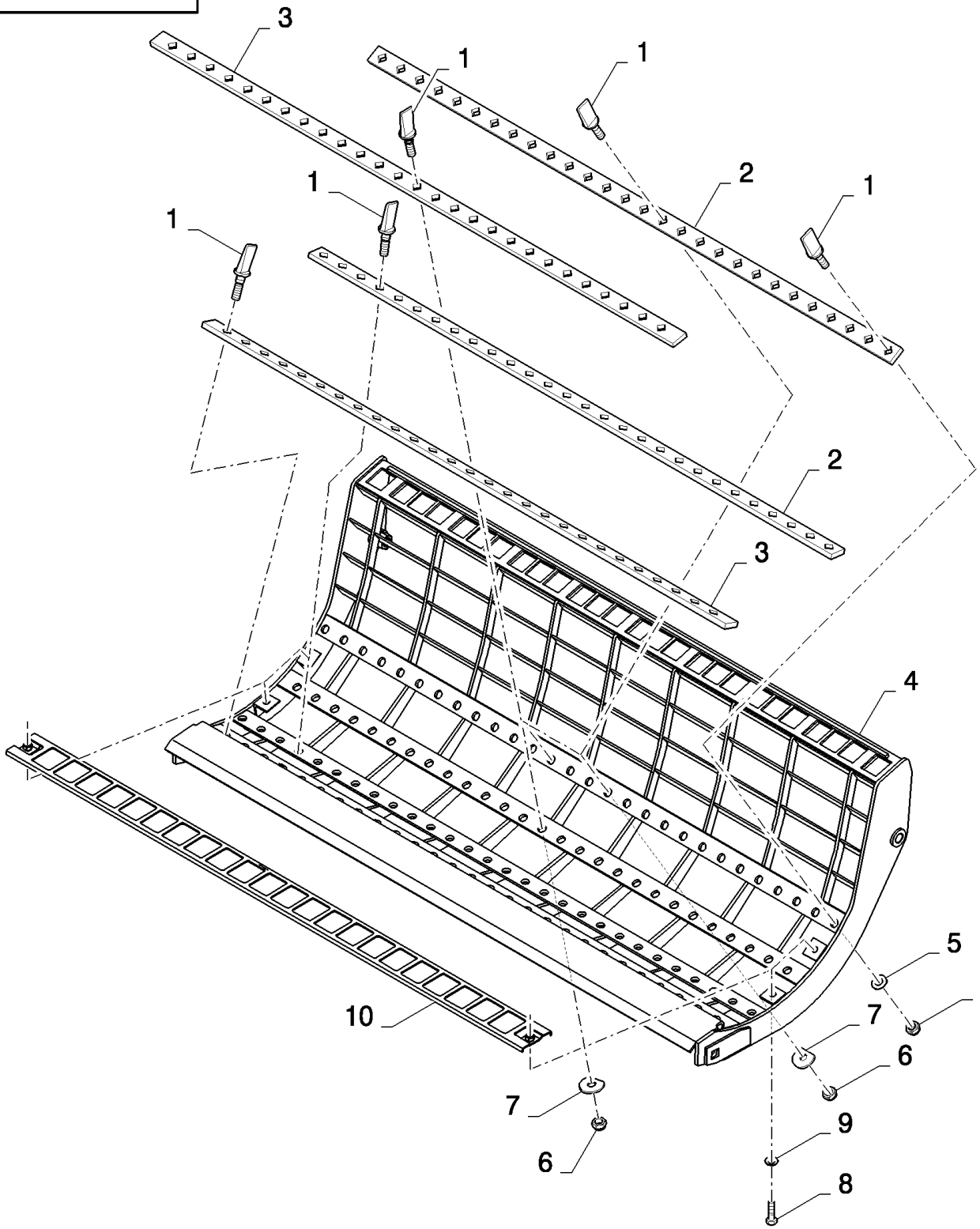

CS660 COMBINE BASE UNIT (1/03-) - Threshing

14.221(01) SPIKE TOOTH CONCAVE 56 AND 84

ссылка	Номер детали	Кол-во	Описание
1	396935	68	TOOTH, RICE, {PP:80396935} , FOR 56MM ONLY, FOR CS540 ONLY
1	396935	45	TOOTH, RICE, {PP:80396935} , FOR CS540 ONLY, FOR 84MM ONLY
1	396935	81	TOOTH, RICE, {PP:80396935} , FOR 56MM ONLY, FOR CS640, CS660 ONLY
1	396935	54	TOOTH, RICE, {PP:80396935} , FOR CS640, CS660 ONLY, FOR 84MM ONLY
2	399656	2	LATH, {PP:80399656} , FOR 56MM ONLY, FOR CS540 ONLY
2	80922581	2	PLATE, FIXING, , FOR CS540 ONLY, FOR 84MM ONLY
2	411298	2	PLATE, FIXING, {PP:80411298} , FOR 56MM ONLY, FOR CS640, CS660 ONLY
2	9502466	2	PLATE, FIXING, {PP:89502466} , FOR CS640, CS660 ONLY, FOR 84MM ONLY
3	399655	2	LATH, {PP:80399655} , FOR 56MM ONLY, FOR CS540 ONLY
3	80922586	2	PLATE, FIXING, , FOR CS540 ONLY, FOR 84MM ONLY
3	411304	2	PLATE, FIXING, {PP:80411304} , FOR 56MM ONLY, FOR CS640, CS660 ONLY
3	84818355	2	PLATE, FIXING, , FOR CS640, CS660 ONLY, FOR 84MM ONLY
4	84452141	1	CONCAVE, , FOR 56MM ONLY, FOR CS540 ONLY
4	84452244	1	CONCAVE, , FOR CS540 ONLY, FOR 84MM ONLY
4	84437361	1	CONCAVE, , FOR 56MM ONLY, FOR CS640, CS660 ONLY
4	84452253	1	CONCAVE, , FOR CS640, CS660 ONLY, FOR 84MM ONLY
5	394631	AR	WASHER, {PP:80394631} 17MM
6	86000441	AR	NUT, LOCK, M16 x 2, Cl 8,
7	333041	AR	WASHER, {PP:80333041} 16.5MM
8	43138	4	BOLT, Hex, M10 x 20, 8.8, Full Thd,
9	140045	4	WASHER, SPRING, Belleville, M10,
10	84038643	2	GRILLE, , FOR CS540 ONLY
10	84038642	2	GRILLE, , FOR CS640, CS660 ONLY

CLEANING	**NETTOYAGE**	**LIMPIEZA**	**RENSNING**
PULITURA	**REINIGUNG**	**LIMPEZA**	**REINIGING**

SEC. 15

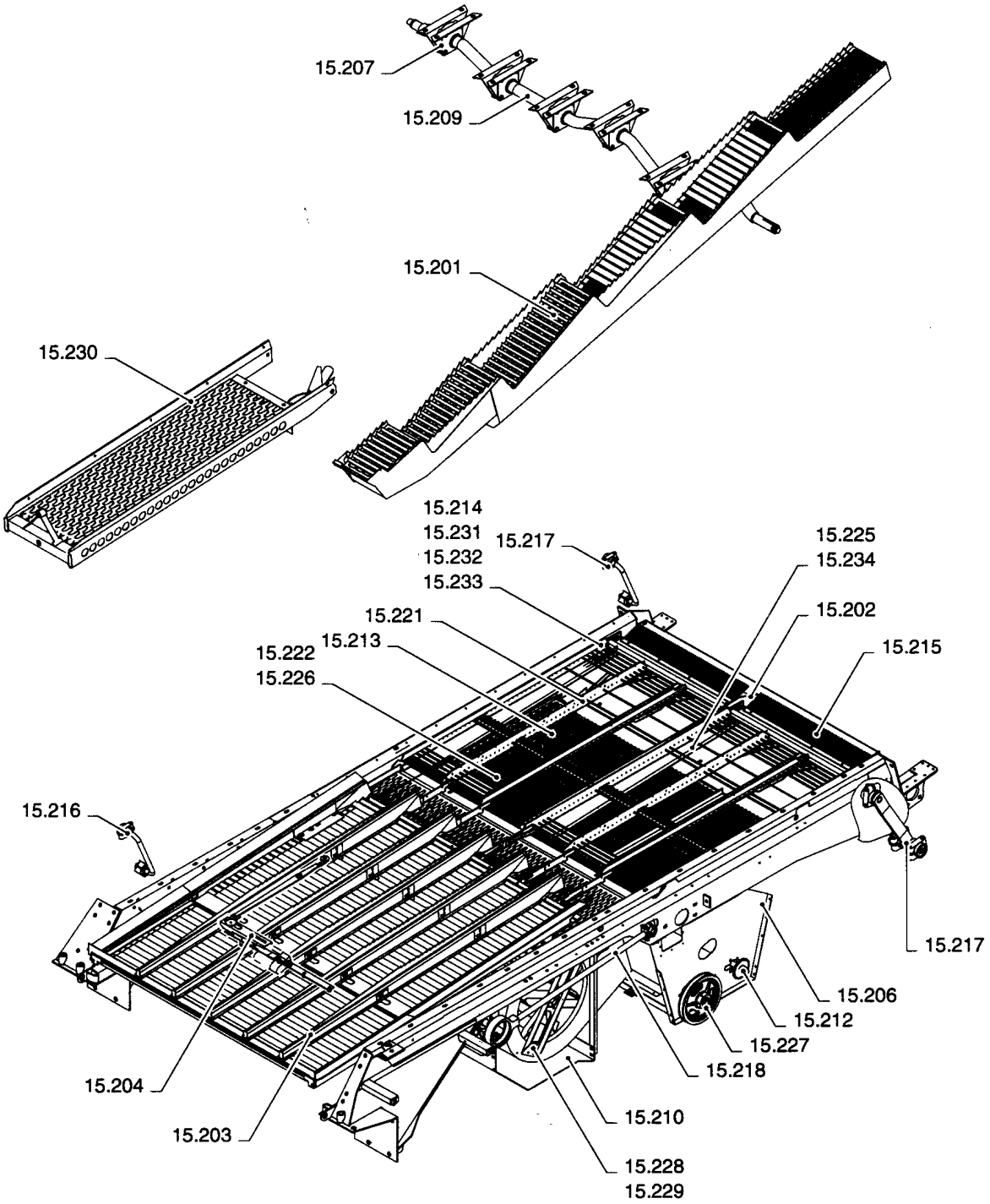

ссылка	Номер детали	Кол-во	Описание

CLEANING	**NETTOYAGE**	**LIMPIEZA**	**RENSNING**
PULITURA	**REINIGUNG**	**LIMPEZA**	**REINIGING**

SEC. 15

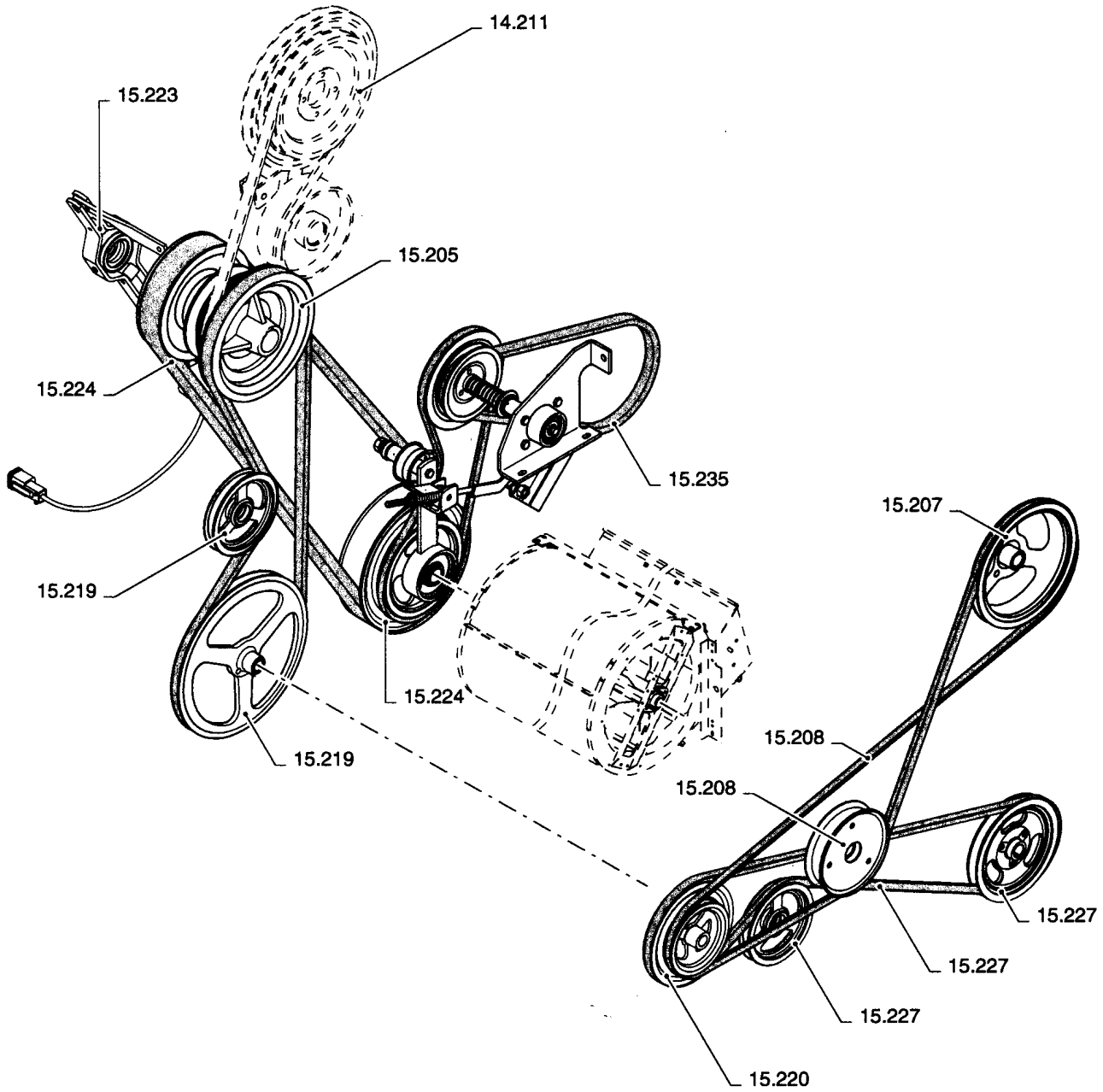

ссылка	Номер детали	Кол-во	Описание

15.201(01) STRAW WALKERS AND COVER PLATES

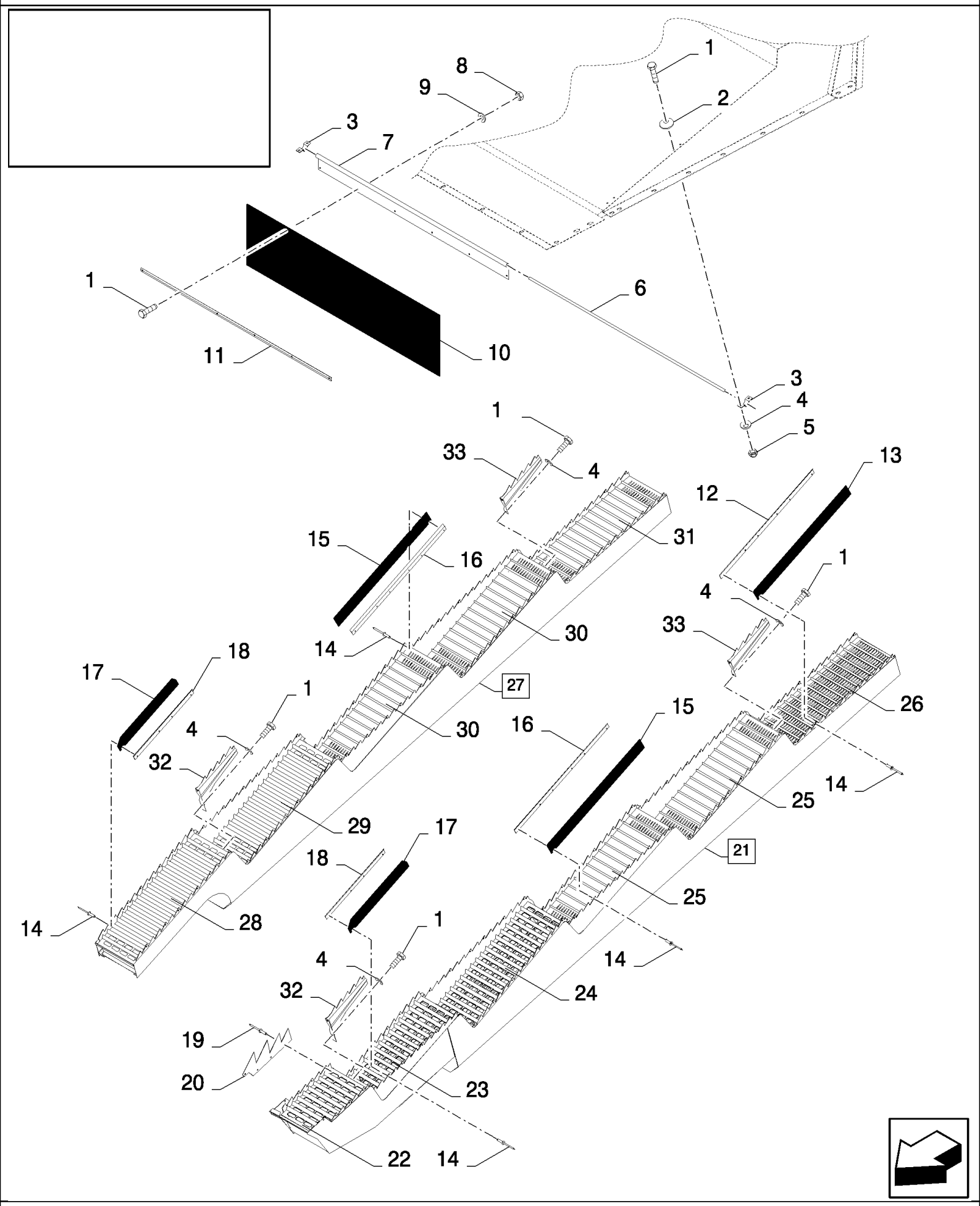

15.201(01) STRAW WALKERS AND COVER PLATES

ссылка	Номер детали	Кол-во	Описание
1	86508568	AR	BOLT, Hex, M6 x 16, 8.8,
2	412649	4	WASHER, SPRING, Belleville, M6,
3	84058757	2	COLLAR, RETAINER,
4	322357	4	WASHER, SPRING, Belleville, M6,
5	15896221	4	NUT, M6, Cl 10,
6	84058866	1	SHAFT, , FOR CS520, CS540 ONLY, FOR CL560 ONLY
6	84058867	1	SHAFT, , FOR CS640, CS660 ONLY
7	84058872	1	HINGE, , FOR CS520, CS540 ONLY, BSN C363
7	84453141	1	HINGE, , FOR CS520, CS540 ONLY, FOR CL560 ONLY, ASN D364
7	84058870	1	HINGE, , FOR CS640, CS660 ONLY, BSN C363
7	84453137	1	HINGE, , FOR CS640, CS660 ONLY, ASN D364
8	353308	AR	NUT, LOCK, M6 x 1, Cl 8,
9	140040	AR	WASHER, M6 x 22 x 2,
10	84058874	1	CANVAS, , FOR CS520, CS540 ONLY, FOR CL560 ONLY
10	84058875	1	CANVAS, , FOR CS640, CS660 ONLY
11	84058868	1	PLATE, FIXING, , FOR CS520, CS540 ONLY, FOR CL560 ONLY
11	84058869	1	PLATE, FIXING, , FOR CS640, CS660 ONLY
12	84431464	2	PLATE, FIXING,
13	84431465	2	CANVAS,
14	NSS	AR	NOT SERVICED SEPARATELY, Rivet
15	84434206	AR	CANVAS,
16	84057552	AR	PLATE, FIXING,
17	84065042	2	CANVAS,
18	84065041	2	PLATE, FIXING,
19	445394	AR	RIVET, {PP:80445394} Pop, M4.8 x 12.7, , FOR CL560 ONLY, WITHOUT ROTARY SEPARATOR, FOR CS520, CS540, CS640 ONLY
20	84442380	AR	CAM, , FOR CS520, CS540, CS640 ONLY, WITHOUT ROTARY SEPARATOR, FOR CL560 ONLY
21	84442327	AR	STRAW WALKER, (22 to 26), FOR CL560 ONLY, WITHOUT ROTARY SEPARATOR, FOR CS520, CS540, CS640 ONLY
22	84442271	1	LINER, METAL, , FOR CS520, CS540, CS640 ONLY, WITHOUT ROTARY SEPARATOR, FOR CL560 ONLY
23	84442279	1	LINER, METAL, , WITHOUT ROTARY SEPARATOR, FOR CS520, CS540, CS640 ONLY
23	84062228	1	LINER, METAL, , FOR CL560 ONLY
24	84056964	1	LINER, METAL, , FOR CL560 ONLY, FOR CS520, CS540, CS640 ONLY, WITHOUT ROTARY SEPARATOR
25	84062225	2	LINER, METAL, , WITHOUT ROTARY SEPARATOR, FOR CS520, CS540, CS640 ONLY, FOR CL560 ONLY
26	84072766	1	LINER, METAL, , FOR CL560 ONLY, FOR CS520, CS540, CS640 ONLY, WITHOUT ROTARY SEPARATOR
27	84072906	AR	STRAW WALKER, (28 to 31), FOR CS540, CS640, CS660 ONLY, WITH ROTARY SEPARATOR, BSN C319
27	84446951	AR	STRAW WALKER, (28 to 31), WITH ROTARY SEPARATOR, FOR CS540, CS640, CS660 ONLY, FOR CL560 ONLY, ASN D320
28	84072764	1	LINER, METAL, , FOR CL560 ONLY, FOR CS540, CS640, CS660 ONLY, WITH ROTARY SEPARATOR

15.201(01) STRAW WALKERS AND COVER PLATES

ссылка	Номер детали	Кол-во	Описание
29	84056964	1	LINER, METAL, , WITH ROTARY SEPARATOR, FOR CS540, CS640, CS660 ONLY, FOR CL560 ONLY
30	84062225	2	LINER, METAL, , FOR CL560 ONLY, FOR CS540, CS640, CS660 ONLY, WITH ROTARY SEPARATOR
31	84072766	1	LINER, METAL, , WITH ROTARY SEPARATOR, FOR CS540, CS640, CS660 ONLY, FOR CL560 ONLY
32	84446428	AR	RAKE,
33	84446407	AR	RAKE,

15.202(01) SHAKER SHOE

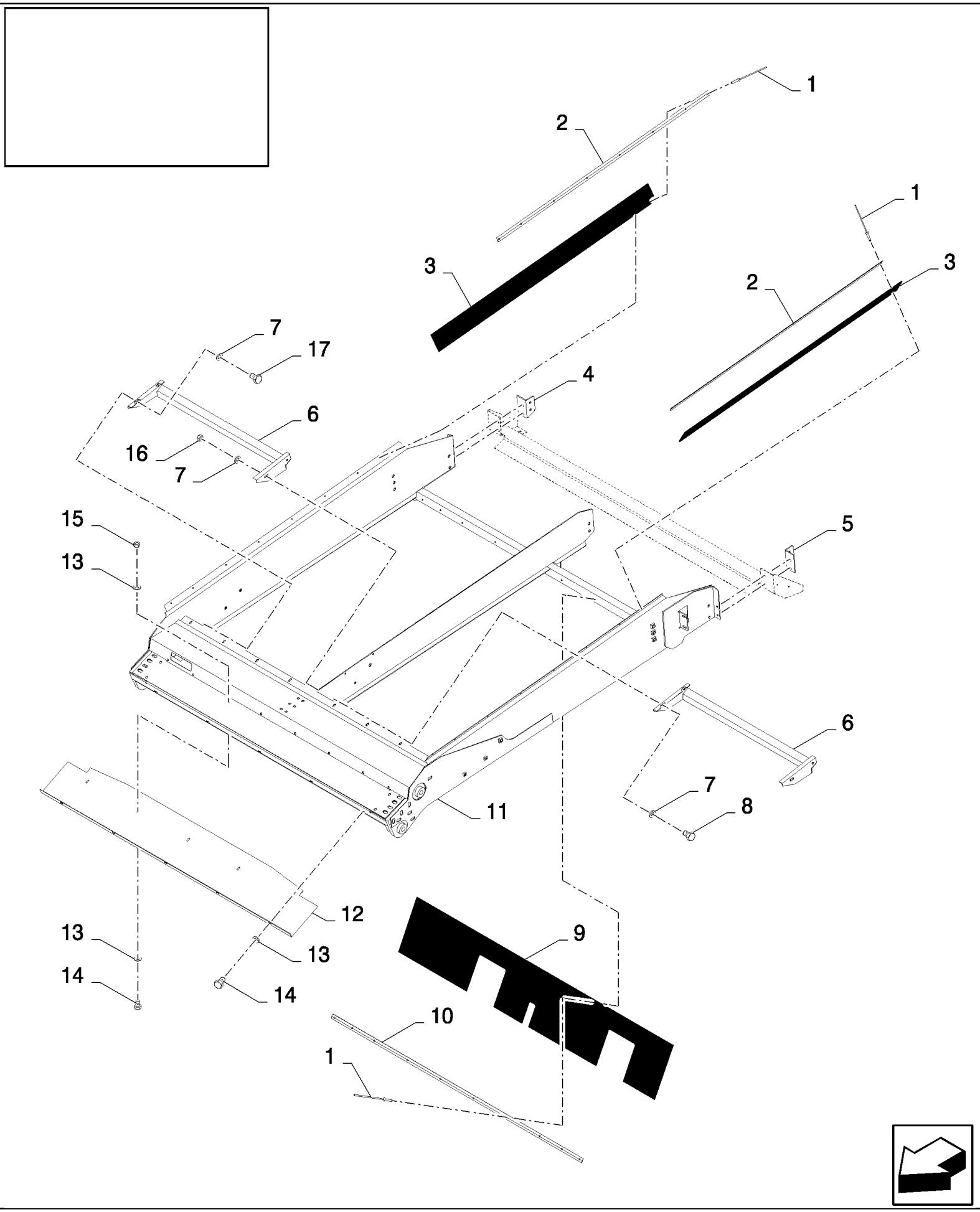

CS660 COMBINE BASE UNIT (1/03-) - Cleaning

15.202(01) SHAKER SHOE

ссылка	Номер детали	Кол-во	Описание
1	NSS	AR	NOT SERVICED SEPARATELY, Rivet
2	451800	2	PLATE, FIXING, , BSN C479
2	84461998	2	PLATE, FIXING, , ASN D480
3	9504162	2	O-RING, , BSN C479
3	84461979	2	CANVAS, , ASN D480
4	84441932	1	BRACKET, RH, FIXED SHOE, BSN C385
4	84457087	1	SUPPORT, , FIXED SHOE, ASN D386
5	84441931	1	BRACKET, LH, FIXED SHOE
6	84441961	1	SUPPORT, , FIXED SHOE, FOR CS520, CS540 ONLY, BSN C419
6	84458018	1	SUPPORT, , FOR CS520, CS540 ONLY, FIXED SHOE, FOR CL560 ONLY, ASN D420
6	84441950	2	SUPPORT, , FIXED SHOE, FOR CS640, CS660 ONLY, BSN C419
6	84455992	2	SUPPORT, , FOR CS640, CS660 ONLY, FIXED SHOE, ASN D420
7	322358	AR	WASHER, SPRING, Belleville, M8, , FIXED SHOE
8	120104	2	BOLT, Hex, M8 x 20, 8.8, , FIXED SHOE, FOR CS640, CS660 ONLY
9	89835149	1	CANVAS, , FOR CS520, CS540 ONLY, FOR CL560 ONLY
9	84026134	1	CANVAS, , FOR CS640, CS660 ONLY
10	84037243	1	PLATE, FIXING, , FOR CS520, CS540 ONLY, FOR CL560 ONLY
10	84026135	1	PLATE, RETAINING, , FOR CS640, CS660 ONLY
11	84442057	1	SHOE, SHAKER, , FOR CS520, CS540 ONLY, FOR CL560 ONLY, BSN C479
11	84462071	1	SHOE, SHAKER, , FOR CL560 ONLY, FOR CS520, CS540 ONLY, ASN D480
11	84334179	1	SHOE, SHAKER, , FOR CS640, CS660 ONLY, FIXED SHOE, BSN C479
11	84462009	1	SHOE, SHAKER, , FIXED SHOE, FOR CS640, CS660 ONLY, ASN D480
11	84071993	1	SHOE, SHAKER, , FOR CS640, CS660 ONLY, SELF LEVELING, BSN C479
11	84462070	1	SHOE, SHAKER, , SELF LEVELING, FOR CS640, CS660 ONLY, ASN D480
12	84439701	1	PLATE, , FOR CS520, CS540 ONLY, FOR CL560 ONLY
12	84439292	1	PLATE, , FOR CS640, CS660 ONLY
13	322357	AR	WASHER, SPRING, Belleville, M6,
14	86508568	AR	BOLT, Hex, M6 x 16, 8.8,
15	15896221	AR	NUT, M6, Cl 10,
16	89706690	2	NUT, M8, Cl 8, , FOR CS640, CS660 ONLY, FIXED SHOE
17	16043224	4	BOLT, Hex, M8 x 16, 8.8, Full Thd, , FIXED SHOE

15.203(01) SELF LEVELLING GRAIN PAN DIVIDERS

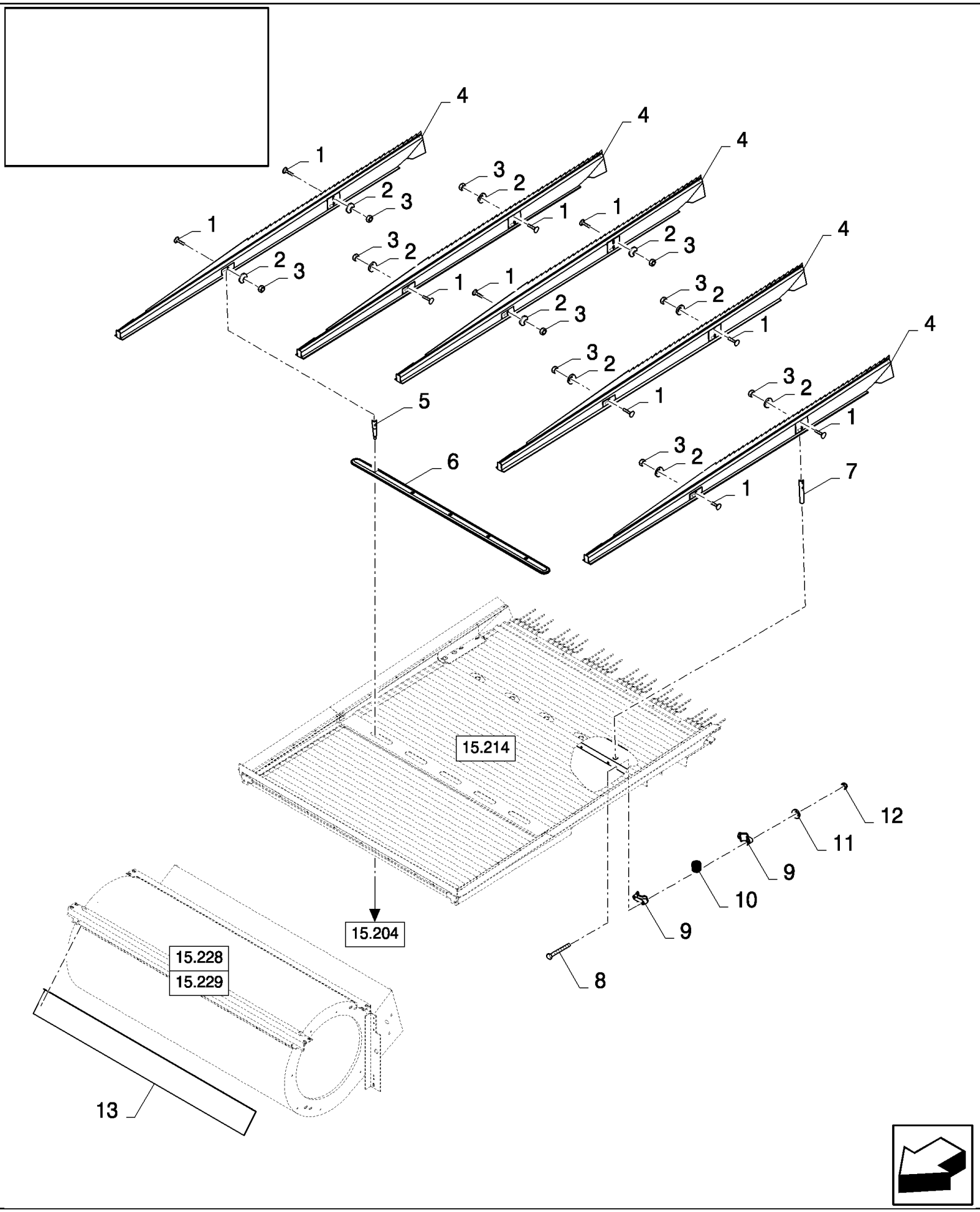

CS660 COMBINE BASE UNIT (1/03-) - Cleaning

15.203(01) SELF LEVELLING GRAIN PAN DIVIDERS

ссылка	Номер детали	Кол-во	Описание
1	86512443	AR	BOLT, CARRIAGE, Short NK, M8 x 35, Cl8.8, Full Thd, M8x35
2	412650	AR	WASHER, SPRING, Belleville, M8,
3	89706690	AR	NUT, M8, Cl 8,
4	84074207	4	CAM, , FOR CS520, CS540 ONLY
4	84074207	5	CAM, , FOR CS640, CS660 ONLY
5	80920037	4	SHAFT, , FOR CS520, CS540 ONLY
5	80920037	5	SHAFT, , FOR CS640, CS660 ONLY
6	84074623	1	PLATE, , FOR CS520, CS540 ONLY
6	84074622	1	PLATE, , FOR CS640, CS660 ONLY
7	80920109	4	SPINDLE, , FOR CS520, CS540 ONLY
7	80920109	5	SPINDLE, , FOR CS640, CS660 ONLY
8	120062	AR	BOLT, Hex, M8 x 70, 8.8,
9	320033	AR	HOUSING, {PP:80320033}
10	84000052	AR	BUSHING, RUBBER,
11	322358	AR	WASHER, SPRING, Belleville, M8,
12	86629542	AR	NUT, LOCK, M8 x 1.25, Cl 8,
13	89835560	1	PLATE, , FOR CS520, CS540 ONLY
13	84078029	1	PLATE, , FOR CS640, CS660 ONLY

15.204(01) SELF LEVELLING GRAIN PAN DIVIDERS

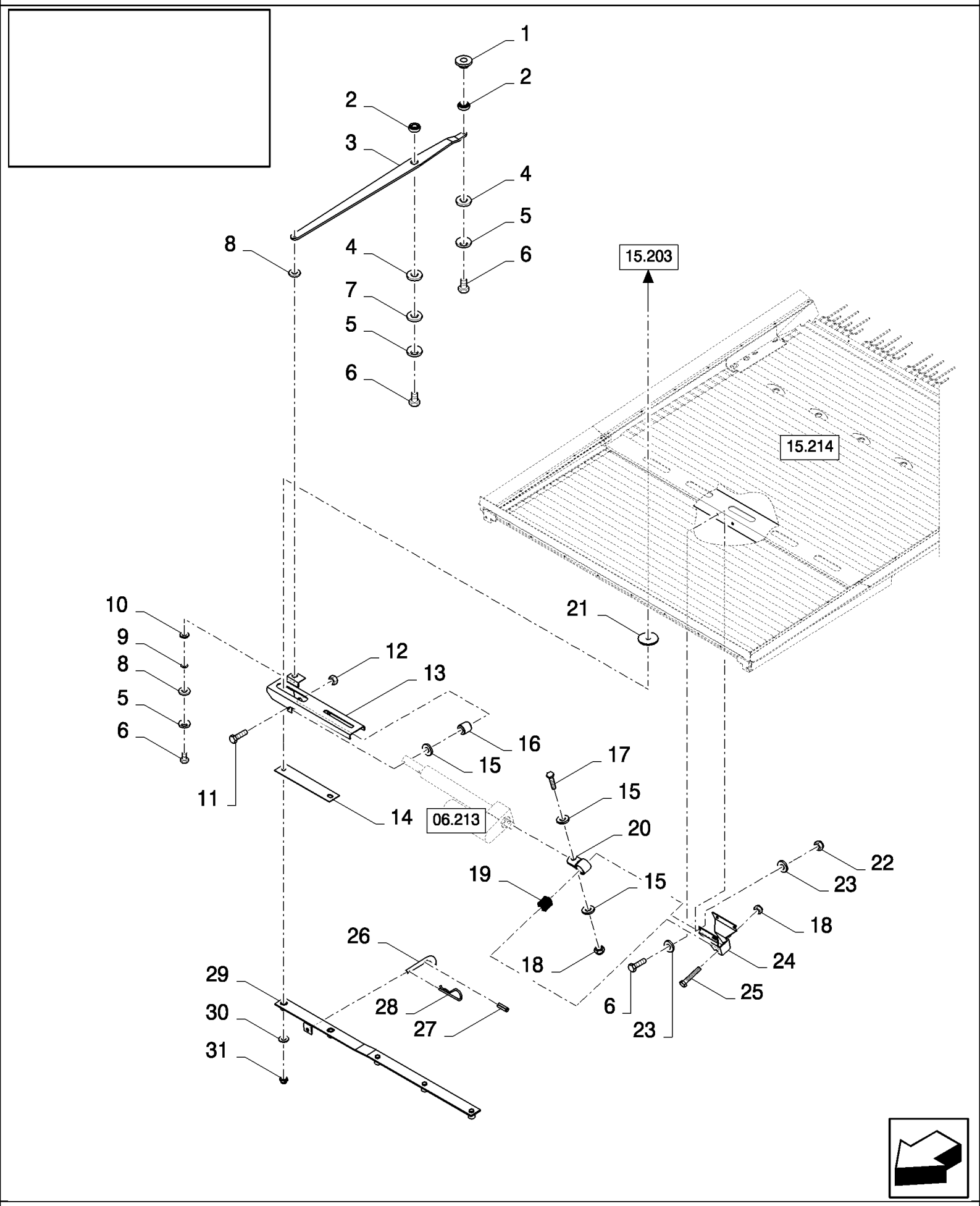

CS660 COMBINE BASE UNIT (1/03-) - Cleaning

15.204(01) SELF LEVELLING GRAIN PAN DIVIDERS

ссылка	Номер детали	Кол-во	Описание
1	446413	1	RING, {PP:80446413}
2	80412239	2	BEARING ASSY,
3	84072193	1	ARM,
4	378243	2	WASHER, M8,
5	322358	3	WASHER, SPRING, Belleville, M8,
6	120104	7	BOLT, Hex, M8 x 20, 8.8,
7	140075	1	WASHER, {PP:80140075} 8MM
8	140041	2	WASHER, M8 x 28 x 3,
9	331171	1	WASHER, {PP:80331171} 8MM
10	89833424	1	RING,
11	88043	1	BOLT, {PP:80088043} Hex, 1/2"-13 x 3 1/4", G5,
12	280431	1	NUT, {PP:80280431} 1/2"-13, G5,
13	9510785	1	TUBE, RIGID, {PP:89510785}
14	84078022	1	GUIDE,
15	378245	3	WASHER, M12,
16	322153	1	SPACER, {PP:80322153}
17	9706693	1	BOLT, Hex, M12 x 60, 8.8,
18	100038	2	NUT, LOCK, M12 x 1.75, Cl 8,
19	445913	1	BUSHING, RUBBER, {PP:80445913}
20	753565	1	CLAMP, {PP:80753565}
21	9502130	AR	FILTER, ELEMENT, {PP:89502130} 15MM
22	86629542	4	NUT, LOCK, M8 x 1.25, Cl 8,
23	140016	8	WASHER, M8 x 16 x 1.6,
24	9503023	1	RING, {PP:89503023}
25	9706717	1	BOLT, {PP:89706717} Hex, M12 x 70, 8.8, Full Thd, Hex, M12 x 70, 8.8, Full Thd
26	89503107	1	HANDLE,
27	14164370	1	PIN, LOCK, M4 x 30, Slotted,
28	370539	1	PIN, SPLIT (COTTER), {PP:80370539}
29	9503030	1	CASE, {PP:89503030} , FOR CS520, CS540 ONLY
29	84078020	1	ARM, , FOR CS640, CS660 ONLY
30	378244	AR	WASHER, M10,
31	100037	AR	NUT, M10 x 1.5, Cl 8,

15.205(01) INTERMEDIATE SHAFT

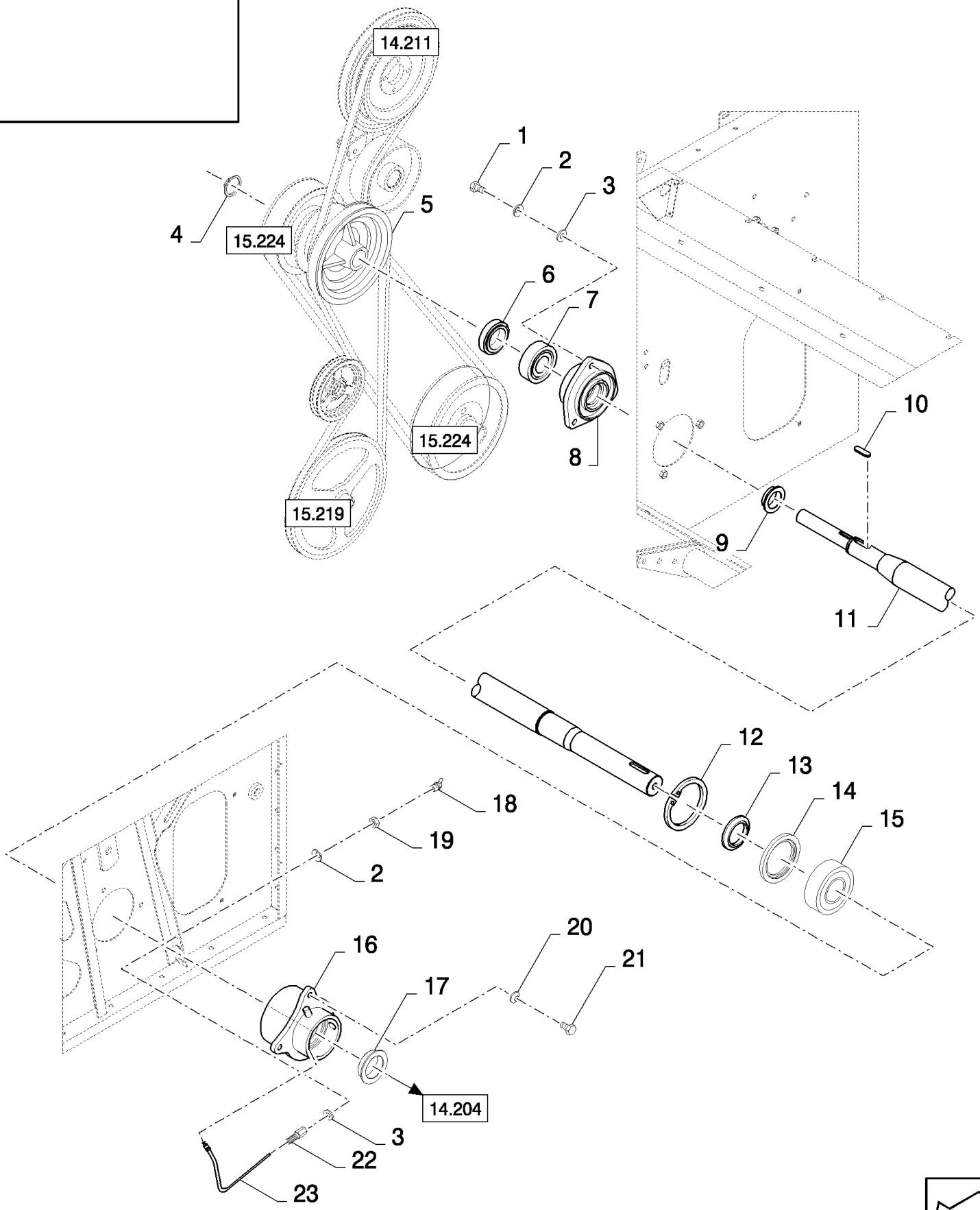

15.205(01) INTERMEDIATE SHAFT

ссылка	Номер детали	Кол-во	Описание
1	43140	3	BOLT, Hex, M10 x 30, 8.8, Full Thd,
2	140045	4	WASHER, SPRING, Belleville, M10,
3	378244	4	WASHER, M10,
4	370007	1	RING, SNAP, {PP:80370007} M45, Ext,
5	84444886	1	PULLEY,
6	84438500	1	RING, , BSN C415
6	84457165	1	RING, , ASN D416
7	210086	1	BEARING ASSY, {PP:80210086} , BSN C415
7	388069	1	BEARING ASSY, {PP:80388069} , ASN D416
8	433908	1	HOUSING, BEARING, {PP:80433908} , BSN C415
8	439605	1	HOUSING, BEARING, {PP:80439605} , ASN D416
9	80426516	1	RING, , BSN C415
9	388669	1	RING, {PP:80388669} , ASN D416
10	170066	1	KEY, {PP:80170066}
11	84447796	1	SHAFT, , FOR CS520, CS540 ONLY, BSN C415
11	84457743	1	SHAFT, PROPELLOR, , FOR CS520, CS540 ONLY, FOR CL560 ONLY, ASN D416
11	84447720	1	SHAFT, , FOR CS640, CS660 ONLY, BSN C415
11	84455783	1	SHAFT, PROPELLOR, , FOR CS640, CS660 ONLY, ASN D416
12	370014	1	RING, SNAP, {PP:80370014} M130, Int,
13	84447437	1	RING, , BSN C415
13	84447659	1	RING, , ASN D416
14	84072255	1	RING, , BSN C482
14	87335332	1	RING, , ASN D483
15	84434950	1	BEARING ASSY,
16	84334340	1	HOUSING, BEARING,
17	84072254	1	RING,
18	84814929	1	NIPPLE, LUBE,
19	100016	1	NUT, M10, Cl 8,
20	140046	3	WASHER, SPRING, Belleville, M12,
21	9706687	3	BOLT, Hex, M12 x 30, 8.8,
22	84817004	1	CONNECTOR, HYD.,
23	84077866	1	TUBE,

15.206(01) AUGER HOUSING

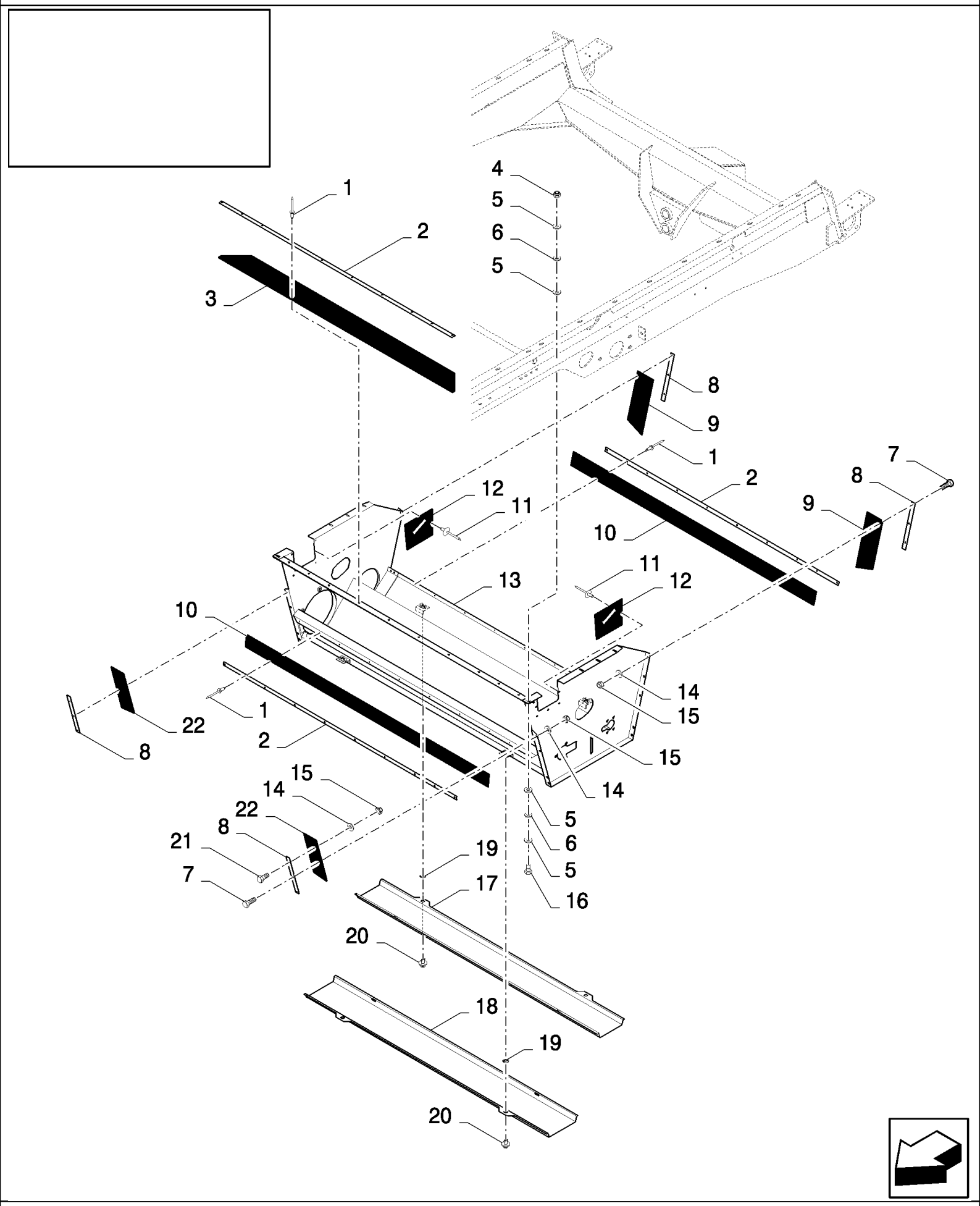

CS660 COMBINE BASE UNIT (1/03-) - Cleaning

15.206(01) AUGER HOUSING

ссылка	Номер детали	Кол-во	Описание
1	NSS	AR	NOT SERVICED SEPARATELY, Rivet
2	9815946	3	PLATE, FIXING, {PP:89815946} , FOR CS520, CS540 ONLY, FOR CL560 ONLY
2	84989728	3	PLATE, FIXING, , FOR CS640, CS660 ONLY
3	84989811	1	CANVAS, , FOR CS520, CS540 ONLY, FOR CL560 ONLY
3	84023434	1	CANVAS, , FOR CS640, CS660 ONLY
4	86629542	8	NUT, LOCK, M8 x 1.25, Cl 8,
5	140041	32	WASHER, M8 x 28 x 3,
6	190132	16	WASHER, {PP:80190132} 9MM
7	120100	10	BOLT, Hex, M6 x 20, 8.8,
8	89811571	4	PLATE,
9	89505249	2	CANVAS,
10	918145	2	CANVAS, {PP:80918145} , FOR CS520, CS540 ONLY, FOR CL560 ONLY
10	84989681	2	CANVAS, , FOR CS640, CS660 ONLY
11	NSS	14	NOT SERVICED SEPARATELY, Rivet
12	89509843	2	CANVAS,
13	84989636	1	HOUSING, , FOR CS520, CS540 ONLY, FOR CL560 ONLY
13	84989577	1	HOUSING, , FOR CS640, CS660 ONLY
14	9824259	12	WASHER, M6 x 12 x 1.6,
15	353308	12	NUT, LOCK, M6 x 1, Cl 8,
16	43129	8	BOLT, Hex, M8 x 40, 8.8,
17	84989674	1	COVER, , FOR CS520, CS540 ONLY, FOR CL560 ONLY
17	84989666	1	COVER, , FOR CS640, CS660 ONLY
17	84982652	1	GUARD, , FOR CS520, CS540 ONLY, FOR CL560 ONLY, PERFORATED (LONG HOLES)
17	84982659	1	GUARD, , PERFORATED (LONG HOLES), FOR CS640, CS660 ONLY
18	84989677	1	COVER, , FOR CS520, CS540 ONLY, FOR CL560 ONLY
18	84989667	1	COVER, , FOR CS640, CS660 ONLY
18	84982654	1	GUARD, , FOR CS520, CS540 ONLY, FOR CL560 ONLY, PERFORATED (LONG HOLES)
18	84982657	1	GUARD, , PERFORATED (LONG HOLES), FOR CS640, CS660 ONLY
19	9514605	4	RING, LOCKING, {PP:89514605}
20	89514603	4	LOCK,
21	86508568	2	BOLT, Hex, M6 x 16, 8.8,
22	80388331	2	GASKET,

15.207(01) STRAW WALKER SHAFTS BEARING

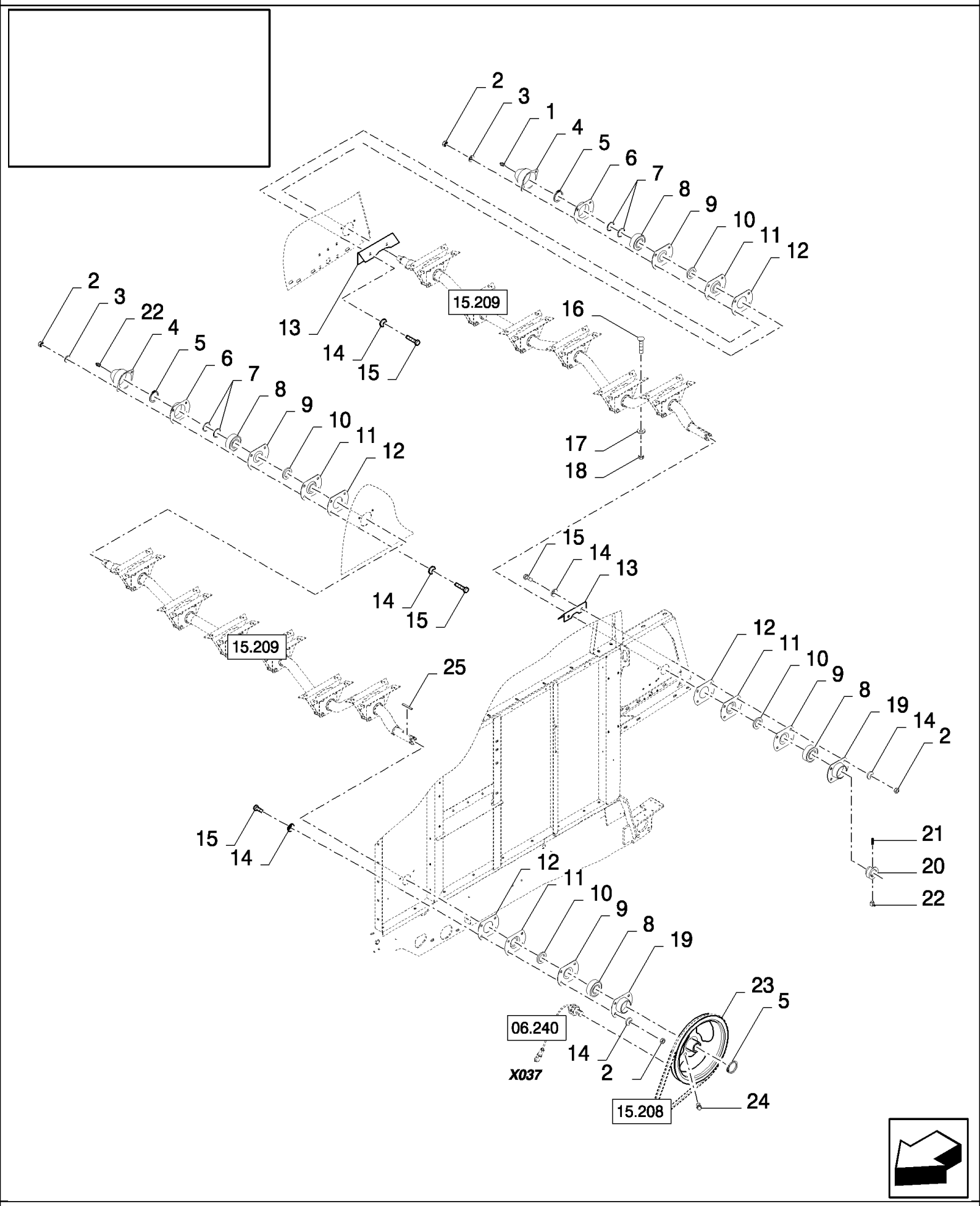

CS660 COMBINE BASE UNIT (1/03-) - Cleaning

15.207(01) STRAW WALKER SHAFTS BEARING

ссылка	Номер детали	Кол-во	Описание
1	332038	1	NIPPLE, LUBE, {PP:80332038}
2	89706690	16	NUT, M8, Cl 8,
3	140160	8	WASHER, LOCK, {PP:80140160} Int T, M8
4	310067	2	COVER, {PP:80310067}
5	370003	3	RING, SNAP, {PP:80370003} M30, Ext,
6	9511041	2	FLANGE, {PP:89511041} , FOR CS520, CS540 ONLY, FOR CL560 ONLY
6	84435386	2	HOUSING, BEARING, , FOR CS640, CS660 ONLY
7	140108	AR	WASHER, {PP:80140108} 31MM
8	210033	4	BEARING, BALL, {PP:80210033} , FOR CS520, CS540 ONLY, FOR CL560 ONLY
8	84071761	4	BEARING ASSY, , FOR CS640, CS660 ONLY
9	84814927	4	COVER,
10	220061	4	SEAL, FELT, {PP:80220061}
11	84814926	4	COVER,
12	310085	4	FLANGE, {PP:80310085} , FOR CS520, CS540 ONLY, FOR CL560 ONLY
13	84041119	2	PLATE, COVER,
14	322358	24	WASHER, SPRING, Belleville, M8,
15	43127	16	BOLT, Hex, M8 x 25, 8.8,
16	338949	AR	BOLT, CARRIAGE, Short NK, M10 x 25, Cl8.8, Full Thd,
17	394629	AR	WASHER, LOCK, {PP:80394629} 10.5MM
18	100037	AR	NUT, M10 x 1.5, Cl 8,
19	310049	2	HOUSING, BEARING, {PP:80310049} , FOR CL560 ONLY, FOR CS520, CS540 ONLY
19	84435387	2	HOUSING, BEARING, , FOR CS640, CS660 ONLY
20	300014	1	COLLAR, {PP:80300014}
21	300480	1	SET SCREW, {PP:80300480} Hex Soc, M10 x 12, Cup Pt, M10x12
22	332040	2	NIPPLE, LUBE, {PP:80332040} 90є, 1/8" NPT x .84" lg,
23	84334185	1	PULLEY,
24	321204	1	NIPPLE, LUBE, {PP:80321204} M6 x 1, 16mm lg,
25	170010	1	KEY, {PP:80170010}

15.208(01) STRAW WALKER DRIVE

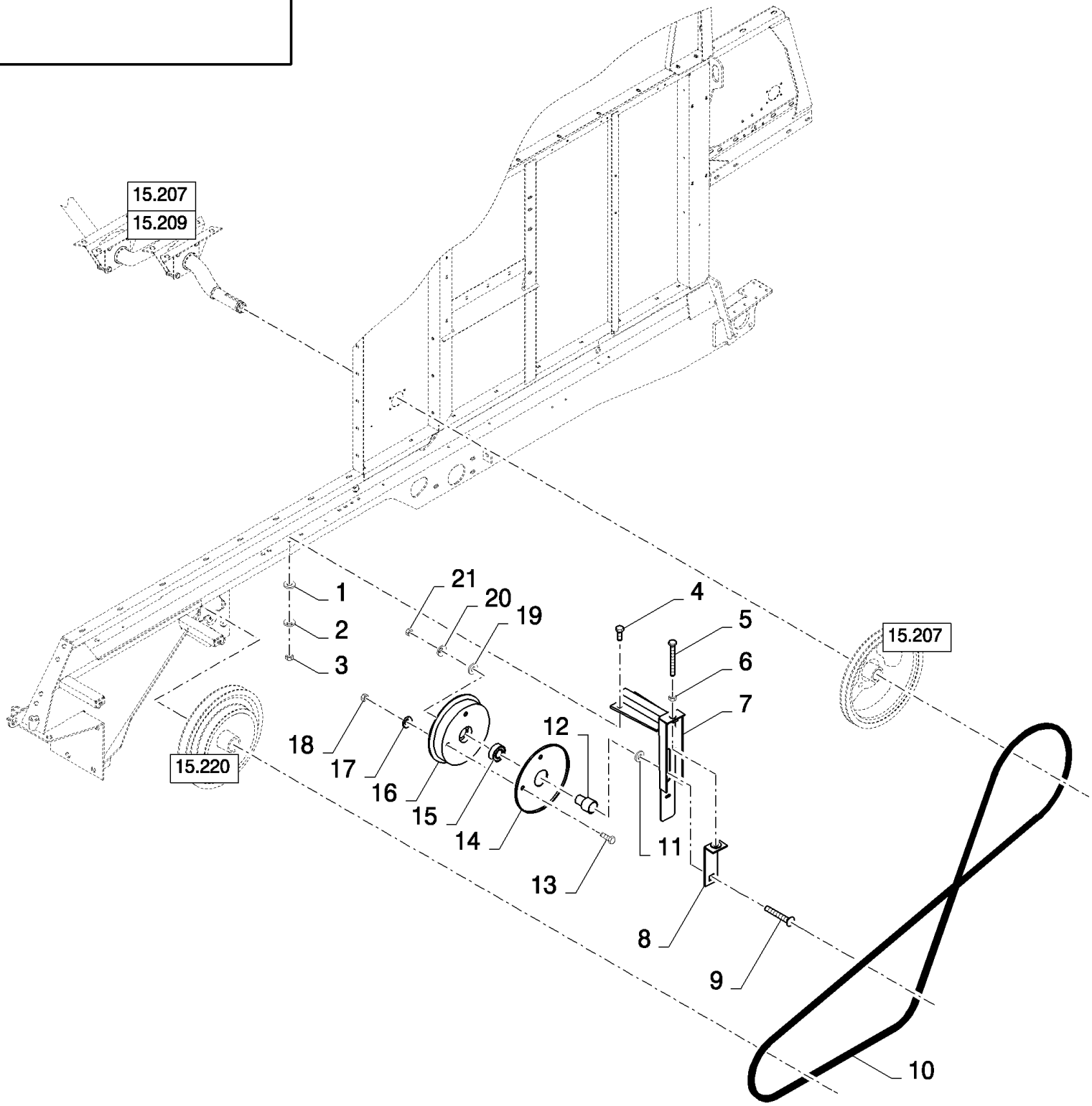

CS660 COMBINE BASE UNIT (1/03-) - Cleaning

15.208(01) STRAW WALKER DRIVE

ссылка	Номер детали	Кол-во	Описание
1	378244	2	WASHER, M10,
2	140045	2	WASHER, SPRING, Belleville, M10,
3	100016	2	NUT, M10, Cl 8,
4	43140	2	BOLT, Hex, M10 x 30, 8.8, Full Thd,
5	321802	1	SCREW, {PP:80321802} M12x120, BSN C407
5	9837937	1	BOLT, {PP:89837937} Hex, M10 x 100, 8.8, Full Thd, M12x100, ASN D408
6	9706685	1	NUT, M12, Cl 8,
7	84073294	1	SUPPORT,
8	84989830	1	BRACKET,
9	120047	1	BOLT, CARRIAGE, Short NK, M16 x 70, Cl8.8, , BSN C407
9	120048	1	BOLT, CARRIAGE, Short NK, M16 x 80, Cl8.8, , ASN D408
10	84073276	1	BELT, TRANSMISSION,
11	378246	1	WASHER, {PP:80378246} 16MM
12	9515145	1	BUSHING, {PP:89515145} , BSN C407
12	200072	1	BUSHING, {PP:80200072} , ASN D408
13	86508568	3	BOLT, Hex, M6 x 16, 8.8,
14	290119	1	HALF-PULLEY, {PP:80290119}
15	443898	1	BEARING, BALL, {PP:80443898}
16	290122	1	HALF-PULLEY, {PP:80290122}
17	322357	3	WASHER, SPRING, Belleville, M6,
18	15896221	3	NUT, M6, Cl 10,
19	140020	1	WASHER, M16 x 30 x 3,
20	86729275	1	WASHER, LOCK, 5/8",
21	100020	1	NUT, M16, Cl 8,

15.209(01) STRAW WALKER SHAFTS

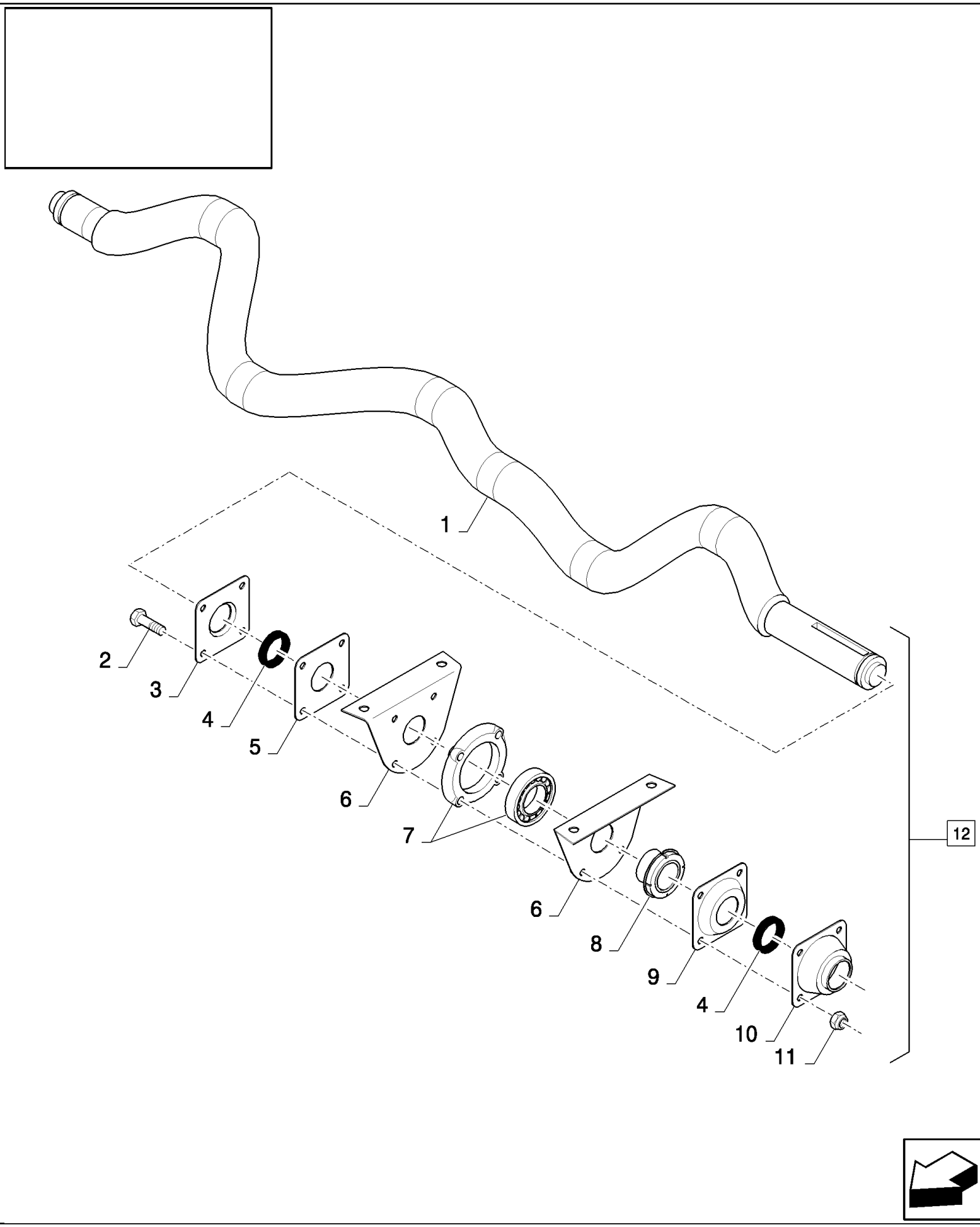

15.209(01) STRAW WALKER SHAFTS

ссылка	Номер детали	Кол-во	Описание
1	84435950	1	SHAFT, , FOR CS520, CS540 ONLY, FOR CL560 ONLY, BSN C429
1	84454612	1	SHAFT, , FOR CL560 ONLY, FOR CS520, CS540 ONLY, ASN D430
1	84057292	1	SHAFT, , FOR CS640, CS660 ONLY
2	43129	AR	BOLT, Hex, M8 x 40, 8.8,
3	9850682	5	FLANGE, , FOR CS520, CS540 ONLY, FOR CL560 ONLY
3	84072502	6	FLANGE, , FOR CS640, CS660 ONLY
4	9850108	10	RING, , FOR CS520, CS540 ONLY, FOR CL560 ONLY
4	84057533	12	RING, , FOR CS640, CS660 ONLY
5	9850679	5	FLANGE, , FOR CS520, CS540 ONLY, FOR CL560 ONLY
5	84072504	6	FLANGE, , FOR CS640, CS660 ONLY
6	421876	10	PLATE, , FOR CS520, CS540 ONLY, FOR CL560 ONLY
6	421876	12	PLATE, , FOR CS640, CS660 ONLY
7	396079	5	BEARING ASSY, , FOR CS520, CS540 ONLY, BSN C407
7	84434854	5	BEARING ASSY, , FOR CS520, CS540 ONLY, FOR CL560 ONLY, ASN D408
7	396079	6	BEARING ASSY, , FOR CS640, CS660 ONLY, BSN C407
7	84434854	6	BEARING ASSY, , FOR CS640, CS660 ONLY, ASN D408
8	306740	5	SLEEVE, , FOR CS520, CS540 ONLY, FOR CL560 ONLY
8	84057563	6	SLEEVE, , FOR CS640, CS660 ONLY
9	9850681	5	COVER, , FOR CS520, CS540 ONLY, FOR CL560 ONLY
9	84072507	6	FLANGE, , FOR CS640, CS660 ONLY
10	9850680	5	FLANGE, , FOR CS520, CS540 ONLY, FOR CL560 ONLY
10	84072506	6	FLANGE, , FOR CS640, CS660 ONLY
11	86629542	20	NUT, LOCK, M8 x 1.25, Cl 8, , FOR CS520, CS540 ONLY, FOR CL560 ONLY
11	86629542	24	NUT, LOCK, M8 x 1.25, Cl 8, , FOR CS640, CS660 ONLY
12	84437155	2	SHAFT, (1 to 11), FOR CS520, CS540 ONLY, FOR CL560 ONLY, BSN C429
12	84454903	2	SHAFT, (1 to 11), FOR CL560 ONLY, FOR CS520, CS540 ONLY, ASN D430
12	84072405	2	SHAFT, (1 to 11), FOR CS640, CS660 ONLY

15.210(01) CLEANING SHOE FAN GUARD

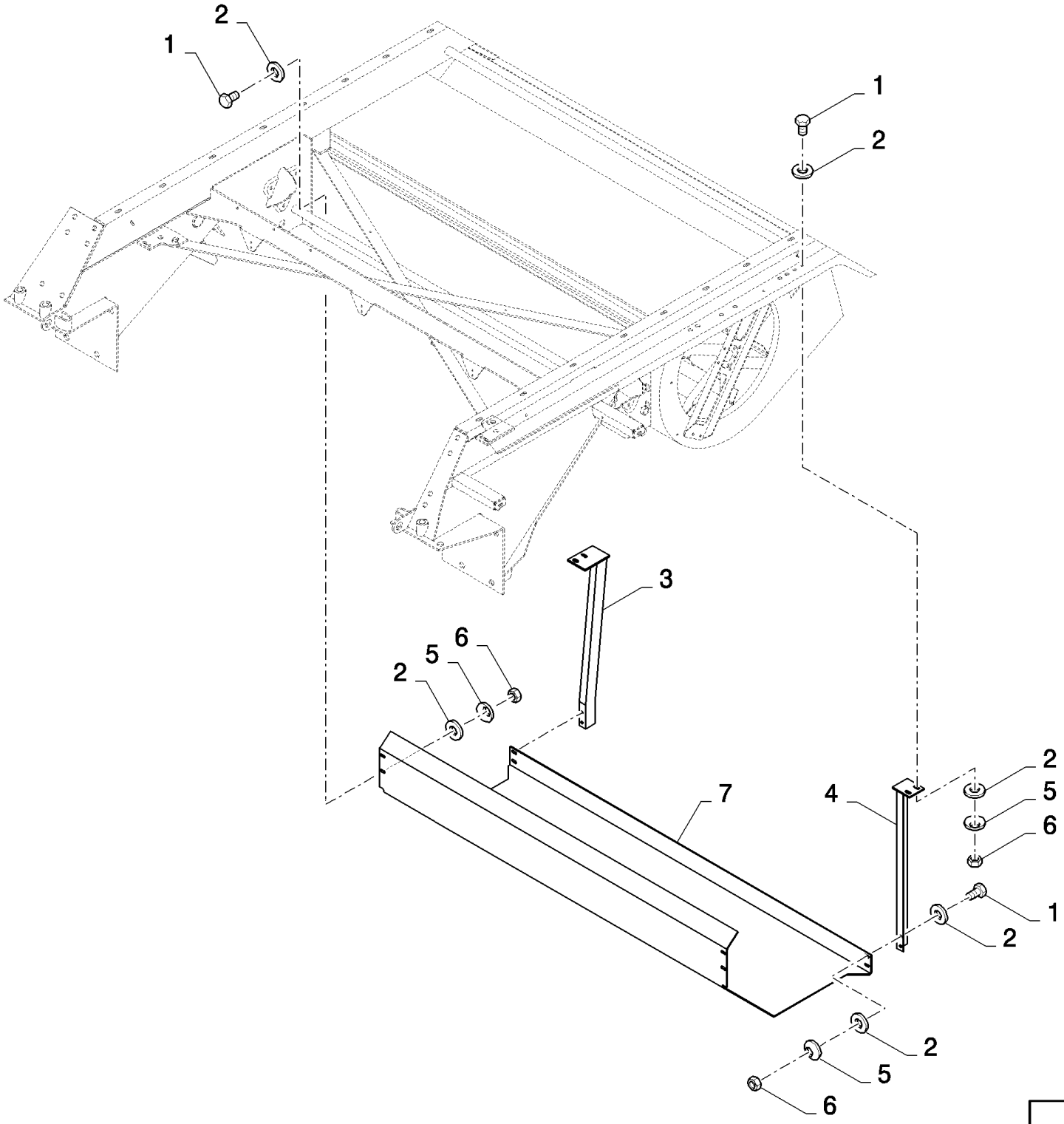

15.210(01) CLEANING SHOE FAN GUARD

ссылка	Номер детали	Кол-во	Описание
1	43127	12	BOLT, Hex, M8 x 25, 8.8,
2	378243	24	WASHER, M8,
3	80424732	1	SUPPORT,
4	80424728	1	SUPPORT,
5	322358	12	WASHER, SPRING, Belleville, M8,
6	89706690	12	NUT, M8, Cl 8,
7	84432608	1	PLATE, , FOR CS520, CS540 ONLY, FOR CL560 ONLY
7	84432609	1	PLATE, , FOR CS640, CS660 ONLY

15.212(01) TAILINGS ELEVATORS, BOTTOM AUGER

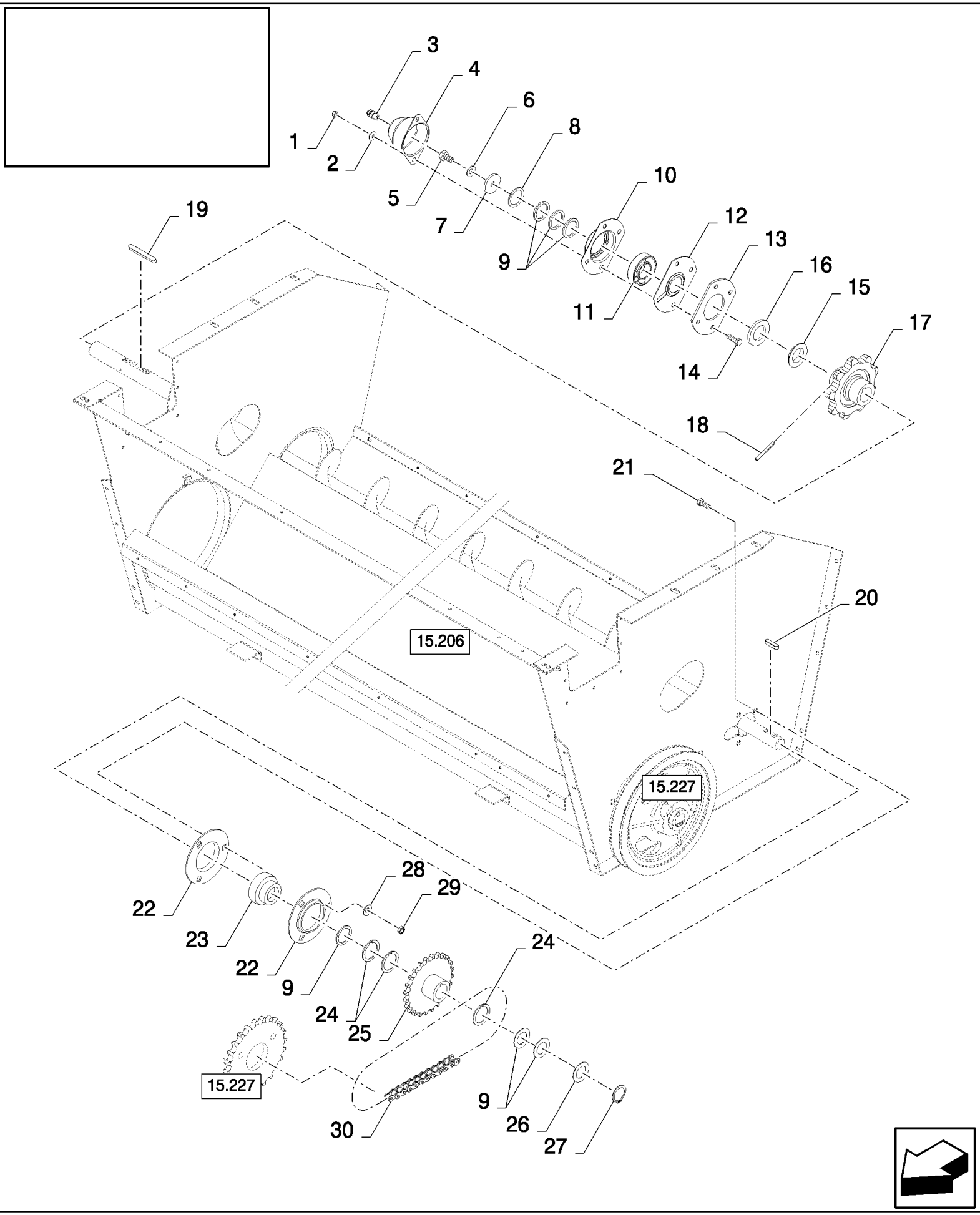

15.212(01) TAILINGS ELEVATORS, BOTTOM AUGER

ссылка	Номер детали	Кол-во	Описание
1	89706690	4	NUT, M8, Cl 8,
2	322358	4	WASHER, SPRING, Belleville, M8,
3	332038	1	NIPPLE, LUBE, {PP:80332038}
4	310067	1	COVER, {PP:80310067}
5	43138	1	BOLT, Hex, M10 x 20, 8.8, Full Thd,
6	140045	1	WASHER, SPRING, Belleville, M10,
7	140219	1	WASHER, {PP:80140219} 11MM
8	140109	1	WASHER, {PP:80140109} 31MM
9	140110	AR	WASHER, {PP:80140110} 31MM
10	9511041	1	FLANGE, {PP:89511041}
11	210064	1	BEARING ASSY, {PP:80210064}
12	84814927	1	COVER,
13	84981540	1	FLANGE,
14	43127	4	BOLT, Hex, M8 x 25, 8.8,
15	310072	1	RING, {PP:80310072}
16	220062	1	ELEMENT, SEALING, {PP:80220062}
17	84981028	1	SPROCKET, DRIVEN,
18	333960	1	PIN, LOCK, {PP:80333960} M6 x 50, Slotted,
19	354775	1	KEY, {PP:80354775}
20	170008	1	KEY, {PP:80170008}
21	86633356	3	BOLT, CARRIAGE, Short NK, M10 x 25, Cl8.8, Full Thd,
22	40697	2	FLANGE, {PP:80040697}
23	325106	1	BEARING ASSY, {PP:80325106}
24	444974	AR	WASHER, {PP:80444974}
25	84981224	1	SPROCKET, DRIVEN,
26	140108	1	WASHER, {PP:80140108} 31MM
27	370003	1	RING, SNAP, {PP:80370003} M30, Ext,
28	412655	3	WASHER, SPRING, Belleville, M10,
29	100016	3	NUT, M10, Cl 8,
30	216820	1	CHAIN, {PP:80216820}

15.213(01) INTERCHANGEABLE LOWER SIEVE, FRAME, BLANK-D=16MM,D=18MM

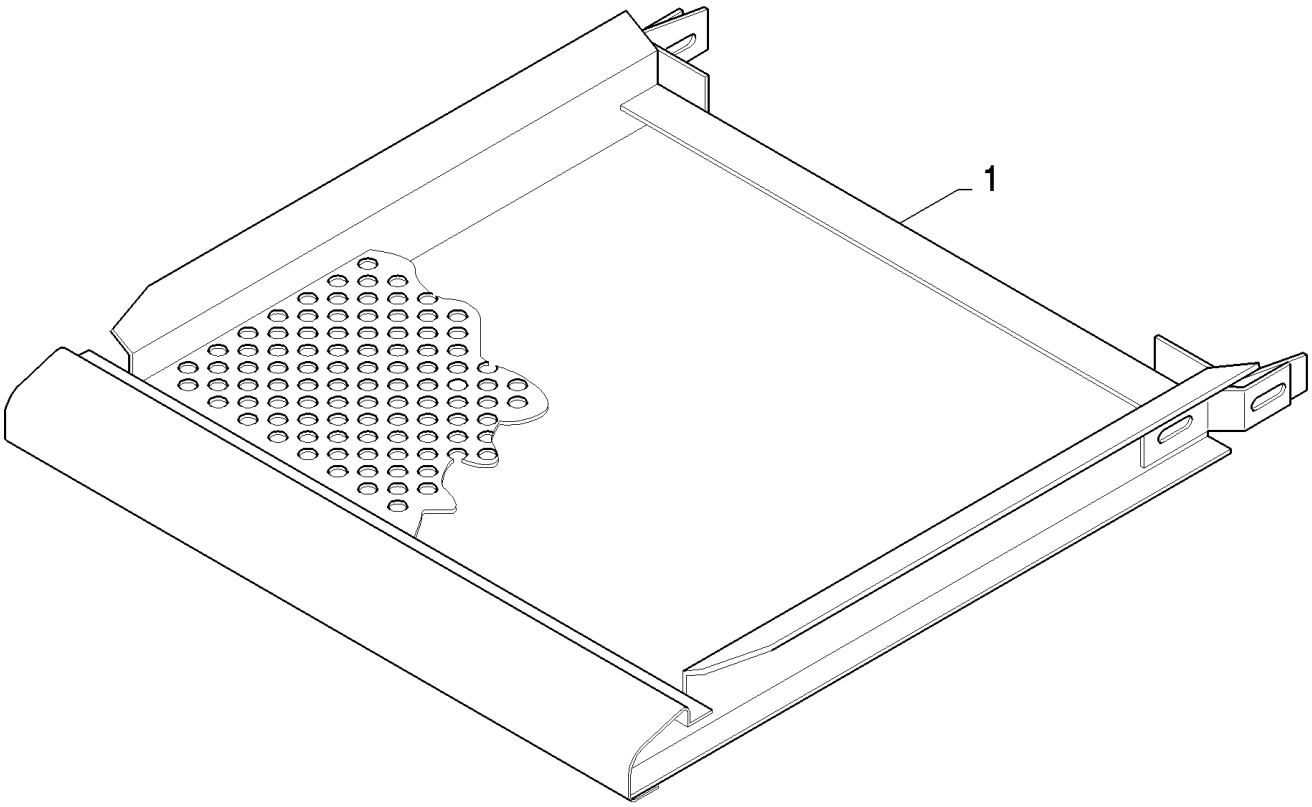

15.213(01) INTERCHANGEABLE LOWER SIEVE, FRAME, BLANK-D=16MM,D=18MM

ссылка	Номер детали	Кол-во	Описание
1	80395158	1	SIEVE, D=16MM, FOR CL560 ONLY, FOR CS520, CS540 ONLY
1	395160	1	COUPLING, {PP:80395160} D=18MM, FOR CS520, CS540 ONLY, FOR CL560 ONLY
1	390370	1	D=16MM, FOR CS640, CS660 ONLY
1	390371	1	D=18MM, FOR CS640, CS660 ONLY

15.214(01) GRAIN PAN, REMOVABLE

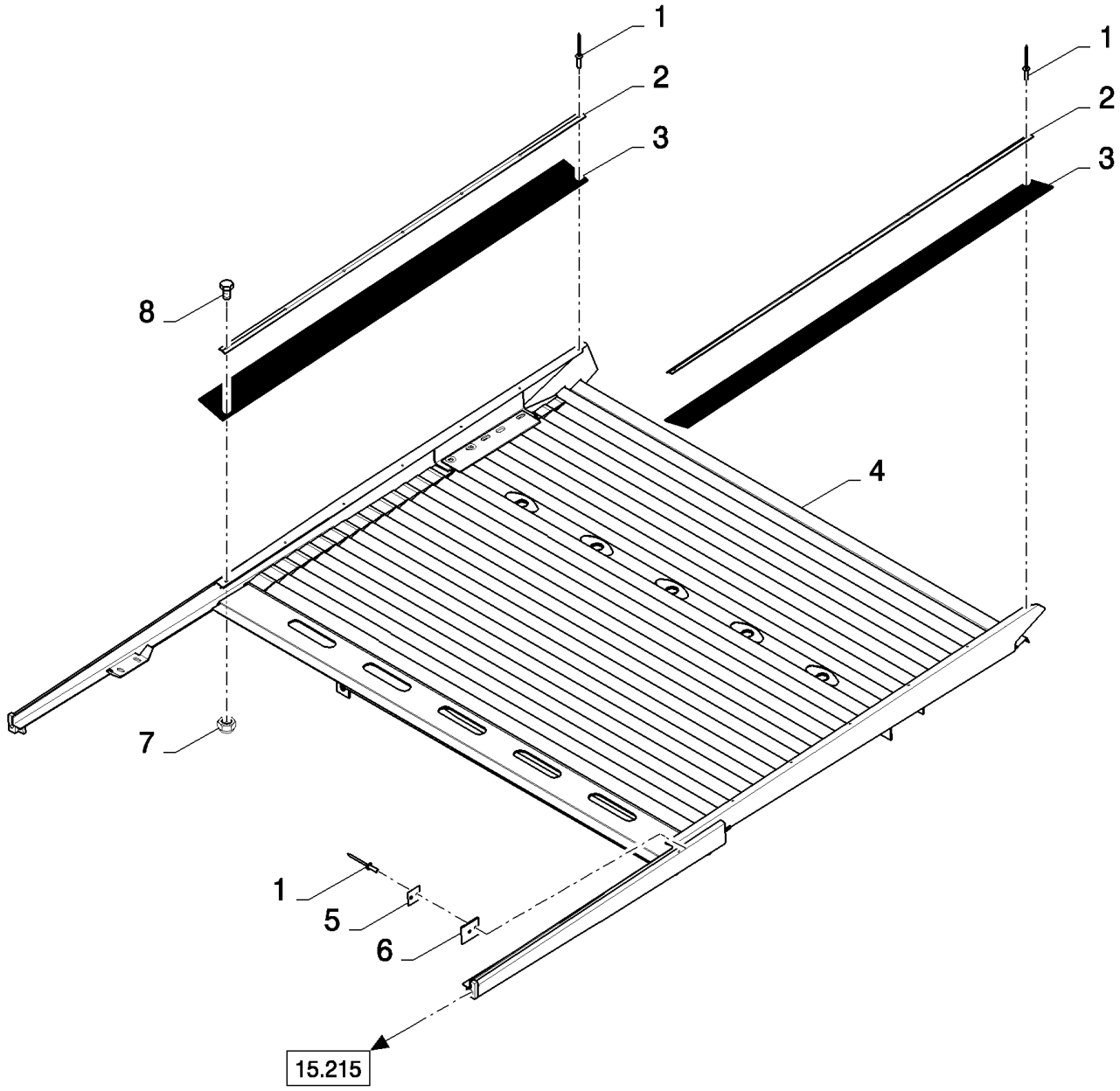

15.214(01) GRAIN PAN, REMOVABLE

ссылка	Номер детали	Кол-во	Описание
1	NS	AR	NOT SERVICED, Rivet
2	84072565	2	PLATE, FIXING,
3	84072563	2	CANVAS,
4	84989783	1	GRAIN PAN, , FOR CS520, CS540 ONLY, FOR CL560 ONLY, FIXED SHOE
4	84431016	1	GRAIN PAN, , FOR CS520, CS540 ONLY, SELF LEVELING
4	84989727	1	GRAIN PAN, , FOR CS640, CS660 ONLY, FIXED SHOE
4	84071491	1	GRAIN PAN, , FOR CS640, CS660 ONLY, SELF LEVELING
5	84073793	2	PLATE, FIXING,
6	84073720	2	CANVAS,
7	353308	2	NUT, LOCK, M6 x 1, Cl 8,
8	120100	2	BOLT, Hex, M6 x 20, 8.8,

15.215(01) GRAIN PAN, REMOVABLE

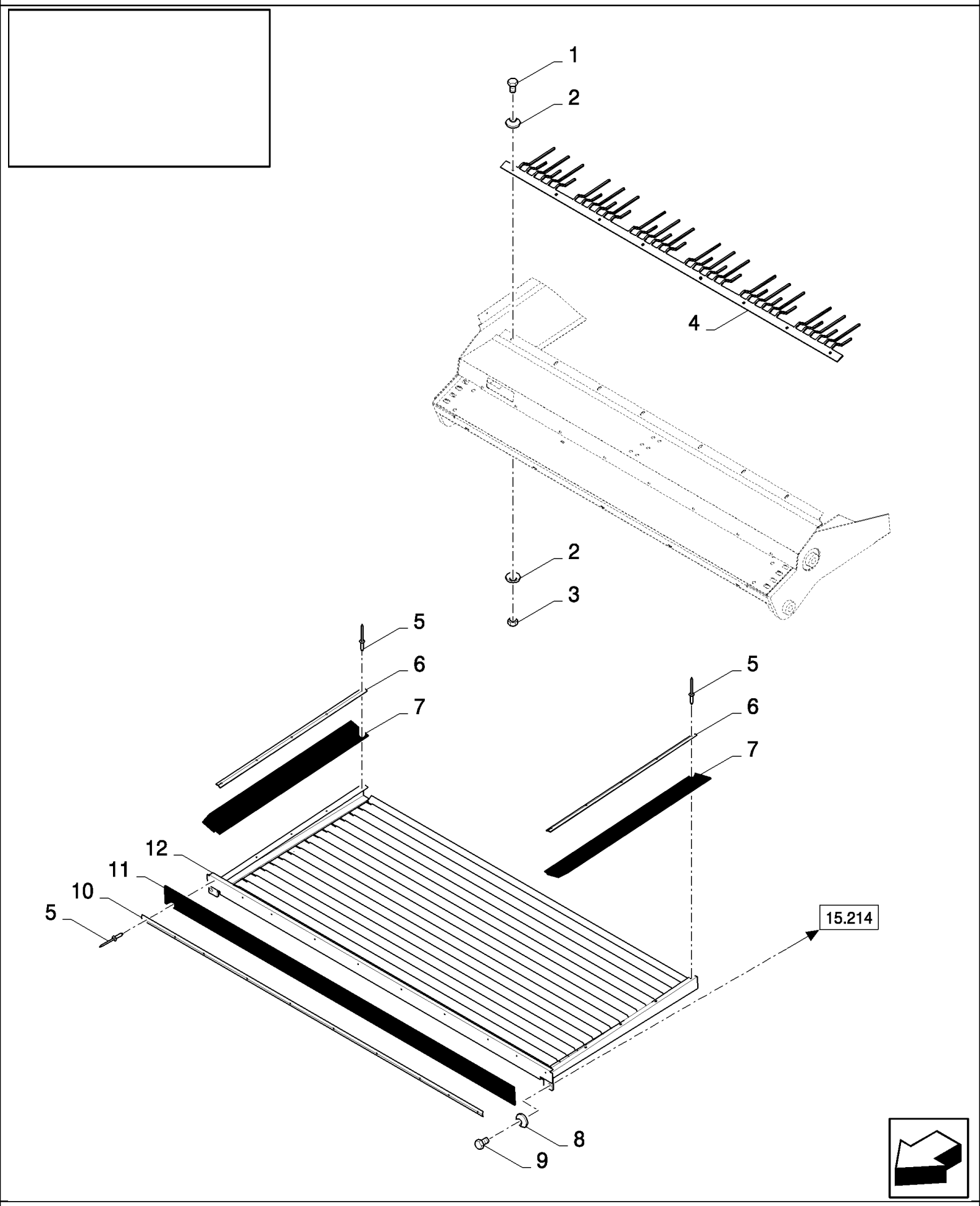

15.215(01) GRAIN PAN, REMOVABLE

ссылка	Номер детали	Кол-во	Описание
1	86508568	AR	BOLT, Hex, M6 x 16, 8.8,
2	322357	AR	WASHER, SPRING, Belleville, M6,
3	15896221	AR	NUT, M6, Cl 10,
4	84334537	1	RAKE, , FOR CS520, CS540 ONLY, FIXED SHOE, BSN C383
4	84452950	1	RAKE, , FIXED SHOE, FOR CL560 ONLY, FOR CS520, CS540 ONLY, ASN D384
4	84334538	1	RACK, , FOR CS520, CS540 ONLY, SELF LEVELING
4	84334477	1	RAKE, , FOR CS640, CS660 ONLY, FIXED SHOE, BSN C383
4	84446434	1	RAKE, , FIXED SHOE, FOR CS640, CS660 ONLY, ASN D384
4	84072667	1	RACK, , FOR CS640, CS660 ONLY, SELF LEVELING
5	NS	AR	NOT SERVICED, Rivet
6	84072726	2	PLATE, FIXING,
7	84072358	2	CANVAS,
8	140045	2	WASHER, SPRING, Belleville, M10,
9	43140	2	BOLT, Hex, M10 x 30, 8.8, Full Thd,
10	84431049	1	PLATE, FIXING, , FOR CS520, CS540 ONLY, FOR CL560 ONLY
10	84072727	1	PLATE, FIXING, , FOR CS640, CS660 ONLY
11	84431030	1	CANVAS, , FOR CS520, CS540 ONLY, FOR CL560 ONLY
11	84072359	1	CANVAS, , FOR CS640, CS660 ONLY
12	84431181	1	GRAIN PAN, , FOR CS520, CS540 ONLY, FOR CL560 ONLY, FIXED SHOE
12	84334430	1	GRAIN PAN, , FOR CS520, CS540 ONLY, SELF LEVELING
12	84431299	1	GRAIN PAN, , FOR CS640, CS660 ONLY, FIXED SHOE
12	84071651	1	GRAIN PAN, , FOR CS640, CS660 ONLY, SELF LEVELING

15.216(01) SHAKER SHOE

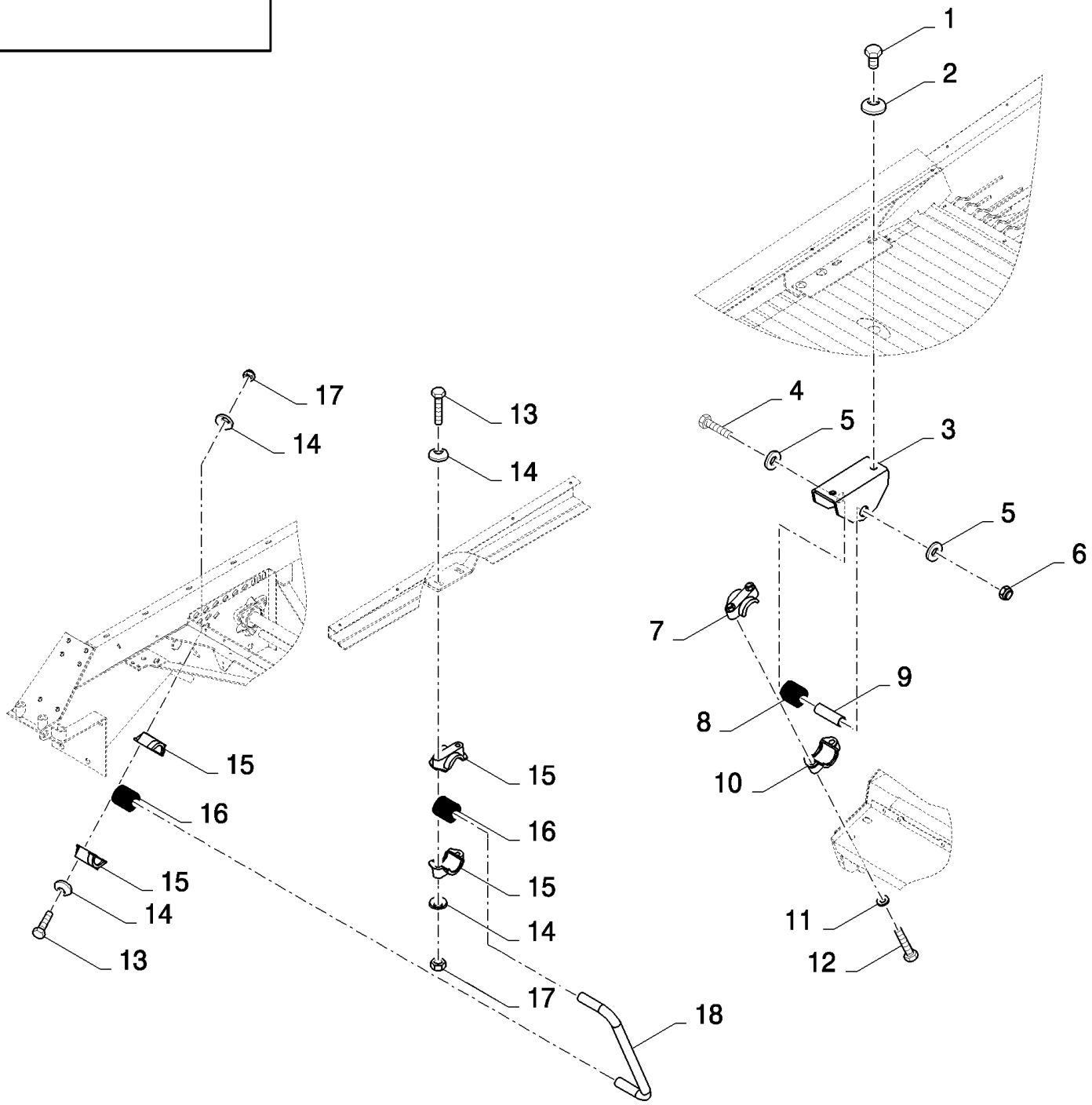

CS660 COMBINE BASE UNIT (1/03-) - Cleaning

15.216(01) SHAKER SHOE

ссылка	Номер детали	Кол-во	Описание
1	43140	4	BOLT, Hex, M10 x 30, 8.8, Full Thd,
2	140045	4	WASHER, SPRING, Belleville, M10,
3	89512004	2	SUPPORT,
4	120248	2	BOLT, Hex, M16 x 100, 8.8, Full Thd,
5	86592702	4	WASHER, M16 x 45 x 6, HT, 16MM
6	86000441	2	NUT, LOCK, M16 x 2, Cl 8,
7	9510495	2	HOUSING, {PP:89510495}
8	338222	2	BUSHING, RUBBER, {PP:80338222}
9	9511999	2	GUARD, {PP:89511999}
10	387449	2	HALF-FLANGE, {PP:80387449}
11	394629	4	WASHER, LOCK, {PP:80394629} 10MM
12	355788	4	BOLT, {PP:80355788} Hex, M10 x 70, 10.9, M10x70
13	120062	8	BOLT, Hex, M8 x 70, 8.8,
14	322358	16	WASHER, SPRING, Belleville, M8,
15	320033	8	HOUSING, {PP:80320033}
16	84000052	4	BUSHING, RUBBER,
17	86629542	8	NUT, LOCK, M8 x 1.25, Cl 8,
18	9504173	2	SCREW, {PP:89504173}

15.217(01) SHAKER SHOE

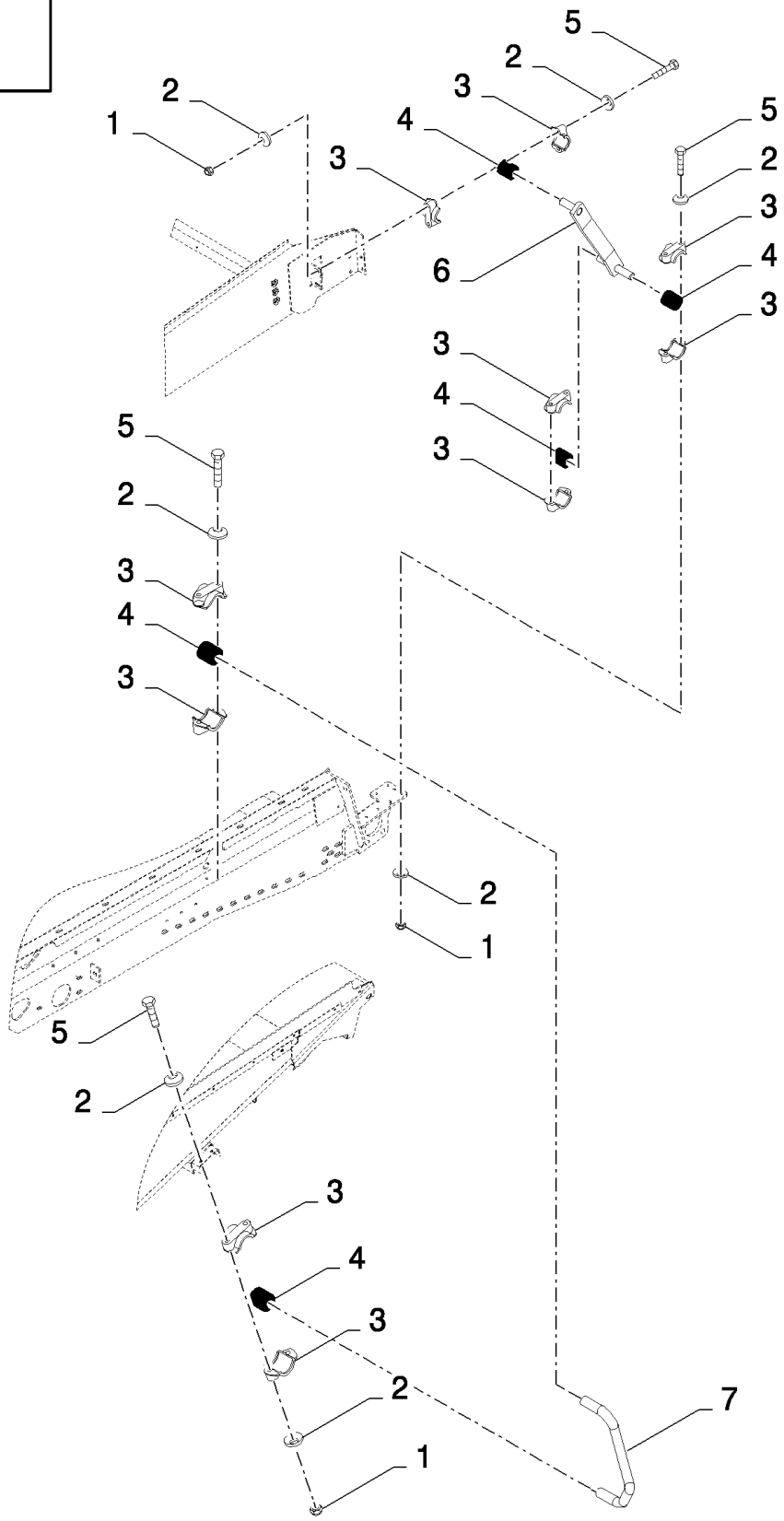

CS660 COMBINE BASE UNIT (1/03-) - Cleaning

15.217(01) SHAKER SHOE

ссылка	Номер детали	Кол-во	Описание
1	86629542	16	NUT, LOCK, M8 x 1.25, Cl 8,
2	322358	36	WASHER, SPRING, Belleville, M8,
3	320033	20	HOUSING, {PP:80320033}
4	84000052	10	BUSHING, RUBBER,
5	120062	20	BOLT, Hex, M8 x 70, 8.8,
6	84334808	2	ARM,
7	84434759	2	SUPPORT,

15.218(01) SHAKER SHOE

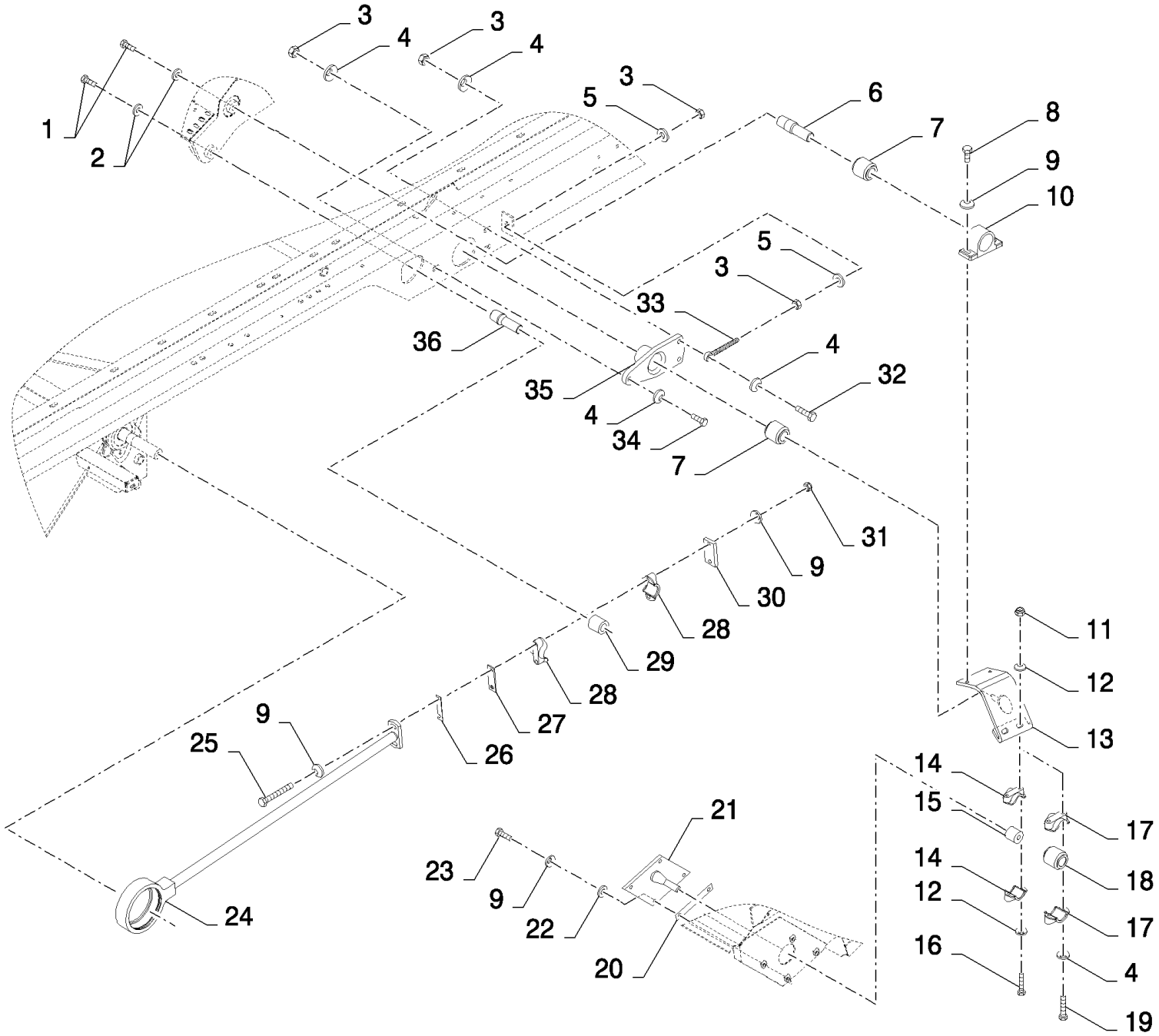

CS660 COMBINE BASE UNIT (1/03-) - Cleaning

15.218(01) SHAKER SHOE

ссылка	Номер детали	Кол-во	Описание
1	120091	4	BOLT, Hex, M16 x 60, 8.8,
2	86592702	4	WASHER, M16 x 45 x 6, HT, 16MM
3	9706685	8	NUT, M12, Cl 8,
4	140046	AR	WASHER, SPRING, Belleville, M12,
5	86511324	2	WASHER, M12 x 24 x 2.5,
6	89813486	2	SHAFT,
7	80442446	AR	BUSHING, RUBBER, , BSN C511
7	84459072	AR	BUSHING, RUBBER, , ASN D512
8	43139	4	SCREW, M10x25
9	140045	20	WASHER, SPRING, Belleville, M10,
10	89813482	2	HUB,
11	86629542	4	NUT, LOCK, M8 x 1.25, Cl 8, , FOR CS520, CS540 ONLY, FOR CL560 ONLY
12	322358	8	WASHER, SPRING, Belleville, M8, , FOR CL560 ONLY, FOR CS520, CS540 ONLY
13	89813487	1	ARM, RH, FOR CS520, CS540 ONLY, FOR CL560 ONLY
13	84439325	1	ARM, RH, FOR CS640, CS660 ONLY
13	89813488	1	ARM, LH, FOR CS520, CS540 ONLY, FOR CL560 ONLY
13	84439331	1	ARM, LH, FOR CS640, CS660 ONLY
14	320033	4	HOUSING, , FOR CS520, CS540 ONLY, FOR CL560 ONLY
15	84000052	2	BUSHING, RUBBER, , FOR CL560 ONLY, FOR CS520, CS540 ONLY
16	331175	4	BOLT, Hex, M8 x 75, 8.8, , FOR CS520, CS540 ONLY, FOR CL560 ONLY
17	84446877	4	HOUSING, BEARING, , FOR CS640, CS660 ONLY
18	80442446	2	BUSHING, RUBBER, , FOR CS640, CS660 ONLY, BSN C511
18	84459072	2	BUSHING, RUBBER, , FOR CS640, CS660 ONLY, ASN D512
19	43158	4	BOLT, Hex, M12 x 80, 8.8, , FOR CS640, CS660 ONLY
20	84031772	2	SUPPORT,
21	9504172	1	DEFLECTOR, RH, FOR CS520, CS540 ONLY, FOR CL560 ONLY
21	84439817	1	SUPPORT, RH, FOR CS640, CS660 ONLY
21	9504219	1	KIT, LH, FOR CS520, CS540 ONLY, FOR CL560 ONLY
21	84439805	1	SUPPORT, LH, FOR CS640, CS660 ONLY
22	378244	8	WASHER, M10, , FOR CS520, CS540 ONLY, FOR CL560 ONLY
23	43140	8	BOLT, Hex, M10 x 30, 8.8, Full Thd,
24	9504180	2	ARM,
25	120074	4	BOLT, Hex, M10 x 90, 8.8,
26	89508617	AR	PLATE, ADJUSTING,
27	89508615	2	PLATE,
28	387449	4	HALF-FLANGE,
29	80395394	2	BUSHING,
30	84023740	2	PLATE, COVER,
31	100037	4	NUT, M10 x 1.5, Cl 8,
32	9706702	1	BOLT, Hex, M12 x 50, 8.8,
33	330413	1	BOLT, BANJO,
34	86629541	5	BOLT, Hex, M12 x 40, 8.8, Full Thd,
35	84334522	2	HOUSING, BEARING,
36	9504183	2	AXLE, FRONT,

15.219(01) SHAKER SHOE DRIVE

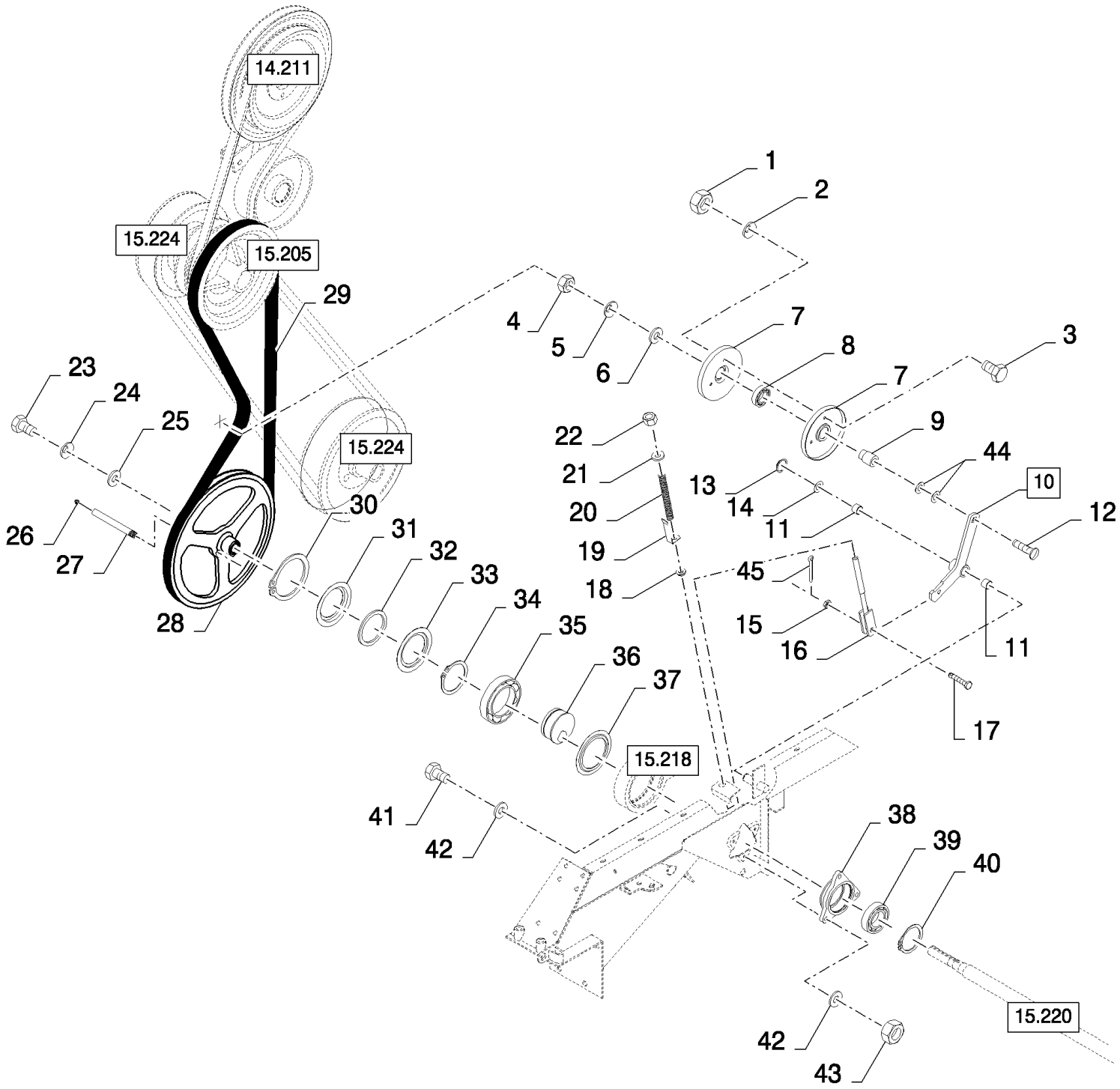

CS660 COMBINE BASE UNIT (1/03-) - Cleaning

15.219(01) SHAKER SHOE DRIVE

ссылка	Номер детали	Кол-во	Описание
1	89706690	3	NUT, M8, Cl 8,
2	322358	3	WASHER, SPRING, Belleville, M8,
3	16043224	3	BOLT, Hex, M8 x 16, 8.8, Full Thd,
4	100020	1	NUT, M16, Cl 8,
5	140048	1	WASHER, SPRING, Belleville, M16,
6	378246	1	WASHER, {PP:80378246} 16MM
7	84334051	2	HALF-PULLEY,
8	443898	1	BEARING, BALL, {PP:80443898}
9	395278	1	RING, {PP:80395278}
10	84444152	1	LEVER, (11)
11	84057311	2	SLEEVE,
12	120048	1	BOLT, CARRIAGE, Short NK, M16 x 80, Cl8.8,
13	370002	1	RING, SNAP, {PP:80370002} M25, Ext,
14	140229	1	WASHER, {PP:80140229} 26MM
14	140103	1	WASHER, {PP:80140103} 26MM
15	86629542	1	NUT, LOCK, M8 x 1.25, Cl 8,
15	140016	1	WASHER, M8 x 16 x 1.6,
16	84443958	1	ROD,
17	412479	1	BOLT, Hex, M8 x 35, 8.8,
17	335040	1	PIN, CLEVIS, {PP:80335040} M8 x 28,
18	439857	1	BUSHING, {PP:80439857}
19	84057943	1	INDICATOR, , BSN C383
19	84980884	1	INDICATOR, , ASN D384
20	337829	1	SPRING, {PP:80337829}
21	378245	1	WASHER, M12,
22	412126	1	NUT, LOCK, M12 x 1.75, Cl 8,
23	300388	1	BOLT, Hex, M12 x 25, 8.8,
24	140046	1	WASHER, SPRING, Belleville, M12,
25	9511052	1	WASHER, {PP:89511052} M12 x 44 x 4, 12MM
25	80395606	1	WASHER, 12MM
26	321204	1	NIPPLE, LUBE, {PP:80321204} M6 x 1, 16mm lg,
27	89818440	1	TUBE,
28	84077988	1	PULLEY,
29	84817635	1	BELT, TRANSMISSION,
30	388294	1	RING, SNAP, {PP:80388294} M125, Int,
31	392106	1	FLANGE, {PP:80392106}
32	410063	1	SEAL, FELT, {PP:80410063}
33	392105	1	COVER, {PP:80392105}
34	370009	1	RING, SNAP, {PP:80370009} M80, Ext,
35	210039	1	BEARING, BALL, {PP:80210039}
36	9504210	1	BLOCK, {PP:89504210}
37	388427	1	RING, {PP:80388427}
38	80387566	1	HOUSING,
39	320557	1	BEARING ASSY, {PP:80320557}
40	80300633	1	RING, SNAP,

15.219(01) SHAKER SHOE DRIVE

ссылка	Номер детали	Кол-во	Описание
41	9706704	6	BOLT, Hex, M10 x 35, 8.8, Full Thd,
42	394629	12	WASHER, LOCK, {PP:80394629} 10MM
43	100037	6	NUT, M10 x 1.5, Cl 8,
44	140090	AR	WASHER, {PP:80140090} 17MM
45	9512667	1	PIN, SPLIT (COTTER), {PP:89512667} M2 x 20,

15.220(01) SHAKER SHOE DRIVE

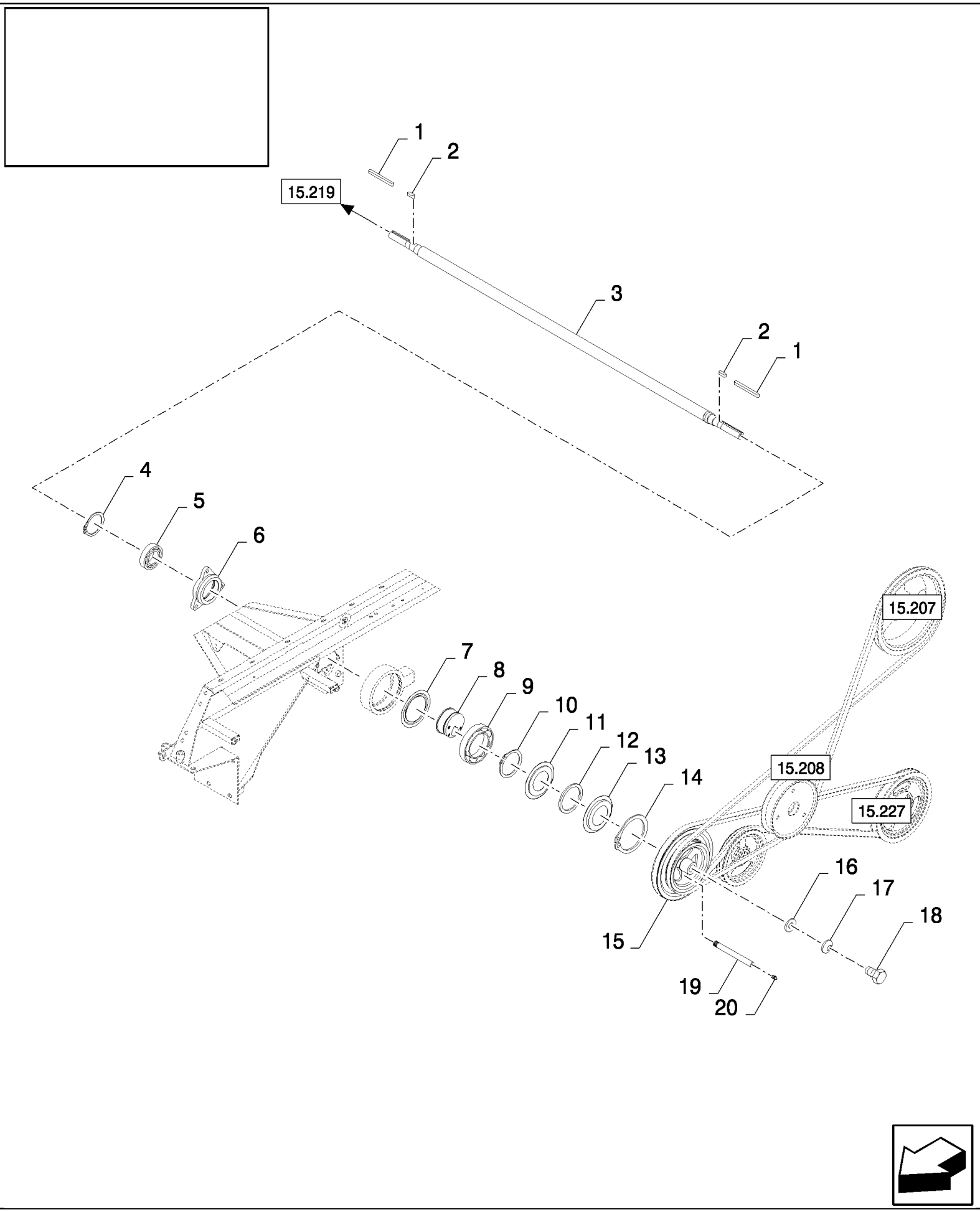

CS660 COMBINE BASE UNIT (1/03-) - Cleaning

15.220(01) SHAKER SHOE DRIVE

ссылка	Номер детали	Кол-во	Описание
1	170035	2	KEY, {PP:80170035}
2	170030	2	KEY, {PP:80170030} M8 x 7 x 32, Par,
3	84432016	1	SHAFT, , FOR CL560 ONLY, FOR CS520, CS540 ONLY
3	84077978	1	SHAFT, , FOR CS640, CS660 ONLY
4	80300633	1	RING, SNAP,
5	320557	1	BEARING ASSY, {PP:80320557}
6	80387566	1	HOUSING,
7	388427	1	RING, {PP:80388427}
8	9504210	1	BLOCK, {PP:89504210}
9	210039	1	BEARING, BALL, {PP:80210039}
10	370009	1	RING, SNAP, {PP:80370009} M80, Ext,
11	392105	1	COVER, {PP:80392105}
12	410063	1	SEAL, FELT, {PP:80410063}
13	392106	1	FLANGE, {PP:80392106}
14	388294	1	RING, SNAP, {PP:80388294} M125, Int,
15	84077982	1	PULLEY,
16	9511052	1	WASHER, {PP:89511052} M12 x 44 x 4, 12MM
16	80395606	1	WASHER, 12MM
17	140046	1	WASHER, SPRING, Belleville, M12,
18	300388	1	BOLT, Hex, M12 x 25, 8.8,
19	89818440	1	TUBE,
20	321204	1	NIPPLE, LUBE, {PP:80321204} M6 x 1, 16mm lg,

15.221(01) EXTENDED DIVIDERS

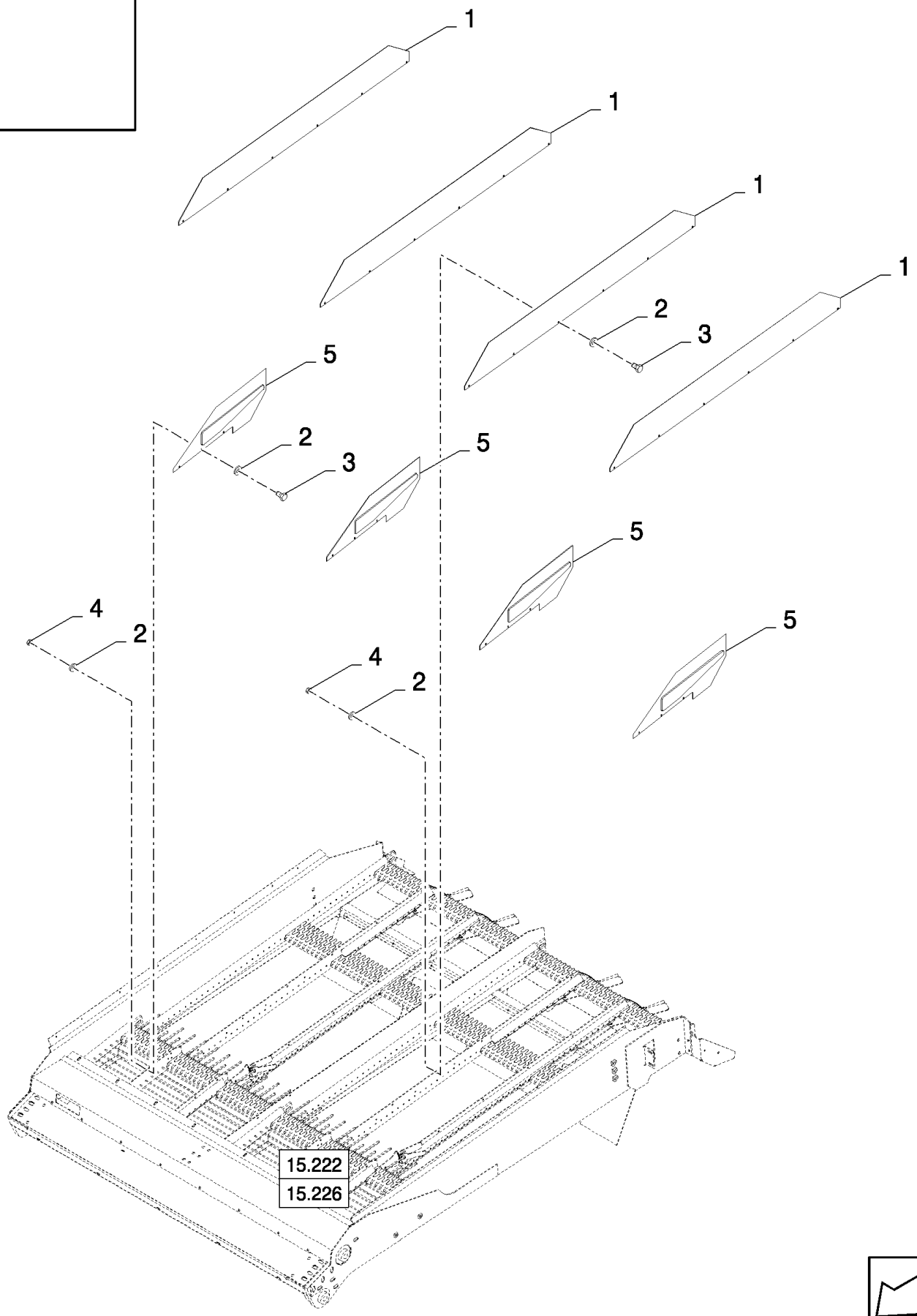

CS660 COMBINE BASE UNIT (1/03-) - Cleaning

15.221(01) EXTENDED DIVIDERS

ссылка	Номер детали	Кол-во	Описание
1	84442490	4	DEFLECTOR,
2	322356	72	WASHER, LOCK, {PP:80322356} 5MM
3	300806	36	BOLT, Hex, M5 x 10, 8.8, Full Thd,
4	86508813	36	NUT, M5, Cl 8,
5	84442195	4	DEFLECTOR,

15.222(01) UPPER SIEVES - SELF-LEVELLING

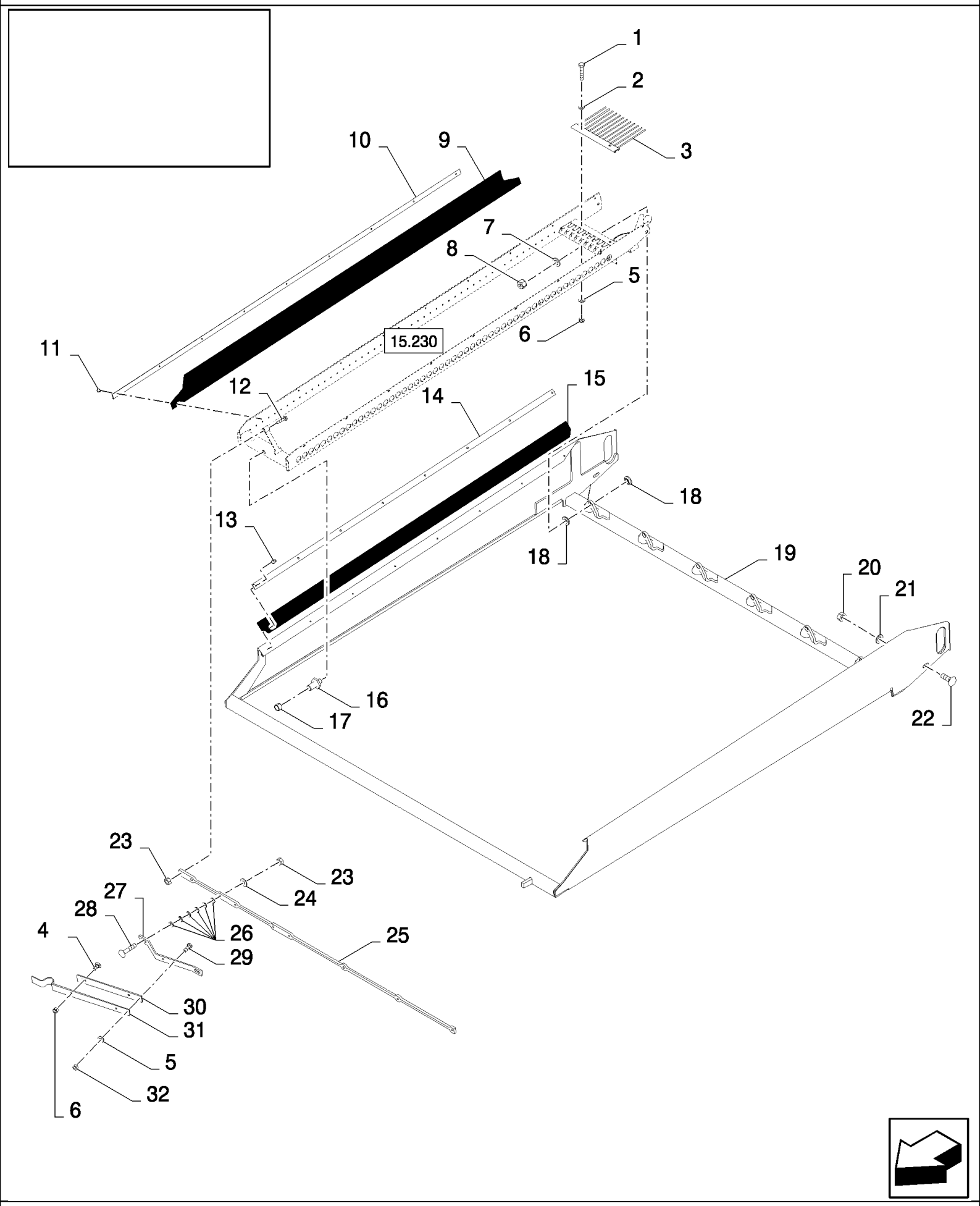

CS660 COMBINE BASE UNIT (1/03-) - Cleaning

15.222(01) UPPER SIEVES - SELF-LEVELLING

ссылка	Номер детали	Кол-во	Описание
1	43118	AR	BOLT, Hex, M6 x 40, 8.8,
2	86588450	AR	WASHER, M6,
3	80922395	AR	SIEVE, , HC 1 5/8"
3	80919977	AR	RACK, , HC 1 1/8"
4	86512439	1	BOLT, CARRIAGE, Short NK, M6 x 16, Cl8.8, Full Thd,
5	322357	AR	WASHER, SPRING, Belleville, M6,
6	353308	AR	NUT, LOCK, M6 x 1, Cl 8,
7	140017	AR	WASHER, M10 x 20 x 2,
8	412141	AR	NUT, LOCK, M10 x 1.5, Cl 8,
9	84436002	AR	CANVAS,
10	84436103	AR	PLATE, FIXING,
11	89832321	AR	RIVET, , BSN C407
11	84457966	AR	RIVET, , ASN D408
12	43129	AR	BOLT, Hex, M8 x 40, 8.8,
13	NS	AR	NOT SERVICED, Rivet
14	435587	2	PLATE, FIXING, {PP:80435587}
15	9502212	2	GASKET, {PP:89502212}
16	80920236	AR	PIN,
17	80919875	AR	RING,
18	80919958	AR	SPACER,
19	84436030	1	FRAME, , FOR CS520, CS540 ONLY
19	84436031	1	FRAME, , FOR CS640, CS660 ONLY
20	100016	2	NUT, M10, Cl 8,
21	412655	2	WASHER, SPRING, Belleville, M10,
22	86512446	2	BOLT, CARRIAGE, Short NK, M10 x 30, Cl8.8, Full Thd,
23	89706690	AR	NUT, M8, Cl 8,
24	322358	2	WASHER, SPRING, Belleville, M8,
25	84436084	1	BRACKET, , FOR CS520, CS540 ONLY
25	84074015	1	BRACKET, , FOR CS640, CS660 ONLY
26	9824259	AR	WASHER, {PP:89824259} M6 x 12 x 1.6,
26	378243	AR	WASHER, {PP:80378243} M8,
27	80919626	1	BRACKET,
28	86512444	2	BOLT, CARRIAGE, Short NK, M8 x 40, Cl8.8, Full Thd, M8x40
29	120100	2	BOLT, Hex, M6 x 20, 8.8,
30	89505278	1	SPRING,
31	89505279	1	PLATE,
32	15896221	2	NUT, M6, Cl 10,

15.223(01) FAN VARI-DRIVE

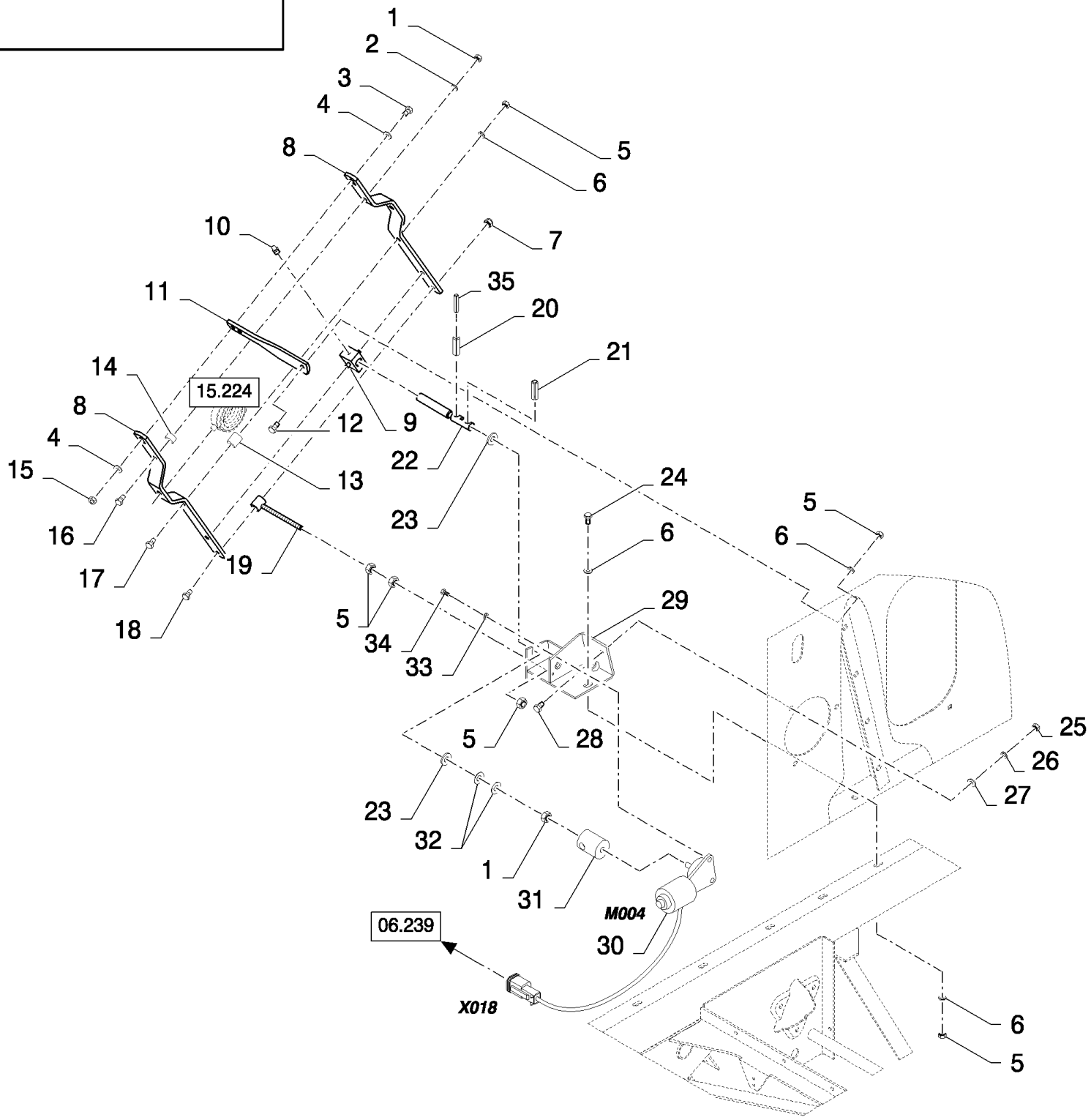

CS660 COMBINE BASE UNIT (1/03-) - Cleaning

15.223(01) FAN VARI-DRIVE

ссылка	Номер детали	Кол-во	Описание
1	89706690	2	NUT, M8, Cl 8,
2	322358	1	WASHER, SPRING, Belleville, M8,
3	120069	1	BOLT, Hex, M10 x 50, 8.8,
4	378244	2	WASHER, M10,
5	100016	7	NUT, M10, Cl 8,
6	140045	4	WASHER, SPRING, Belleville, M10,
7	86629542	1	NUT, LOCK, M8 x 1.25, Cl 8,
8	84076709	2	ARM,
9	89831500	1	ADJUSTER, ADJUSTER, BSN C367
9	84453114	1	ADJUSTER, , ASN D368
10	323713	1	NIPPLE, LUBE, {PP:80323713} 6MM
11	84076718	1	ARM,
12	43140	1	BOLT, Hex, M10 x 30, 8.8, Full Thd,
13	84439930	1	BUSHING,
14	334055	1	SPACER, {PP:80334055}
15	100037	1	NUT, M10 x 1.5, Cl 8,
16	43129	1	BOLT, Hex, M8 x 40, 8.8,
17	412217	1	BOLT, {PP:80412217} Hex, M10 x 55, 8.8, M10x55
18	43130	1	BOLT, Hex, M8 x 50, 8.8,
19	84076788	1	ROD,
20	9511051	2	PIN, LOCK, {PP:89511051} M6 x 30, Slotted, , BSN C391
20	86548577	2	PIN, LOCK, M8 x 40, Slotted, , ASN D392
21	300868	1	PIN, LOCK, {PP:80300868} M6 x 36, Slotted, , BSN C391
21	300872	1	PIN, LOCK, {PP:80300872} M8 x 36, Slotted, , ASN D392
22	84076768	1	SHAFT, , BSN C367
22	84453047	1	SHAFT, , BSN F368391
22	84455902	1	SHAFT, , BSN F392479
22	87368039	1	SHAFT, , ASN D480
23	80456510	2	WASHER, 20MM, BSN C391
23	536293	2	WASHER, , BSN F392479
23	86592703	2	WASHER, M20 x 50 x 6, HT, , ASN D480
24	9706704	1	BOLT, Hex, M10 x 35, 8.8, Full Thd,
25	9706685	1	NUT, M12, Cl 8,
26	140046	1	WASHER, SPRING, Belleville, M12,
27	378245	1	WASHER, M12,
28	9706687	1	BOLT, Hex, M12 x 30, 8.8,
29	84076720	1	SUPPORT, , BSN C391
29	84455770	1	MOUNT, ENGINE, , BSN F392479
29	87331052	1	MOUNT, ENGINE, , ASN D480
30	86579537	1	MOTOR, ELECTRIC,
31	89831501	1	BUSHING,
32	350606	2	RING, , BSN C391
32	394632	1	WASHER, M20 x 40 x 4, HT, , BSN F392479
33	322357	3	WASHER, SPRING, Belleville, M6,
34	86508568	3	BOLT, Hex, M6 x 16, 8.8,

15.223(01) FAN VARI-DRIVE

ссылка	Номер детали	Кол-во	Описание
35	321950	2	PIN, , BSN C479
35	86977792	2	PIN, LOCK, M5 x 40, Slotted, , ASN D480

15.224(01) FAN VARI-DRIVE

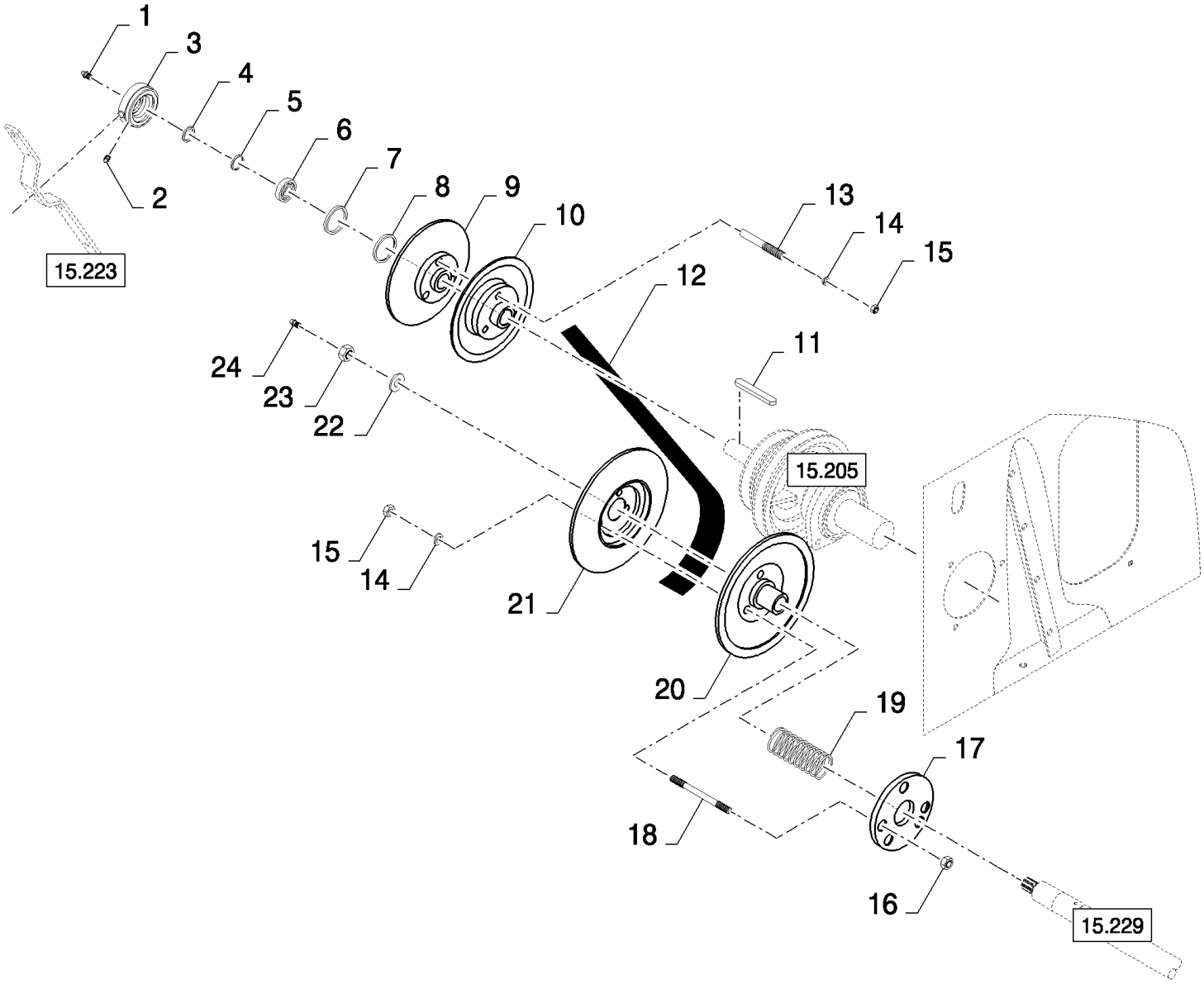

15.224(01) FAN VARI-DRIVE

ссылка	Номер детали	Кол-во	Описание
1	332038	1	NIPPLE, LUBE, {PP:80332038}
2	332040	1	NIPPLE, LUBE, {PP:80332040} 90є, 1/8" NPT x .84" lg,
3	84807862	1	HOUSING, BEARING,
4	220010	1	ELEMENT, SEALING, {PP:80220010}
5	320397	1	RING, {PP:80320397}
6	210054	1	BEARING, NEEDLE, {PP:80210054}
7	309088	1	ELEMENT, SEALING, {PP:80309088}
8	320399	1	RING, {PP:80320399}
9	84334068	1	PULLEY,
10	84334100	1	PULLEY,
11	354775	1	KEY, {PP:80354775}
12	84073979	1	BELT, TRANSMISSION,
13	110055	3	STUD, {PP:80110055}
14	140048	6	WASHER, SPRING, Belleville, M16,
15	100020	6	NUT, M16, Cl 8,
16	86000441	3	NUT, LOCK, M16 x 2, Cl 8,
17	84437593	1	RING,
18	350617	3	STUD, {PP:80350617}
19	334054	1	SPRING, {PP:80334054}
20	84334072	1	PULLEY,
21	84334092	1	PULLEY,
22	86592703	1	WASHER, M20 x 50 x 6, HT,
23	100085	1	NUT, M20 x 1.5, Cl 8,
24	321204	1	NIPPLE, LUBE, {PP:80321204} M6 x 1, 16mm lg,

15.225(01) SHAKER SHOE

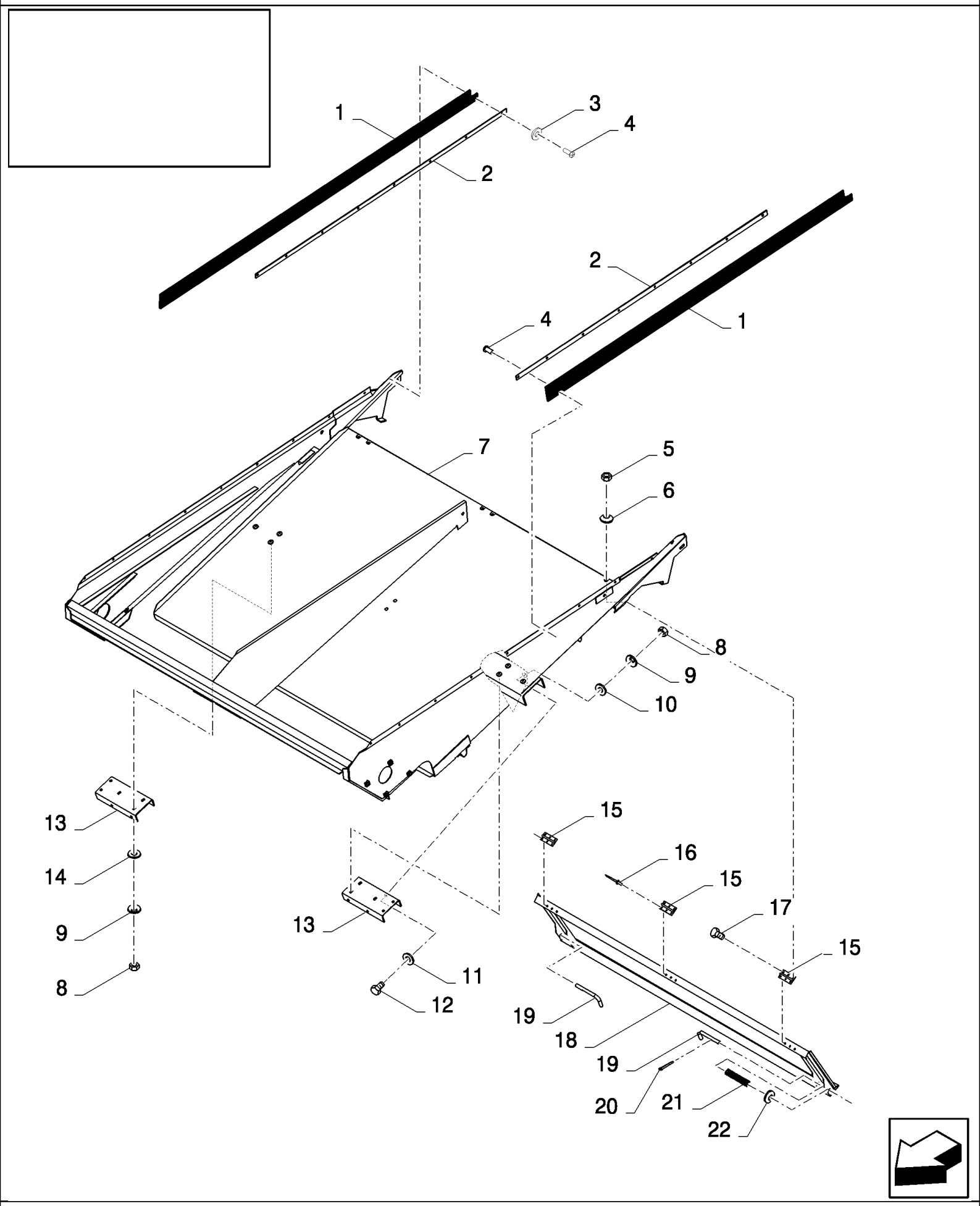

CS660 COMBINE BASE UNIT (1/03-) - Cleaning

15.225(01) SHAKER SHOE

ссылка	Номер детали	Кол-во	Описание
1	9503288	2	SPACER, {PP:89503288}
2	84438981	2	PLATE, FIXING,
3	140040	4	WASHER, M6 x 22 x 2,
4	NSS	20	NOT SERVICED SEPARATELY, Rivet
5	86508813	6	NUT, M5, Cl 8,
6	322356	6	WASHER, LOCK, {PP:80322356} 5MM
7	84435069	1	SHOE, SHAKER, , FOR CL560 ONLY, FOR CS520, CS540 ONLY
7	84434774	1	SHOE, SHAKER, , FOR CS640, CS660 ONLY
8	89706690	10	NUT, M8, Cl 8,
9	322358	10	WASHER, SPRING, Belleville, M8,
10	140041	4	WASHER, M8 x 28 x 3,
11	86511315	4	WASHER, M8 x 16 x 1.6,
12	43127	4	BOLT, Hex, M8 x 25, 8.8,
13	84434757	2	SUPPORT,
14	80394628	6	WASHER, LOCK, 8MM
15	350083	3	HINGE, {PP:80350083}
16	NSS	9	NOT SERVICED SEPARATELY, Rivet
17	300806	6	BOLT, Hex, M5 x 10, 8.8, Full Thd,
18	84432760	1	COVER, , FOR CS520, CS540 ONLY, FOR CL560 ONLY
18	84434351	1	COVER, , FOR CS640, CS660 ONLY
19	394549	2	HANDLE, {PP:80394549}
20	130003	2	PIN, SPLIT (COTTER), {PP:80130003} M3.2 x 20,
21	84814911	2	SPRING, , BSN C323
21	84814911	2	SPRING, , ASN D324
22	140223	2	WASHER, {PP:80140223} 13MM

15.226(01) SIEVES

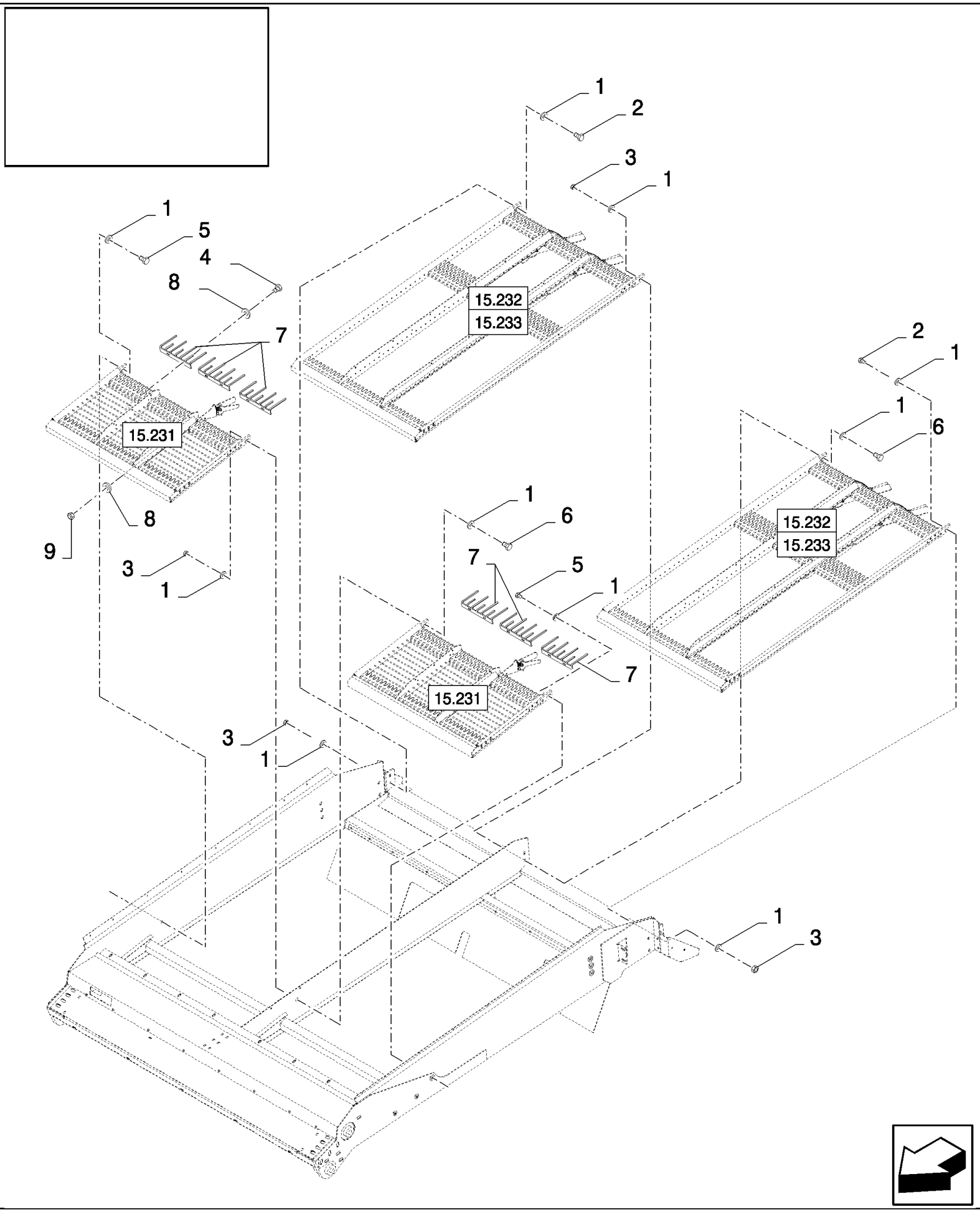

CS660 COMBINE BASE UNIT (1/03-) - Cleaning

15.226(01) SIEVES

ссылка	Номер детали	Кол-во	Описание
1	140045	AR	WASHER, SPRING, Belleville, M10,
2	43140	2	BOLT, Hex, M10 x 30, 8.8, Full Thd,
3	100016	AR	NUT, M10, Cl 8,
4	120102	AR	BOLT, Hex, M6 x 40, 8.8, Full Thd,
5	43138	2	BOLT, Hex, M10 x 20, 8.8, Full Thd,
6	9706704	2	BOLT, Hex, M10 x 35, 8.8, Full Thd, , FOR CS640, CS660 ONLY
7	84446427	AR	RAKE,
8	412649	AR	WASHER, SPRING, Belleville, M6,
9	15896221	AR	NUT, M6, Cl 10,

15.227(01) GRAIN ELEVATOR BOTTOM DRIVE

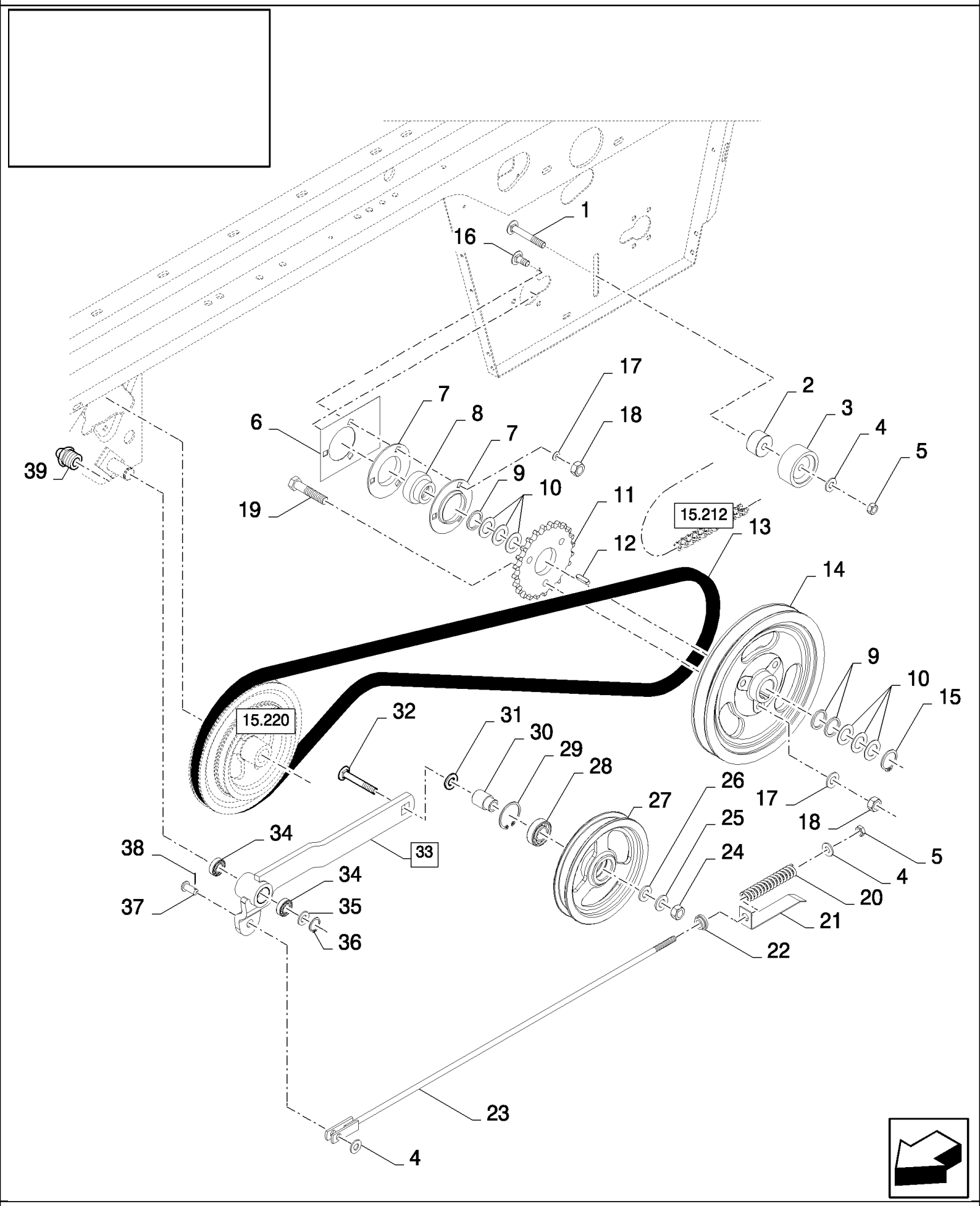

15.227(01) GRAIN ELEVATOR BOTTOM DRIVE

ссылка	Номер детали	Кол-во	Описание
1	300662	1	BOLT, CARRIAGE, Short NK, M12 x 80, Cl8.8,
2	84980957	1	BUSHING,
3	334970	1	PINION, IDLER, {PP:80334970}
4	378245	3	WASHER, M12,
5	412126	2	NUT, LOCK, M12 x 1.75, Cl 8,
6	84980956	1	PLATE,
7	40697	2	FLANGE, {PP:80040697}
8	325106	1	BEARING ASSY, {PP:80325106}
9	140110	3	WASHER, {PP:80140110} 31MM
10	140108	6	WASHER, {PP:80140108} 31MM
11	84981311	1	SPROCKET, DRIVEN,
12	170008	1	KEY, {PP:80170008}
13	80422731	1	BELT, TRANSMISSION,
14	84980572	1	PULLEY,
15	370003	1	RING, SNAP, {PP:80370003} M30, Ext,
16	86633356	3	BOLT, CARRIAGE, Short NK, M10 x 25, Cl8.8, Full Thd,
17	140045	6	WASHER, SPRING, Belleville, M10,
18	100037	6	NUT, M10 x 1.5, Cl 8,
19	120070	3	BOLT, Hex, M10 x 60, 8.8,
20	385307	1	SPRING, {PP:80385307}
21	84980884	1	INDICATOR, , BSN C383
21	84057943	1	INDICATOR, , ASN D384
22	439857	1	BUSHING, {PP:80439857}
23	84443895	1	ROD,
24	100020	1	NUT, M16, Cl 8,
25	140048	1	WASHER, SPRING, Belleville, M16,
26	378246	1	WASHER, {PP:80378246} 16MM
27	84980958	1	PULLEY,
28	80034439	1	BEARING ASSY,
29	370011	1	RING, SNAP, {PP:80370011} M52, Int,
30	395278	1	RING, {PP:80395278}
31	393062	AR	WASHER, {PP:80393062} 17MM
32	120048	1	BOLT, CARRIAGE, Short NK, M16 x 80, Cl8.8,
33	84981645	1	LEVER, (34)
34	84057311	2	SLEEVE,
35	338206	1	WASHER, {PP:80338206} 26MM
36	370002	1	RING, SNAP, {PP:80370002} M25, Ext,
37	412209	1	PIN, CLEVIS, {PP:80412209} M12 x 30,
38	130003	1	PIN, SPLIT (COTTER), {PP:80130003} M3.2 x 20,
39	321204	1	NIPPLE, LUBE, {PP:80321204} M6 x 1, 16mm lg, , ASN D416

15.228(01) FAN, FRAME

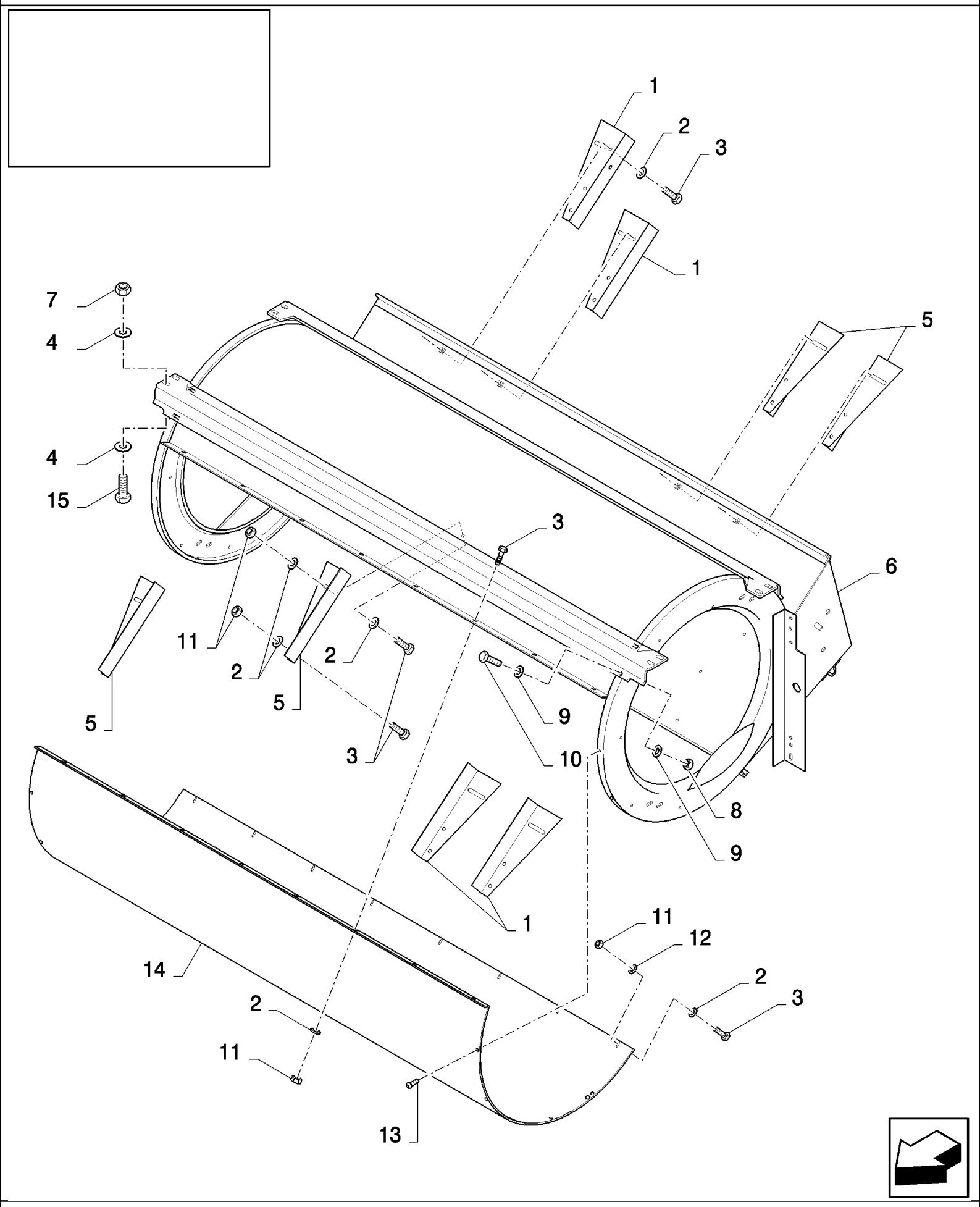

CS660 COMBINE BASE UNIT (1/03-) - Cleaning

15.228(01) FAN, FRAME

ссылка	Номер детали	Кол-во	Описание
1	331712	AR	PLATE, {PP:80331712}
2	322357	AR	WASHER, SPRING, Belleville, M6,
3	86508568	AR	BOLT, Hex, M6 x 16, 8.8,
4	378244	16	WASHER, M10,
5	331713	AR	SUPPORT, {PP:80331713}
6	84432499	1	HOUSING, FAN, , FOR CS520, CS540 ONLY, FOR CL560 ONLY
6	84806955	1	HOUSING, FAN, , FOR CS640, CS660 ONLY
7	100037	8	NUT, M10 x 1.5, Cl 8,
8	89706690	8	NUT, M8, Cl 8,
9	322358	AR	WASHER, SPRING, Belleville, M8,
10	43127	8	BOLT, Hex, M8 x 25, 8.8,
11	15896221	AR	NUT, M6, Cl 10,
12	412649	AR	WASHER, SPRING, Belleville, M6,
13	353075	10	SCREW, {PP:80353075}
14	84806954	1	COVER, , FOR CS520, CS540 ONLY, FOR CL560 ONLY
14	84806956	1	COVER, , FOR CS640, CS660 ONLY
15	43140	8	BOLT, Hex, M10 x 30, 8.8, Full Thd,

15.229(01) FAN, BLOWER AND GUIDES

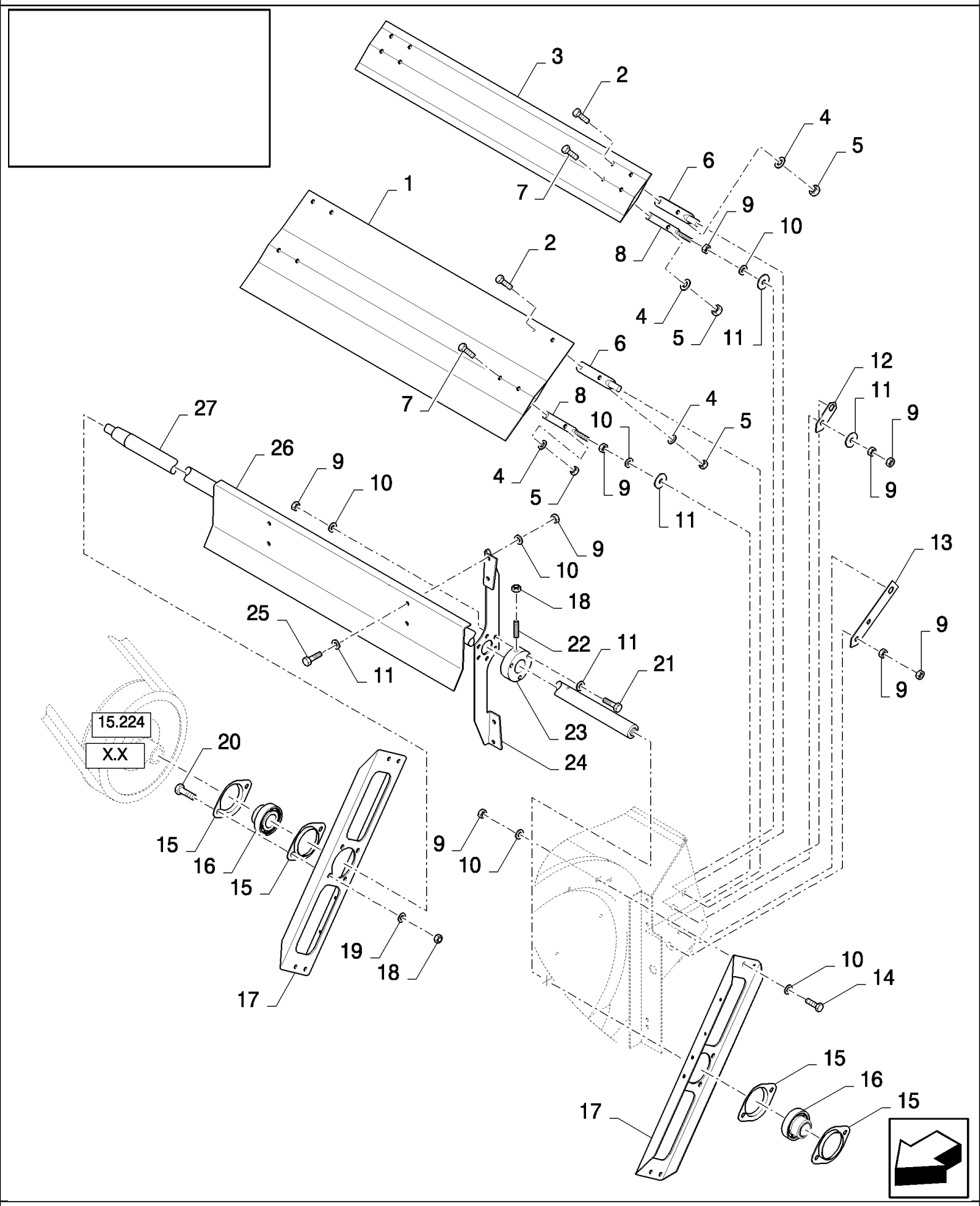

CS660 COMBINE BASE UNIT (1/03-) - Cleaning

15.229(01) FAN, BLOWER AND GUIDES

ссылка	Номер детали	Кол-во	Описание
1	80393507	1	DEFLECTOR, , FOR CS520, CS540 ONLY, FOR CL560 ONLY
1	84022819	1	DEFLECTOR, , FOR CS640, CS660 ONLY
2	120100	8	BOLT, Hex, M6 x 20, 8.8,
3	80420225	1	DEFLECTOR, , FOR CS520, CS540 ONLY, FOR CL560 ONLY
3	84022805	1	DEFLECTOR, , FOR CS640, CS660 ONLY
4	322357	16	WASHER, SPRING, Belleville, M6,
5	15896221	16	NUT, M6, Cl 10,
6	482006	4	SCREW, {PP:80482006}
7	86508568	8	BOLT, Hex, M6 x 16, 8.8,
8	340039	4	SCREW, {PP:80340039}
9	89706690	65	NUT, M8, Cl 8,
10	322358	65	WASHER, SPRING, Belleville, M8,
11	140041	AR	WASHER, M8 x 28 x 3,
12	484811	2	INDICATOR, {PP:80484811}
13	333383	2	INDICATOR, {PP:80333383}
14	16043224	8	BOLT, Hex, M8 x 16, 8.8, Full Thd,
15	136978	4	FLANGE, {PP:80136978}
16	84814912	2	BEARING, BALL,
17	84433291	2	SUPPORT,
18	100016	7	NUT, M10, Cl 8,
19	140045	4	WASHER, SPRING, Belleville, M10,
20	43138	4	BOLT, Hex, M10 x 20, 8.8, Full Thd,
21	43130	9	BOLT, Hex, M8 x 50, 8.8,
22	391136	3	SET SCREW, {PP:80391136} Hex Soc, M10 x 40, M8x40
23	80393985	3	HUB,
24	80393759	9	SUPPORT, , FOR CS520, CS540 ONLY, FOR CL560 ONLY
24	84031906	9	SUPPORT, , FOR CS640, CS660 ONLY
25	120104	36	BOLT, Hex, M8 x 20, 8.8,
26	80755448	6	BLADE, , FOR CS520, CS540 ONLY, FOR CL560 ONLY
26	84031907	6	BLADE, , FOR CS640, CS660 ONLY
27	84433058	1	SHAFT, , FOR CS520, CS540 ONLY, FOR CL560 ONLY
27	84071760	1	SHAFT, , FOR CS640, CS660 ONLY

15.230(01) UPPER SIEVE, SELF-LEVELLING

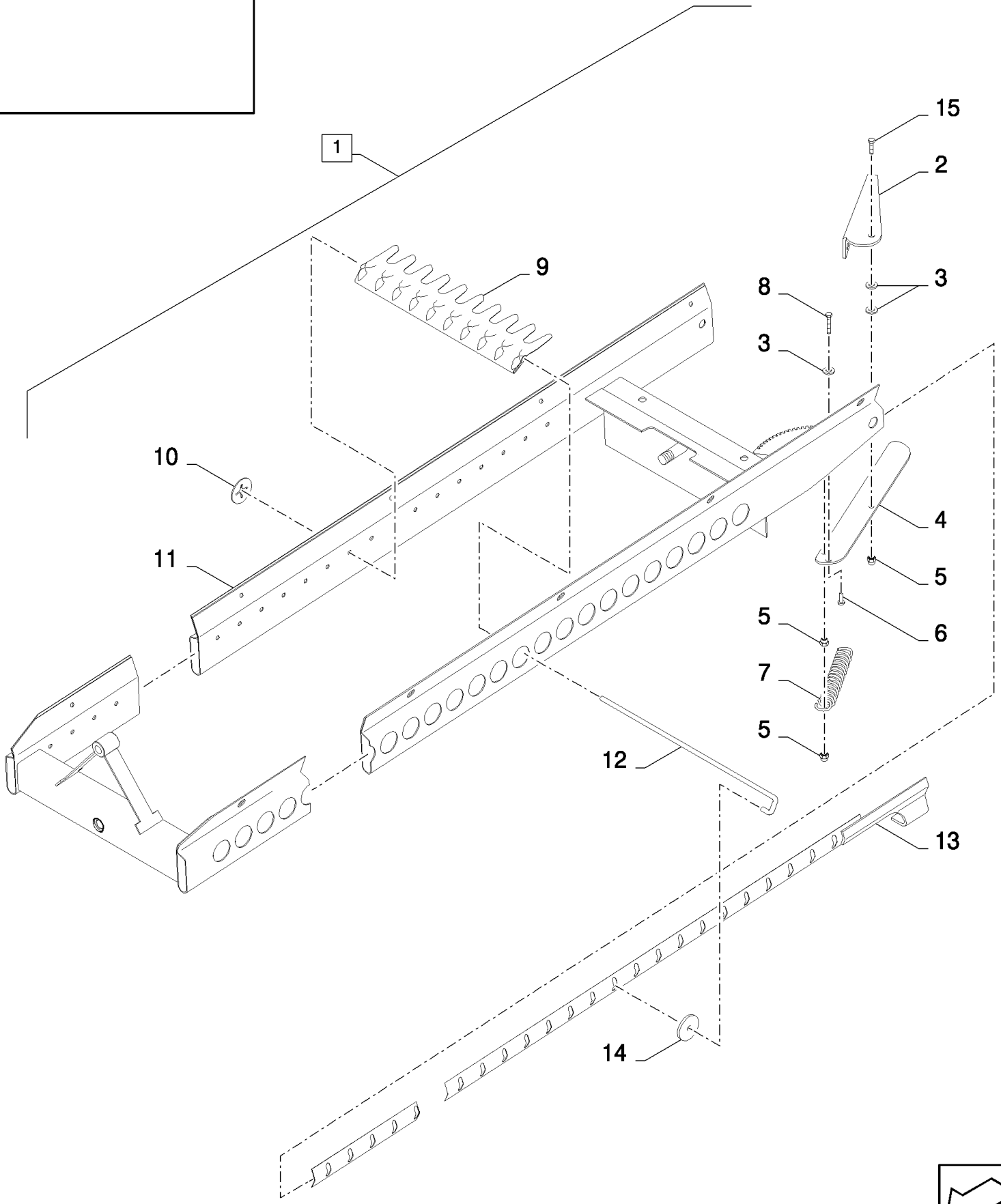

CS660 COMBINE BASE UNIT (1/03-) - Cleaning

15.230(01) UPPER SIEVE, SELF-LEVELLING

ссылка	Номер детали	Кол-во	Описание
1	84436039	1	SIEVE, (2 to 15), HC 1 1/8"
1	84436040	1	SIEVE, (2 to 15), HC 1 5/8"
2	80919945	1	TAB, LOCKING,
3	9824259	3	WASHER, M6 x 12 x 1.6,
4	84068930	1	HANDLE,
5	353308	3	NUT, LOCK, M6 x 1, Cl 8,
6	NS	1	NOT SERVICED, Rivet
7	338713	1	SPRING, {PP:80338713}
8	43117	1	BOLT, Hex, M6 x 30, 8.8,
9	84068920	51	PLATE, COVER, , HC 1 1/8"
9	80922328	35	PLATE, COVER, , HC 1 5/8"
10	398561	5	CLIP, {PP:80398561}
11	NS	1	NOT SERVICED,
12	84436001	AR	WIRE, RETAINING,
13		1	
14	140182	5	WASHER, M5 x 18 x 2,
15	86508568	1	BOLT, Hex, M6 x 16, 8.8,

15.231(01) FRONT SIEVE 1 1/8" - 1 5/8"

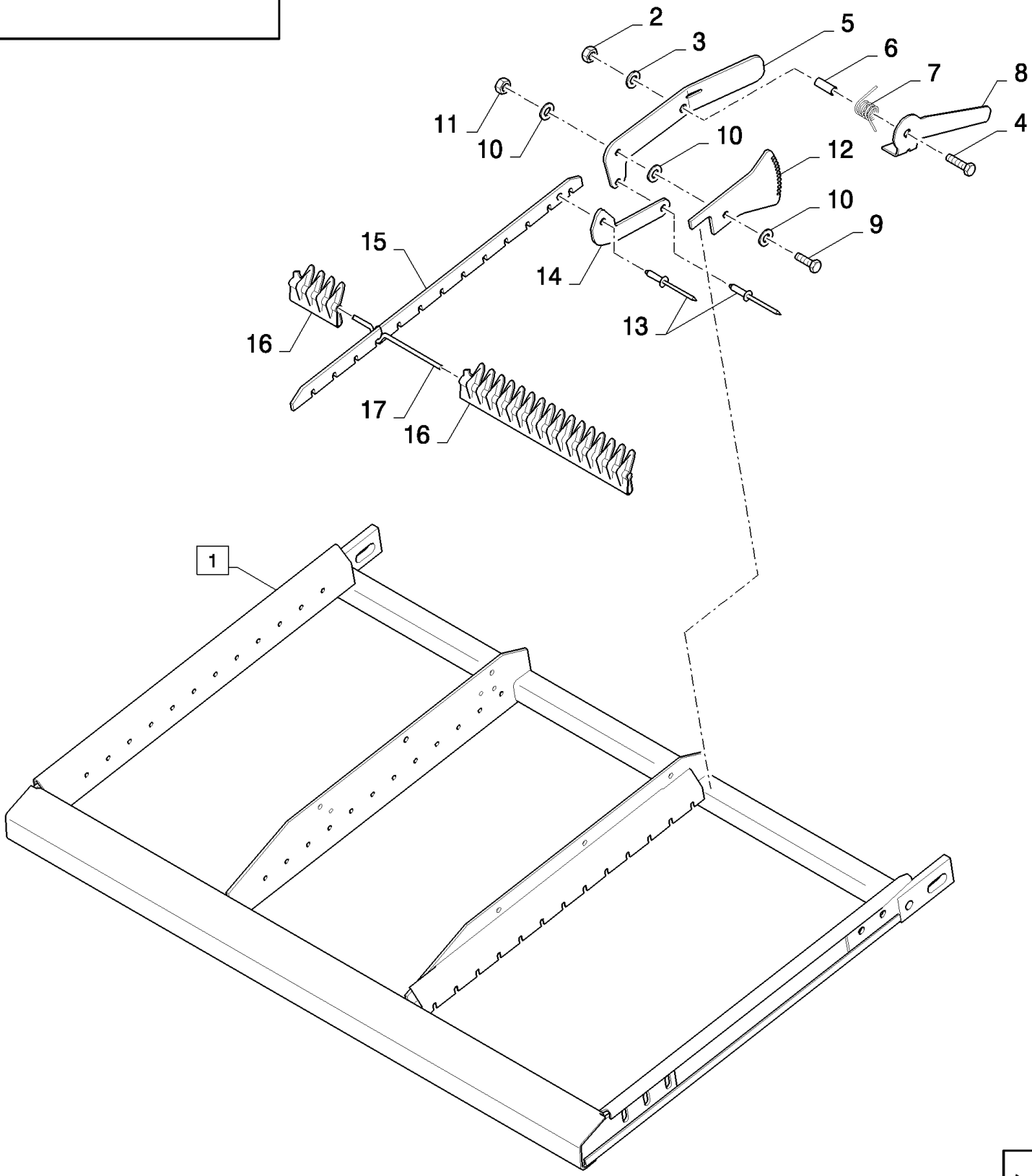

CS660 COMBINE BASE UNIT (1/03-) - Cleaning

15.231(01) FRONT SIEVE 1 1/8" - 1 5/8"

ссылка	Номер детали	Кол-во	Описание
1	84442347	1	SIEVE, , FOR CL560 ONLY, FOR CS520, CS540 ONLY, FOR SIEVE 1 1/8" ONLY
1	84442356	2	SIEVE, , FOR SIEVE 1 1/8" ONLY, FOR CS640, CS660 ONLY
1	84442346	1	SIEVE, , FOR CS520, CS540 ONLY, FOR SIEVE 1 5/8" ONLY, FOR CL560 ONLY
1	84442355	2	SIEVE, , FOR SIEVE 1 5/8" ONLY, FOR CS640, CS660 ONLY
2	15896221	1	NUT, M6, Cl 10,
2	353308	1	NUT, LOCK, M6 x 1, Cl 8, , FOR CL560 ONLY
3	322357	1	WASHER, SPRING, Belleville, M6,
4	86512441	1	BOLT, CARRIAGE, Short NK, M6 x 30, Cl8.8, Full Thd, M6x30, FOR CL560 ONLY, FOR CS520, CS540 ONLY
4	86639146	1	BOLT, CARRIAGE, Short NK, M6 x 35, Cl8.8, Full Thd, , FOR CS640, CS660 ONLY
5	84442030	1	TOOTHED SECTOR,
6	84442028	1	BUSHING,
7	84441976	1	SPRING,
8	84442029	1	HANDLE,
9	120100	1	BOLT, Hex, M6 x 20, 8.8,
10	140040	3	WASHER, M6 x 22 x 2,
11	353308	1	NUT, LOCK, M6 x 1, Cl 8,
12	84442031	1	PLATE,
13	NS	2	NOT SERVICED, Rivet
14	84442032	1	PLATE,
15	84442033	1	LOCK, , FOR SIEVE 1 1/8" ONLY
15	84442252	1	PLATE, , FOR SIEVE 1 5/8" ONLY
16	324715	65	BAR, {PP:80324715} , FOR CS520, CS540 ONLY, FOR CL560 ONLY, FOR SIEVE 1 1/8" ONLY
16	324715	39	BAR, {PP:80324715} , FOR SIEVE 1 1/8" ONLY, FOR CS640, CS660 ONLY
16	80396505	45	BAR, , FOR CS520, CS540 ONLY, FOR SIEVE 1 5/8" ONLY, FOR CL560 ONLY
16	80396505	27	BAR, , FOR SIEVE 1 5/8" ONLY, FOR CS640, CS660 ONLY
17	80394836	13	PROP, , FOR CS520, CS540 ONLY, FOR CL560 ONLY, FOR SIEVE 1 1/8" ONLY
17	80388354	13	, FOR SIEVE 1 1/8" ONLY, FOR CS640, CS660 ONLY
17	80394836	9	PROP, , FOR CS520, CS540 ONLY, FOR SIEVE 1 5/8" ONLY, FOR CL560 ONLY
17	80388354	9	, FOR SIEVE 1 5/8" ONLY, FOR CS640, CS660 ONLY

15.232(01) UPPER SIEVES - HC 1 1/8"

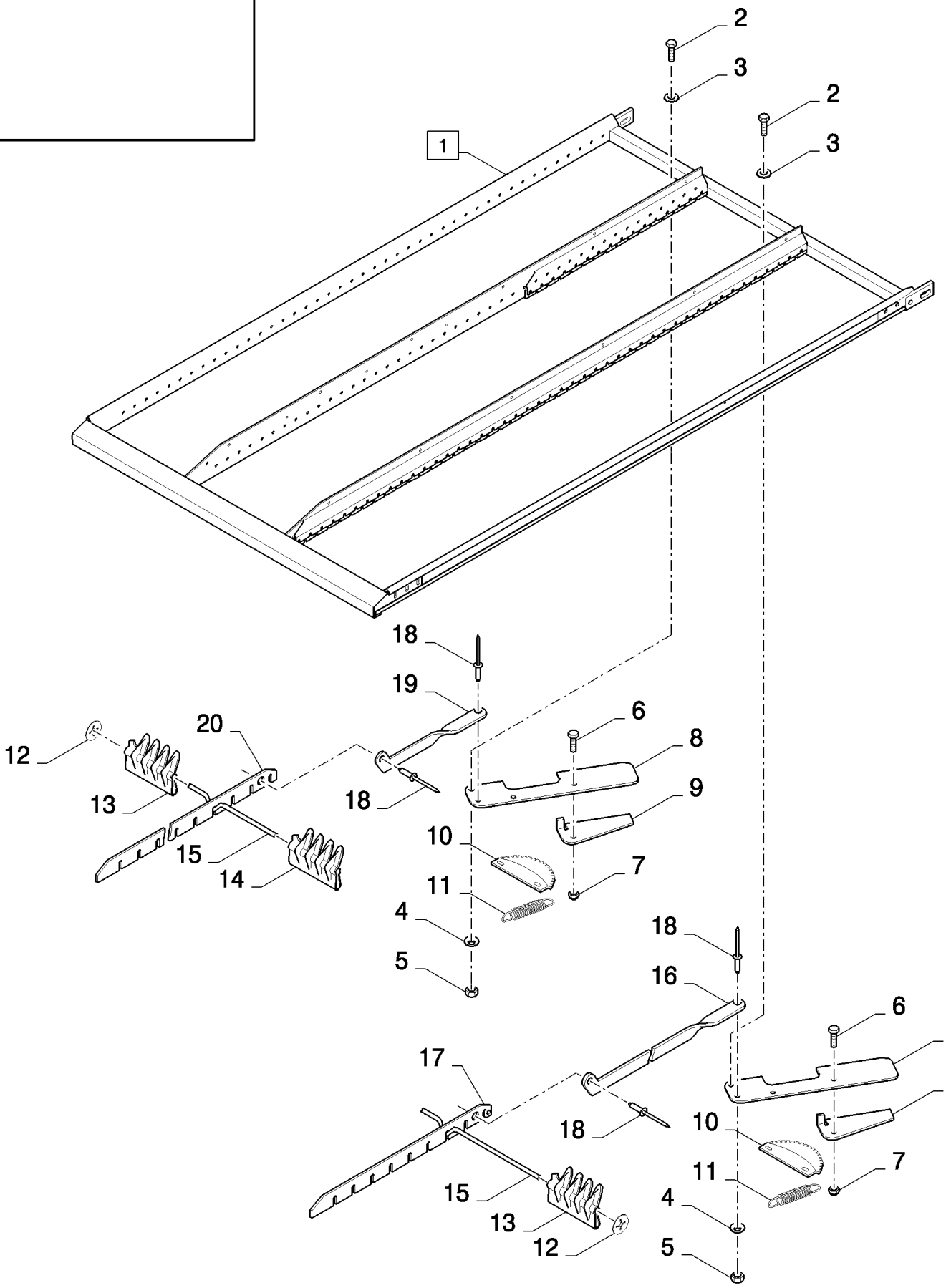

CS660 COMBINE BASE UNIT (1/03-) - Cleaning

15.232(01) UPPER SIEVES - HC 1 1/8"

ссылка	Номер детали	Кол-во	Описание
1	84442412	1	SIEVE, (2 to 20), FOR CS520, CS540 ONLY, FOR CL560 ONLY
1	84442418	2	SIEVE, (2 to 20), FOR CS640, CS660 ONLY
2	80412236	2	SCREW, M8x20, FOR CS520, CS540 ONLY, FOR CL560 ONLY
2	80412117	2	SCREW, M8x20, FOR CS640, CS660 ONLY
3	331171	2	WASHER, {PP:80331171} 8MM
4	300367	2	WASHER, {PP:80300367} 8MM
5	86629542	2	NUT, LOCK, M8 x 1.25, Cl 8,
6	86508568	2	BOLT, Hex, M6 x 16, 8.8,
7	353308	2	NUT, LOCK, M6 x 1, Cl 8,
8	9817781	2	HANDLE, {PP:89817781}
9	432187	2	HANDLE, {PP:80432187}
10	426565	2	QUADRANT, {PP:80426565}
11	449942	2	SPRING, {PP:80449942}
12	398561	6	CLIP, {PP:80398561}
13	324715	225	BAR, {PP:80324715} , FOR CS520, CS540 ONLY, FOR CL560 ONLY
13	324715	119	BAR, {PP:80324715} , FOR CS640, CS660 ONLY
14	84068920	16	PLATE, COVER, , FOR CS640, CS660 ONLY
15	80394836	45	PROP, , FOR CS520, CS540 ONLY, FOR CL560 ONLY
15	80388354	45	, FOR CS640, CS660 ONLY
16	84442044	1	PLATE,
17	84442042	1	PLATE,
18	NS	4	NOT SERVICED, Rivet
19	84442045	1	PLATE, , FOR CS520, CS540 ONLY, FOR CL560 ONLY
19	84097908	1	PLATE, , FOR CS640, CS660 ONLY
20	84442043	1	PLATE, , FOR CS520, CS540 ONLY, FOR CL560 ONLY
20	84442072	1	PLATE, , FOR CS640, CS660 ONLY

15.233(01) SIEVES - HC 1 5/8"

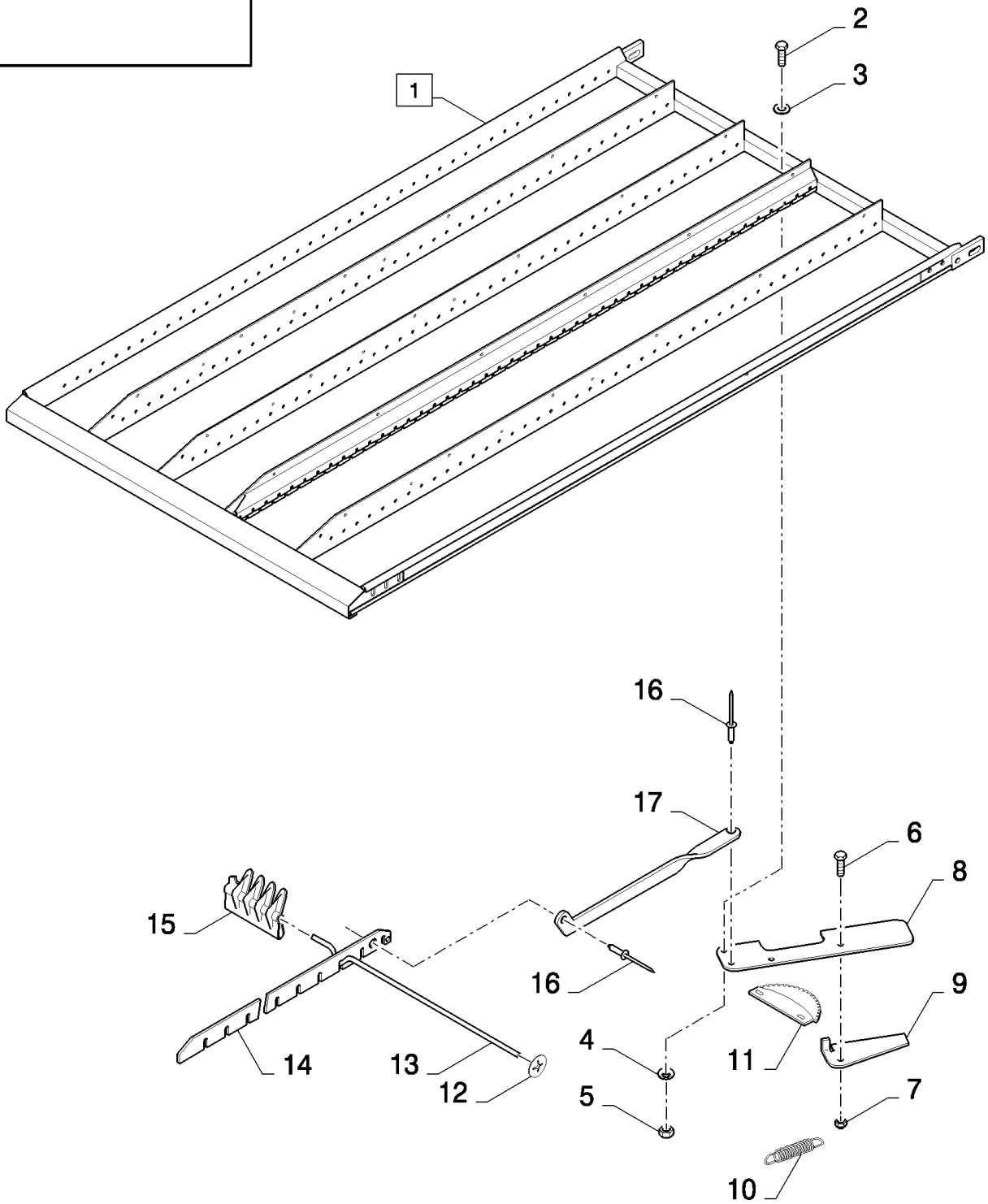

CS660 COMBINE BASE UNIT (1/03-) - Cleaning

15.233(01) SIEVES - HC 1 5/8"

ссылка	Номер детали	Кол-во	Описание
1	84098300	1	SIEVE, (2 to 17), FOR CS520, CS540 ONLY, FOR CL560 ONLY
1	84097915	2	SIEVE, (2 to 17), FOR CS640, CS660 ONLY
2	80412117	1	SCREW, M8x20
3	331171	1	WASHER, {PP:80331171} 8MM
4	300367	1	WASHER, {PP:80300367} 8MM
5	86629542	1	NUT, LOCK, M8 x 1.25, Cl 8,
6	86508568	1	BOLT, Hex, M6 x 16, 8.8,
7	353308	1	NUT, LOCK, M6 x 1, Cl 8,
8	9817781	1	HANDLE, {PP:89817781}
9	432187	1	HANDLE, {PP:80432187}
10	449942	1	SPRING, {PP:80449942}
11	426565	1	QUADRANT, {PP:80426565}
12	398561	6	CLIP, {PP:80398561}
13	80394836	31	PROP, , FOR CS520, CS540 ONLY, FOR CL560 ONLY
13	80388354	31	, FOR CS640, CS660 ONLY
14	84097922	1	PLATE,
15	80396505	155	BAR, , FOR CS520, CS540 ONLY, FOR CL560 ONLY
15	80396505	93	BAR, , FOR CS640, CS660 ONLY
16	NS	2	NOT SERVICED, Rivet
17	84097908	1	PLATE,

15.234(01) LOWER SIEVE CL 1 1/8"

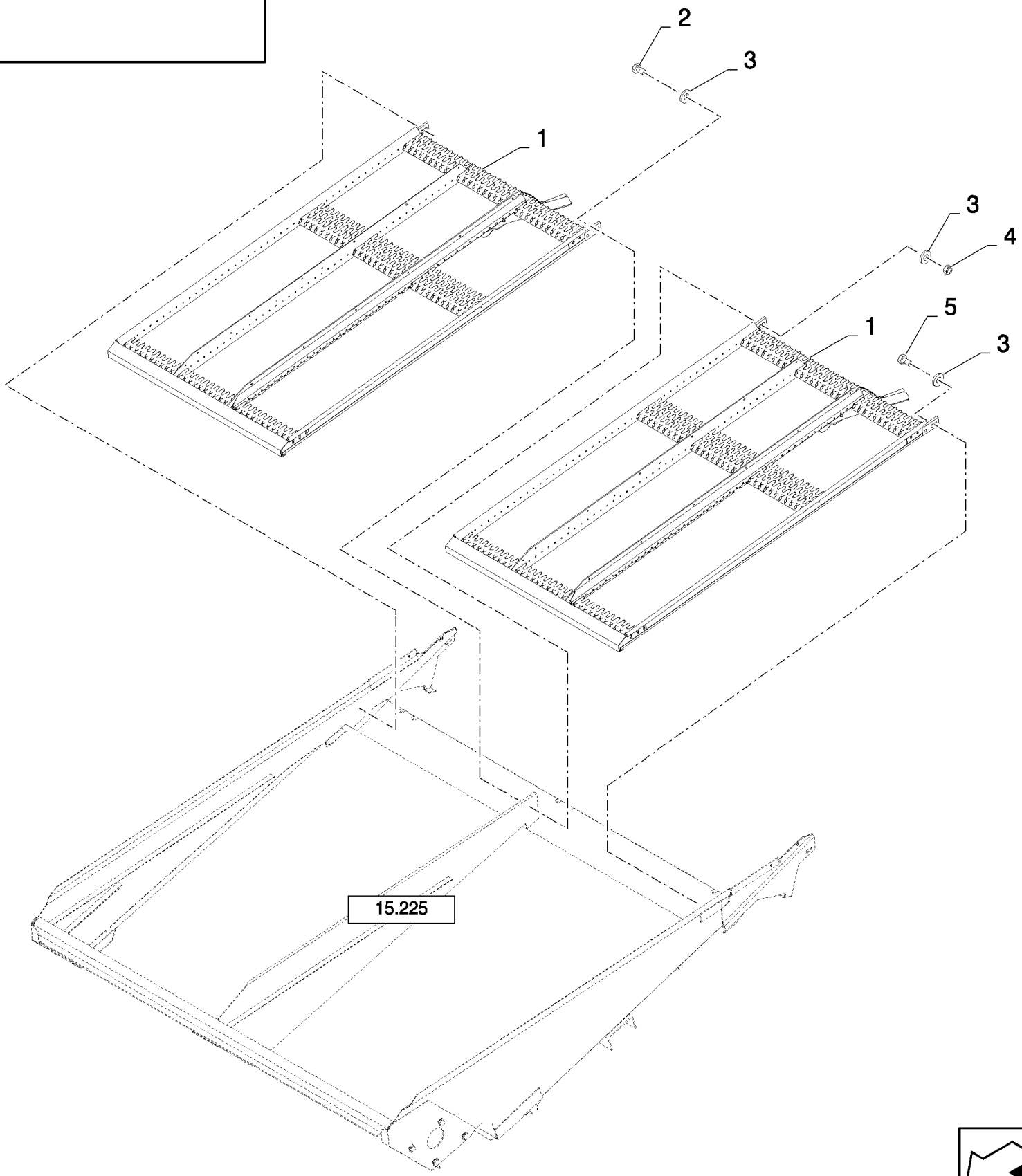

CS660 COMBINE BASE UNIT (1/03-) - Cleaning

15.234(01) LOWER SIEVE CL 1 1/8"

ссылка	Номер детали	Кол-во	Описание
1	84097928	1	SIEVE, , FOR CS520, CS540 ONLY
1	84097906	2	SIEVE, , FOR CS640, CS660 ONLY
2	120112	1	BOLT, Hex, M10 x 40, 8.8, Full Thd, , FOR CS640, CS660 ONLY
3	140045	AR	WASHER, SPRING, Belleville, M10,
4	100016	1	NUT, M10, Cl 8, , FOR CS640, CS660 ONLY
5	43138	2	BOLT, Hex, M10 x 20, 8.8, Full Thd,

15.235(01) GRASS SEED EQUIPMENT

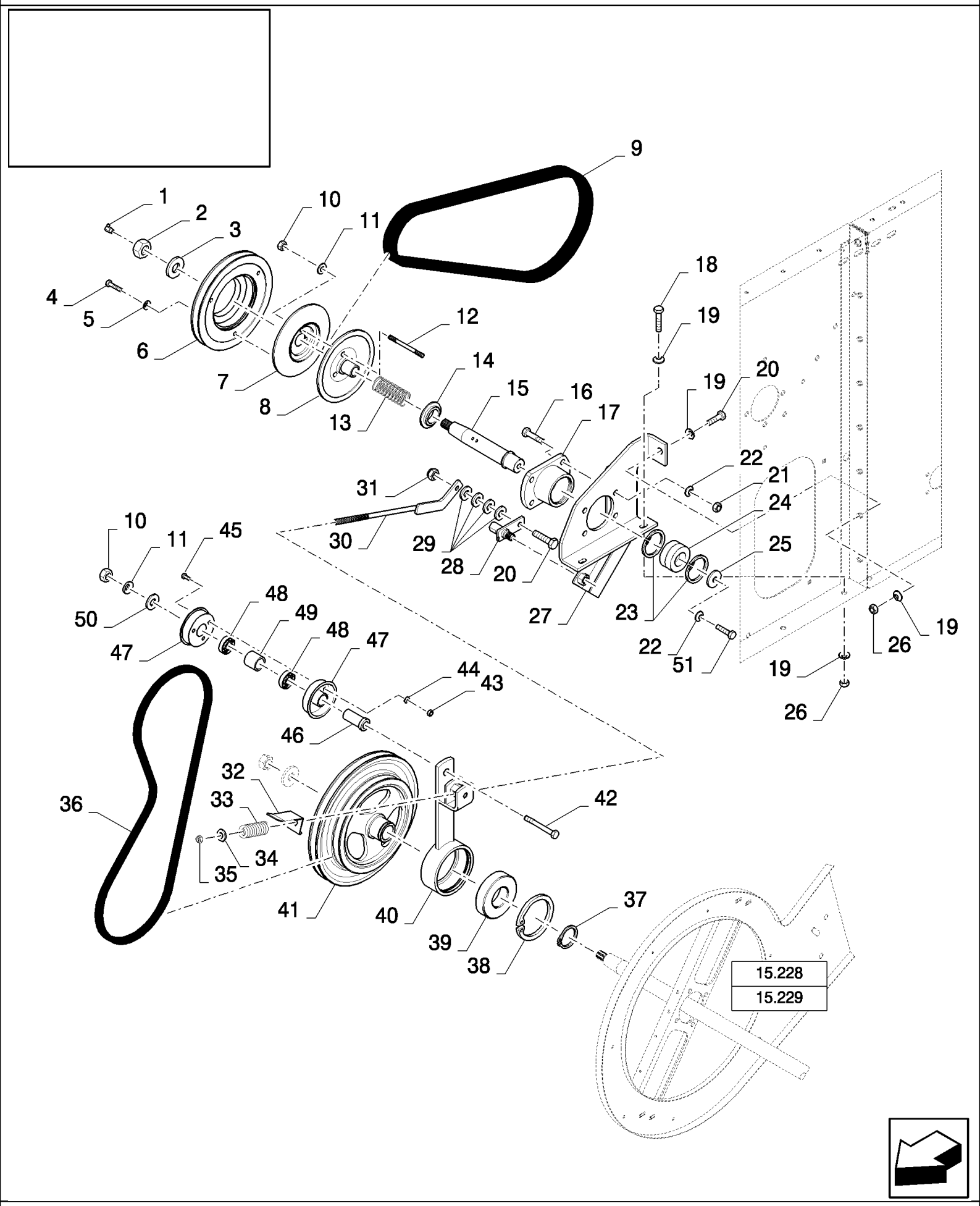

CS660 COMBINE BASE UNIT (1/03-) - Cleaning

15.235(01) GRASS SEED EQUIPMENT

ссылка	Номер детали	Кол-во	Описание
1	323713	1	NIPPLE, LUBE, {PP:80323713}
2	100085	1	NUT, M20 x 1.5, Cl 8,
3	86592703	1	WASHER, M20 x 50 x 6, HT,
4	43127	3	BOLT, Hex, M8 x 25, 8.8,
5	322358	3	WASHER, SPRING, Belleville, M8,
6	84452186	1	PULLEY,
7	84452219	1	HALF-PULLEY,
8	84334072	1	PULLEY,
9	84452153	1	BELT,
10	100020	4	NUT, M16, Cl 8,
11	140048	4	WASHER, SPRING, Belleville, M16,
12	110055	3	STUD, {PP:80110055}
13	334054	1	SPRING, {PP:80334054}
14	84452294	1	RING,
15	84452136	1	SPINDLE,
16	300389	4	BOLT, Hex, M12 x 35, 8.8, Full Thd,
17	84452245	1	HOUSING, BEARING,
18	120112	2	BOLT, Hex, M10 x 40, 8.8, Full Thd,
19	140045	6	WASHER, SPRING, Belleville, M10,
20	9706704	2	BOLT, Hex, M10 x 35, 8.8, Full Thd,
21	9706685	4	NUT, M12, Cl 8,
22	140046	5	WASHER, SPRING, Belleville, M12,
23	80300649	2	
24	84452155	1	BEARING ASSY,
25	80395606	1	WASHER,
26	100016	3	NUT, M10, Cl 8,
27	84452384	1	SUPPORT,
28	84431514	1	HINGE,
29	378244	AR	WASHER, M10,
30	84452387	1	TIE-ROD,
31	100037	1	NUT, M10 x 1.5, Cl 8,
32	84452396	1	INDICATOR,
33	440651	1	SPRING, {PP:80440651}
34	378245	1	WASHER, M12,
35	412126	1	NUT, LOCK, M12 x 1.75, Cl 8,
36	84452112	1	BELT,
37	80370008	1	RING, SNAP,
38	301652	1	RING, SNAP, {PP:80301652} M110, Int,
39	388069	1	BEARING ASSY, {PP:80388069}
40	84452357	1	LEVER, IDLER,
41	84452194	1	PULLEY,
42	374889	1	BOLT, Hex, M16 x 100, 8.8,
43	15896221	3	NUT, M6, Cl 10,
44	322357	3	WASHER, SPRING, Belleville, M6,
45	86508568	3	BOLT, Hex, M6 x 16, 8.8,

15.235(01) GRASS SEED EQUIPMENT

ссылка	Номер детали	Кол-во	Описание
46	427248	1	BUSHING, {PP:80427248}
47	84441735	2	HALF-PULLEY,
48	443898	2	BEARING, BALL, {PP:80443898}
49	430235	1	BUSHING, {PP:80430235}
50	140093	1	WASHER, {PP:80140093}
51	300388	1	BOLT, Hex, M12 x 25, 8.8,

15.236(01) GRAIN PAN, NON REMOVABLE

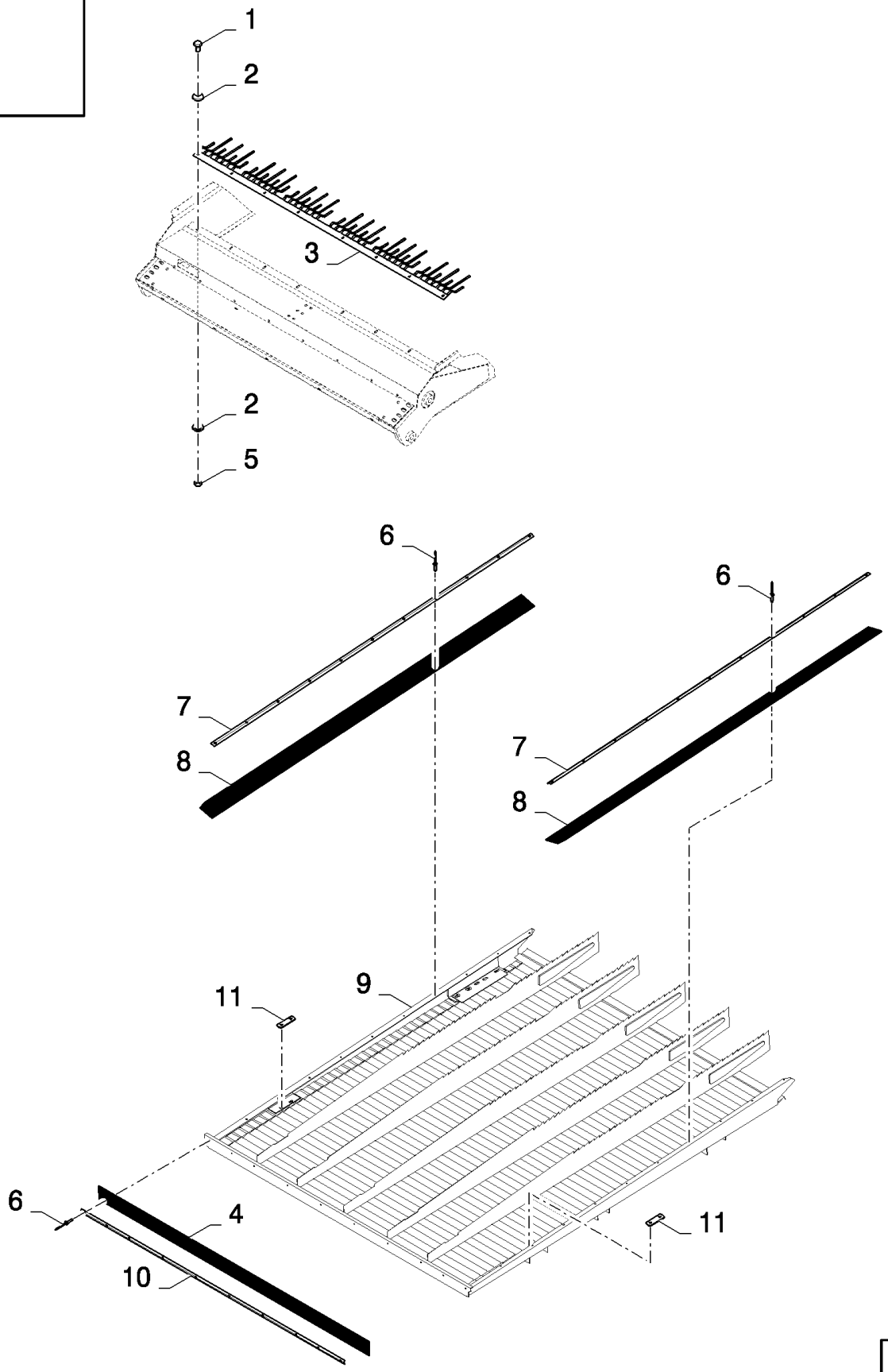

CS660 COMBINE BASE UNIT (1/03-) - Cleaning

15.236(01) GRAIN PAN, NON REMOVABLE

ссылка	Номер детали	Кол-во	Описание
1	86508568	AR	BOLT, Hex, M6 x 16, 8.8,
2	322357	AR	WASHER, SPRING, Belleville, M6,
3	84452950	1	RAKE, , FOR CS520, CS540, CL560 ONLY
3	84446434	1	RAKE, , FOR CS640, CS660 ONLY
4	84431030	1	CANVAS, , FOR CS520, CS540, CL560 ONLY
4	84072359	1	CANVAS, , FOR CS640, CS660 ONLY
5	89706755	AR	NUT, M6
6	445395	AR	RIVET, Pop, M4.8 x 18.1,
7	84461322	2	PLATE, FIXING,
8	84461049	2	CANVAS,
9	84461624	1	DEFLECTOR, , FOR CS520, CS540, CL560 ONLY
9	84461623	1	DEFLECTOR, , FOR CS640, CS660 ONLY
10	84431049	1	PLATE, FIXING, , FOR CS520, CS540, CL560 ONLY
10	84072727	1	PLATE, FIXING, , FOR CS640, CS660 ONLY
11	333541	2	PLATE, ADJUSTING,

UNLOADING	**VIDANGE**	**DESCARGA**	**TØMME**
SCARICO	**ENTLEERUNG**	**DESCARGA**	**ONTLADING**

SEC. 16

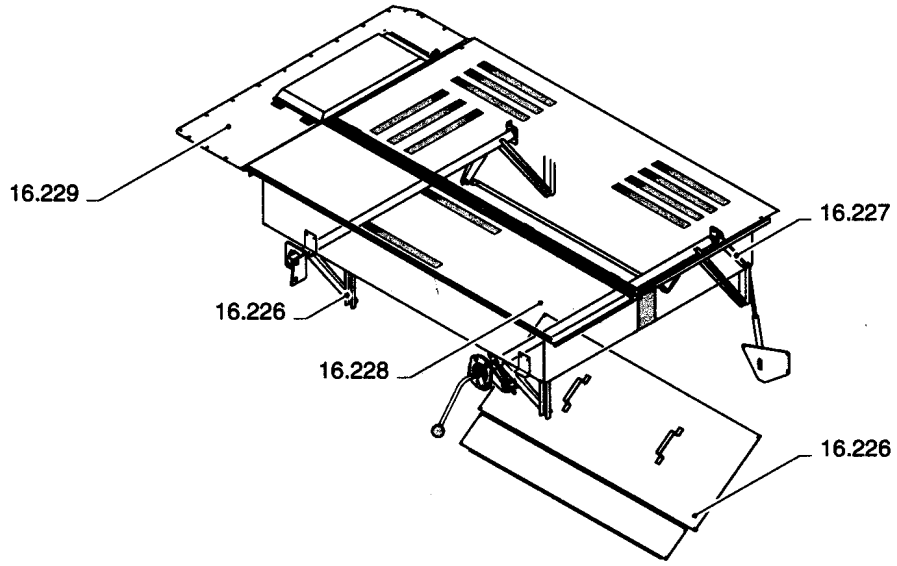

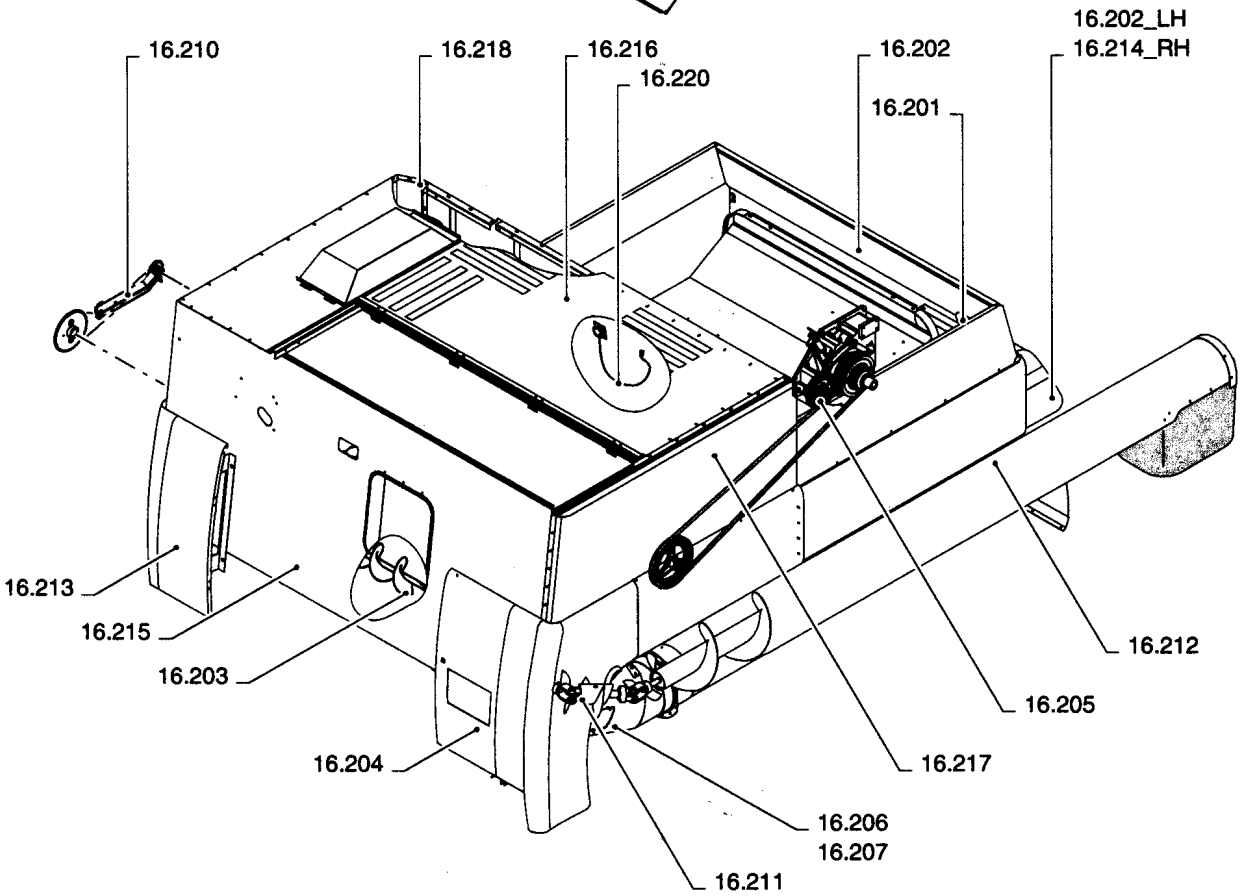

ссылка	Номер детали	Кол-во	Описание

UNLOADING	**VIDANGE**	**DESCARGA**	**TØMME**
SCARICO	**ENTLEERUNG**	**DESCARGA**	**ONTLADING**

SEC. 16

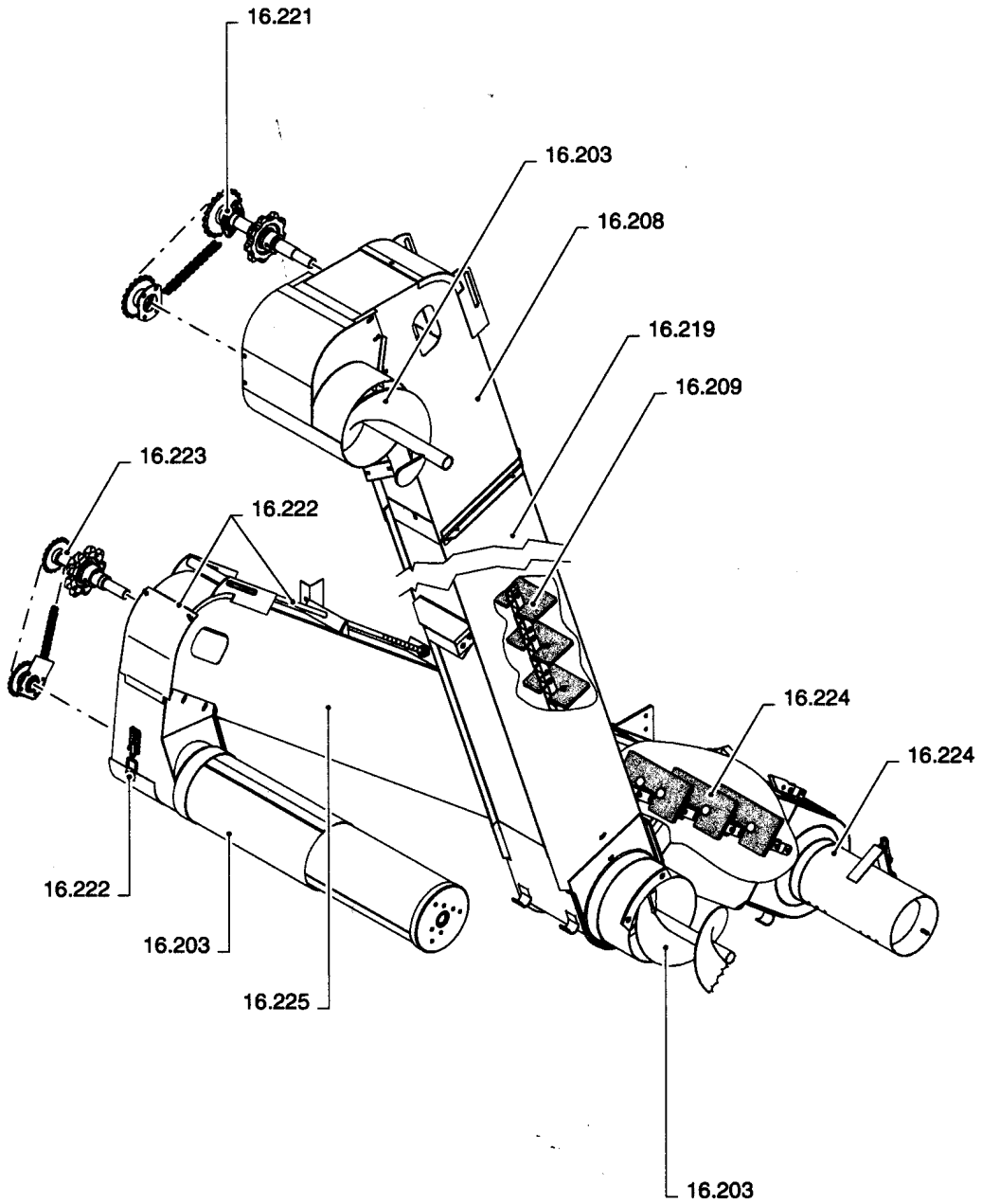

ссылка	Номер детали	Кол-во	Описание

16.201(01) GRAINTANK - SHIELDS, REAR

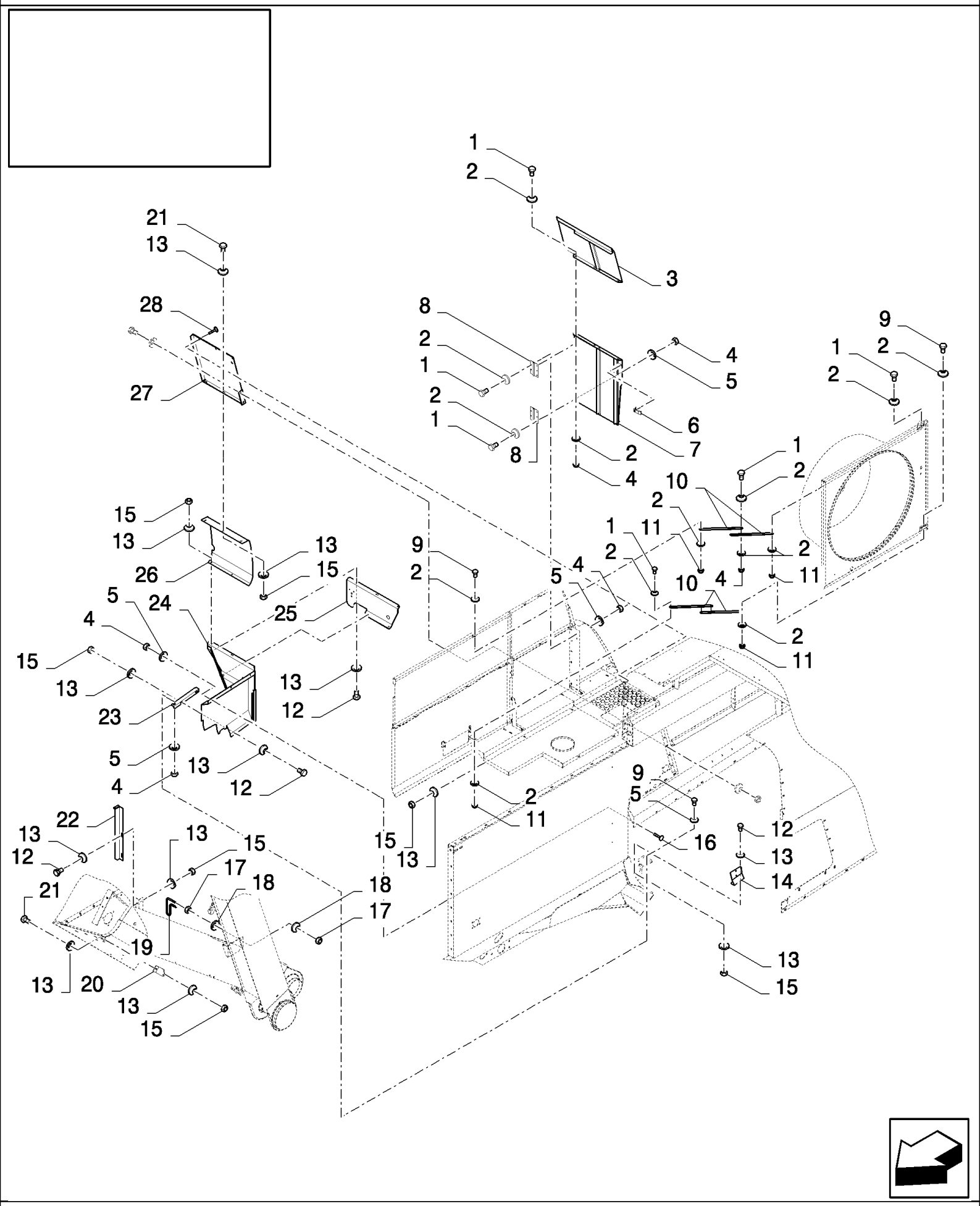

16.201(01) GRAINTANK - SHIELDS, REAR

ссылка	Номер детали	Кол-во	Описание
1	86508568	18	BOLT, Hex, M6 x 16, 8.8,
2	412649	32	WASHER, SPRING, Belleville, M6,
3	84435946	1	DOOR, , FOR CS520, CS540 ONLY, BSN C363
3	84435933	1	DOOR, , FOR CS640, CS660 ONLY, BSN C363
4	15896221	20	NUT, M6, Cl 10,
5	322357	13	WASHER, SPRING, Belleville, M6,
6	89577003	1	LOCK, , BSN C415
7	84435947	1	DOOR, , FOR CS520, CS540 ONLY, BSN C363
7	84452462	1	DOOR, , FOR CS520, CS540 ONLY, FOR CL560 ONLY, BSN F364415
7	84435934	1	DOOR, , FOR CS640, CS660 ONLY, BSN C363
7	84453202	1	DOOR, , FOR CS640, CS660 ONLY, BSN F364415
8	84071391	2	HINGE, , BSN C415
9	86977786	3	BOLT, Hex, M6 x 25, 8.8,
9	86977786	3	BOLT, Hex, M6 x 25, 8.8,
10	84443747	4	SUPPORT, M6x25, FOR CS520, CS540 ONLY, FOR CL560 ONLY
10	84443635	4	SUPPORT, , FOR CS640, CS660 ONLY
11	353308	4	NUT, LOCK, M6 x 1, Cl 8,
12	43127	AR	BOLT, Hex, M8 x 25, 8.8,
13	412650	AR	WASHER, SPRING, Belleville, M8,
14	84440592	1	PLATE, , BSN C301
15	89706690	AR	NUT, M8, Cl 8,
16	9706703	3	BOLT, CARRIAGE, Short NK, M6 x 20, Cl8.8, Full Thd,
17	100016	4	NUT, M10, Cl 8,
18	140045	4	WASHER, SPRING, Belleville, M10,
19	84434122	1	SUPPORT, , FOR CS520, CS540 ONLY, FOR CL560 ONLY
19	84434123	1	SUPPORT, , FOR CS640, CS660 ONLY
20	84989098	1	BRACKET,
21	120104	4	BOLT, Hex, M8 x 20, 8.8,
22	84434169	1	SUPPORT, , FOR CS520, CS540 ONLY, FOR CL560 ONLY
22	84434311	1	SUPPORT, , FOR CS640, CS660 ONLY
23	84437442	1	REINFORCEMENT, , BSN C301
24	84447356	1	SHIELD, , FOR CS520, CS540 ONLY, FOR CL560 ONLY
24	84447358	1	SHIELD, , FOR CS640, CS660 ONLY
25	84447300	1	PLATE,
26	84434000	1	SHIELD, , FOR CS520, CS540 ONLY, FOR CL560 ONLY
26	84434241	1	SHIELD, , FOR CS640, CS660 ONLY
27	84433999	1	SHIELD, , FOR CS520, CS540 ONLY, BSN C407
27	84457886	1	PLATE, , FOR CS520, CS540 ONLY, FOR CL560 ONLY, ASN D408
27	84434238	1	SHIELD, , FOR CS640, CS660 ONLY, BSN C407
27	84457887	1	SHIELD, , FOR CS640, CS660 ONLY, ASN D408
28	86507486	3	BOLT, CARRIAGE, Short NK, M8 x 20, Cl8.8, Full Thd,

16.202(01) GRAINTANK - SHIELDS, REAR

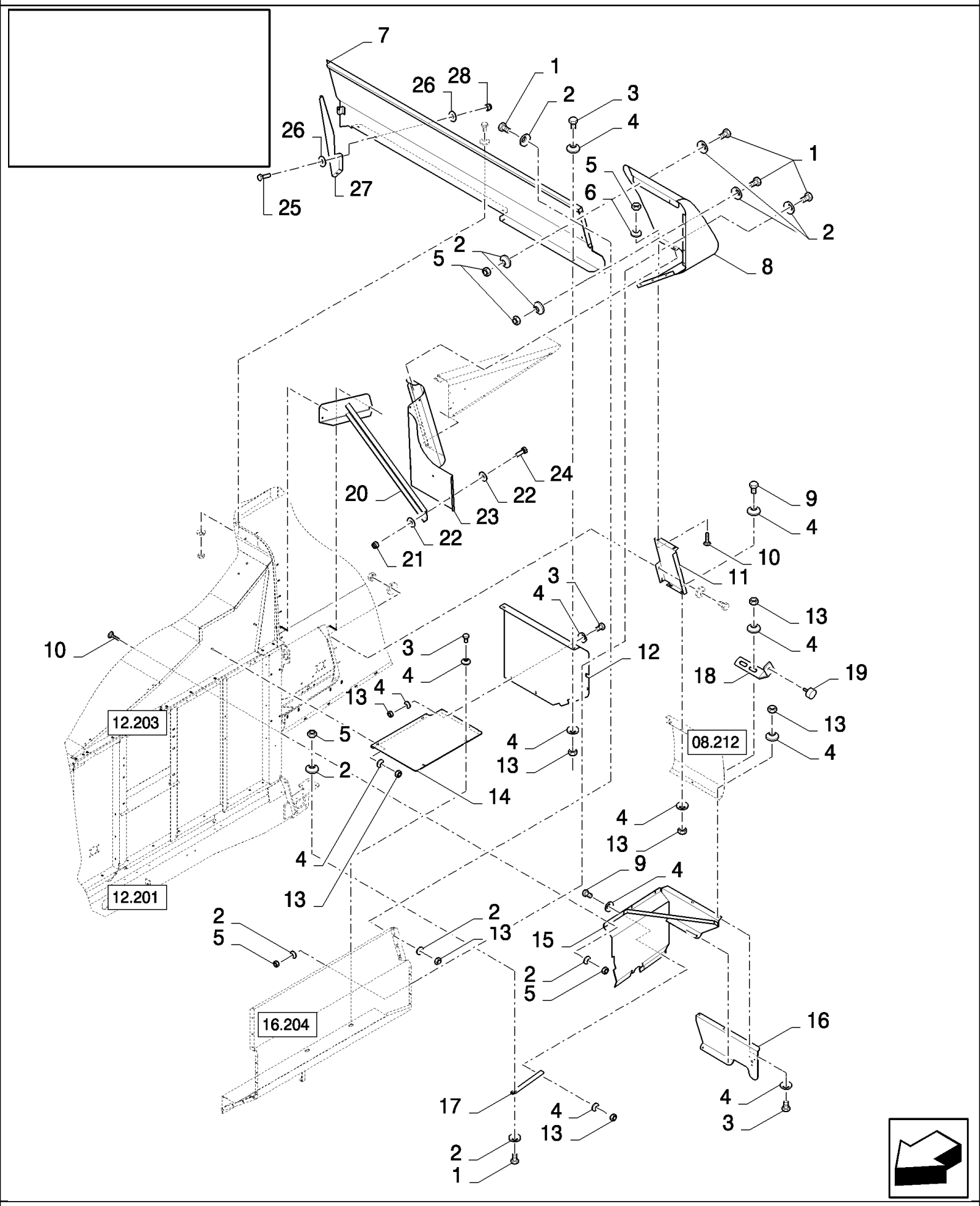

16.202(01) GRAINTANK - SHIELDS, REAR

ссылка	Номер детали	Кол-во	Описание
1	86977786	13	BOLT, Hex, M6 x 25, 8.8,
1	86977786	13	BOLT, Hex, M6 x 25, 8.8,
2	412649	29	WASHER, SPRING, Belleville, M6,
3	43127	9	BOLT, Hex, M8 x 25, 8.8,
4	412650	26	WASHER, SPRING, Belleville, M8,
5	15896221	15	NUT, M6, Cl 10,
6	322357	2	WASHER, SPRING, Belleville, M6,
7	84434202	1	SHIELD, , FOR CS520, CS540 ONLY, BSN C367
7	84440579	1	PLATE, , FOR CS520, CS540 ONLY, FOR CL560 ONLY, ASN D368
7	84434282	1	SHIELD, , FOR CS640, CS660 ONLY, BSN C367
7	84440578	1	PLATE, , FOR CS640, CS660 ONLY, ASN D368
8	84434193	1	SHIELD, , FOR CS520, CS540 ONLY, BSN C319
8	84446997	1	SHIELD, , FOR CS520, CS540 ONLY, FOR CL560 ONLY, ASN D320
8	84434247	1	SHIELD, , FOR CS640, CS660 ONLY, BSN C319
8	84446964	1	SHIELD, , FOR CS640, CS660 ONLY, ASN D320
9	120104	4	BOLT, Hex, M8 x 20, 8.8,
10	9706703	5	BOLT, CARRIAGE, Short NK, M6 x 20, Cl8.8, Full Thd,
11	84434005	1	PLATE, , FOR CS520, CS540 ONLY, BSN C301
11	84434261	1	PLATE, , FOR CS640, CS660 ONLY, BSN C301
12	84437461	1	PLATE, , FOR CS520, CS540 ONLY, BSN C319
12	84446954	1	PLATE, , FOR CS520, CS540 ONLY, FOR CL560 ONLY, ASN D320
12	84437450	1	PLATE, , FOR CS640, CS660 ONLY, BSN C319
12	84446616	1	PLATE, , FOR CS640, CS660 ONLY, ASN D320
13	89706690	16	NUT, M8, Cl 8,
14	84437460	1	PLATE, , FOR CS520, CS540 ONLY, BSN C319
14	84446944	1	PLATE, , FOR CS520, CS540 ONLY, FOR CL560 ONLY, ASN D320
14	84437454	1	PLATE, , FOR CS640, CS660 ONLY, BSN C319
14	84446623	1	PLATE, , FOR CS640, CS660 ONLY, ASN D320
15	84447334	1	SHIELD,
16	84447282	1	PLATE,
17	84444034	1	SUPPORT,
18	84448844	2	SHIELD,
19	916454	2	DAMPER, {PP:80916454}
20	84430227	1	SUPPORT, , FOR CL560 ONLY
21	84430112	3	NUT, M6, FOR CL560 ONLY
22	84430104	6	WASHER, 6MM, FOR CL560 ONLY
23	84430228	1	PLATE, , FOR CL560 ONLY
24	84430106	3	SCREW, M6x20, FOR CL560 ONLY
25	84430161	3	SCREW, M8x25
26	84430060	3	WASHER, 8MM
27	84430226	3	SUPPORT,
28	84430190	3	NUT, M8

16.203(01) AUGERS FOR GRAIN AND TAILINGS ELEVATORS

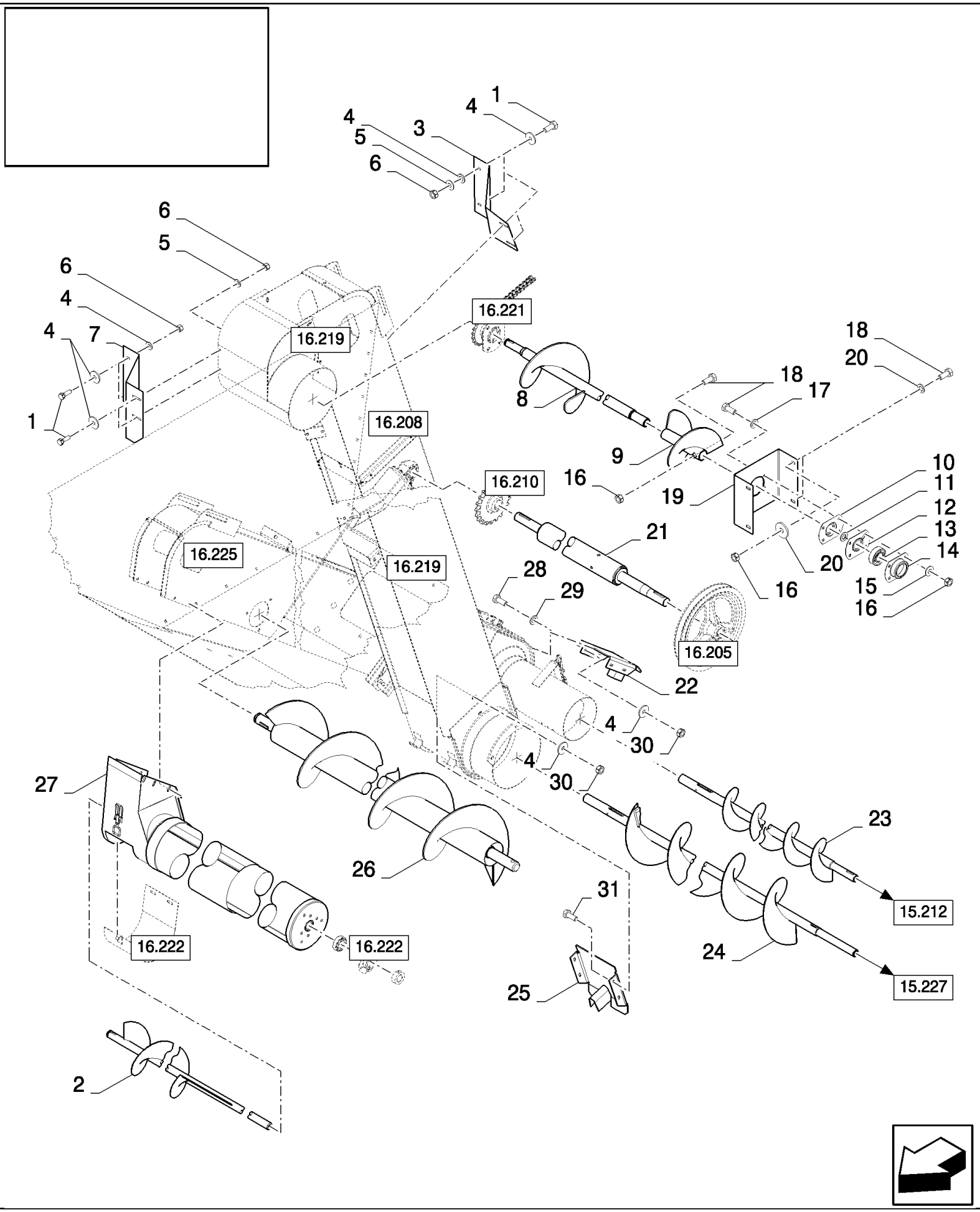

16.203(01) AUGERS FOR GRAIN AND TAILINGS ELEVATORS

ссылка	Номер детали	Кол-во	Описание
1	120100	8	BOLT, Hex, M6 x 20, 8.8,
2	84981177	1	AUGER, , FOR CL560 ONLY, FOR CS520, CS540 ONLY, STANDARD
2	84982322	1	AUGER, , FOR CS520, CS540 ONLY, REINFORCED
2	84981168	1	AUGER, , FOR CS640, CS660 ONLY, STANDARD
2	84982323	1	AUGER, , FOR CS640, CS660 ONLY, REINFORCED
3	84980873	1	SUPPORT, , FOR CL560 ONLY, FOR CS520, CS540 ONLY
3	84980408	1	SUPPORT, , FOR CS640, CS660 ONLY
4	412649	14	WASHER, SPRING, Belleville, M6,
5	322357	2	WASHER, SPRING, Belleville, M6,
6	353308	8	NUT, LOCK, M6 x 1, Cl 8,
7	84980865	1	PLATE, , FOR CS520, CS540 ONLY, FOR CL560 ONLY
7	84980407	1	PLATE, , FOR CS640, CS660 ONLY
8	84982016	1	AUGER, , FOR CS520, CS540 ONLY, FOR CL560 ONLY, STANDARD
8	84981426	1	AUGER, , REINFORCED, FOR CS520, CS540 ONLY
8	84981988	1	AUGER, , FOR CS640, CS660 ONLY, STANDARD, BSN C363
8	84981147	1	AUGER, , FOR CS640, CS660 ONLY, REINFORCED, BSN C363
8	84981988	1	AUGER, , STANDARD, FOR CS640 ONLY, ASN D364
8	84981147	1	AUGER, , FOR CS640 ONLY, REINFORCED, ASN D364
8	84983012	1	AUGER, , STANDARD, FOR CS660 ONLY, ASN D364
8	84983014	1	AUGER, , FOR CS660 ONLY, REINFORCED, ASN D364
9	84992855	2	AUGER, , STANDARD
9	84981148	2	AUGER, , REINFORCED
10	84814926	1	COVER,
11	220061	1	SEAL, FELT, {PP:80220061}
12	84814927	1	COVER,
13	84980391	1	BEARING ASSY,
14	84435386	1	HOUSING, BEARING,
15	322358	4	WASHER, SPRING, {PP:80322358} Belleville, M8,
16	89706690	8	NUT, M8, Cl 8,
17	140016	4	WASHER, M8 x 16 x 1.6,
18	120104	8	BOLT, Hex, M8 x 20, 8.8,
19	84980660	1	SUPPORT,
20	412650	8	WASHER, SPRING, Belleville, M8,
21	84980665	1	SHAFT, , FOR CL560 ONLY, FOR CS520, CS540 ONLY
21	84980358	1	SHAFT, , FOR CS640, CS660 ONLY
22	84980989	1	EXTENSION, , STANDARD
22	84981153	1	EXTENSION, , REINFORCED
23	84980876	1	AUGER, , FOR CL560 ONLY, FOR CS520, CS540 ONLY, STANDARD
23	84981389	1	AUGER, , FOR CS520, CS540 ONLY, REINFORCED
23	84980646	1	AUGER, , FOR CS640, CS660 ONLY, STANDARD
23	84981144	1	AUGER, , FOR CS640, CS660 ONLY, REINFORCED
24	84980879	1	AUGER, , FOR CL560 ONLY, FOR CS520, CS540 ONLY, STANDARD
24	84981427	1	AUGER, , FOR CS520, CS540 ONLY, REINFORCED
24	84980638	1	AUGER, , FOR CS640, CS660 ONLY, STANDARD
24	84981146	1	AUGER, , FOR CS640, CS660 ONLY, REINFORCED

16.203(01) AUGERS FOR GRAIN AND TAILINGS ELEVATORS

ссылка	Номер детали	Кол-во	Описание
25	84980686	1	EXTENSION, , STANDARD
25	84981154	1	EXTENSION, , REINFORCED
26	84981087	1	AUGER, , FOR CL560 ONLY, FOR CS520, CS540 ONLY
26	84980399	1	AUGER, , FOR CS640, CS660 ONLY
27	84980875	1	TUBE, , FOR CS520, CS540 ONLY, FOR CL560 ONLY
27	84980613	1	TUBE, , FOR CS640, CS660 ONLY, BSN C495
27	87368289	1	TUBE, ELEVATOR, , FOR CS640, CS660 ONLY, ASN D496
28	86508568	1	BOLT, Hex, M6 x 16, 8.8, , FOR CS640, CS660 ONLY
29	140040	1	WASHER, M6 x 22 x 2, , FOR CS640, CS660 ONLY
30	15896221	1	NUT, M6, Cl 10,
31	9706703	4	BOLT, CARRIAGE, Short NK, M6 x 20, Cl8.8, Full Thd,

16.204(01) GRAINTANK - SHIELDS, LH

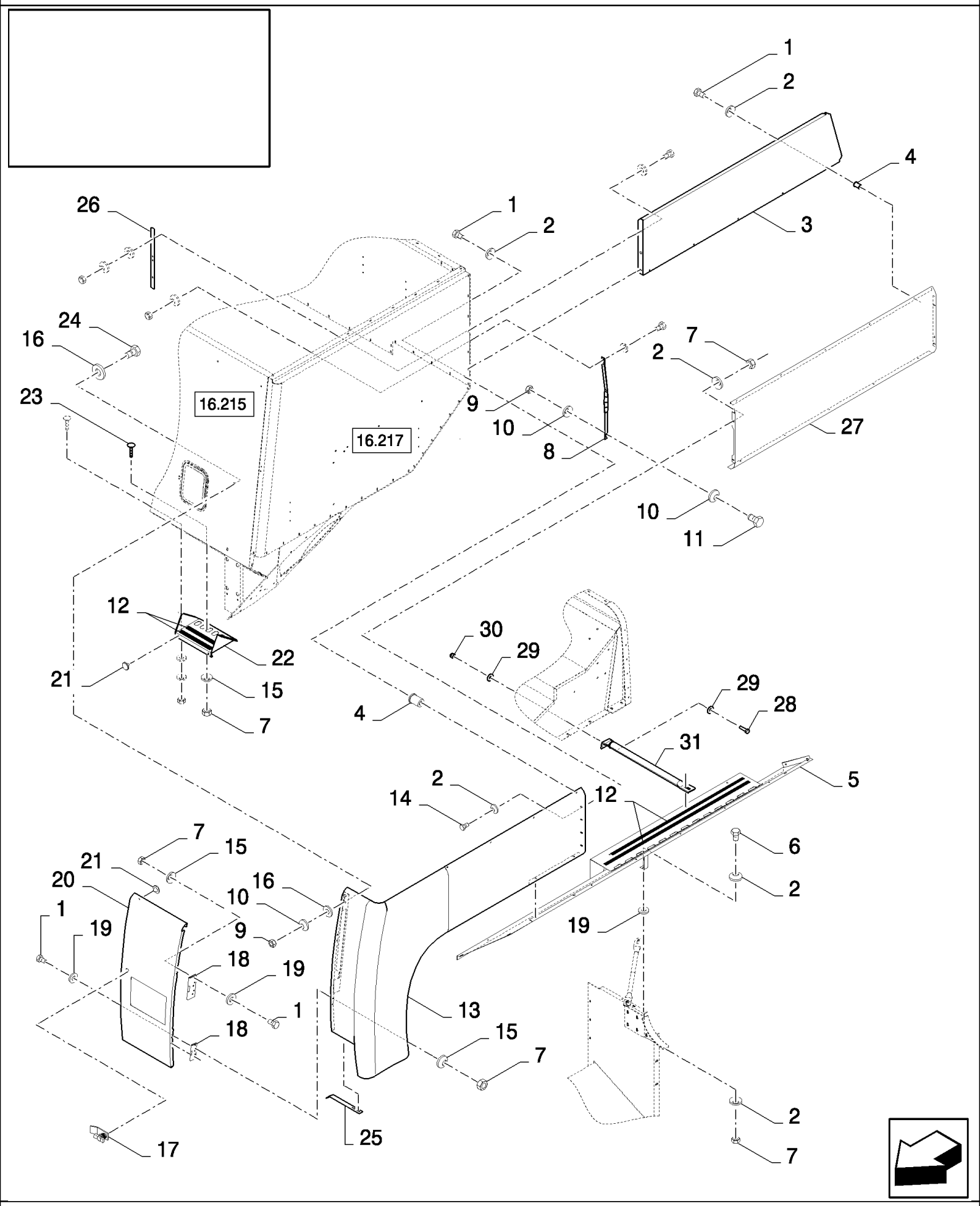

16.204(01) GRAINTANK - SHIELDS, LH

ссылка	Номер детали	Кол-во	Описание
1	120100	17	BOLT, Hex, M6 x 20, 8.8,
2	412649	23	WASHER, SPRING, Belleville, M6,
3	84440543	1	SHIELD, , BSN C363
3	84448655	1	SHIELD, , ASN D364
4	80740622	9	NUT, M6x16
5	84434177	1	SHIELD, , BSN C319
5	84446916	1	SHIELD, , BSN F320407
5	84457889	1	SHIELD, , ASN D408
6	86977786	1	BOLT, Hex, M6 x 25, 8.8,
6	86977786	1	BOLT, Hex, M6 x 25, 8.8,
7	15896221	17	NUT, M6, Cl 10,
8	84434039	1	SUPPORT, , BSN C319
8	84446956	1	SHIELD, , ASN D320
9	89706690	3	NUT, M8, Cl 8,
10	412650	4	WASHER, SPRING, Belleville, M8,
11	43127	1	BOLT, Hex, M8 x 25, 8.8,
12	80401519	4	STRIP, ANTI-SKID, L=4.08M
13	84434127	1	SHIELD, , BSN C319
13	84444482	1	SHIELD, , ASN D320
14	86508568	6	BOLT, Hex, M6 x 16, 8.8,
15	322357	10	WASHER, SPRING, Belleville, M6,
16	86511315	4	WASHER, M8 x 16 x 1.6,
17	89577003	1	LOCK,
18	84071391	2	HINGE,
19	9824259	AR	WASHER, M6 x 12 x 1.6,
20	84443738	1	DOOR,
21	331233	2	PLUG, {PP:80331233}
22	84437563	1	STEP,
23	9706703	2	BOLT, CARRIAGE, Short NK, M6 x 20, Cl8.8, Full Thd,
24	120104	2	BOLT, Hex, M8 x 20, 8.8,
25	84444822	1	REINFORCEMENT,
26	84448817	1	
27	84446956	1	SHIELD,
28	84430201	2	SCREW, M8x30, FOR CL560 ONLY
29	84430060	4	WASHER, 8MM, FOR CL560 ONLY
30	84430190	2	NUT, M8, FOR CL560 ONLY
31	84430202	1	SUPPORT, , FOR CL560 ONLY

16.205(01) UNLOADING AUGER

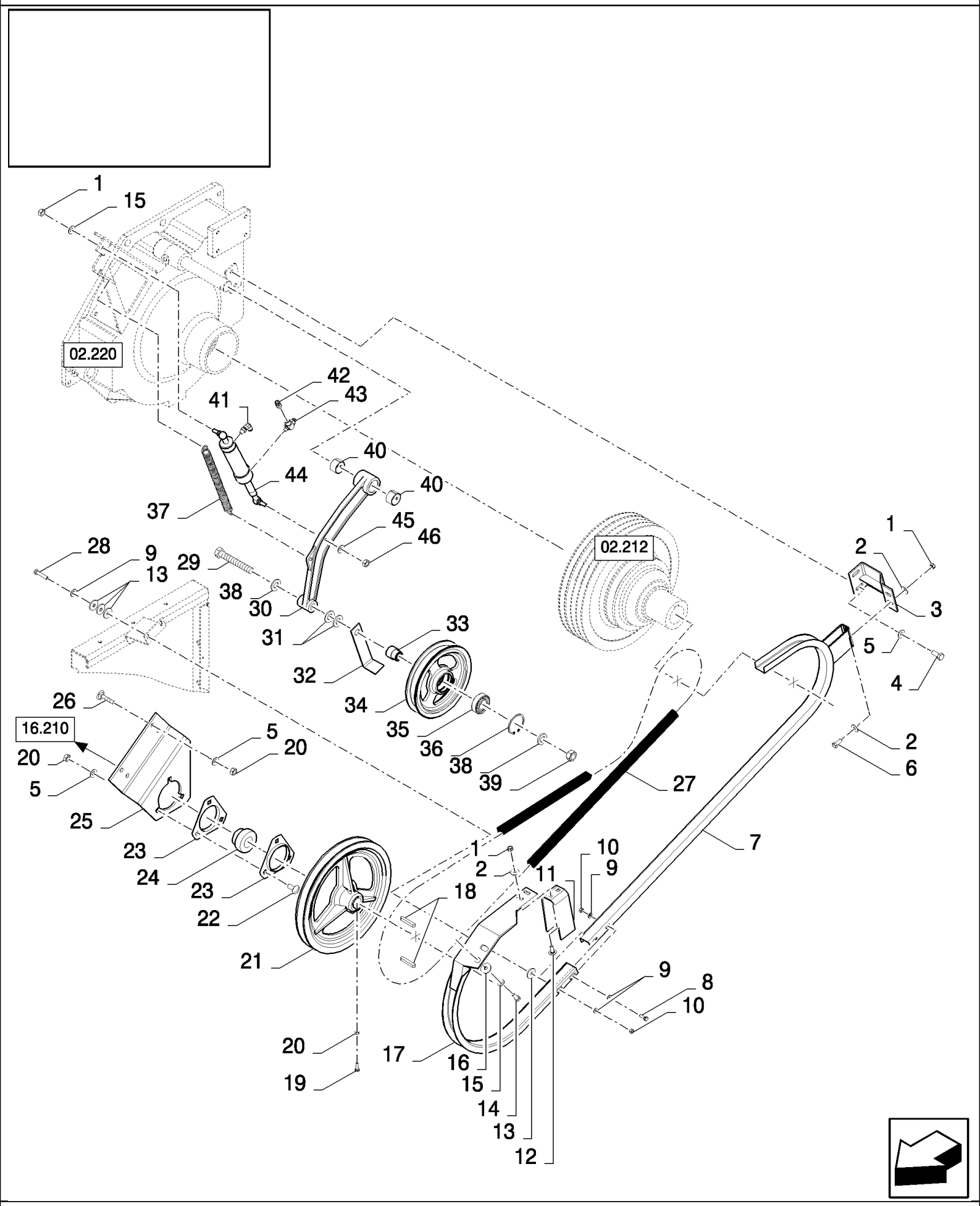

16.205(01) UNLOADING AUGER

ссылка	Номер детали	Кол-во	Описание
1	89706690	5	NUT, M8, Cl 8,
2	412650	6	WASHER, SPRING, Belleville, M8,
3	84980535	1	BRACKET,
4	43139	2	SCREW, {PP:80043139} M10x25
5	140045	9	WASHER, SPRING, Belleville, M10,
6	120104	2	BOLT, Hex, M8 x 20, 8.8,
7	84980401	1	GUIDE,
8	120100	2	BOLT, Hex, M6 x 20, 8.8,
9	322357	8	WASHER, SPRING, Belleville, M6,
10	9706755	4	NUT, M6, Cl 8,
11	84980402	1	BRACKET,
12	86507486	2	BOLT, CARRIAGE, Short NK, M8 x 20, Cl8.8, Full Thd,
13	140040	AR	WASHER, M6 x 22 x 2,
14	43127	2	BOLT, Hex, M8 x 25, 8.8,
15	322358	3	WASHER, SPRING, Belleville, M8,
16	140041	2	WASHER, M8 x 28 x 3,
17	84980400	1	GUIDE,
18	170010	2	KEY, {PP:80170010}
19	43140	1	BOLT, Hex, M10 x 30, 8.8, Full Thd,
20	100016	8	NUT, M10, Cl 8,
21	84980361	1	PULLEY,
22	338949	3	BOLT, CARRIAGE, Short NK, M10 x 25, Cl8.8, Full Thd,
23	578189	2	FLANGE, {PP:80578189} , BSN C319
23	84814939	2	FLANGE, , ASN D320
24	322360	1	BEARING, BALL, {PP:80322360}
25	84980360	1	SUPPORT,
26	86633356	4	BOLT, CARRIAGE, Short NK, M10 x 25, Cl8.8, Full Thd,
27	84991836	1	BELT, TRANSMISSION, , BSN C511
27	84462590	1	BELT, , ASN D512
28	120101	2	BOLT, Hex, M6 x 30, 8.8, Full Thd,
29	374889	1	BOLT, Hex, M16 x 100, 8.8, , BSN C391
29	120093	1	BOLT, Hex, M16 x 80, 8.8, , ASN D392
30	84980521	1	ARM, , BSN C391
30	84454598	1	ARM, , ASN D392
31	140090	AR	WASHER, 17MM
32	80756977	1	GUIDE, , BSN C391
32	84454608	1	GUIDE, , ASN D392
33	200071	1	BUSHING, , BSN C391
33	200072	1	BUSHING, , ASN D392
34	84980523	1	PULLEY,
35	80034439	1	BEARING ASSY,
36	370011	1	RING, SNAP, M52, Int,
37	84444666	1	SPRING,
38	140048	2	WASHER, SPRING, Belleville, M16,
39	100020	1	NUT, M16, Cl 8,

16.205(01) UNLOADING AUGER

ссылка	Номер детали	Кол-во	Описание
40	420434	2	BUSHING,
41	80825500	1	CONNECTOR, HYD.,
42	89576743	1	CONNECTOR, HYD.,
43	89578294	1	CONNECTOR, HYD.,
44	84981258	1	CYLINDER,
45	322358	1	WASHER, SPRING, Belleville, M8, , BSN C391
45	322358	1	WASHER, SPRING, Belleville, M8, , FOR CL560 ONLY, ASN D392
46	89706690	1	NUT, M8, Cl 8, , BSN C391
46	89706690	1	NUT, M8, Cl 8, , FOR CL560 ONLY, ASN D392
46	100097	1	NUT, Thin, M8 x 1.25, Cl 04, , ASN D392

16.206(01) UNLOADING AUGER

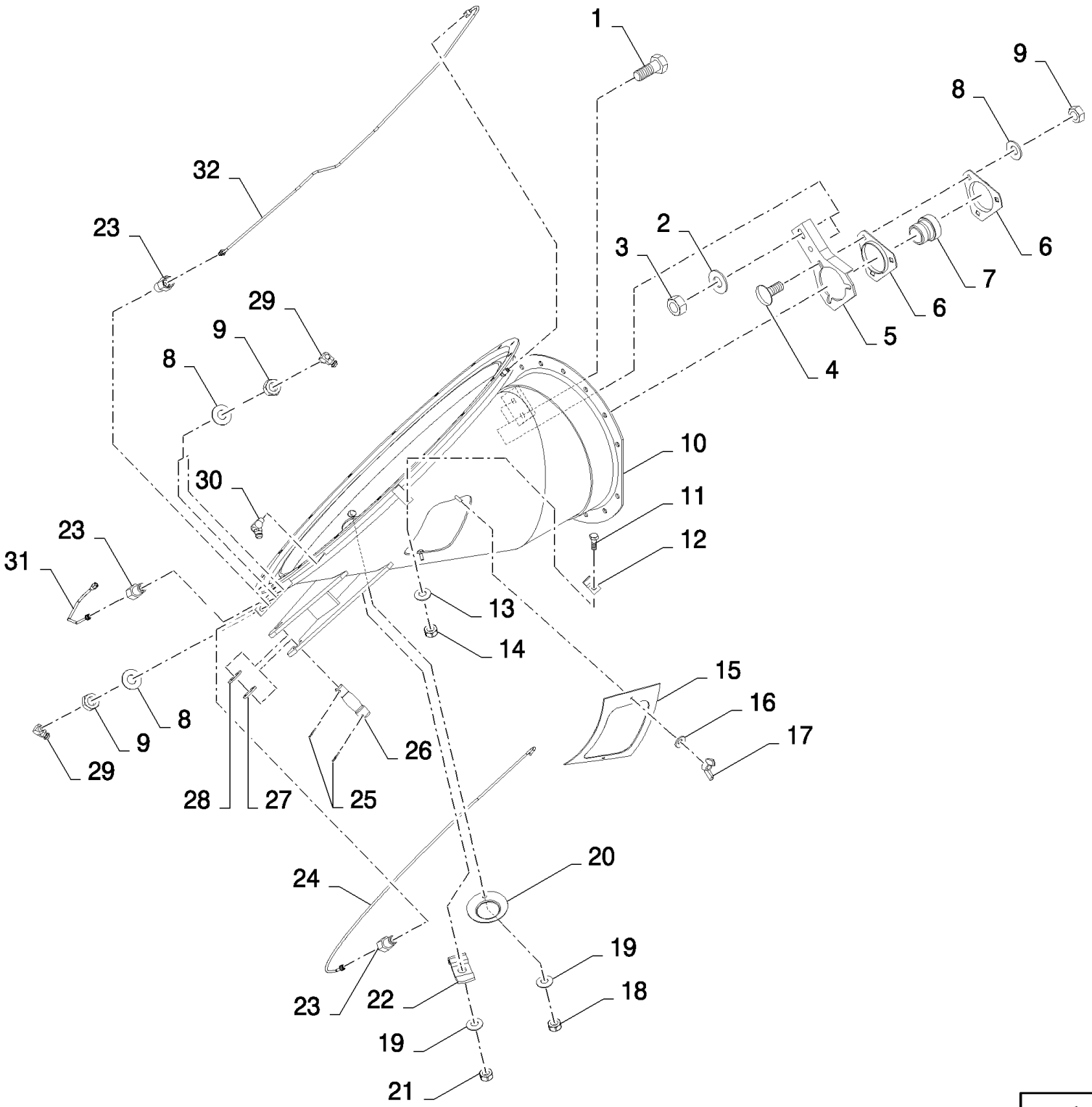

16.206(01) UNLOADING AUGER

ссылка	Номер детали	Кол-во	Описание
1	9706687	2	BOLT, Hex, M12 x 30, 8.8,
2	140046	2	WASHER, SPRING, Belleville, M12,
3	9706685	2	NUT, M12, Cl 8,
4	338949	4	BOLT, CARRIAGE, Short NK, M10 x 25, Cl8.8, Full Thd,
5	84814936	1	PLATE,
6	84814939	2	FLANGE,
7	84814912	1	BEARING, BALL,
8	140045	6	WASHER, SPRING, Belleville, M10,
9	100016	6	NUT, M10, Cl 8,
10	84980545	1	ELBOW,
11	385683	2	BOLT, Hex, M4 x 10, 8.8, Full Thd,
12	84814932	2	CLAMP,
13	322355	2	WASHER, SPRING, Belleville, M4,
14	100012	2	NUT, M4, Cl 8,
15	84981021	1	COVER, , BSN C375
15	84457061	1	COVER, , ASN D376
16	322357	2	WASHER, SPRING, Belleville, M6,
17	84814892	2	NUT, WING, M6 x 1,
18	412250	1	NUT, LOCK, M8 x 1.25, Cl 8,
19	322358	2	WASHER, SPRING, Belleville, M8,
20	429855	1	COVER, {PP:80429855}
21	89706690	1	NUT, M8, Cl 8,
22	425093	1	CLIP, {PP:80425093}
23	84817004	3	CONNECTOR, HYD.,
24	84439904	1	TUBE,
25	130011	2	PIN, SPLIT (COTTER), {PP:80130011} M5 x 40,
26	916105	1	PIN, {PP:80916105}
27	916107	1	WASHER, 35 OD x 25.5 ID x 4 mm Thick
28	140021	1	WASHER, M20 x 37 x 3,
29	323713	3	NIPPLE, LUBE, {PP:80323713}
30	84814929	1	NIPPLE, LUBE, , BSN C363
30	323713	1	NIPPLE, LUBE, {PP:80323713} , ASN D364
31	84439905	1	TUBE,
32	84439906	1	TUBE,

16.207(01) UNLOADING AUGER

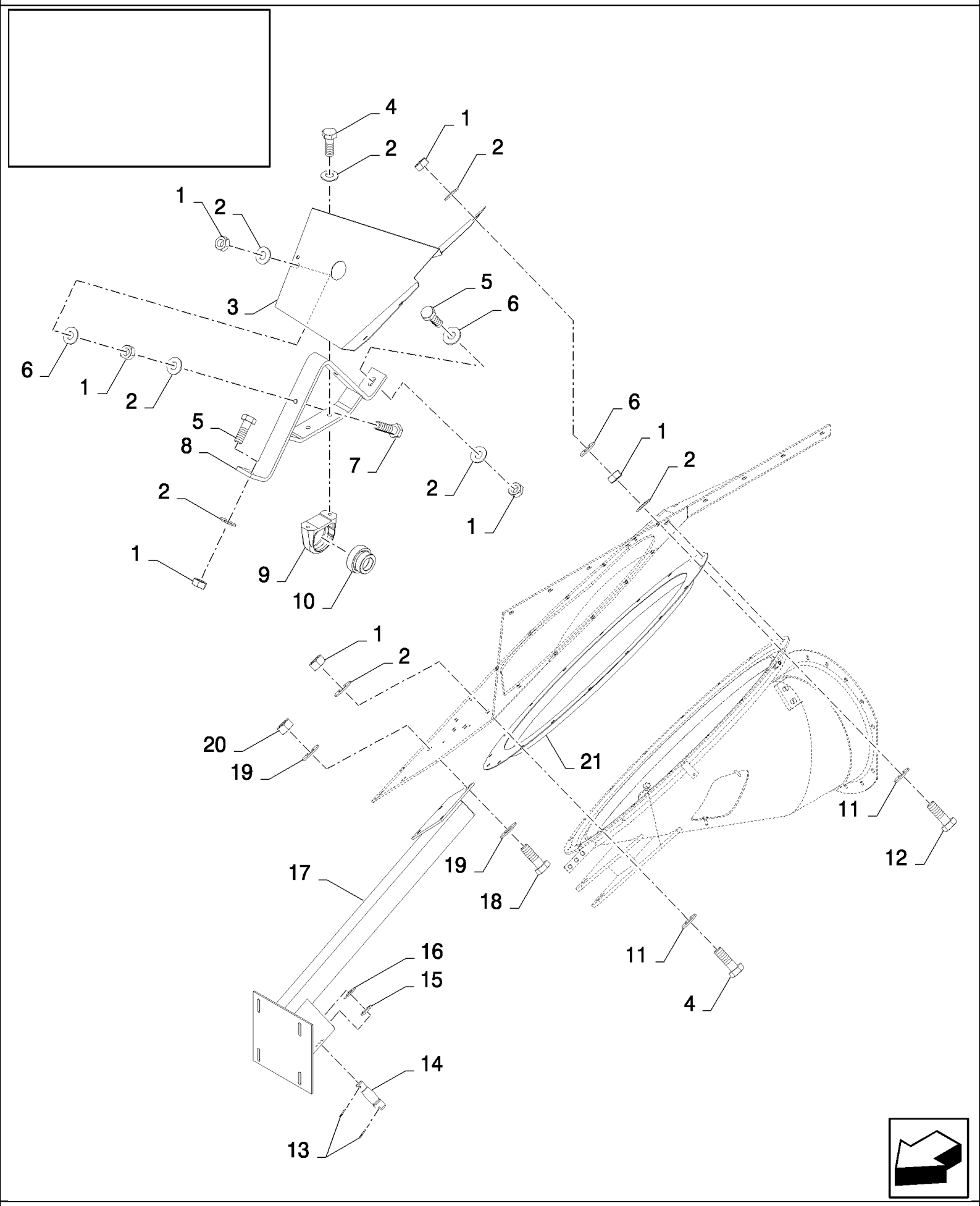

16.207(01) UNLOADING AUGER

ссылка	Номер детали	Кол-во	Описание
1	100016	27	NUT, M10, Cl 8,
2	140045	29	WASHER, SPRING, Belleville, M10,
3	84980551	1	SHIELD,
4	43139	17	SCREW, {PP:80043139} M10x25
5	43140	2	BOLT, Hex, M10 x 30, 8.8, Full Thd,
6	378244	6	WASHER, M10,
7	120112	2	BOLT, Hex, M10 x 40, 8.8, Full Thd,
8	84980403	1	SUPPORT,
9	84980436	1	HOUSING, BEARING,
10	84814912	1	BEARING, BALL,
11	140017	18	WASHER, M10 x 20 x 2,
12	120112	3	BOLT, {PP:80120112} Hex, M10 x 40, 8.8, Full Thd,
13	130011	2	PIN, SPLIT (COTTER), {PP:80130011} M5 x 40,
14	916105	1	PIN, {PP:80916105}
15	916107	1	WASHER, 35 OD x 25.5 ID x 4 mm Thick
16	378247	1	WASHER, {PP:80378247} 20MM
17	84980540	1	SUPPORT,
18	43167	4	BOLT, Hex, M16 x 30, 8.8, Full Thd,
19	140048	8	WASHER, SPRING, Belleville, M16,
20	100020	4	NUT, M16, Cl 8,
21	84814951	1	RING,

16.208(01) GRAIN ELEVATOR, EXTENSIONS

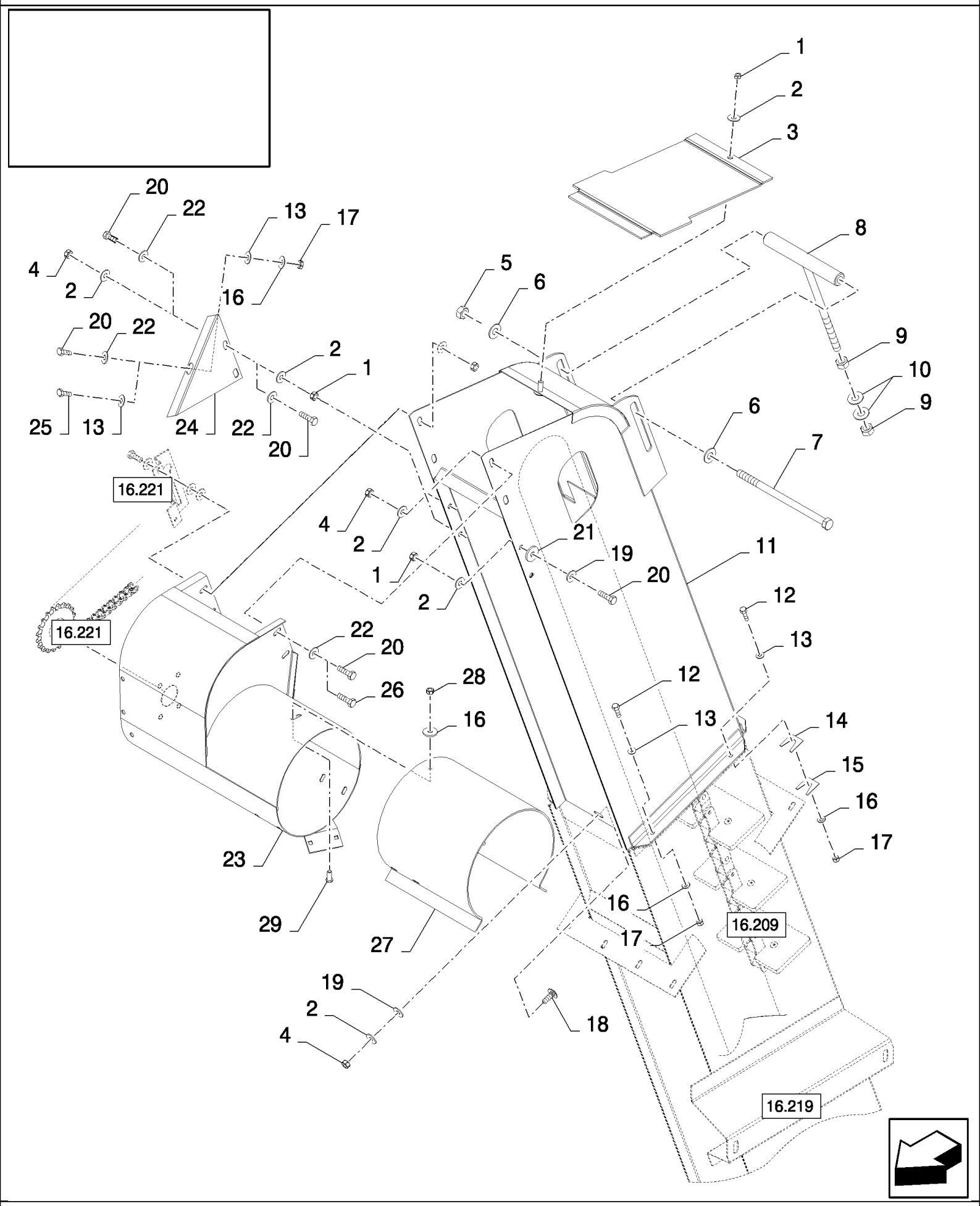

16.208(01) GRAIN ELEVATOR, EXTENSIONS

ссылка	Номер детали	Кол-во	Описание
1	86629542	4	NUT, LOCK, M8 x 1.25, Cl 8,
2	322358	9	WASHER, SPRING, Belleville, M8,
3	84980404	1	COVER,
4	89706690	5	NUT, M8, Cl 8,
5	100038	1	NUT, LOCK, M12 x 1.75, Cl 8,
6	140046	2	WASHER, SPRING, Belleville, M12,
7	86571290	1	BOLT, Hex, M12 x 240, 8.8, M12x240
8	84982238	1	TIE-ROD,
9	100020	2	NUT, M16, Cl 8,
10	140048	2	WASHER, SPRING, Belleville, M16,
11	84981045	1	ELEVATOR, EXTENSION, , STANDARD, FOR CS520 ONLY, FOR CL560 ONLY
11	84980378	1	ELEVATOR, EXTENSION, , FOR CS540, CS640, CS660 ONLY, STANDARD
11	84981371	1	ELEVATOR, EXTENSION, , FOR CS520 ONLY, REINFORCED
11	84981124	1	ELEVATOR, EXTENSION, , REINFORCED, FOR CS540, CS640, CS660 ONLY
12	120100	5	BOLT, Hex, M6 x 20, 8.8,
13	86588450	7	WASHER, M6,
14	80481491	AR	PLATE, ADJUSTING,
15	481489	AR	PLATE, ADJUSTING, {PP:80481489}
16	322357	6	WASHER, SPRING, Belleville, M6,
17	353308	6	NUT, LOCK, M6 x 1, Cl 8,
18	86507486	1	BOLT, CARRIAGE, Short NK, M8 x 20, Cl8.8, Full Thd,
19	378243	4	WASHER, M8,
20	43127	7	BOLT, Hex, M8 x 25, 8.8, , BSN C363
20	120104	2	BOLT, Hex, M8 x 20, 8.8, , ASN D364
21	140041	1	WASHER, M8 x 28 x 3,
22	140016	6	WASHER, M8 x 16 x 1.6,
23	84982244	1	TUBE, , BSN C511
23	87397198	1	TUBE, , ASN D512
24	84980409	1	REINFORCEMENT,
25	86508568	1	BOLT, Hex, M6 x 16, 8.8, , ASN D364
26	16043224	3	BOLT, Hex, M8 x 16, 8.8, Full Thd, , ASN D364
27	84453649	1	EXTENSION, , FOR CS660 ONLY, ASN D364
28	15896221	5	NUT, M6, Cl 10, , FOR CS660 ONLY, ASN D364
29	86512439	5	BOLT, CARRIAGE, Short NK, M6 x 16, Cl8.8, Full Thd, , FOR CS660 ONLY, ASN D364

16.209(01) GRAIN ELEVATOR CHAIN

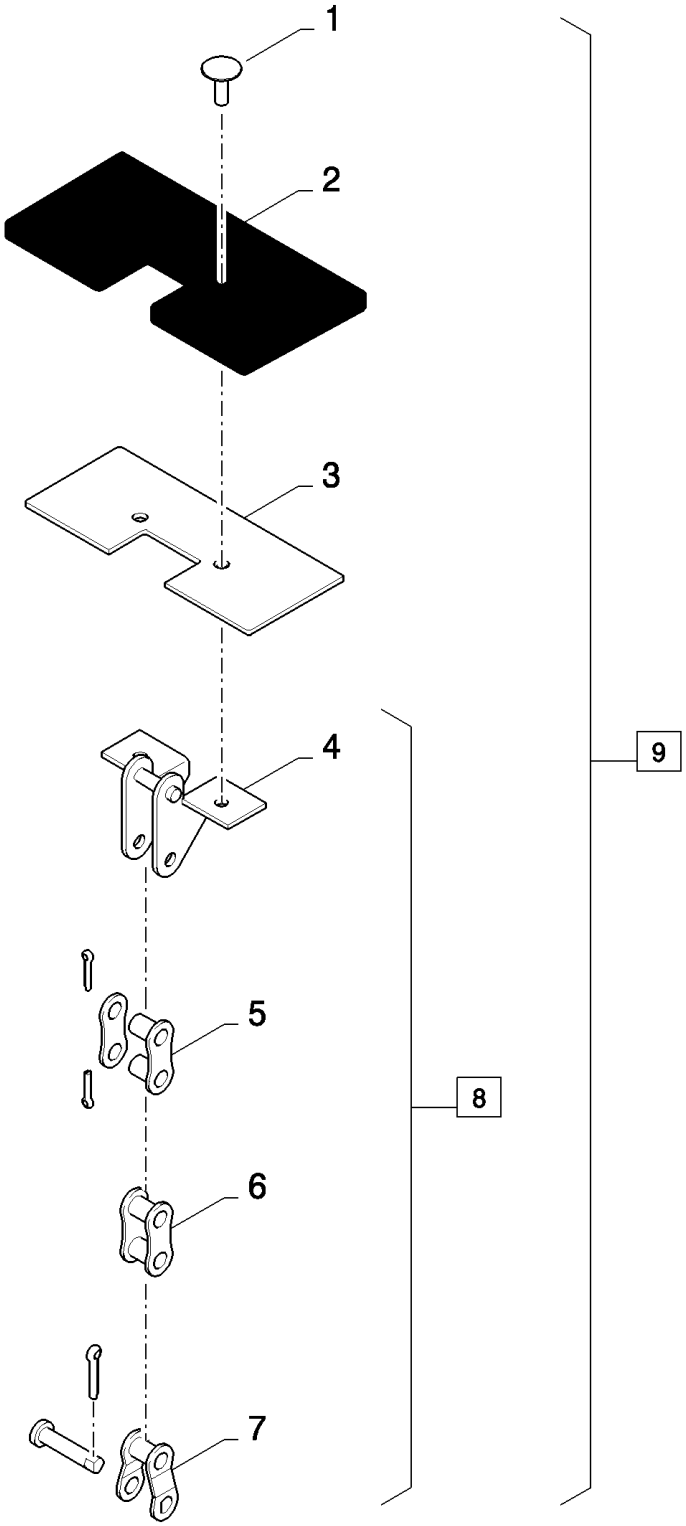

16.209(01) GRAIN ELEVATOR CHAIN

ссылка	Номер детали	Кол-во	Описание
1	NS	AR	NOT SERVICED, Rivet, FOR CS540, CS640, CS660 ONLY
1	NS	AR	NOT SERVICED, , FOR CL560, CS520 ONLY
2	9835453	AR	FLIGHT, RUBBER, , FOR CS540, CS640, CS660 ONLY
2	9835453	AR	FLIGHT, RUBBER, , FOR CL560, CS520 ONLY
3	84015241	AR	PLATE, , FOR CS540, CS640, CS660 ONLY
3	84015241	AR	PLATE, , FOR CL560, CS520 ONLY
4	84017435	AR	LINK, CONNECTING, , FOR CS540, CS640, CS660 ONLY
4	84017435	AR	LINK, CONNECTING, , FOR CL560, CS520 ONLY
5	40241	AR	LINK, CONNECTING, , FOR CS540, CS640, CS660 ONLY
5	40241	AR	LINK, CONNECTING, , FOR CL560, CS520 ONLY
6	86595253	AR	LINK, CHAIN, , FOR CS540, CS640, CS660 ONLY
6	86595253	AR	LINK, CHAIN, , FOR CL560, CS520 ONLY
7	40242	3	LINK, OFFSET, , FOR CS540, CS640, CS660 ONLY
7	40242	2	LINK, OFFSET, , FOR CL560, CS520 ONLY
8	84981580	1	CHAIN, (4 to 7), FOR CS640, CS660 ONLY
8	84981580	1	CHAIN, (4 to 7), FOR CS540 ONLY, BSN C435
8	84461202	1	(4 to 7), FOR CS540 ONLY, ASN D436
8	84452605	1	CHAIN, (4 to 7), FOR CL560, CS520 ONLY, BSN C435
8	84461200	1	(4 to 7), FOR CL560, CS520 ONLY, ASN D436
9	84980970	1	CHAIN, (1 to 8), FOR CL560, CS520 ONLY, BSN C435
9	84461192	1	CHAIN, (1 to 8), FOR CL560, CS520 ONLY, ASN D436
9	84980072	1	CHAIN, (1 to 8), FOR CS640, CS660 ONLY
9	84980072	1	CHAIN, (1 to 8), FOR CS540 ONLY, BSN C435
9	84461193	1	CHAIN, (1 to 8), FOR CS540 ONLY, ASN D436

16.210(01) UNLOADING AUGER

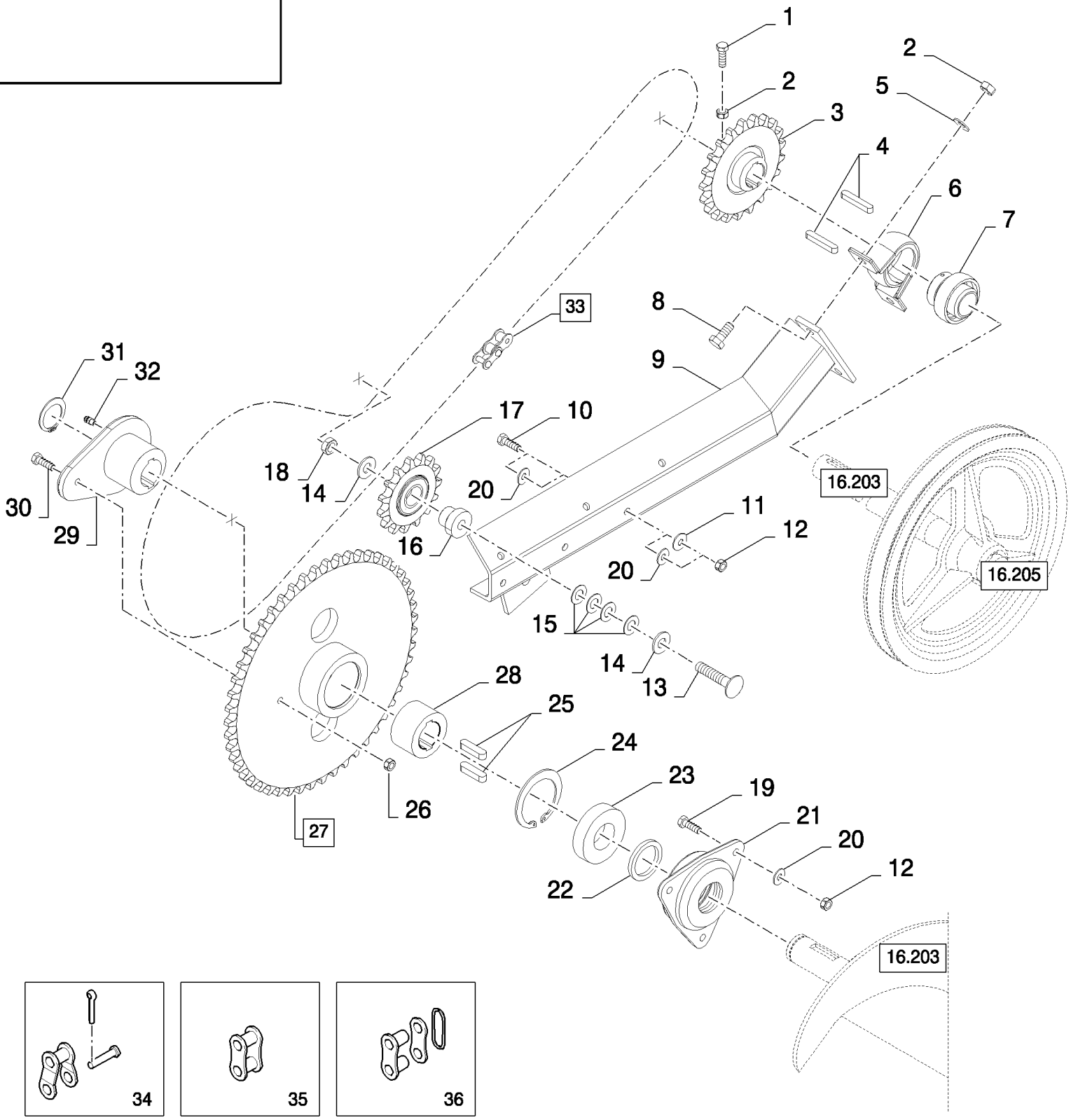

CS660 COMBINE BASE UNIT (1/03-) - Unloading

16.210(01) UNLOADING AUGER

ссылка	Номер детали	Кол-во	Описание
1	43138	1	BOLT, Hex, M10 x 20, 8.8, Full Thd,
2	100016	3	NUT, M10, Cl 8,
3	84981078	1	SPROCKET, DRIVEN,
4	170010	2	KEY, {PP:80170010}
5	140045	2	WASHER, SPRING, Belleville, M10,
6	80399605	1	HOUSING,
7	325110	1	BEARING ASSY, {PP:80325110} , BSN C363
7	84069440	1	BEARING, BALL, , ASN D364
8	43139	2	SCREW, {PP:80043139} M10x25
9	84980406	1	SUPPORT,
10	120104	3	BOLT, Hex, M8 x 20, 8.8,
11	412650	3	WASHER, SPRING, Belleville, M8,
12	89706690	6	NUT, M8, Cl 8,
13	412097	1	BOLT, CARRIAGE, Short NK, M12 x 60, Cl8.8,
14	378245	2	WASHER, M12,
15	140175	AR	WASHER, {PP:80140175} 13MM
16	84071951	1	BUSHING,
17	84980926	1	SPROCKET,
18	412126	1	NUT, LOCK, M12 x 1.75, Cl 8,
19	43127	3	BOLT, Hex, M8 x 25, 8.8,
20	322358	9	WASHER, SPRING, Belleville, M8,
21	84980468	1	HOUSING, BEARING,
22	220011	1	SEAL, {PP:80220011}
23	84438926	1	BEARING, BALL,
24	370018	1	RING, SNAP, {PP:80370018}
25	354775	2	KEY, {PP:80354775}
26	412250	1	NUT, LOCK, M8 x 1.25, Cl 8, , BSN C363
26	412250	6	NUT, LOCK, M8 x 1.25, Cl 8, , ASN D364
27	84981079	1	SPROCKET, DRIVEN, (28)
28	9819016	1	SLEEVE, {PP:89819016}
29	84980558	1	HUB,
30	43129	1	BOLT, Hex, M8 x 40, 8.8, , BSN C363
30	43129	6	BOLT, Hex, M8 x 40, 8.8, , ASN D364
31	11068376	1	RING, SNAP, M35, Ext,
32	321204	1	NIPPLE, LUBE, {PP:80321204} M6 x 1, 16mm lg,
33	84981073	1	CHAIN, (34 to 36)
34	86595275	1	LINK, OFFSET,
35	86595251	113	LINK, CHAIN,
36	165590	1	LINK, CONNECTING, {PP:80165590}

16.211(01) UNLOADING AUGER

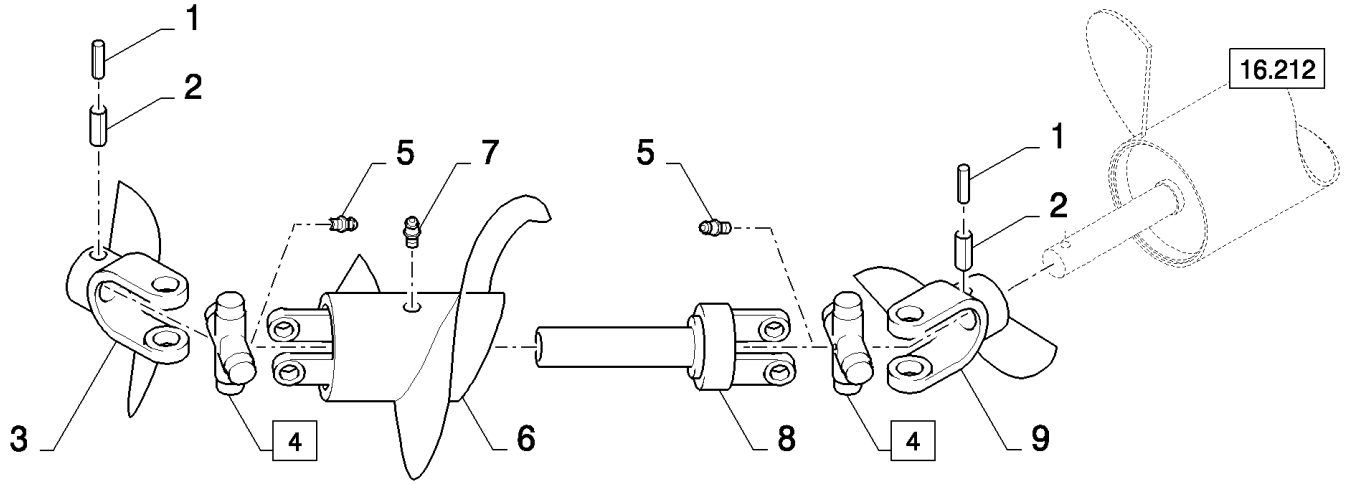

16.211(01) UNLOADING AUGER

ссылка	Номер детали	Кол-во	Описание
1	412689	2	PIN, LOCK, {PP:80412689} M8 x 50, Slotted,
2	130054	2	PIN, LOCK, {PP:80130054} M13 x 55, Slotted,
3	916104	1	YOKE, {PP:80916104}
4	916025	2	SPIDER, {PP:80916025} (5)
5	412014	2	NIPPLE, LUBE, {PP:80412014}
6	920224	1	AUGER, {PP:80920224}
7	321204	1	NIPPLE, LUBE, {PP:80321204} M6 x 1, 16mm lg,
8	84817002	1	YOKE,
9	84817003	1	YOKE,

16.212(01) UNLOADING AUGER

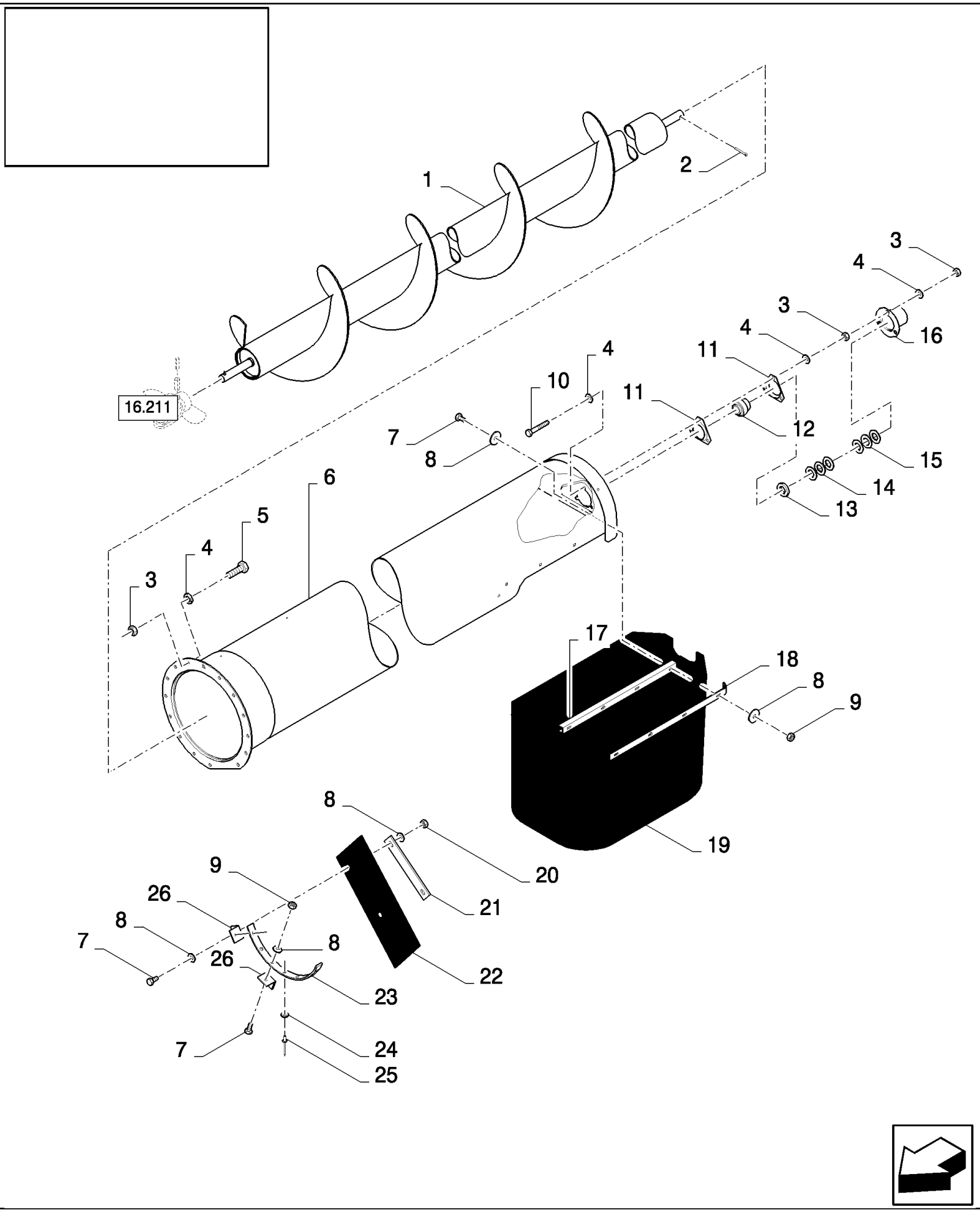

CS660 COMBINE BASE UNIT (1/03-) - Unloading

16.212(01) UNLOADING AUGER

ссылка	Номер детали	Кол-во	Описание
1	84814984	1	AUGER, , FOR 3.85M ONLY
1	84023189	1	AUGER, , FOR 4.65M ONLY
1	84056827	1	AUGER, , FOR 5.20M ONLY
2	14610270	1	PIN, LOCK, M10 x 45, Slotted,
3	100016	21	NUT, M10, Cl 8,
4	140045	24	WASHER, SPRING, Belleville, M10,
5	43138	15	BOLT, Hex, M10 x 20, 8.8, Full Thd,
6	84818557	1	TUBE, , FOR 3.85M ONLY
6	84807617	1	TUBE, , FOR 4.65M ONLY
6	84800557	1	TUBE, , FOR 5.20M ONLY
7	86508568	13	BOLT, Hex, M6 x 16, 8.8,
7	120100	15	BOLT, Hex, M6 x 20, 8.8,
8	322357	28	WASHER, SPRING, Belleville, M6,
9	15896221	13	NUT, M6, Cl 10,
10	120112	3	BOLT, Hex, M10 x 40, 8.8, Full Thd,
11	86548970	2	FLANGE,
12	325106	1	BEARING ASSY, {PP:80325106}
13	84814900	AR	WASHER,
14	84814901	AR	WASHER,
15	441176	AR	WASHER, {PP:80441176} 31MM
16	84807620	1	COVER,
17	84443764	1	SUPPORT,
18	84814934	2	PLATE, FIXING,
19	9811657	1	CANVAS, {PP:89811657}
20	353308	2	NUT, LOCK, M6 x 1, Cl 8,
21	84814935	1	PLATE,
22	439876	1	CANVAS, {PP:80439876} , BSN C323
22	84814953	1	CANVAS, , ASN D324
23	455862	1	SUPPORT, {PP:80455862}
24	335872	7	WASHER, {PP:80335872} 4MM
25	NS	7	NOT SERVICED, Rivet
26	333349	2	BRACKET, {PP:80333349} , BSN C323
26	84814930	2	BRACKET, , ASN D324
27	120100	2	BOLT, {PP:80120100} Hex, M6 x 20, 8.8, , BSN C383

16.213(01) GRAINTANK - SHIELDS, RH

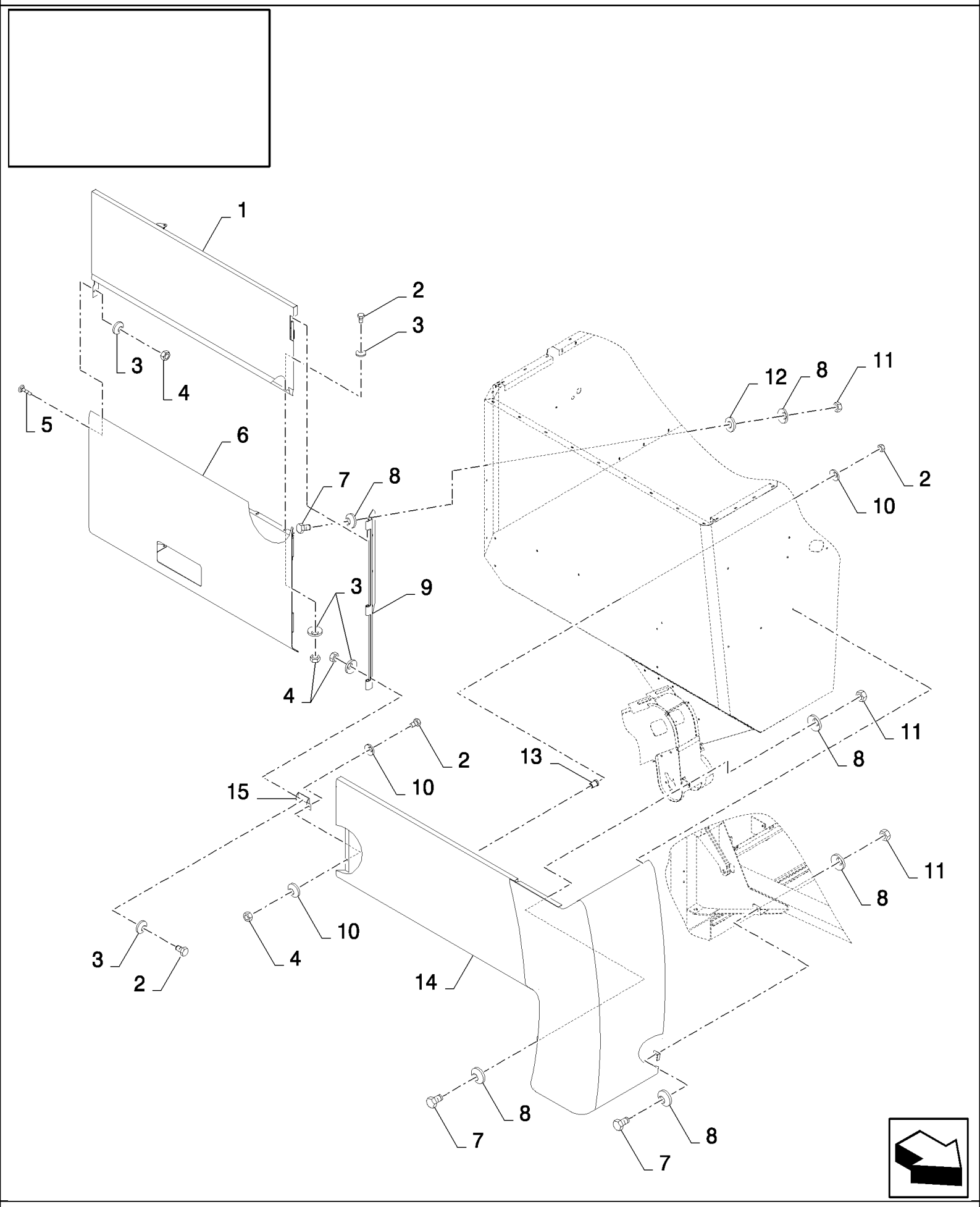

CS660 COMBINE BASE UNIT (1/03-) - Unloading

16.213(01) GRAINTANK - SHIELDS, RH

ссылка	Номер детали	Кол-во	Описание
1	84434007	1	SHIELD,
2	120100	20	BOLT, Hex, M6 x 20, 8.8,
3	322357	15	WASHER, SPRING, Belleville, M6,
4	15896221	9	NUT, M6, Cl 10,
5	9706703	1	BOLT, CARRIAGE, Short NK, M6 x 20, Cl8.8, Full Thd,
6	84434112	1	SHIELD,
7	43127	6	BOLT, Hex, M8 x 25, 8.8,
8	412650	12	WASHER, SPRING, Belleville, M8,
9	84433978	1	SUPPORT,
10	412649	14	WASHER, SPRING, Belleville, M6,
11	89706690	6	NUT, M8, Cl 8,
12	86511315	4	WASHER, M8 x 16 x 1.6,
13	80740622	12	NUT, M6x16
14	84434143	1	SHIELD,
15	84438873	1	BRACKET,

16.214(01) GRAINTANK - SHIELDS, RH

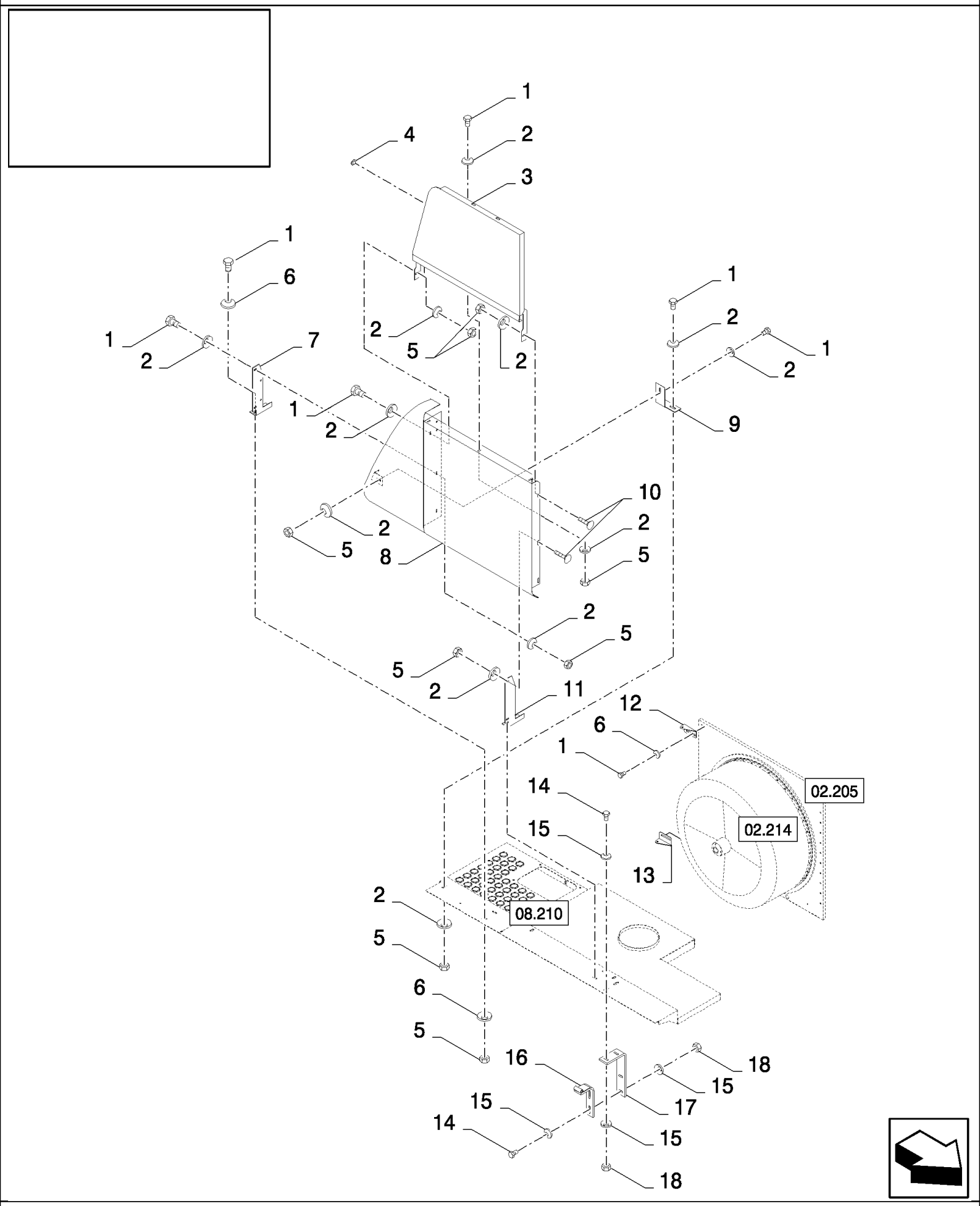

CS660 COMBINE BASE UNIT (1/03-) - Unloading

16.214(01) GRAINTANK - SHIELDS, RH

ссылка	Номер детали	Кол-во	Описание
1	120100	16	BOLT, Hex, M6 x 20, 8.8,
2	322357	19	WASHER, SPRING, Belleville, M6,
3	84441382	1	SHIELD,
4	331233	1	PLUG, {PP:80331233}
5	15896221	15	NUT, M6, Cl 10,
6	412649	12	WASHER, SPRING, Belleville, M6,
7	84444170	1	PLATE,
8	84434264	1	SHIELD,
9	84434025	1	BRACKET,
10	9706703	3	BOLT, CARRIAGE, Short NK, M6 x 20, Cl8.8, Full Thd,
11	84433969	1	REINFORCEMENT,
12	84433975	1	BRACKET,
13	84433976	1	BRACKET,
14	43128	4	BOLT, Hex, M8 x 30, 8.8,
14	43127	4	BOLT, Hex, M8 x 25, 8.8,
15	412650	8	WASHER, SPRING, Belleville, M8,
16	84435936	1	HINGE, , BSN C363
16	84449291	1	HINGE, , ASN D364
17	84435892	1	, BSN C363
18	89706690	4	NUT, M8, Cl 8,

16.215(01) GRAINTANK

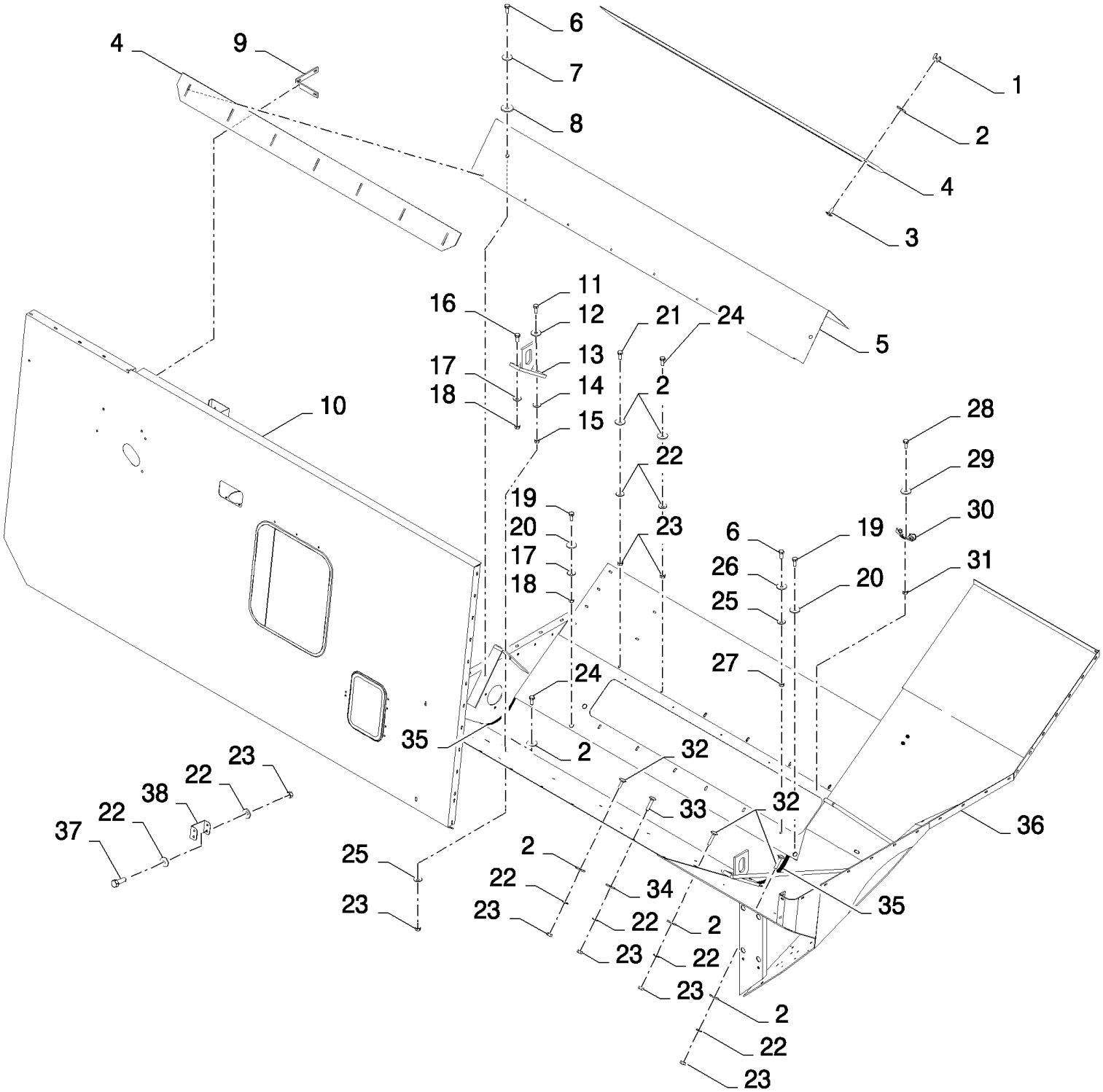

CS660 COMBINE BASE UNIT (1/03-) - Unloading

16.215(01) GRAINTANK

ссылка	Номер детали	Кол-во	Описание
1	84814892	14	NUT, WING, M6 x 1,
2	140040	AR	WASHER, M6 x 22 x 2,
3	86512439	14	BOLT, CARRIAGE, Short NK, M6 x 16, Cl8.8, Full Thd,
4	84981932	2	PLATE, , FOR CL560 ONLY, FOR CS520, CS540 ONLY
4	84980260	2	PLATE, , FOR CS640, CS660 ONLY
5	84981933	1	PLATE, , FOR CS520, CS540 ONLY, FOR CL560 ONLY
5	84980259	1	PLATE, , FOR CS640, CS660 ONLY
6	120104	9	BOLT, Hex, M8 x 20, 8.8,
7	322358	2	WASHER, SPRING, Belleville, M8,
8	140041	2	WASHER, M8 x 28 x 3,
9	84980257	1	BRACKET, , BSN C363
10	84981054	1	PLATE, , FOR CL560 ONLY, FOR CS520 ONLY
10	84980850	1	PLATE, , FOR CS540 ONLY, BSN C363
10	84448331	1	PLATE, , FOR CS540 ONLY, ASN D364
10	84980247	1	PLATE, , FOR CS640, CS660 ONLY, BSN C363
10	84982578	1	PLATE, , FOR CS640, CS660 ONLY, ASN D364
11	120090	2	BOLT, Hex, M16 x 50, 8.8,
12	333041	2	WASHER, {PP:80333041} 16MM
13	80447217	1	SUSPENSION,
14	140048	2	WASHER, SPRING, Belleville, M16,
15	100020	2	NUT, M16, Cl 8,
16	86629541	3	BOLT, Hex, M12 x 40, 8.8, Full Thd,
17	140046	10	WASHER, SPRING, Belleville, M12,
18	9706685	10	NUT, M12, Cl 8,
19	9706687	10	BOLT, Hex, M12 x 30, 8.8,
20	84014353	10	WASHER, LOCK, 13MM
21	86977786	1	BOLT, Hex, M6 x 25, 8.8,
22	412649	AR	WASHER, SPRING, Belleville, M6,
23	15896221	AR	NUT, M6, Cl 10,
24	120100	AR	BOLT, Hex, M6 x 20, 8.8,
25	412650	AR	WASHER, SPRING, {PP:80412650} Belleville, M8, 6MM
26	86511315	7	WASHER, M8 x 16 x 1.6,
27	89706690	7	NUT, M8, Cl 8,
28	86511042	6	SCREW, Cross Pan Hd, M4 x 16,
29	362785	6	WASHER, {PP:80362785}
30	362786	6	FASTENER, {PP:80362786}
31	385681	6	NUT, LOCK, {PP:80385681} M4 x .7, Cl 8, M4
32	86512441	3	BOLT, CARRIAGE, Short NK, M6 x 30, Cl8.8, Full Thd, M6x30
33	9706703	AR	BOLT, CARRIAGE, Short NK, M6 x 20, Cl8.8, Full Thd,
34	140016	AR	WASHER, M8 x 16 x 1.6,
35	80400908	AR	SEAL, L=0.4M
36	84980837	1	GRAIN TANK, , FOR CS520, CS540 ONLY, FOR CL560 ONLY
36	84980228	1	GRAIN TANK, , FOR CS640, CS660 ONLY
37	86508568	2	BOLT, Hex, M6 x 16, 8.8,
38	84447829	1	BRACKET,

16.217(01) GRAINTANK

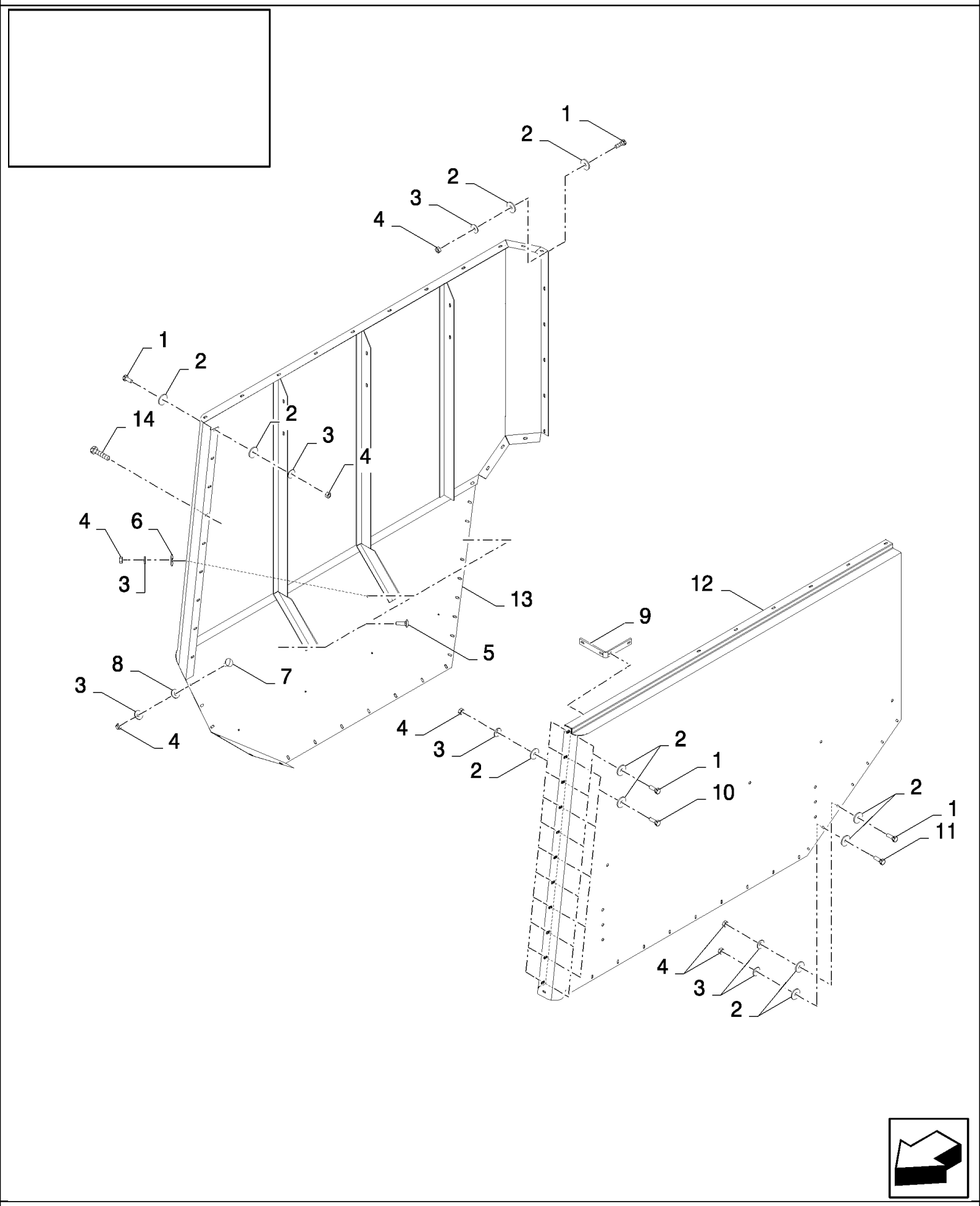

CS660 COMBINE BASE UNIT (1/03-) - Unloading

16.217(01) GRAINTANK

ссылка	Номер детали	Кол-во	Описание
1	86508568	AR	BOLT, Hex, M6 x 16, 8.8,
2	140040	AR	WASHER, M6 x 22 x 2,
3	412649	AR	WASHER, SPRING, Belleville, M6,
4	15896221	AR	NUT, M6, Cl 10,
5	86512441	3	BOLT, CARRIAGE, Short NK, M6 x 30, Cl8.8, Full Thd, M6x30
6	140016	3	WASHER, M8 x 16 x 1.6,
7	86512439	AR	BOLT, CARRIAGE, Short NK, M6 x 16, Cl8.8, Full Thd,
8	140041	AR	WASHER, M8 x 28 x 3,
9	84980257	1	BRACKET, , BSN C363
10	43117	6	BOLT, Hex, M6 x 30, 8.8,
11	120100	13	BOLT, Hex, M6 x 20, 8.8,
12	84980849	1	PLATE, LH, FOR CS540 ONLY
12	84981038	1	PANEL, SIDE, LH, FOR CL560 ONLY, FOR CS520 ONLY
12	84980242	1	PLATE, LH, FOR CS640, CS660 ONLY, BSN C363
12	84982576	1	PANEL, SIDE, , FOR CS640, CS660 ONLY, ASN D364
13	84980848	1	PLATE, RH, FOR CS540 ONLY
13	84980229	1	PLATE, RH, FOR CS640, CS660 ONLY, BSN C363
13	84449002	1	PANEL, SIDE, , FOR CS640, CS660 ONLY, ASN D364
13	84981050	1	PANEL, SIDE, RH, FOR CL560 ONLY, FOR CS520 ONLY
14	120106	1	BOLT, Hex, M8 x 40, 8.8, Full Thd, , FOR CS540 ONLY

16.218(01) GRAINTANK

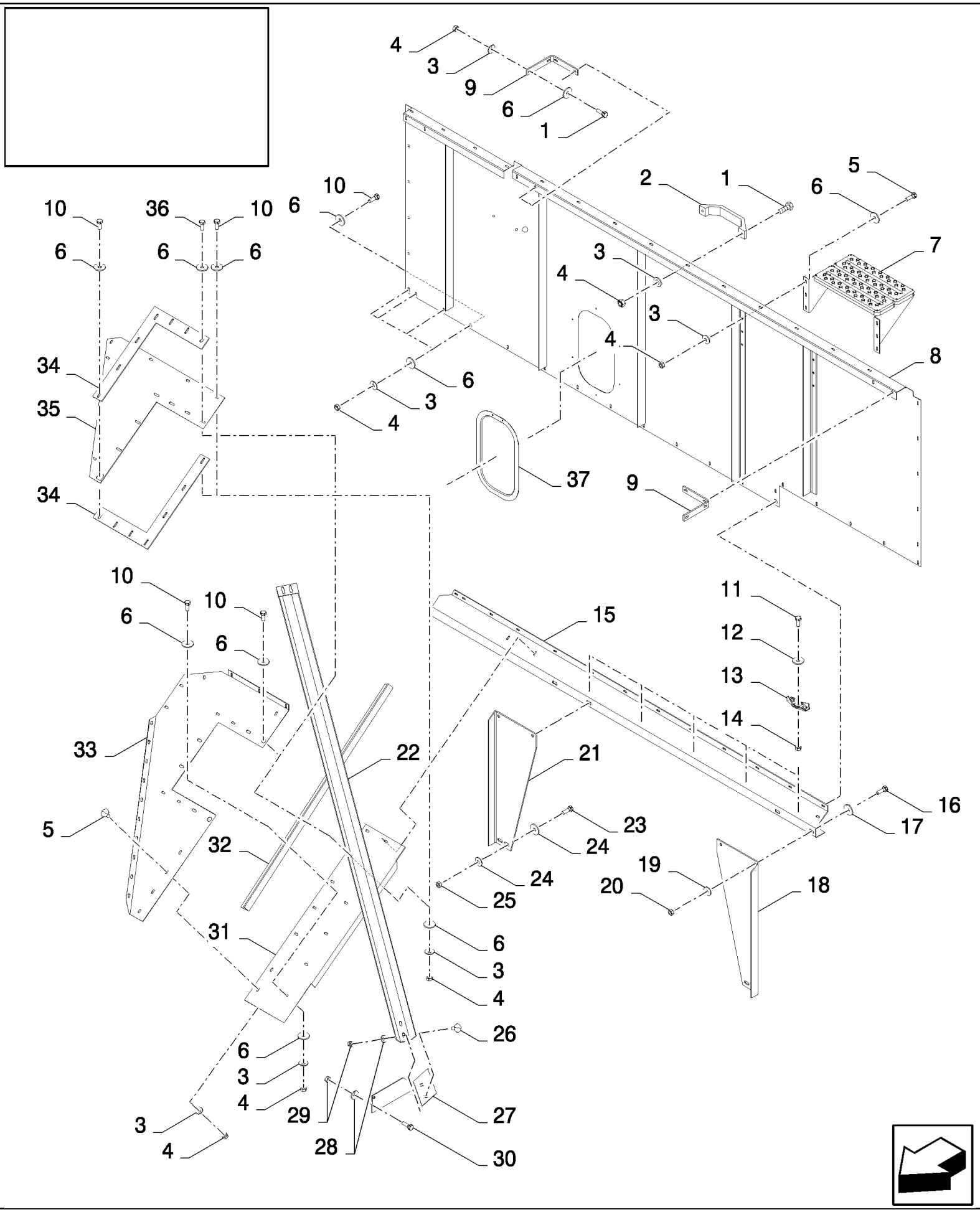

CS660 COMBINE BASE UNIT (1/03-) - Unloading

16.218(01) GRAINTANK

ссылка	Номер детали	Кол-во	Описание
1	86508568	17	BOLT, Hex, M6 x 16, 8.8,
1	120100	1	BOLT, Hex, M6 x 20, 8.8,
2	89837395	1	HANDLE,
3	412649	AR	WASHER, SPRING, Belleville, M6,
4	15896221	AR	NUT, M6, Cl 10,
5	9706703	11	BOLT, CARRIAGE, Short NK, M6 x 20, Cl8.8, Full Thd,
6	140040	AR	WASHER, M6 x 22 x 2,
7	84980712	1	STEP,
8	84981052	1	PLATE, , FOR CL560 ONLY, FOR CS520 ONLY
8	84980851	1	PLATE, , FOR CS540 ONLY
8	84980235	1	PLATE, , FOR CS640, CS660 ONLY, BSN C363
8	84982572	1	PLATE, , FOR CS640, CS660 ONLY, BSN F364391
8	84455244	1	PLATE, , FOR CS640, CS660 ONLY, ASN D392
9	84980257	2	BRACKET, , BSN C363
10	120100	AR	BOLT, Hex, M6 x 20, 8.8,
11	86511042	6	SCREW, Cross Pan Hd, M4 x 16,
12	362785	6	WASHER, {PP:80362785}
13	362786	6	FASTENER, {PP:80362786}
14	385681	6	NUT, LOCK, {PP:80385681} M4 x .7, Cl 8, M4
15	84980860	1	SUPPORT, , FOR CS520, CS540 ONLY, FOR CL560 ONLY
15	84980250	1	SUPPORT, , FOR CS640, CS660 ONLY
16	43140	4	BOLT, Hex, M10 x 30, 8.8, Full Thd,
17	140042	4	WASHER, M10 x 34 x 3,
18	84980255	1	SUPPORT,
19	140045	4	WASHER, SPRING, Belleville, M10,
20	100016	4	NUT, M10, Cl 8,
21	84980256	1	SUPPORT,
22	84980854	1	SUPPORT, , FOR CS540 ONLY
22	84981056	1	SUPPORT, , FOR CL560 ONLY, FOR CS520 ONLY
22	84447960	1	SUPPORT, , FOR CS640, CS660 ONLY, BSN C363
22	84447960	1	SUPPORT, , FOR CS640, CS660 ONLY, ASN D364
23	300389	4	BOLT, Hex, M12 x 35, 8.8, Full Thd,
24	394630	8	WASHER, {PP:80394630} 13MM
25	9706685	4	NUT, M12, Cl 8,
26	86507486	4	BOLT, CARRIAGE, Short NK, M8 x 20, Cl8.8, Full Thd,
27	84980888	1	SUPPORT, , BSN C487
27	84983469	1	SUPPORT, , ASN D488
28	322358	6	WASHER, SPRING, Belleville, M8,
29	89706690	6	NUT, M8, Cl 8,
30	120104	2	BOLT, Hex, M8 x 20, 8.8,
31	84980861	1	PLATE, , FOR CS520, CS540 ONLY, FOR CL560 ONLY
31	84980810	1	PLATE, , FOR CS640, CS660 ONLY
32	84980251	1	REINFORCEMENT,
33	84980859	1	PLATE, , FOR CS540 ONLY, BSN C363
33	84980254	1	PLATE, , FOR CS640, CS660 ONLY, BSN C363

16.218(01) GRAINTANK

ссылка	Номер детали	Кол-во	Описание
34	84449357	2	PLATE, , ASN D364
35	84449399	1	PLATE, , FOR CS520, CS540 ONLY, FOR CL560 ONLY, ASN D364
35	84449389	1	PLATE, , FOR CS640, CS660 ONLY, ASN D364
36	86977786	2	BOLT, Hex, M6 x 25, 8.8, , ASN D364
37	84455410	1	PLATE, , ASN D392

16.219(01) GRAIN ELEVATOR

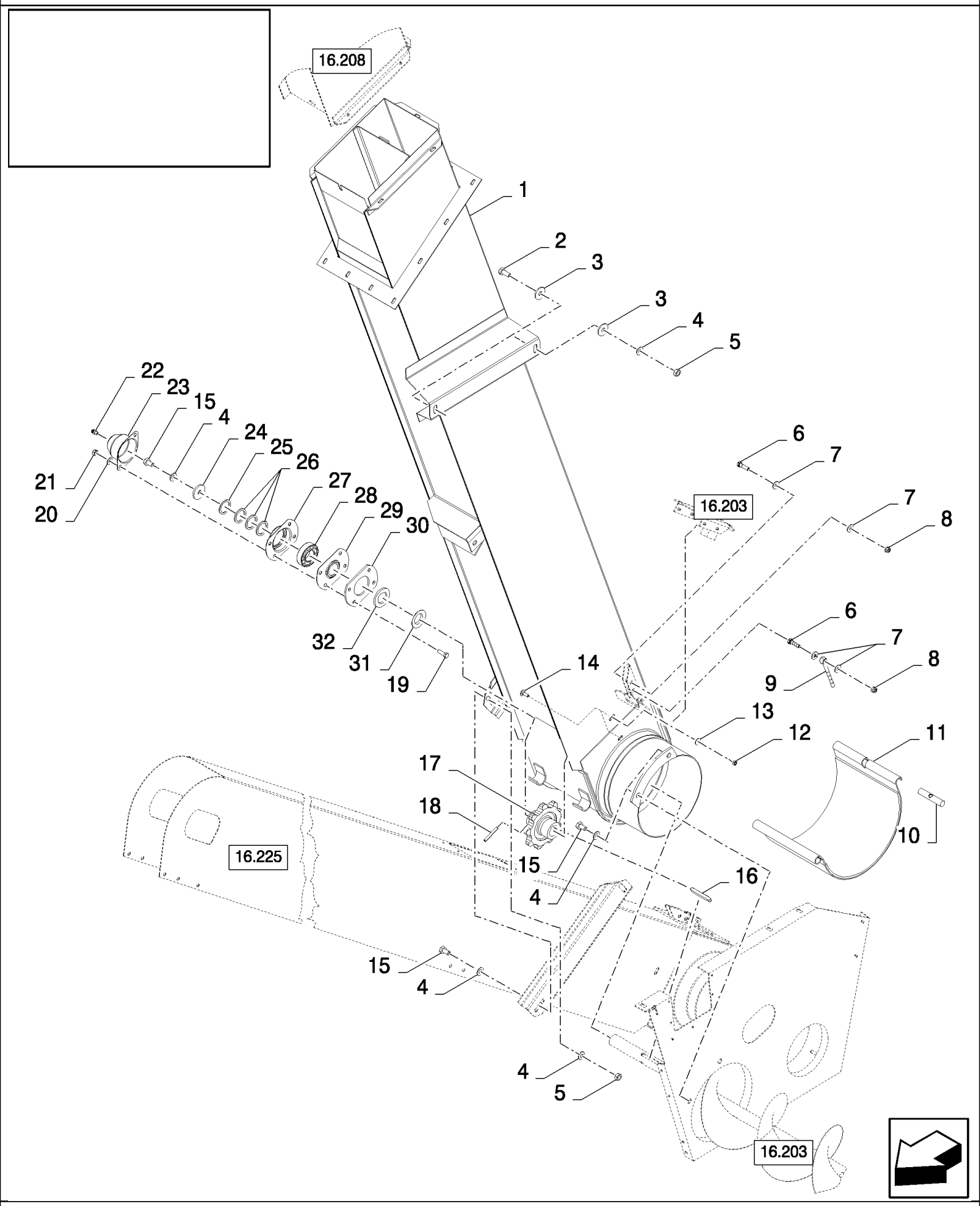

CS660 COMBINE BASE UNIT (1/03-) - Unloading

16.219(01) GRAIN ELEVATOR

ссылка	Номер детали	Кол-во	Описание
1	84980679	1	ELEVATOR, , STANDARD, BSN C363
1	84449377	1	ELEVATOR, , STANDARD, ASN D364
1	84981132	1	ELEVATOR, , REINFORCED
2	43139	2	SCREW, {PP:80043139} M10x25
3	140042	4	WASHER, M10 x 34 x 3,
4	140045	8	WASHER, SPRING, Belleville, M10,
4	140042	4	WASHER, M10 x 34 x 3,
5	100016	4	NUT, M10, Cl 8,
6	43128	2	BOLT, Hex, M8 x 30, 8.8,
7	86511315	4	WASHER, M8 x 16 x 1.6,
8	86629542	2	NUT, LOCK, M8 x 1.25, Cl 8,
9	9811378	1	U-BOLT,
10	9811398	1	ROD,
11	84980514	1	COVER,
11	84982648	1	GUARD, , PERFORATED (LONG HOLES)
12	15896221	4	NUT, M6, Cl 10,
13	412649	4	WASHER, SPRING, Belleville, M6,
14	9706703	4	BOLT, CARRIAGE, Short NK, M6 x 20, Cl8.8, Full Thd,
15	43138	5	BOLT, Hex, M10 x 20, 8.8, Full Thd,
15	43139	2	SCREW, M10x25
16	354775	1	KEY,
17	84981028	1	SPROCKET, DRIVEN,
18	333960	1	PIN, LOCK, M6 x 50, Slotted,
19	43127	4	BOLT, Hex, M8 x 25, 8.8,
20	322358	4	WASHER, SPRING, Belleville, M8,
21	89706690	4	NUT, M8, Cl 8,
22	332038	1	NIPPLE, LUBE,
23	310067	1	COVER,
24	140219	1	WASHER, 11MM
25	140109	AR	WASHER, 31MM
26	140110	AR	WASHER, 31MM
27	9511041	1	FLANGE,
28	210064	1	BEARING ASSY,
29	84814927	1	COVER,
30	84981540	1	FLANGE,
31	310072	1	RING,
32	220062	1	ELEMENT, SEALING,

16.221(01) GRAIN ELEVATOR, UPPER DRIVE

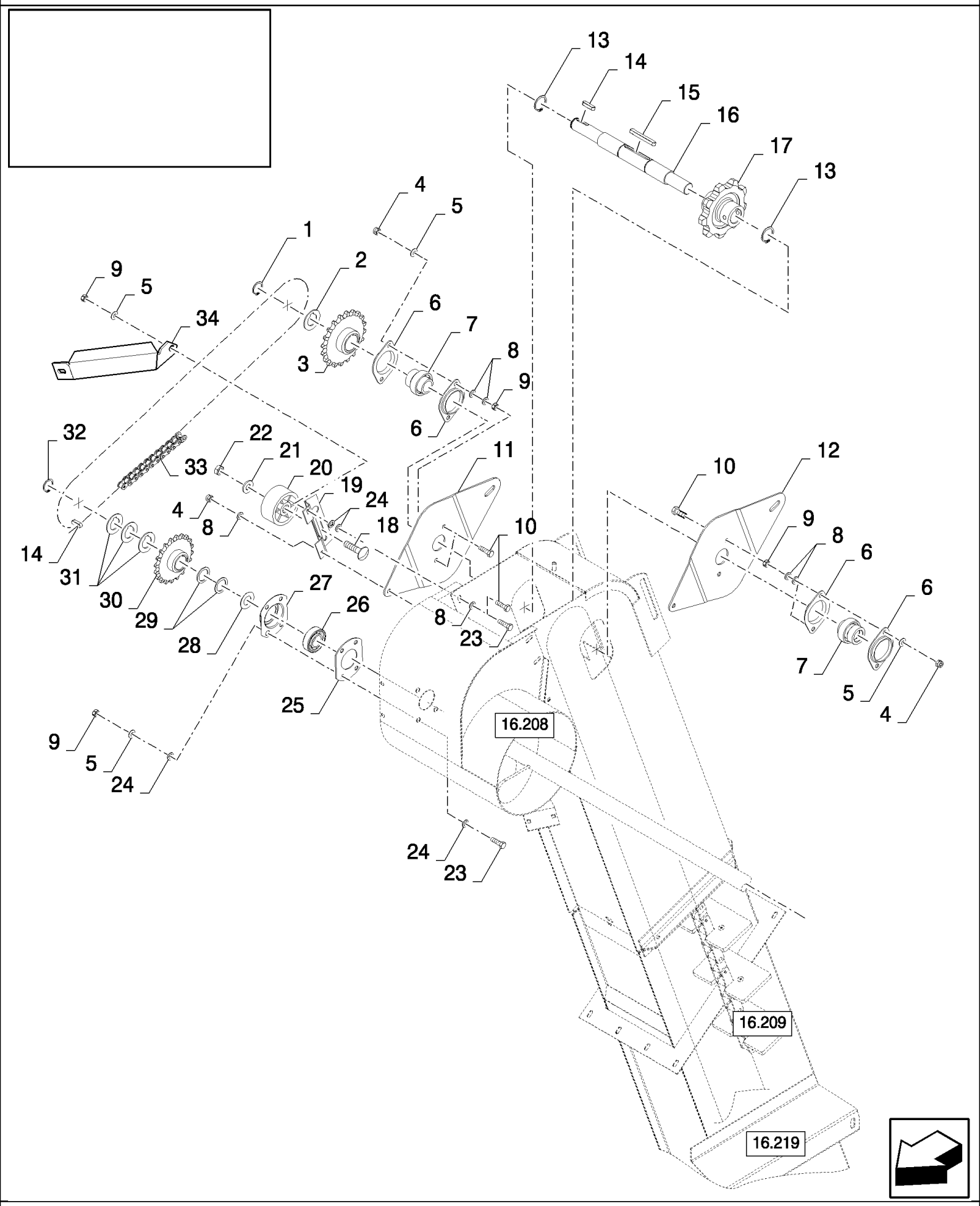

CS660 COMBINE BASE UNIT (1/03-) - Unloading

16.221(01) GRAIN ELEVATOR, UPPER DRIVE

ссылка	Номер детали	Кол-во	Описание
1	370002	1	RING, SNAP, {PP:80370002} M25, Ext,
2	444976	AR	WASHER, {PP:80444976}
3	84981212	1	SPROCKET, DRIVEN,
4	86629542	4	NUT, LOCK, M8 x 1.25, Cl 8,
5	322358	8	WASHER, SPRING, Belleville, M8,
6	86548974	4	FLANGE,
7	84992001	2	BEARING ASSY,
8	140016	8	WASHER, M8 x 16 x 1.6,
9	89706690	8	NUT, M8, Cl 8,
10	43128	4	BOLT, Hex, M8 x 30, 8.8,
11	84981356	1	PLATE,
12	84981025	1	PLATE,
13	11068376	2	RING, SNAP, M35, Ext,
14	170030	2	KEY, {PP:80170030} M8 x 7 x 32, Par,
15	354775	1	KEY, {PP:80354775}
16	84981299	1	SHAFT,
17	84981028	1	SPROCKET, DRIVEN,
18	334682	1	BOLT, CARRIAGE, Short NK, M12 x 50, Cl8.8, Full Thd,
19	84981355	1	SUPPORT,
20	334970	1	PINION, IDLER, {PP:80334970}
21	378245	1	WASHER, M12,
22	412126	1	NUT, LOCK, M12 x 1.75, Cl 8,
23	43127	4	BOLT, Hex, M8 x 25, 8.8,
24	378243	8	WASHER, M8,
25	310085	1	FLANGE, {PP:80310085}
26	210043	1	BEARING ASSY, {PP:80210043}
27	9511041	1	FLANGE, {PP:89511041}
28	140110	AR	WASHER, {PP:80140110} 31MM
29	140108	AR	WASHER, {PP:80140108} 31MM
30	84981030	1	SPROCKET, DRIVEN,
31	444974	AR	WASHER, {PP:80444974}
32	370003	1	RING, SNAP, {PP:80370003} M30, Ext,
33	592010	1	CHAIN, {PP:80592010}
34	84983280	1	REINFORCEMENT, , FOR CS640, CS660 ONLY

16.222(01) TAILINGS ELEVATORS

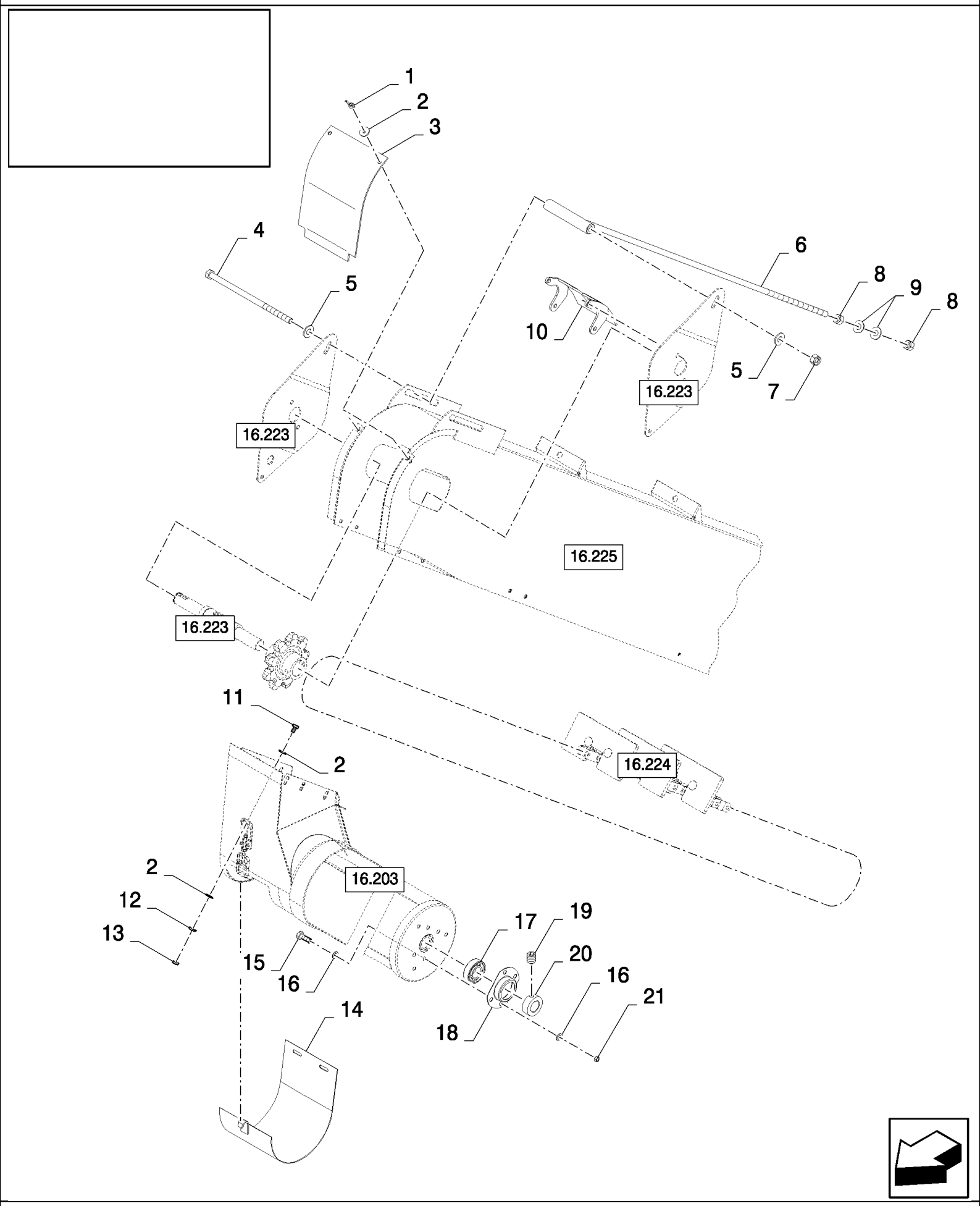

16.222(01) TAILINGS ELEVATORS

ссылка	Номер детали	Кол-во	Описание
1	84814892	2	NUT, WING, M6 x 1,
2	140040	6	WASHER, M6 x 22 x 2,
3	84980878	1	COVER,
4	380423	1	BOLT, {PP:80380423} Hex, M12 x 170, 8.8, M12x170
5	140046	2	WASHER, SPRING, Belleville, M12,
6	84982241	1	TIE-ROD, THREADED,
7	100038	1	NUT, LOCK, M12 x 1.75, Cl 8,
8	100020	2	NUT, M16, Cl 8,
9	140048	2	WASHER, SPRING, Belleville, M16,
10	84981165	1	PLATE,
11	86508568	2	BOLT, Hex, M6 x 16, 8.8,
12	322357	2	WASHER, SPRING, Belleville, M6,
13	15896221	2	NUT, M6, Cl 10,
14	84980877	1	COVER,
15	16043224	4	BOLT, Hex, M8 x 16, 8.8, Full Thd, , ASN D364
16	322358	8	WASHER, SPRING, Belleville, M8,
17	80034439	1	BEARING ASSY,
18	310045	1	FLANGE, {PP:80310045}
19	300480	1	SET SCREW, {PP:80300480} Hex Soc, M10 x 12, Cup Pt, M10x12
20	300003	1	RING, {PP:80300003}
21	89706690	4	NUT, M8, Cl 8,
15	16043224	7	BOLT, Hex, M8 x 16, 8.8, Full Thd, , BSN C363

16.223(01) TAILINGS ELEVATORS

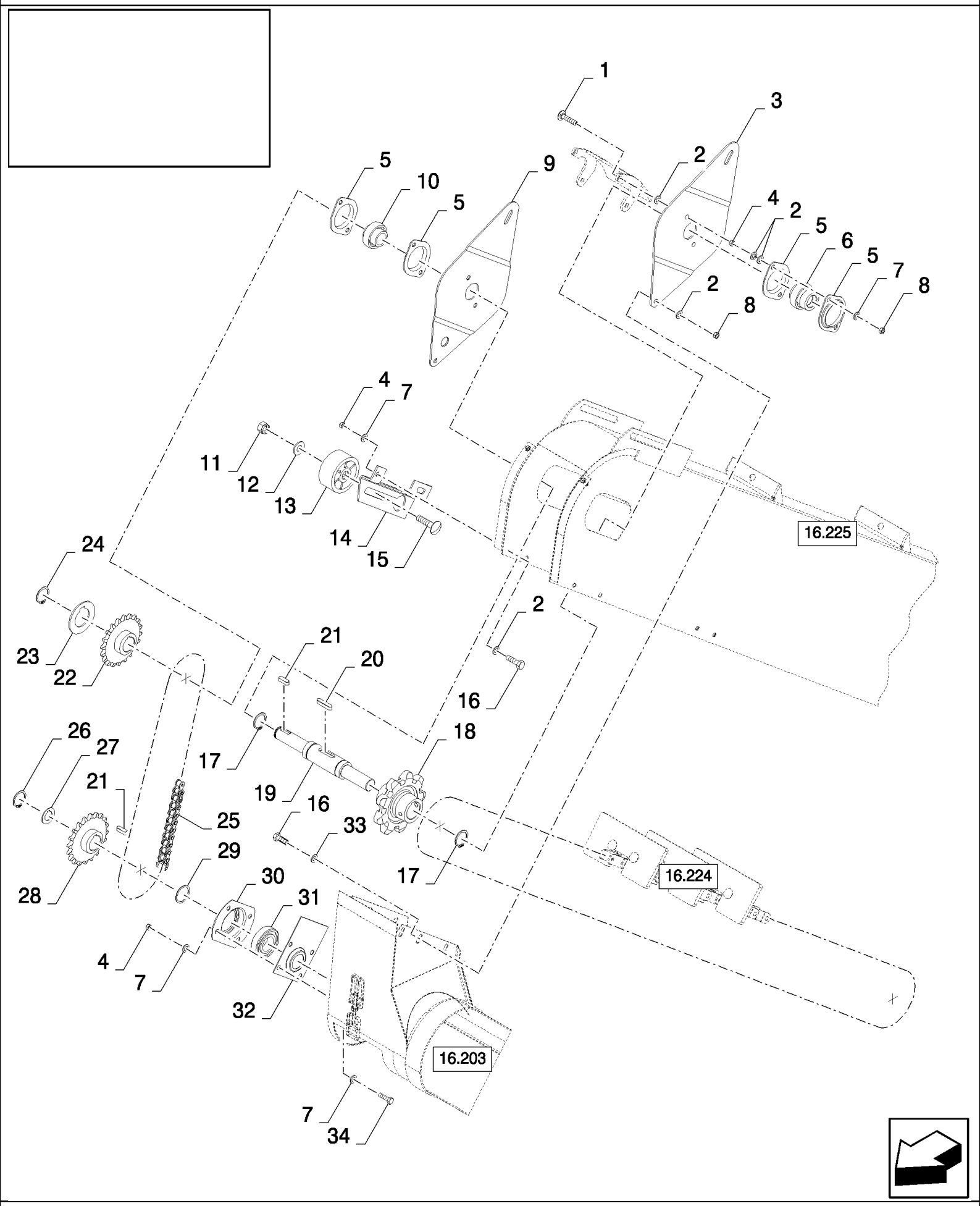

16.223(01) TAILINGS ELEVATORS

ссылка	Номер детали	Кол-во	Описание
1	86512443	4	BOLT, CARRIAGE, Short NK, M8 x 35, Cl8.8, Full Thd, M8x35
2	140016	16	WASHER, M8 x 16 x 1.6,
3	84981025	1	PLATE,
4	89706690	14	NUT, M8, Cl 8,
5	86548974	4	FLANGE,
6	84992001	1	BEARING ASSY,
7	322358	18	WASHER, SPRING, Belleville, M8,
8	86629542	4	NUT, LOCK, M8 x 1.25, Cl 8,
9	84981356	1	PLATE,
10	84992002	1	BEARING ASSY,
11	412126	1	NUT, LOCK, M12 x 1.75, Cl 8,
12	378245	1	WASHER, M12,
13	334970	1	PINION, IDLER, {PP:80334970}
14	84981208	1	SUPPORT,
15	334682	1	BOLT, CARRIAGE, Short NK, M12 x 50, Cl8.8, Full Thd,
16	43128	6	BOLT, Hex, M8 x 30, 8.8, , BSN C363
16	120104	6	BOLT, {PP:80120104} Hex, M8 x 20, 8.8, , ASN D364
17	11068376	2	RING, SNAP, M35, Ext,
18	84981028	1	SPROCKET, DRIVEN,
19	84981295	1	SHAFT,
20	354775	1	KEY, {PP:80354775}
21	170030	2	KEY, {PP:80170030} M8 x 7 x 32, Par,
22	84981212	1	SPROCKET, DRIVEN,
23	444976	AR	WASHER, {PP:80444976} 26MM
24	370002	1	RING, SNAP, {PP:80370002} M25, Ext,
25	216820	1	CHAIN, {PP:80216820}
26	370003	1	RING, SNAP, {PP:80370003} M30, Ext,
27	444974	AR	WASHER, {PP:80444974}
28	84981030	1	SPROCKET, DRIVEN,
29	140108	1	WASHER, {PP:80140108}
30	9511041	1	FLANGE, {PP:89511041}
31	210043	1	BEARING ASSY, {PP:80210043}
32	80423768	1	PLATE,
33	140017	2	WASHER, M10 x 20 x 2, , BSN C363
34	16043224	4	BOLT, Hex, M8 x 16, 8.8, Full Thd, , ASN D364
34	16043224	4	BOLT, Hex, M8 x 16, 8.8, Full Thd, , BSN C363

16.224(01) TAILINGS ELEVATORS, CHAIN

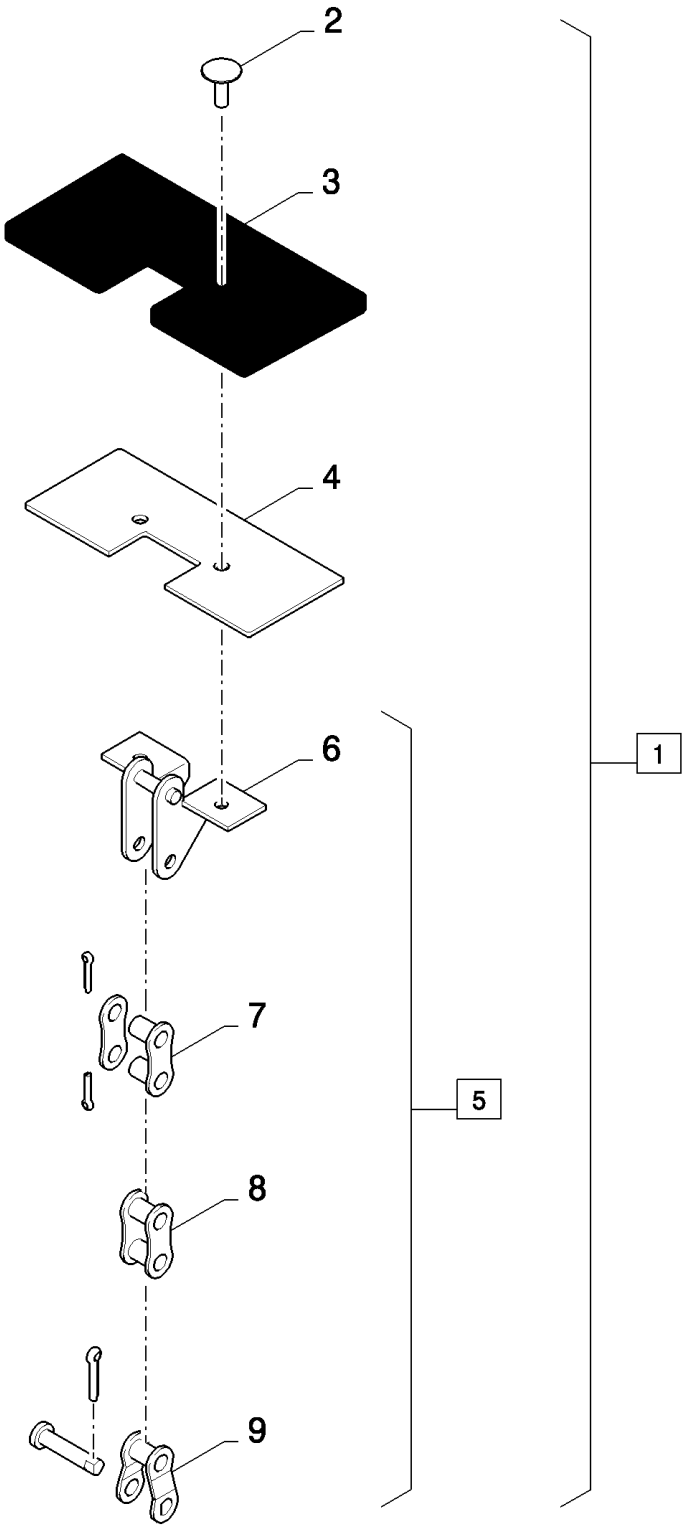

16.224(01) TAILINGS ELEVATORS, CHAIN

ссылка	Номер детали	Кол-во	Описание
1	84980082	1	CHAIN, (2 to 9)
2	NS	46	NOT SERVICED, Rivet
3	84005086	23	PAD, RUBBER,
4	84018671	23	SUPPORT,
5	84981579	1	CHAIN, (6 to 9)
6	84017435	23	LINK, CONNECTING,
7	40241	43	LINK, CONNECTING, {PP:80040241}
8	86595253	66	LINK, CHAIN,
9	40242	3	LINK, OFFSET, {PP:80040242}

16.225(01) TAILINGS ELEVATORS

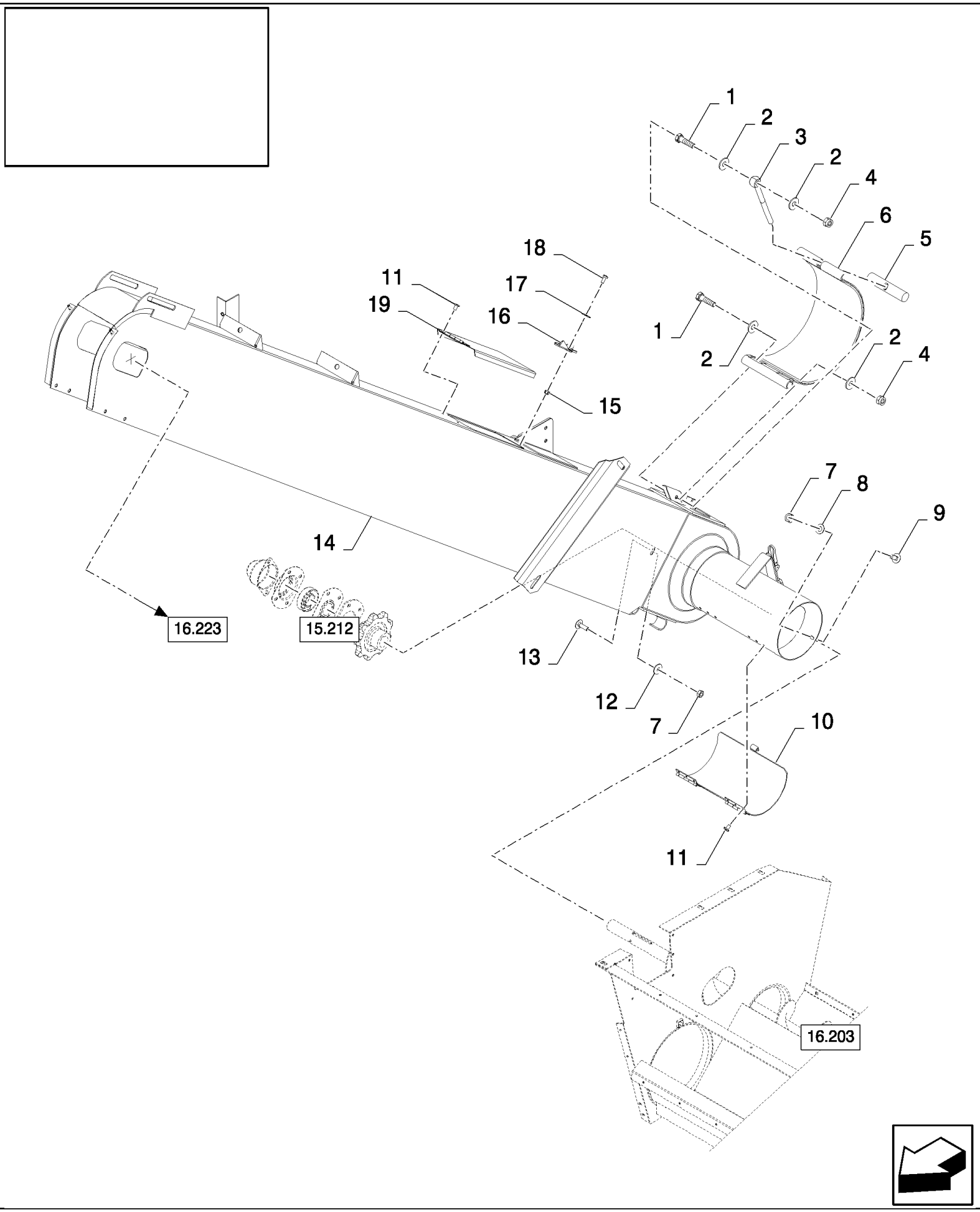

CS660 COMBINE BASE UNIT (1/03-) - Unloading

16.225(01) TAILINGS ELEVATORS

ссылка	Номер детали	Кол-во	Описание
1	43128	2	BOLT, Hex, M8 x 30, 8.8,
2	86511315	4	WASHER, M8 x 16 x 1.6,
3	9811378	1	U-BOLT, {PP:89811378}
4	86629542	2	NUT, LOCK, M8 x 1.25, Cl 8,
5	9811398	1	ROD, {PP:89811398}
6	84981227	1	COVER,
6	84982640	1	GUARD, , PERFORATED (LONG HOLES)
7	15896221	6	NUT, M6, Cl 10,
8	322357	2	WASHER, SPRING, Belleville, M6,
9	86512439	2	BOLT, CARRIAGE, Short NK, M6 x 16, Cl8.8, Full Thd,
10	84981226	1	COVER,
11	NSS	8	NOT SERVICED SEPARATELY, Rivet
12	412649	4	WASHER, SPRING, Belleville, M6,
13	9706703	4	BOLT, CARRIAGE, Short NK, M6 x 20, Cl8.8, Full Thd,
14	84981125	1	ELEVATOR, , REINFORCED
14	84980569	1	ELEVATOR, , STANDARD
15	385681	1	NUT, LOCK, {PP:80385681} M4 x .7, Cl 8, M4
16	362786	1	FASTENER, {PP:80362786}
17	362785	1	WASHER, {PP:80362785}
18	86585706	1	SCREW, Cross Pan Hd, M4 x 10,
19	84981225	1	COVER,

16.226(01) GRAINTANK EXTENSION, COVERS

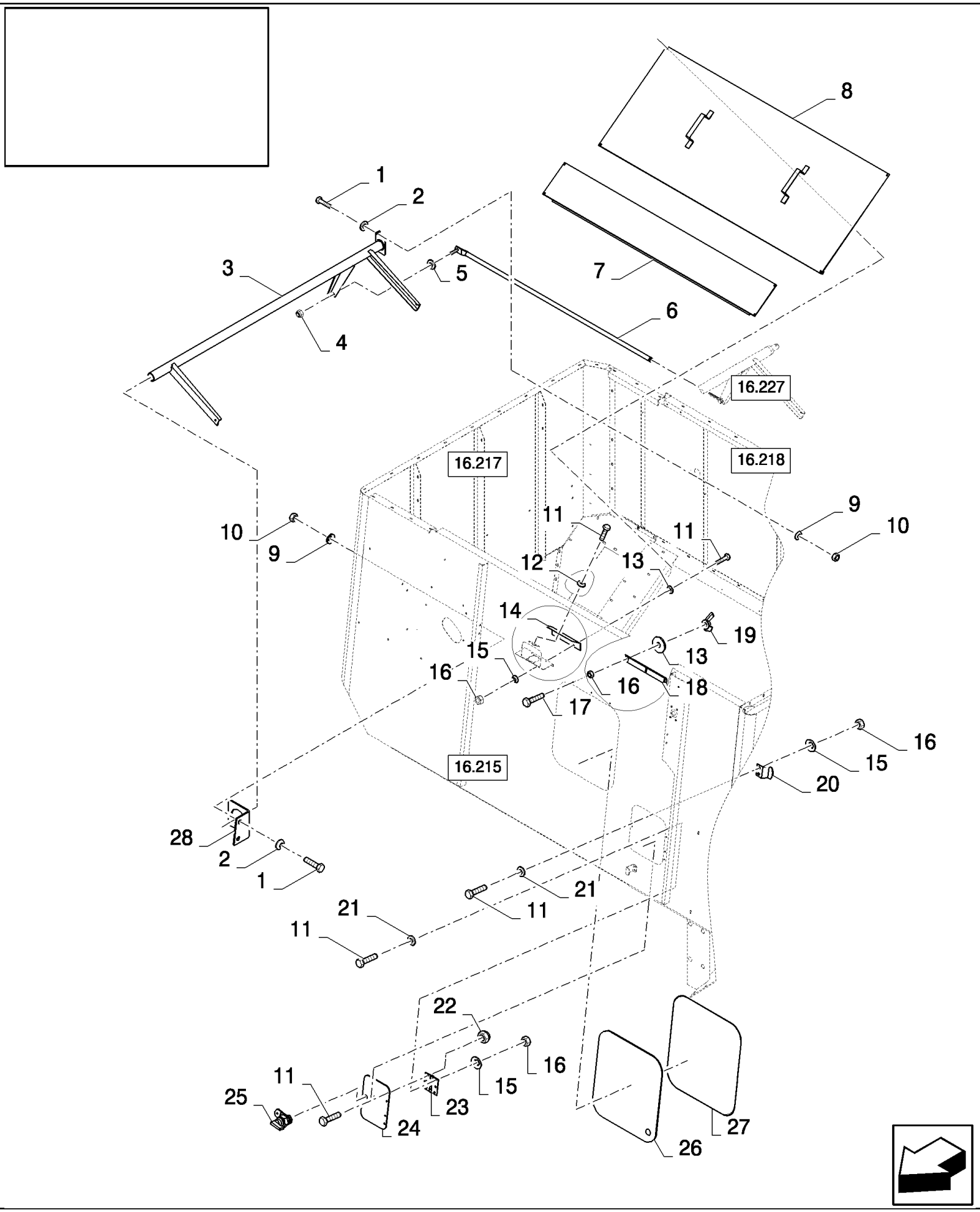

CS660 COMBINE BASE UNIT (1/03-) - Unloading

16.226(01) GRAINTANK EXTENSION, COVERS

ссылка	Номер детали	Кол-во	Описание
1	43138	6	BOLT, Hex, M10 x 20, 8.8, Full Thd,
2	140017	6	WASHER, M10 x 20 x 2,
3	84446117	1	LEVER,
4	100038	1	NUT, LOCK, M12 x 1.75, Cl 8,
5	378245	1	WASHER, M12,
6	84446174	1	ROD, ADJUSTMENT,
7	84980803	1	PLATE,
8	84980277	1	PLATE,
9	140045	6	WASHER, SPRING, Belleville, M10,
10	100016	6	NUT, M10, Cl 8,
11	86508568	13	BOLT, Hex, M6 x 16, 8.8,
12	412649	1	WASHER, SPRING, Belleville, M6,
13	140040	5	WASHER, M6 x 22 x 2,
14	84980258	1	COVER,
15	322357	8	WASHER, SPRING, Belleville, M6,
16	15896221	11	NUT, M6, Cl 10,
17	120100	3	BOLT, Hex, M6 x 20, 8.8,
18	9812263	1	BRACKET, {PP:89812263}
19	84814892	3	NUT, WING, M6 x 1,
20	84448395	1	BRACKET, , BSN C367
20	9514387	1	BRACKET, {PP:89514387} , ASN D368
21	140015	6	WASHER, {PP:80140015} 6MM
22	353308	4	NUT, LOCK, M6 x 1, Cl 8,
23	9833212	2	HINGE, {PP:89833212}
24	80825505	1	GLASS,
25	89577003	1	LOCK,
26	9500277	1	GLASS, CAB, {PP:89500277}
27	89850033	1	SEAL, L=1.8M
28	84446192	1	PLATE,

16.227(01) GRAINTANK EXTENSION, COVERS

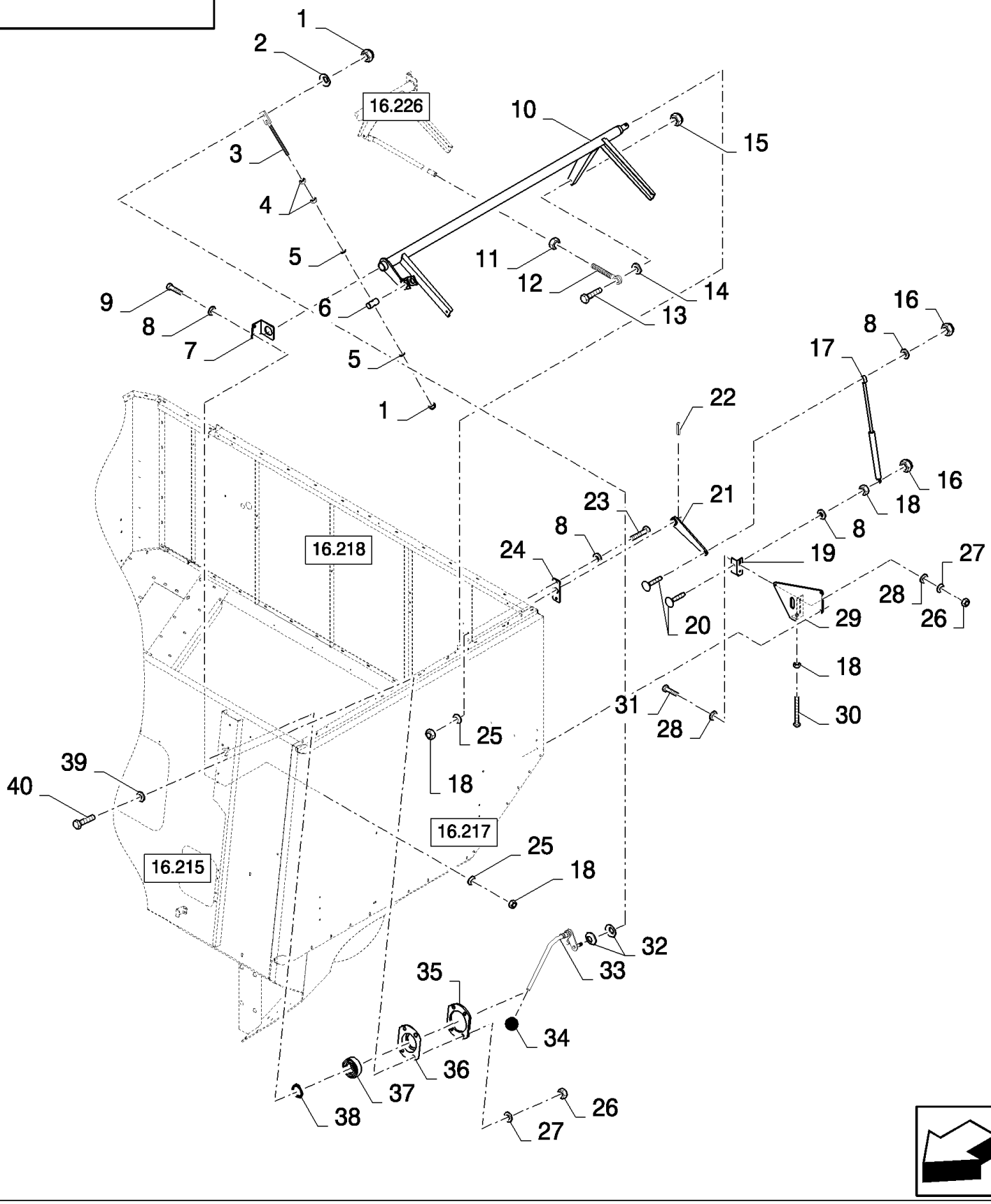

16.227(01) GRAINTANK EXTENSION, COVERS

ссылка	Номер детали	Кол-во	Описание
1	86000441	2	NUT, LOCK, M16 x 2, Cl 8,
2	140048	1	WASHER, SPRING, Belleville, M16,
3	84447692	1	ROD, CONNECTING,
4	100020	2	NUT, M16, Cl 8,
5	450869	2	WASHER, {PP:80450869}
6	84447689	1	SHAFT,
7	84447695	1	SUPPORT,
8	140017	8	WASHER, M10 x 20 x 2,
9	43138	4	BOLT, Hex, M10 x 20, 8.8, Full Thd,
10	84446194	1	LEVER,
11	9706685	1	NUT, M12, Cl 8,
12	330413	1	BOLT, BANJO, {PP:80330413}
13	9706687	1	BOLT, Hex, M12 x 30, 8.8,
14	378245	1	WASHER, M12,
15	100038	1	NUT, LOCK, M12 x 1.75, Cl 8,
16	100037	2	NUT, M10 x 1.5, Cl 8,
17	84444983	1	SPRING,
18	100016	8	NUT, M10, Cl 8,
19	84446093	1	PLATE,
20	374892	2	BOLT, CARRIAGE, Short NK, M10 x 40, Cl8.8, Full Thd,
21	84446142	1	SUPPORT,
22	80381531	1	PIN, ROLL,
23	43139	2	SCREW, {PP:80043139} M10x25
24	84446111	1	PLATE,
25	140045	6	WASHER, SPRING, Belleville, M10,
26	89706690	6	NUT, M8, Cl 8,
27	322358	6	WASHER, SPRING, Belleville, M8,
28	378243	4	WASHER, M8,
29	84448661	1	SUPPORT,
30	538885	1	BOLT, {PP:80538885} Hex, M10 x 90, 8.8, Full Thd, M10x90
31	120104	2	BOLT, Hex, M8 x 20, 8.8,
32	86589278	2	WASHER, SPRING,
33	84447693	1	HANDLE,
34	84056709	1	KNOB,
35	84447691	1	PLATE,
36	310045	1	FLANGE, {PP:80310045}
37	80034439	1	BEARING ASSY,
38	370002	1	RING, SNAP, {PP:80370002} M25, Ext,
39	140016	4	WASHER, M8 x 16 x 1.6,
40	43127	4	BOLT, Hex, M8 x 25, 8.8,

16.228(01) GRAINTANK EXTENSION, COVERS

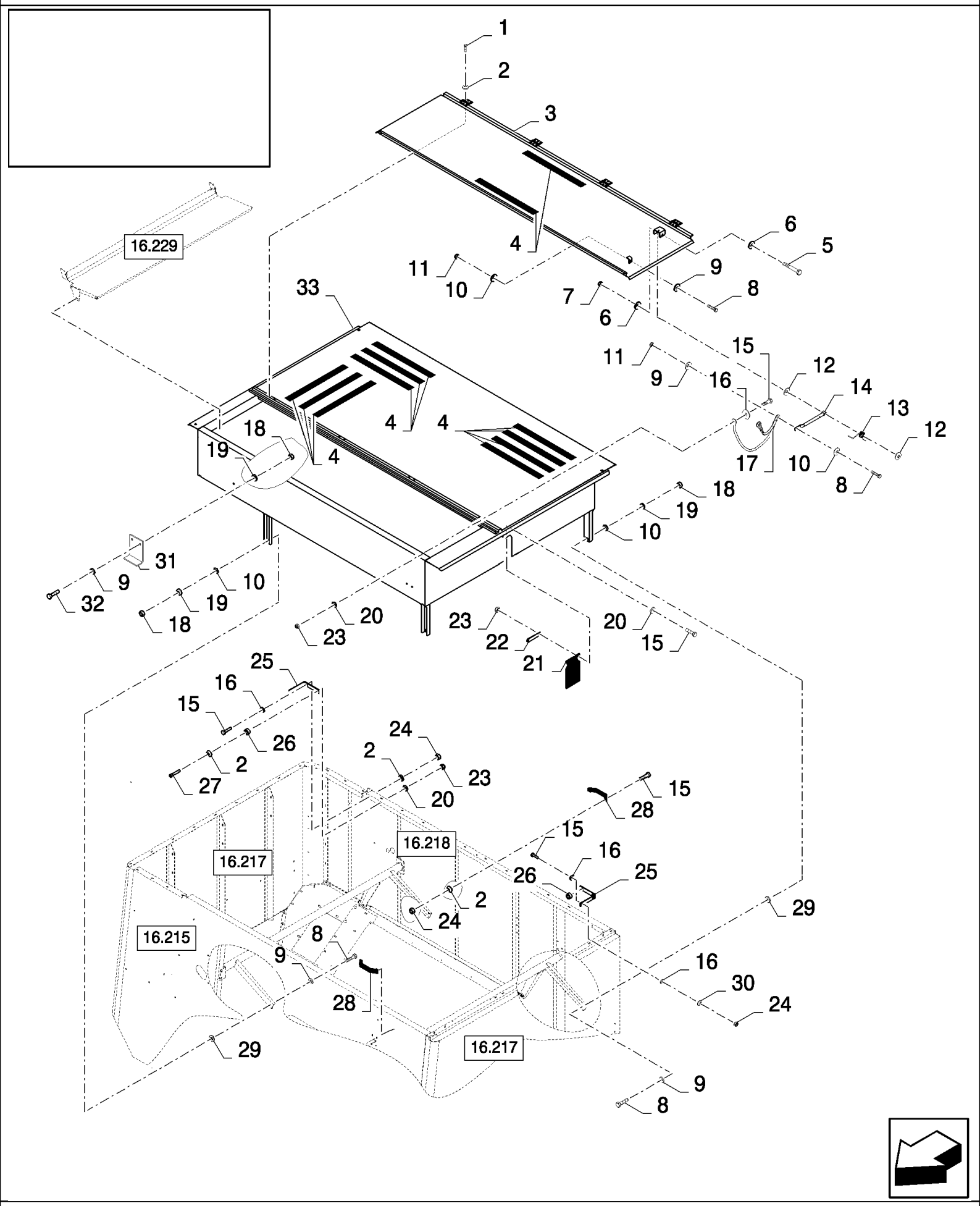

CS660 COMBINE BASE UNIT (1/03-) - Unloading

16.228(01) GRAINTANK EXTENSION, COVERS

ссылка	Номер детали	Кол-во	Описание
1	86508568	8	BOLT, Hex, M6 x 16, 8.8,
2	322357	20	WASHER, SPRING, Belleville, M6,
3	84446054	1	COVER,
4	401502	AR	STRIP, ANTI-SKID, {PP:80401502} 51mm x 18.3 Roll - Cut to Size
6	140017	2	WASHER, M10 x 20 x 2,
7	100037	1	NUT, M10 x 1.5, Cl 8,
8	43128	6	BOLT, Hex, M8 x 30, 8.8,
9	140016	12	WASHER, M8 x 16 x 1.6,
10	140041	6	WASHER, M8 x 28 x 3,
11	86629542	2	NUT, LOCK, M8 x 1.25, Cl 8,
12	140042	2	WASHER, M10 x 34 x 3,
13	84014761	1	SPRING,
14	84980941	1	LEVER,
15	120100	19	BOLT, Hex, M6 x 20, 8.8,
16	140040	21	WASHER, M6 x 22 x 2,
17	84980936	1	ROPE,
18	89706690	10	NUT, M8, Cl 8,
19	322358	10	WASHER, SPRING, Belleville, M8,
20	140015	7	WASHER, {PP:80140015} 6MM
21	84818219	1	CANVAS,
22	84818221	1	PLATE,
23	353308	7	NUT, LOCK, M6 x 1, Cl 8,
24	15896221	16	NUT, M6, Cl 10,
25	84980257	4	BRACKET,
26	84447128	4	BUSHING,
27	9832203	4	SCREW, {PP:89832203} Hex Soc Hd, M6 x 25, 8.8, M6x25
28	89837395	2	HANDLE,
29	84444956	4	BUSHING,
30	412649	8	WASHER, SPRING, Belleville, M6,
31	84446035	3	PLATE,
32	120104	6	BOLT, Hex, M8 x 20, 8.8,
33	84818208	1	COVER,
5	43144	1	BOLT, Hex, M10 x 70, 8.8,

16.229(01) GRAINTANK EXTENSION, COVERS

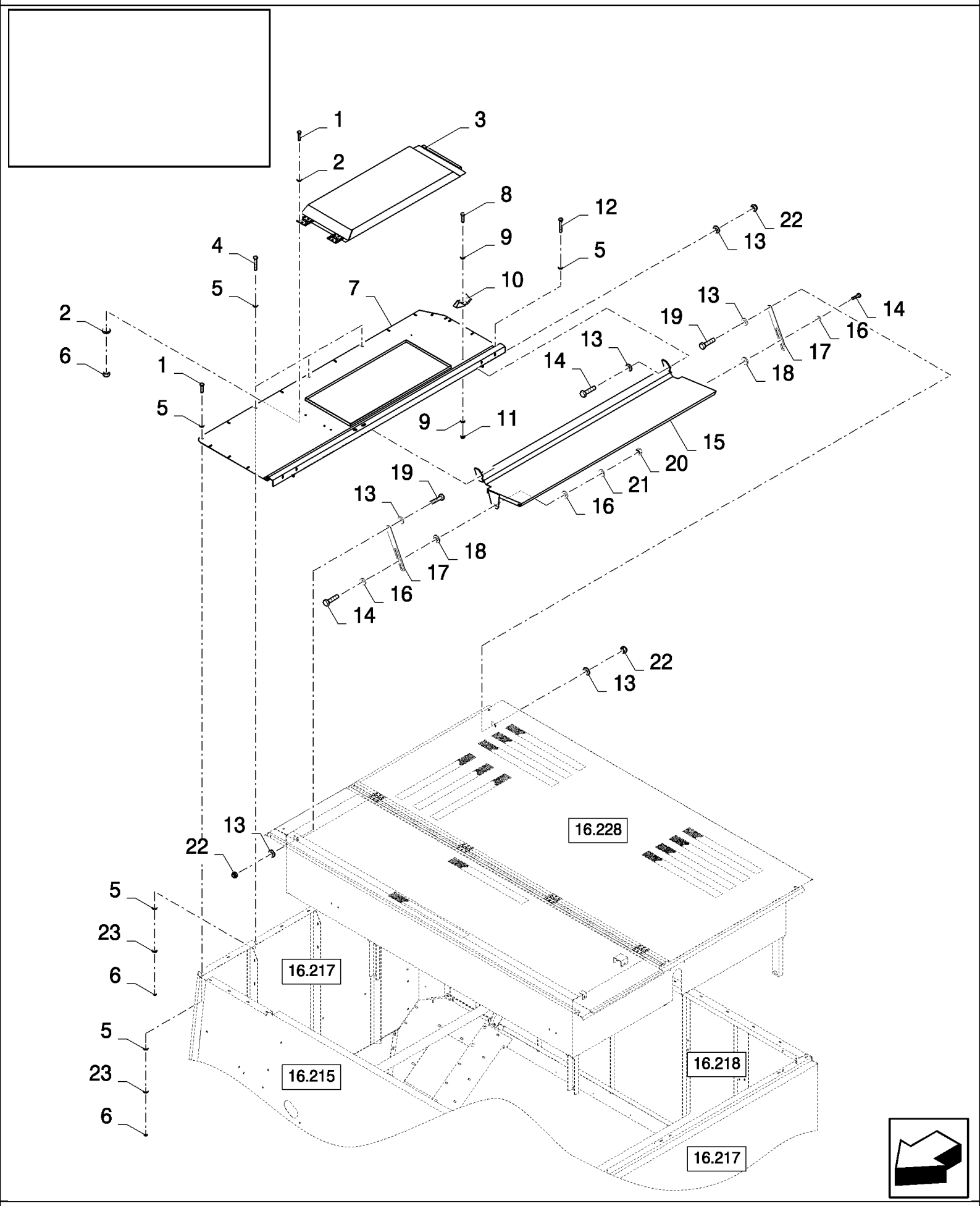

16.229(01) GRAINTANK EXTENSION, COVERS

ссылка	Номер детали	Кол-во	Описание
1	86508568	16	BOLT, Hex, M6 x 16, 8.8,
2	322357	8	WASHER, SPRING, Belleville, M6,
3	84448433	1	COVER, , BSN C487
3	87347666	1	COVER, , ASN D488
4	120102	4	BOLT, Hex, M6 x 40, 8.8, Full Thd,
5	140040	36	WASHER, M6 x 22 x 2,
6	15896221	22	NUT, M6, Cl 10,
7	84444964	1	PLATE,
8	86511042	2	SCREW, Cross Pan Hd, M4 x 16,
9	362785	4	WASHER,
10	362786	2	FASTENER,
11	385681	2	NUT, LOCK, M4 x .7, Cl 8, M4
12	120100	2	BOLT, Hex, M6 x 20, 8.8,
13	140016	8	WASHER, M8 x 16 x 1.6,
14	43128	4	BOLT, Hex, M8 x 30, 8.8,
15	84446011	1	COVER,
16	140041	4	WASHER, M8 x 28 x 3,
17	84982346	2	PLATE,
18	84444956	2	BUSHING,
19	120104	2	BOLT, Hex, M8 x 20, 8.8,
20	89706690	2	NUT, M8, Cl 8,
21	322358	2	WASHER, SPRING, Belleville, M8,
22	86629542	4	NUT, LOCK, M8 x 1.25, Cl 8,
23	412649	18	WASHER, SPRING, Belleville, M6,

ACCESSORIES	**ACCESSOIRES**	**ACCESORIOS**	**TILBEHØR**
ACCESSORI	**ZUBEHÖR**	**ACESSORIOS**	**TOEBEHOREN**

SEC. 18

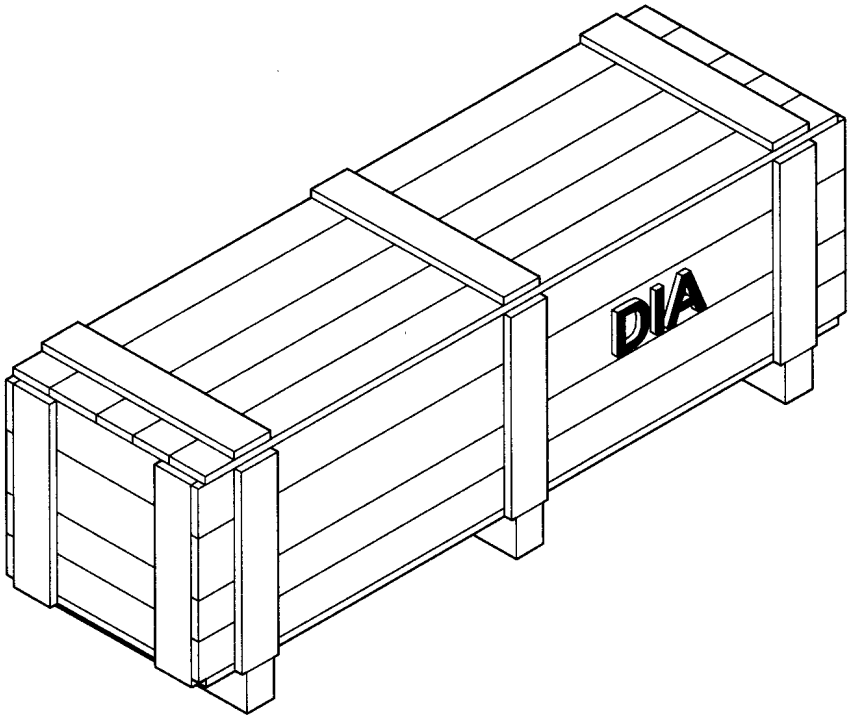

сылка	Номер детали	Кол-во	Описание

18.84040958(01) DRUM SPEED REDUCTION KIT

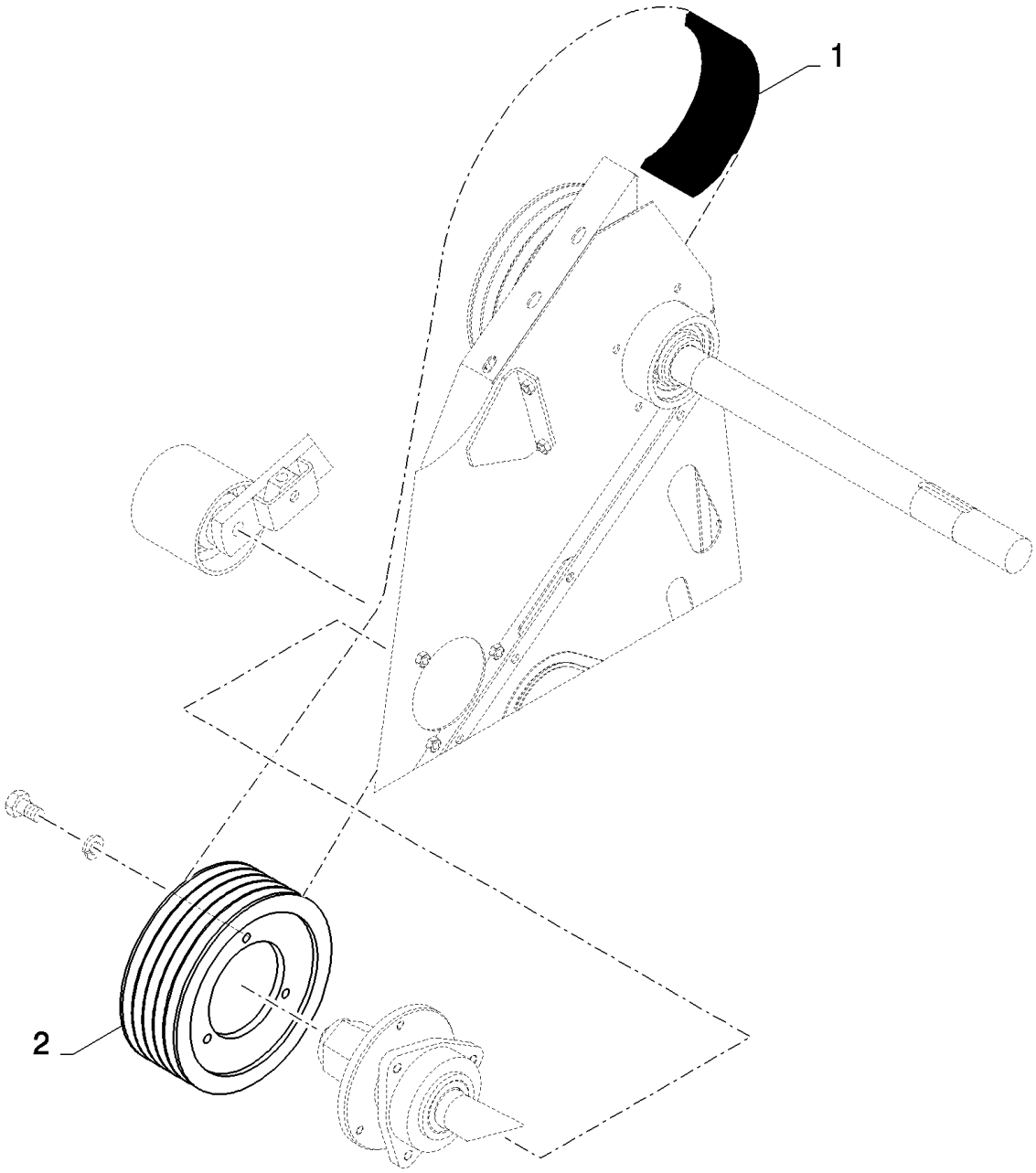

18.84040958(01) DRUM SPEED REDUCTION KIT

ссылка	Номер детали	Кол-во	Описание
	84040958		DIA KIT, HARVESTER,
1	84072815	1	BELT, TRANSMISSION,
2	84334120	1	PULLEY,

18.84040960(01) LOW RPM FAN VARIATOR

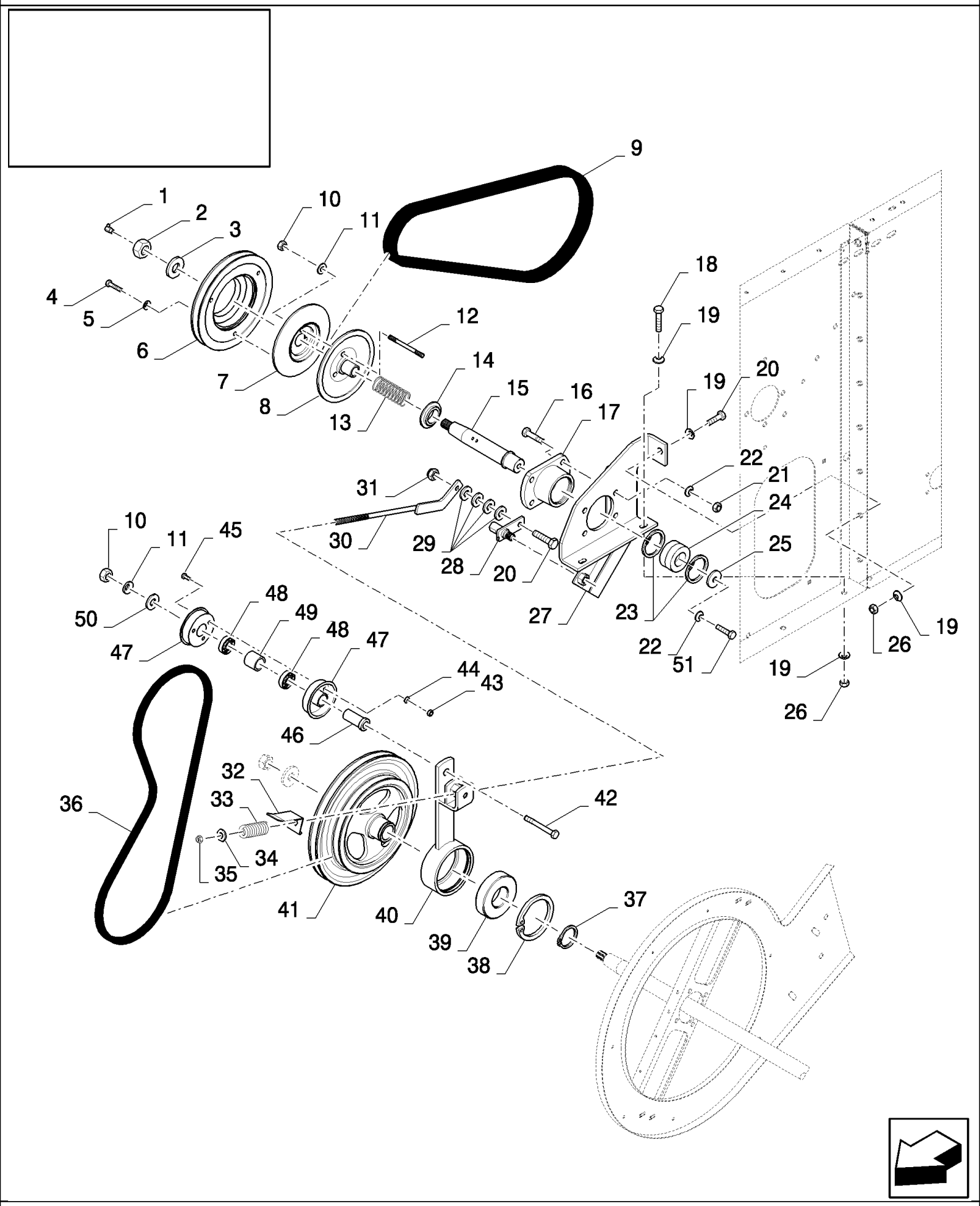

18.84040960(01) LOW RPM FAN VARIATOR

ссылка	Номер детали	Кол-во	Описание
	84040960		DIA KIT, HARVESTER,
1	323713	1	NIPPLE, LUBE, {PP:80323713}
2	100085	1	NUT, M20 x 1.5, Cl 8,
3	86592703	1	WASHER, M20 x 50 x 6, HT,
4	43127	3	BOLT, Hex, M8 x 25, 8.8,
5	322358	3	WASHER, SPRING, Belleville, M8,
6	84452186	1	PULLEY,
7	84452219	1	HALF-PULLEY,
8	84334072	1	PULLEY,
9	84452153	1	BELT,
10	100020	4	NUT, M16, Cl 8,
11	140048	4	WASHER, SPRING, Belleville, M16,
12	110055	3	STUD, {PP:80110055}
13	334054	1	SPRING, {PP:80334054}
14	84452294	1	RING,
15	84452136	1	SPINDLE,
16	300389	4	BOLT, Hex, M12 x 35, 8.8, Full Thd,
17	84452245	1	HOUSING, BEARING,
18	120112	2	BOLT, Hex, M10 x 40, 8.8, Full Thd,
19	140045	6	WASHER, SPRING, Belleville, M10,
20	9706704	2	BOLT, Hex, M10 x 35, 8.8, Full Thd,
21	9706685	4	NUT, M12, Cl 8,
22	140046	5	WASHER, SPRING, Belleville, M12,
23	80300649	2	
24	84452155	1	BEARING ASSY,
25	80395606	1	WASHER,
26	100016	3	NUT, M10, Cl 8,
27	84452384	1	SUPPORT,
28	84431514	1	HINGE,
29	378244	AR	WASHER, M10,
30	84452387	1	TIE-ROD,
31	100037	1	NUT, M10 x 1.5, Cl 8,
32	84452396	1	INDICATOR,
33	440651	1	SPRING, {PP:80440651}
34	378245	1	WASHER, M12,
35	412126	1	NUT, LOCK, M12 x 1.75, Cl 8,
36	84452112	1	BELT,
37	80370008	1	RING, SNAP,
38	301652	1	RING, SNAP, {PP:80301652} M110, Int,
39	388069	1	BEARING ASSY, {PP:80388069}
40	84452357	1	LEVER, IDLER,
41	84452194	1	PULLEY,
42	374889	1	BOLT, Hex, M16 x 100, 8.8,
43	15896221	3	NUT, M6, Cl 10,
44	322357	3	WASHER, SPRING, Belleville, M6,

18.84040960(01) LOW RPM FAN VARIATOR

ссылка	Номер детали	Кол-во	Описание
45	86508568	3	BOLT, Hex, M6 x 16, 8.8,
46	427248	1	BUSHING, {PP:80427248}
47	84441735	2	HALF-PULLEY,
48	443898	2	BEARING, BALL, {PP:80443898}
49	430235	1	BUSHING, {PP:80430235}
50	140093	1	WASHER, {PP:80140093}
51	300388	1	BOLT, Hex, M12 x 25, 8.8,
	80400970	0.025	GREAS

18.84050434(01) SUITCASE WEIGHTS - SET OF 6 WEIGHTS

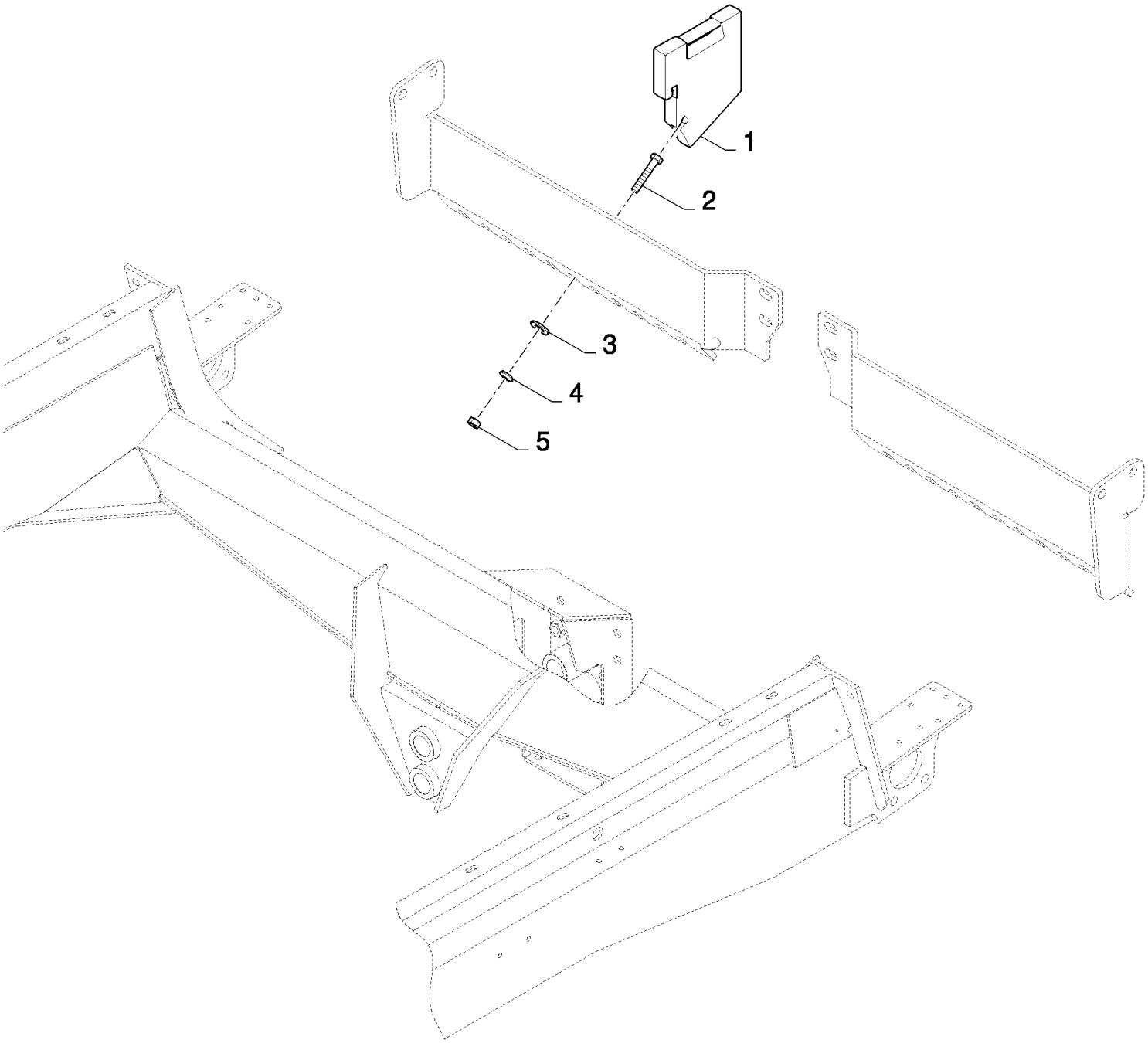

18.84050434(01) SUITCASE WEIGHTS - SET OF 6 WEIGHTS

ссылка	Номер детали	Кол-во	Описание
	84050434		DIA KIT, HARVESTER,
1	84435924	6	WEIGHT, ADVANCE DEVICE,
2	120092	6	BOLT, Hex, M16 x 70, 8.8,
3	451743	6	WASHER, {PP:80451743}
4	140048	6	WASHER, SPRING, Belleville, M16,
5	100020	6	NUT, M16, Cl 8,

18.84050562(01) GRAINHEADER ROAD LIGHT KIT

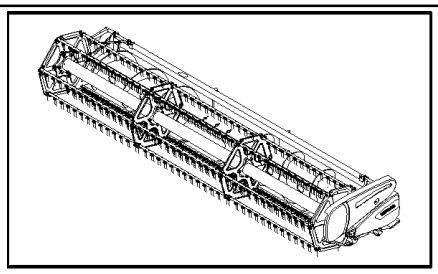

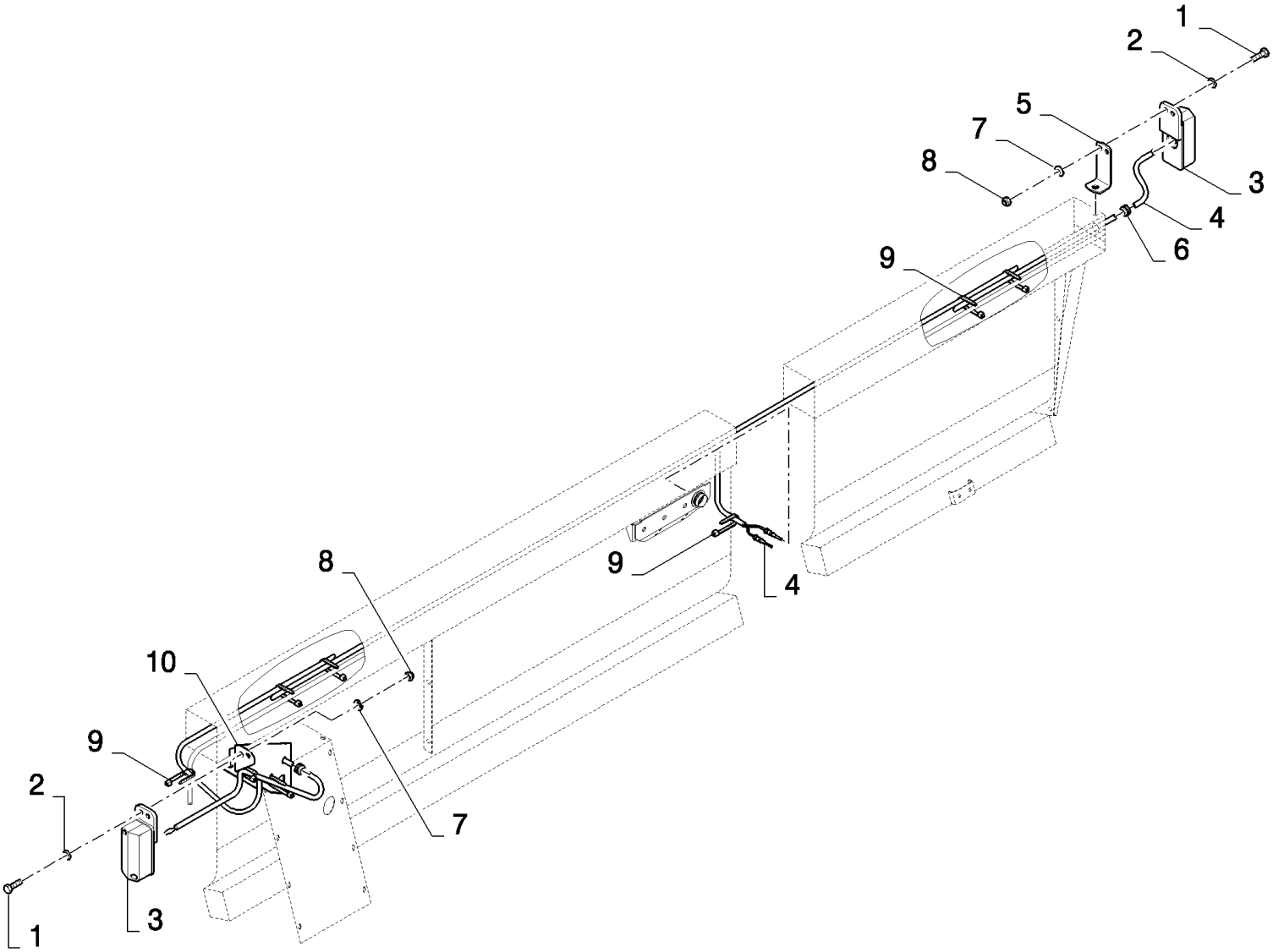

CS660 COMBINE BASE UNIT (1/03-) - Accessories

18.84050562(01) GRAINHEADER ROAD LIGHT KIT

ссылка	Номер детали	Кол-во	Описание
	84050562		DIA KIT, HARVESTER,
1	120100	4	BOLT, Hex, M6 x 20, 8.8,
2	140015	4	WASHER, {PP:80140015} 6MM
3	449531	2	LAMP, {PP:80449531}
4	84432334	1	HARNESS, WIRE,
5	84077733	1	BRACKET,
6	335315	2	GROMMET, {PP:80335315}
7	322357	4	WASHER, SPRING, Belleville, M6,
8	353308	4	NUT, LOCK, M6 x 1, Cl 8,
9	86566989	9	STRAP, CABLE,
10	84432804	1	SUPPORT,

18.84070039(01) ROTARY SEPARATOR WEAR PLATES

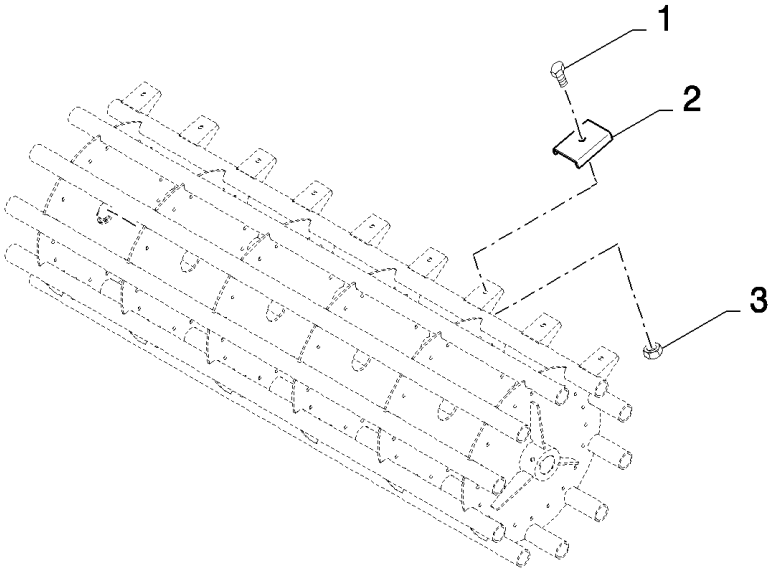

CS660 COMBINE BASE UNIT (1/03-) - Accessories

18.84070039(01) ROTARY SEPARATOR WEAR PLATES

ссылка	Номер детали	Кол-во	Описание
	84070039		DIA KIT, HARVESTER,
1	V43471	85	BOLT, M10x20
2	9510423	85	PLATE, SKID, {PP:89510423}
3	100037	85	NUT, M10 x 1.5, Cl 8,

18.84079002(01) ROTARY DUST SCREEN BRUSH

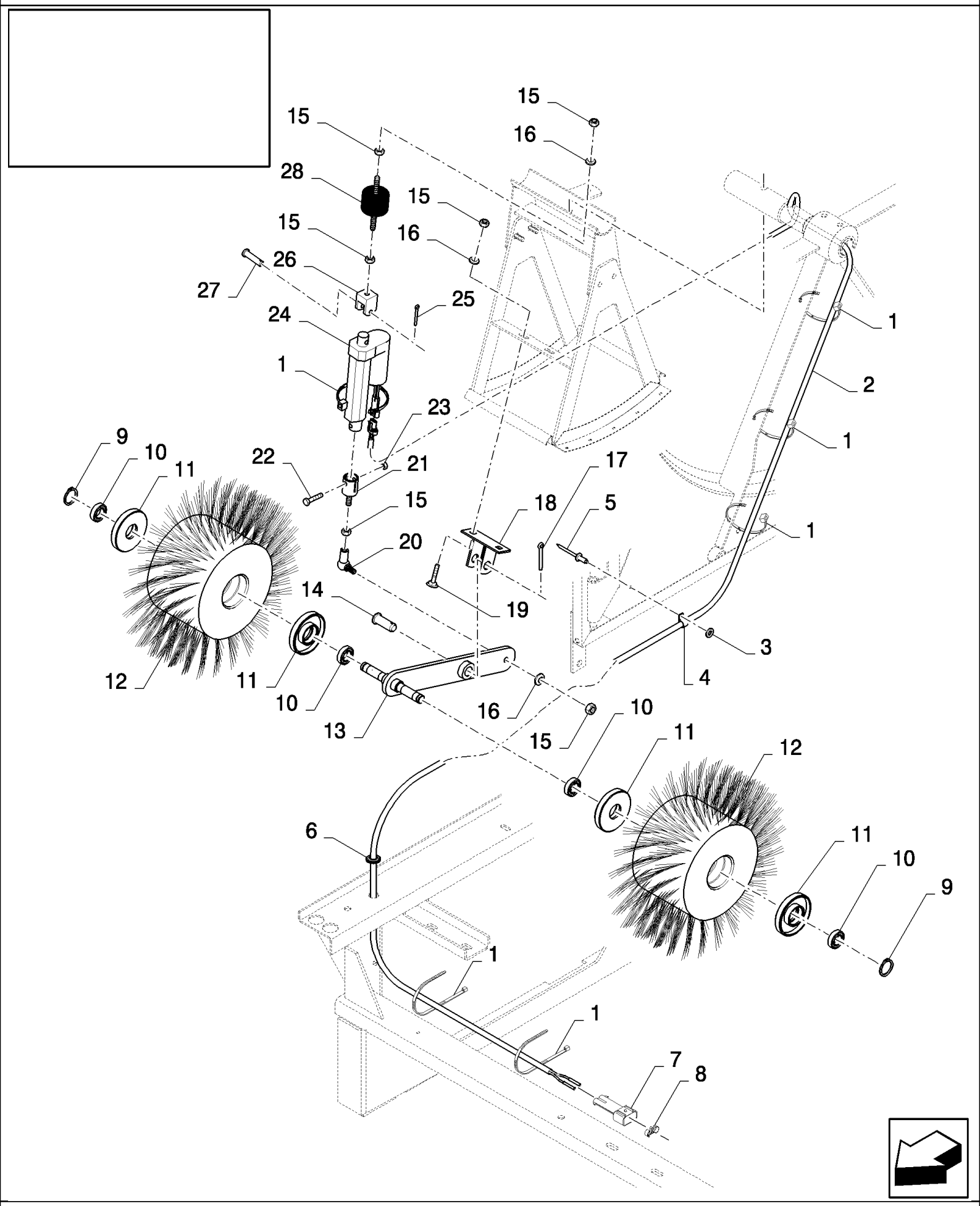

CS660 COMBINE BASE UNIT (1/03-) - Accessories

18.84079002(01) ROTARY DUST SCREEN BRUSH

ссылка	Номер детали	Кол-во	Описание
	84079002		ROTARY DUST SCREEN,
1	86566989	6	STRAP, CABLE,
2	84437301	1	HARNESS, WIRE,
3	9824326	1	WASHER, {PP:89824326} M5, 5MM
4	9507807	1	CLAMP, {PP:89507807}
5	9512290	1	RIVET, {PP:89512290} Rivet
6	411809	1	GROMMET, {PP:80411809}
7	84074630	1	CONNECTOR, WIRE,
8	86500166	1	PLUG,
9	301615	2	RING, SNAP, {PP:80301615}
10	9815813	4	BEARING ASSY, {PP:89815813}
11	84437302	4	HOUSING, BEARING,
12	84449076	2	BRUSH,
13	84449090	1	LEVER,
14	84072127	1	PIN,
15	89706690	7	NUT, M8, Cl 8,
16	322358	4	WASHER, SPRING, Belleville, M8,
17	130007	1	PIN, SPLIT (COTTER), {PP:80130007} M4 x 25,
18	84071754	1	SUPPORT,
19	86507486	2	BOLT, CARRIAGE, Short NK, M8 x 20, Cl8.8, Full Thd,
20	412439	1	BALL JOINT, {PP:80412439}
21	84071712	1	CLEVIS,
22	86977789	1	BOLT, Hex, M6 x 35, 8.8,
23	353308	1	NUT, LOCK, M6 x 1, Cl 8,
24	84440048	1	ACTUATOR,
25	86977785	1	PIN, SPLIT (COTTER), M1.6 x 20,
26	84026054	1	SUPPORT,
27	376876	1	PIN, CLEVIS, {PP:80376876} M6 x 30,
28	393802	1	SHOCK ABSORBER, {PP:80393802}
	80400981	0.05	

18.84079053(01) SUITCASE WEIGHTS SUPPORT FRAME

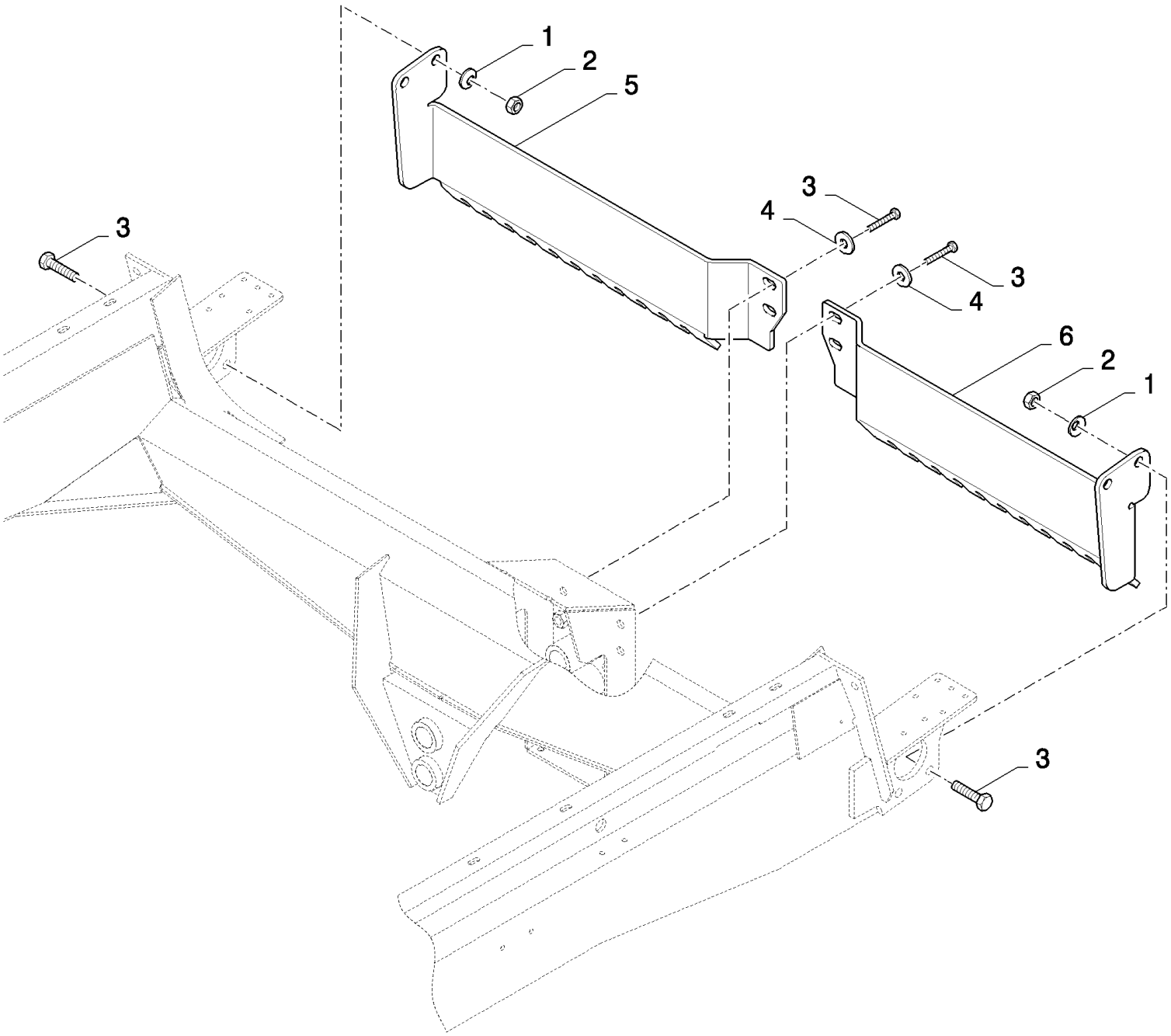

18.84079053(01) SUITCASE WEIGHTS SUPPORT FRAME

ссылка	Номер детали	Кол-во	Описание
	84079053		DIA KIT, HARVESTER,
1	140048	4	WASHER, SPRING, Belleville, M16,
2	100020	4	NUT, M16, Cl 8,
3	385922	8	BOLT, {PP:80385922} Hex, M16 x 45, 8.8, Hex, M16 x 45, 8.8
4	394631	4	WASHER, {PP:80394631} 17MM
5	84438689	1	SUPPORT,
6	84437767	1	SUPPORT,

18.84079152(01) STRAW DEFLECTOR

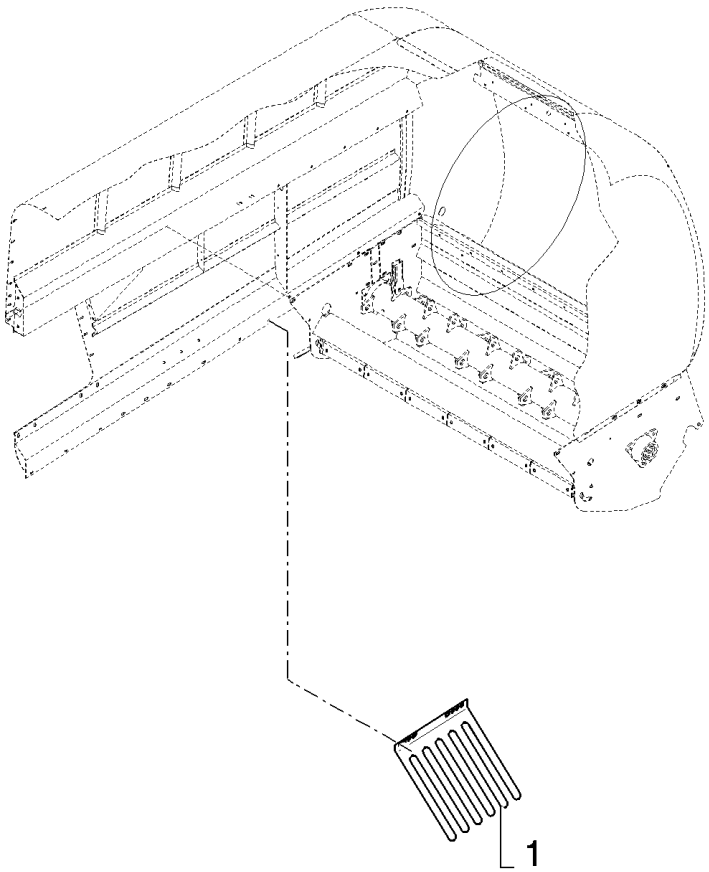

18.84079152(01) STRAW DEFLECTOR

ссылка	Номер детали	Кол-во	Описание
	84079152		DIA KIT, HARVESTER,
1	84448617	2	RAKE,

18.84081346(01) RICE PINS

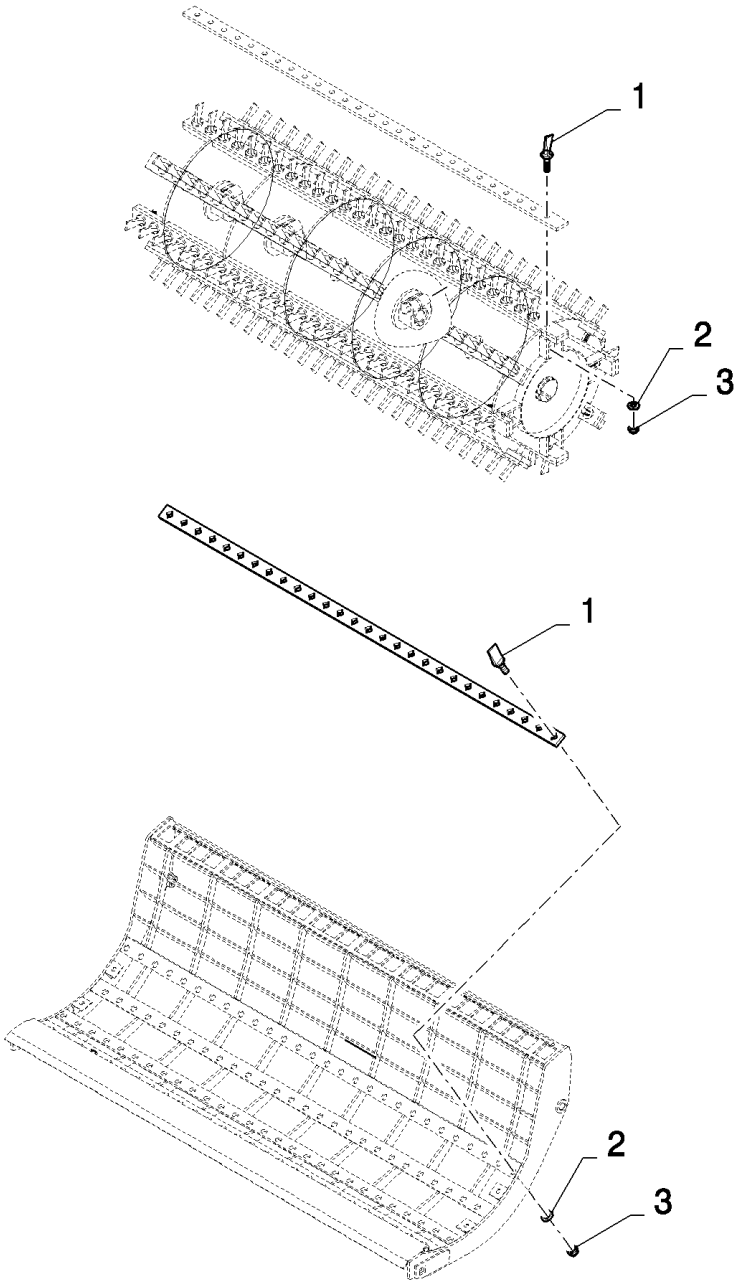

18.84081346(01) RICE PINS

ссылка	Номер детали	Кол-во	Описание
	84081346		DIA KIT, HARVESTER,
1	396935	25	TOOTH, RICE, {PP:80396935}
2	394631	25	WASHER, {PP:80394631} 16MM
3	86000441	25	NUT, LOCK, M16 x 2, Cl 8,

CS660 COMBINE BASE UNIT (1/03-) - Accessories

18.84081382(01) SUITCASE WEIGHTS - SET OF 12 WEIGHTS

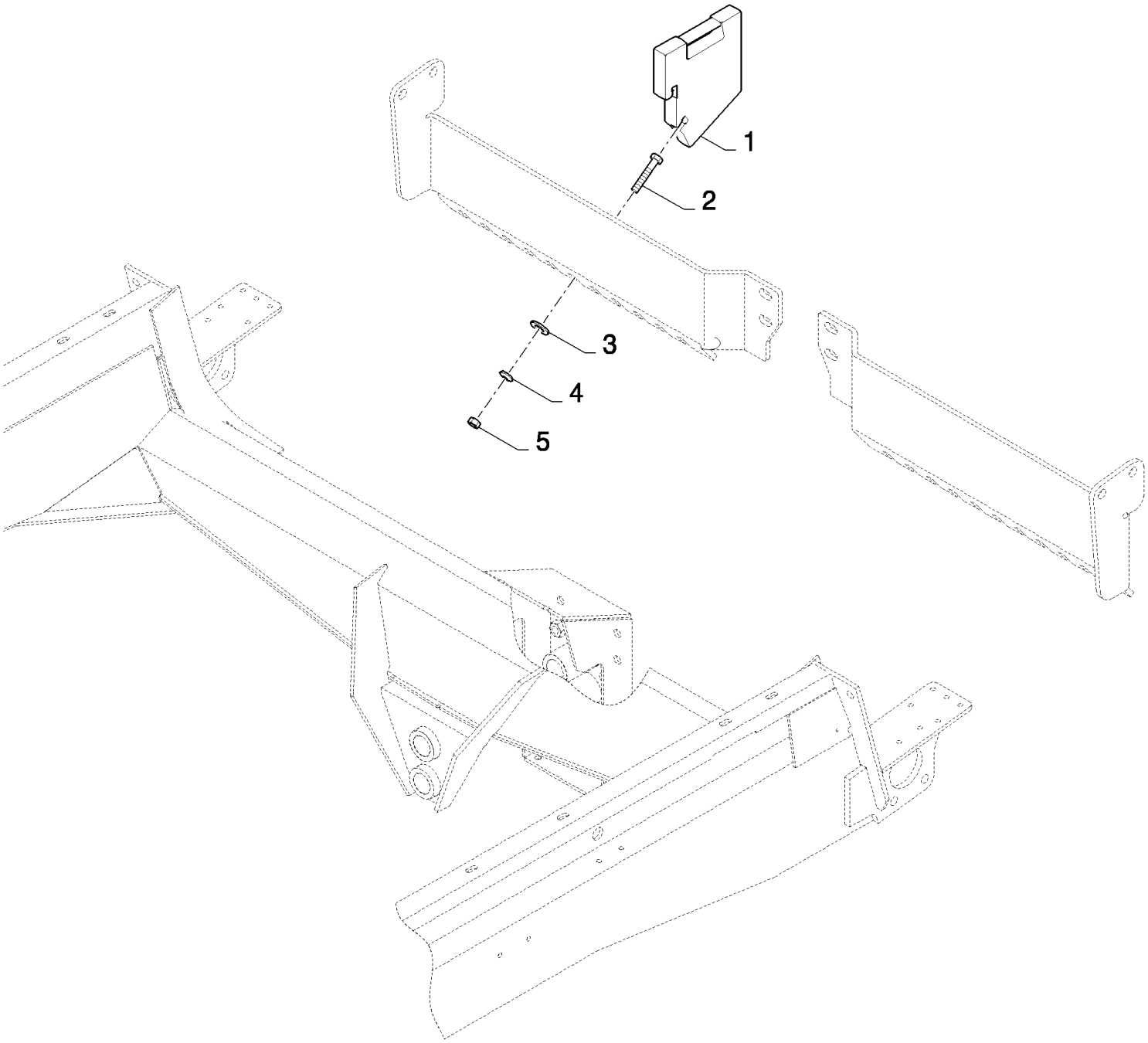

18.84081382(01) SUITCASE WEIGHTS - SET OF 12 WEIGHTS

ссылка	Номер детали	Кол-во	Описание
	84081382		DIA KIT, HARVESTER,
1	84435924	12	WEIGHT, ADVANCE DEVICE,
2	120092	12	BOLT, Hex, M16 x 70, 8.8,
3	451743	12	WASHER, {PP:80451743}
4	140048	12	WASHER, SPRING, Belleville, M16,
5	100020	12	NUT, M16, Cl 8,

CS660 COMBINE BASE UNIT (1/03-) - Accessories

18.84081383(01) SUITCASE WEIGHTS - SET OF 10 WEIGHTS

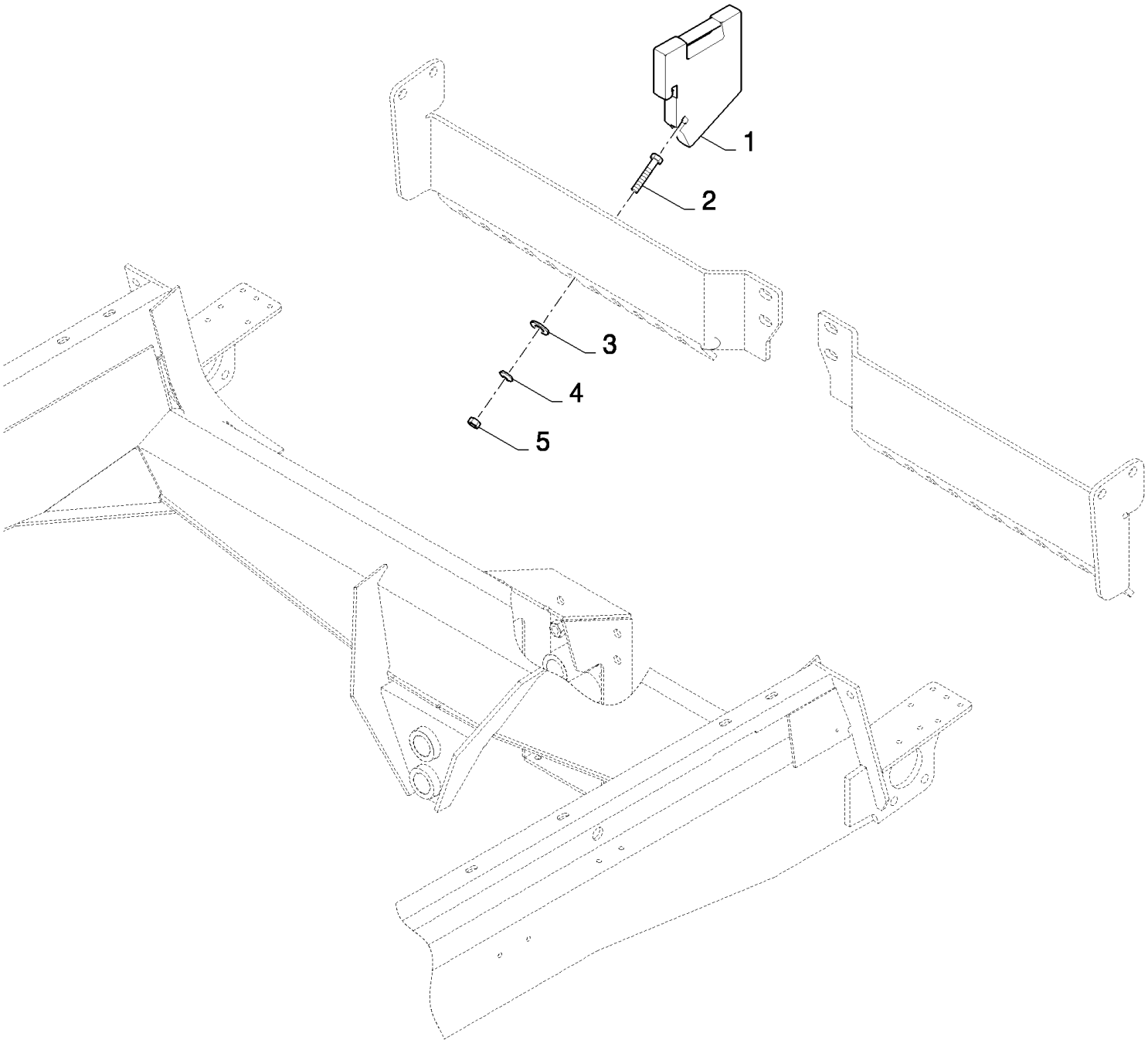

18.84081383(01) SUITCASE WEIGHTS - SET OF 10 WEIGHTS

ссылка	Номер детали	Кол-во	Описание
	84081383		DIA KIT, HARVESTER,
1	84435924	10	WEIGHT, ADVANCE DEVICE,
2	120092	10	BOLT, Hex, M16 x 70, 8.8,
3	451743	10	WASHER, {PP:80451743}
4	140048	10	WASHER, SPRING, Belleville, M16,
5	100020	10	NUT, M16, Cl 8,

18.84085573(01) BEATER PINS

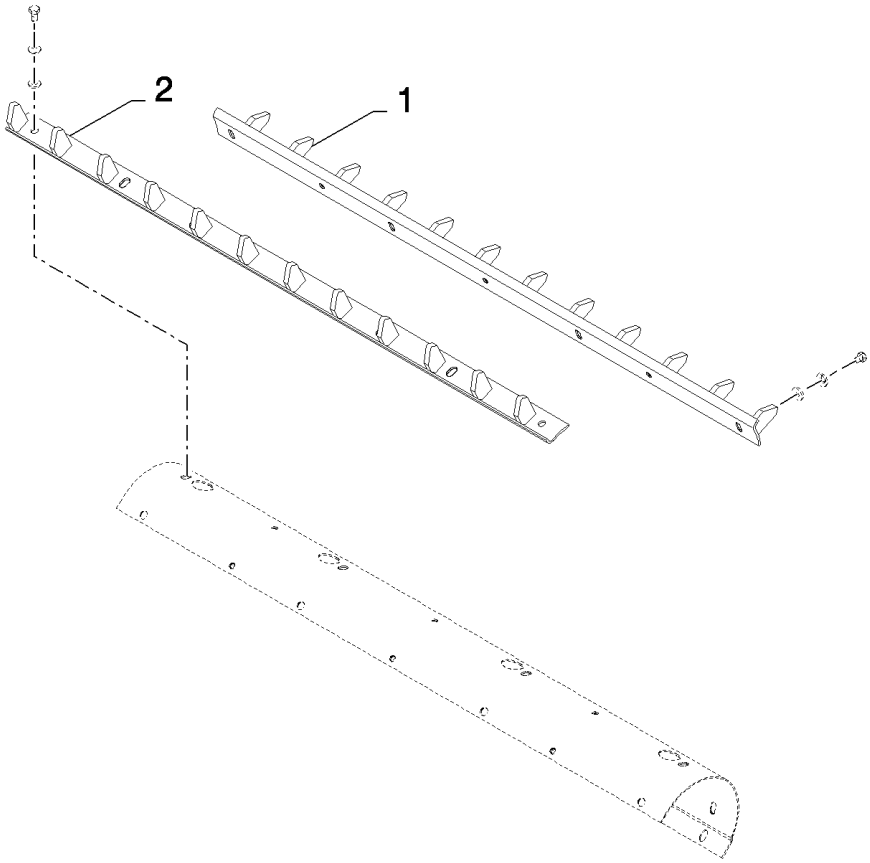

18.84085573(01) BEATER PINS

ссылка	Номер детали	Кол-во	Описание
	84085573		DIA KIT, HARVESTER,
1	84435899	2	RACK,
2	84435903	2	RACK,

18.84085582(01) FAN BOTTOM SHIELD

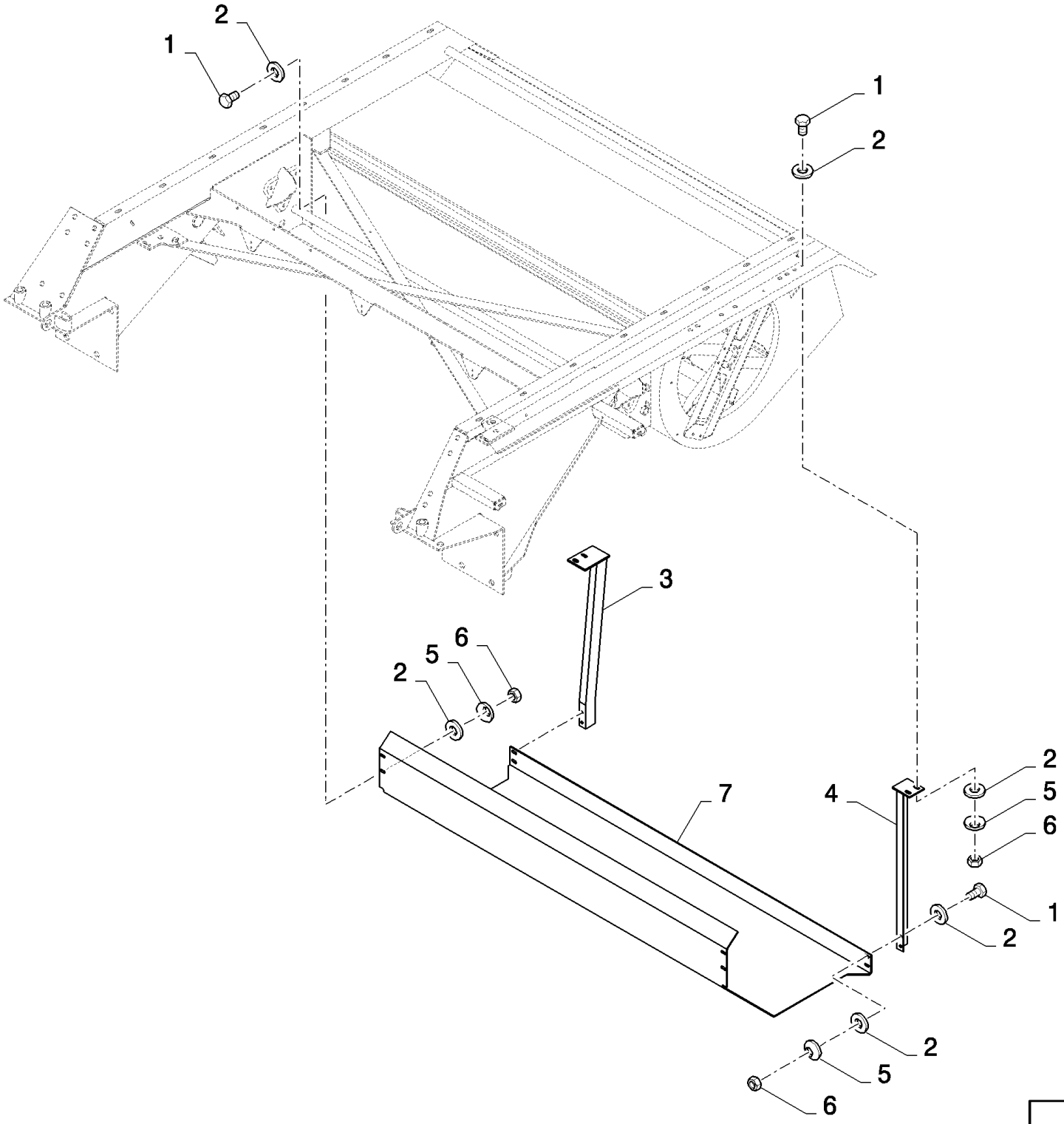

18.84085582(01) FAN BOTTOM SHIELD

ссылка	Номер детали	Кол-во	Описание
	84085582		FAN BOTTOM SHIELD,
1	43127	12	BOLT, {PP:80043127} Hex, M8 x 25, 8.8,
2	378243	24	WASHER, M8,
3	80424732	1	SUPPORT,
4	80424728	1	SUPPORT,
5	322358	12	WASHER, SPRING, Belleville, M8,
6	89706690	12	NUT, M8, Cl 8,
7	84432609	1	PLATE,

CS660 COMBINE BASE UNIT (1/03-) - Accessories

18.84085584(01) ROUND HOLE SIEVE - 16 MM

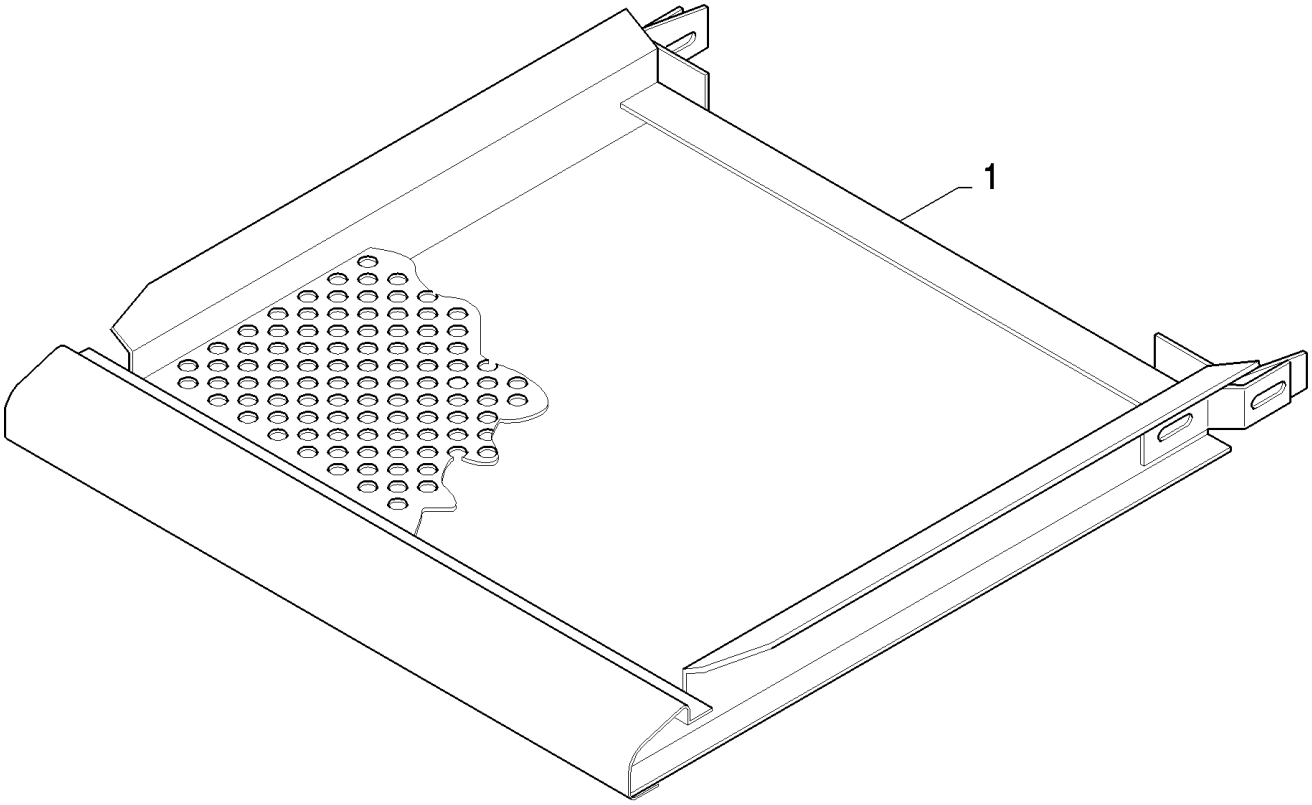

CS660 COMBINE BASE UNIT (1/03-) - Accessories

18.84085584(01) ROUND HOLE SIEVE - 16 MM

ссылка	Номер детали	Кол-во	Описание
	84085584		DIA KIT, HARVESTER,
1	390370	1	

CS660 COMBINE BASE UNIT (1/03-) - Accessories

18.84085586(01) ROUND HOLE SIEVE - 18 MM

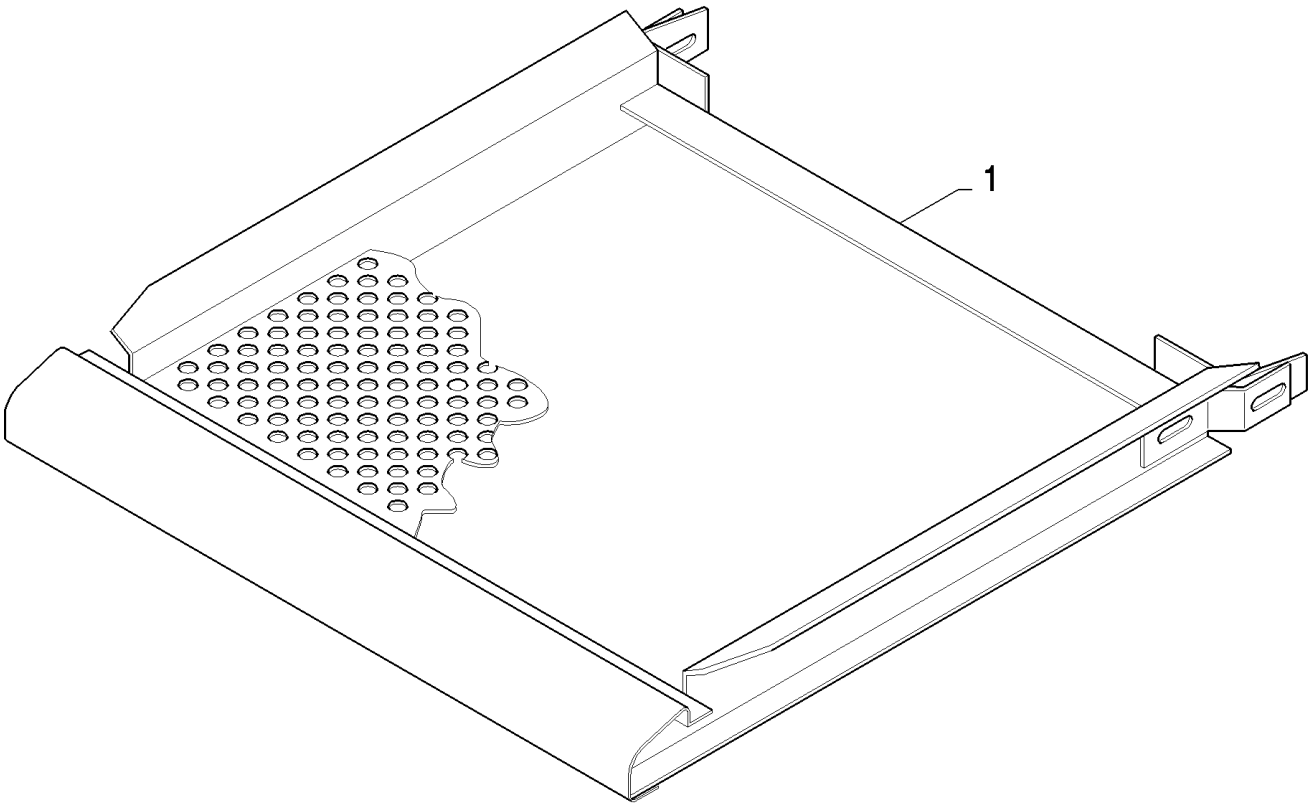

18.84085586(01) ROUND HOLE SIEVE - 18 MM

ссылка	Номер детали	Кол-во	Описание
	84085586		DIA KIT, HARVESTER,
1	390371	1	

18.84085590(01) UPPER SIEVE HART CARTER 1 1/8" - SELF LEVELLING SHOE

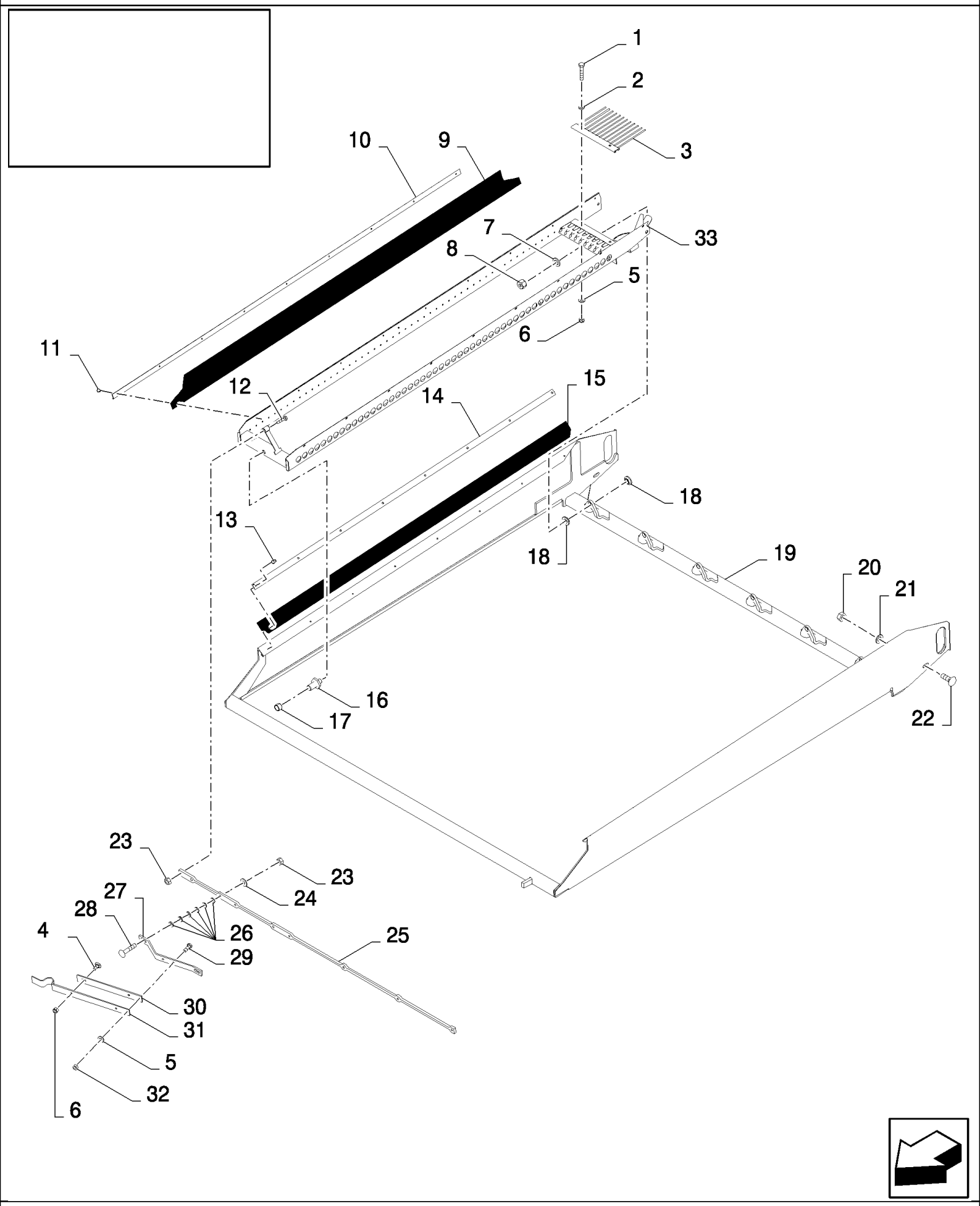

CS660 COMBINE BASE UNIT (1/03-) - Accessories

18.84085590(01) UPPER SIEVE HART CARTER 1 1/8" - SELF LEVELLING SHOE

ссылка	Номер детали	Кол-во	Описание
	84085590		DIA KIT, HARVESTER,
1	43118	12	BOLT, Hex, M6 x 40, 8.8,
2	86588450	12	WASHER, M6,
3	80919977	6	RACK,
4	86512439	1	BOLT, CARRIAGE, Short NK, M6 x 16, Cl8.8, Full Thd,
5	322357	14	WASHER, SPRING, Belleville, M6,
6	353308	13	NUT, LOCK, M6 x 1, Cl 8,
7	140017	6	WASHER, M10 x 20 x 2,
8	412141	6	NUT, LOCK, M10 x 1.5, Cl 8,
9	84436002	12	CANVAS,
10	84436103	12	PLATE, FIXING,
11	84457966	108	RIVET,
12	43129	6	BOLT, Hex, M8 x 40, 8.8,
13	455959	16	RIVET, Rivet
14	435587	2	PLATE, FIXING, {PP:80435587}
15	9502212	2	GASKET, {PP:89502212}
16	80920236	6	PIN,
17	80919875	6	RING,
18	80919958	12	SPACER,
19	84436031	1	FRAME,
20	100016	2	NUT, M10, Cl 8,
21	412655	2	WASHER, SPRING, Belleville, M10,
22	86512446	2	BOLT, CARRIAGE, Short NK, M10 x 30, Cl8.8, Full Thd,
23	89706690	8	NUT, M8, Cl 8,
24	322358	2	WASHER, SPRING, Belleville, M8,
25	84074015	1	BRACKET,
26	378243	12	WASHER, {PP:80378243} M8,
27	80919626	1	BRACKET,
28	86512444	2	BOLT, CARRIAGE, Short NK, M8 x 40, Cl8.8, Full Thd, M8x40
29	120100	2	BOLT, Hex, M6 x 20, 8.8,
30	89505278	1	SPRING,
31	89505279	1	PLATE,
32	15896221	2	NUT, M6, Cl 10,
33	84436039	6	SIEVE,
	80401159	0.006	LOCTITE
	80401624	0.006	LOCTITE

18.84085592(01) UPPER SIEVE HART CARTER 1 5/8" - SELF LEVELLING SHOE

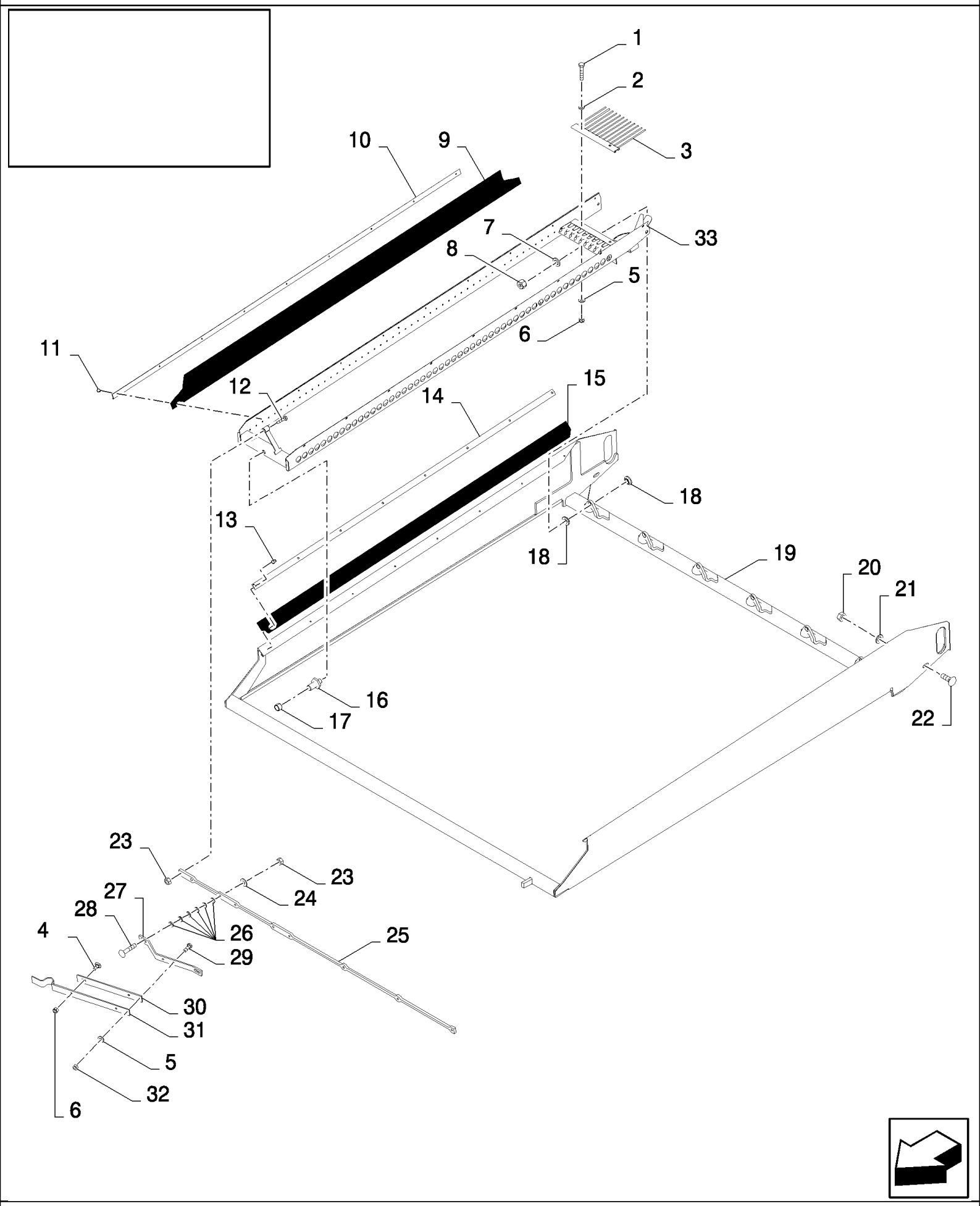

CS660 COMBINE BASE UNIT (1/03-) - Accessories

18.84085592(01) UPPER SIEVE HART CARTER 1 5/8" - SELF LEVELLING SHOE

ссылка	Номер детали	Кол-во	Описание
	84085592		DIA KIT, HARVESTER,
1	43118	12	BOLT, Hex, M6 x 40, 8.8,
2	86588450	12	WASHER, M6,
3	80922395	6	SIEVE,
4	86512439	1	BOLT, CARRIAGE, Short NK, M6 x 16, Cl8.8, Full Thd,
5	322357	14	WASHER, SPRING, Belleville, M6,
6	353308	13	NUT, LOCK, M6 x 1, Cl 8,
7	140017	6	WASHER, M10 x 20 x 2,
8	412141	6	NUT, LOCK, M10 x 1.5, Cl 8,
9	84436002	12	CANVAS,
10	84436103	12	PLATE, FIXING,
11	84457966	108	RIVET,
12	43129	6	BOLT, Hex, M8 x 40, 8.8,
13	455959	16	RIVET, Rivet
14	435587	2	PLATE, FIXING, {PP:80435587}
15	9502212	2	GASKET, {PP:89502212}
16	80920236	6	PIN,
17	80919875	6	RING,
18	80919958	12	SPACER,
19	84436031	1	FRAME,
20	100016	2	NUT, M10, Cl 8,
21	412655	2	WASHER, SPRING, Belleville, M10,
22	86512446	2	BOLT, CARRIAGE, Short NK, M10 x 30, Cl8.8, Full Thd,
23	89706690	8	NUT, M8, Cl 8,
24	322358	2	WASHER, SPRING, Belleville, M8,
25	84074015	1	BRACKET,
26	378243	12	WASHER, {PP:80378243} M8,
27	80919626	1	BRACKET,
28	86512444	2	BOLT, CARRIAGE, Short NK, M8 x 40, Cl8.8, Full Thd, M8x40
29	120100	2	BOLT, Hex, M6 x 20, 8.8,
30	89505278	1	SPRING,
31	89505279	1	PLATE,
32	15896221	2	NUT, M6, Cl 10,
33	84436040	6	SIEVE,
	80401159	0.006	LOCTITE
	80401624	0.006	LOCTITE

CS660 COMBINE BASE UNIT (1/03-) - Accessories

18.84085594(01) UPPER SIEVE HART CARTER 1 1/8" - FIXED SHOE

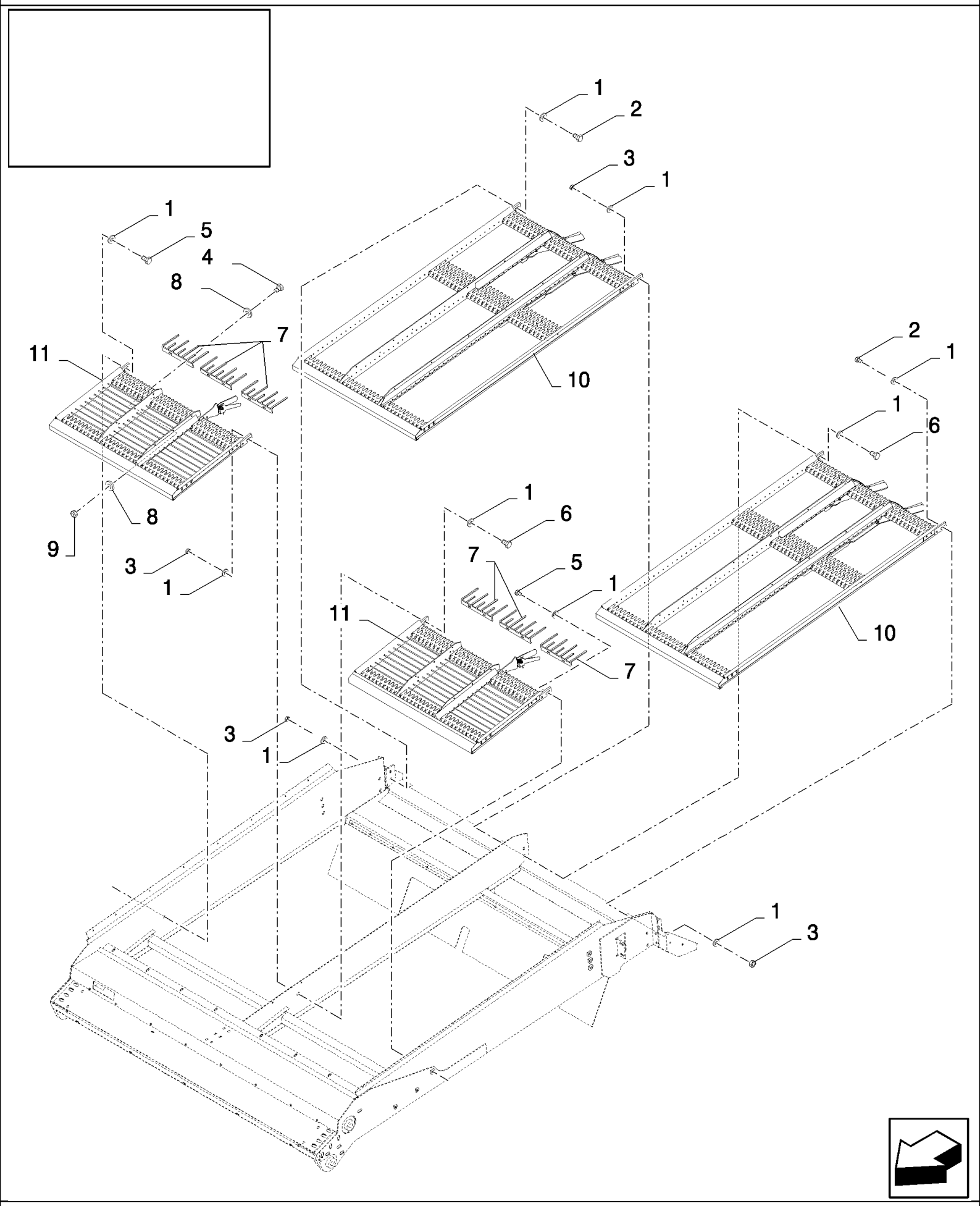

CS660 COMBINE BASE UNIT (1/03-) - Accessories

18.84085594(01) UPPER SIEVE HART CARTER 1 1/8" - FIXED SHOE

ссылка	Номер детали	Кол-во	Описание
	84085594		DIA KIT, HARVESTER,
1	140045	10	WASHER, SPRING, Belleville, M10,
2	43140	2	BOLT, Hex, M10 x 30, 8.8, Full Thd,
3	100016	4	NUT, M10, Cl 8,
4	120102	12	BOLT, Hex, M6 x 40, 8.8, Full Thd,
5	43138	2	BOLT, Hex, M10 x 20, 8.8, Full Thd,
6	9706704	2	BOLT, Hex, M10 x 35, 8.8, Full Thd,
7	84446427	6	RAKE,
8	412649	24	WASHER, SPRING, Belleville, M6,
9	15896221	12	NUT, M6, Cl 10,
10	84442418	2	SIEVE,
11	84442356	2	SIEVE,

18.84085596(01) UPPER SIEVE HART CARTER 1 5/8" - FIXED SHOE

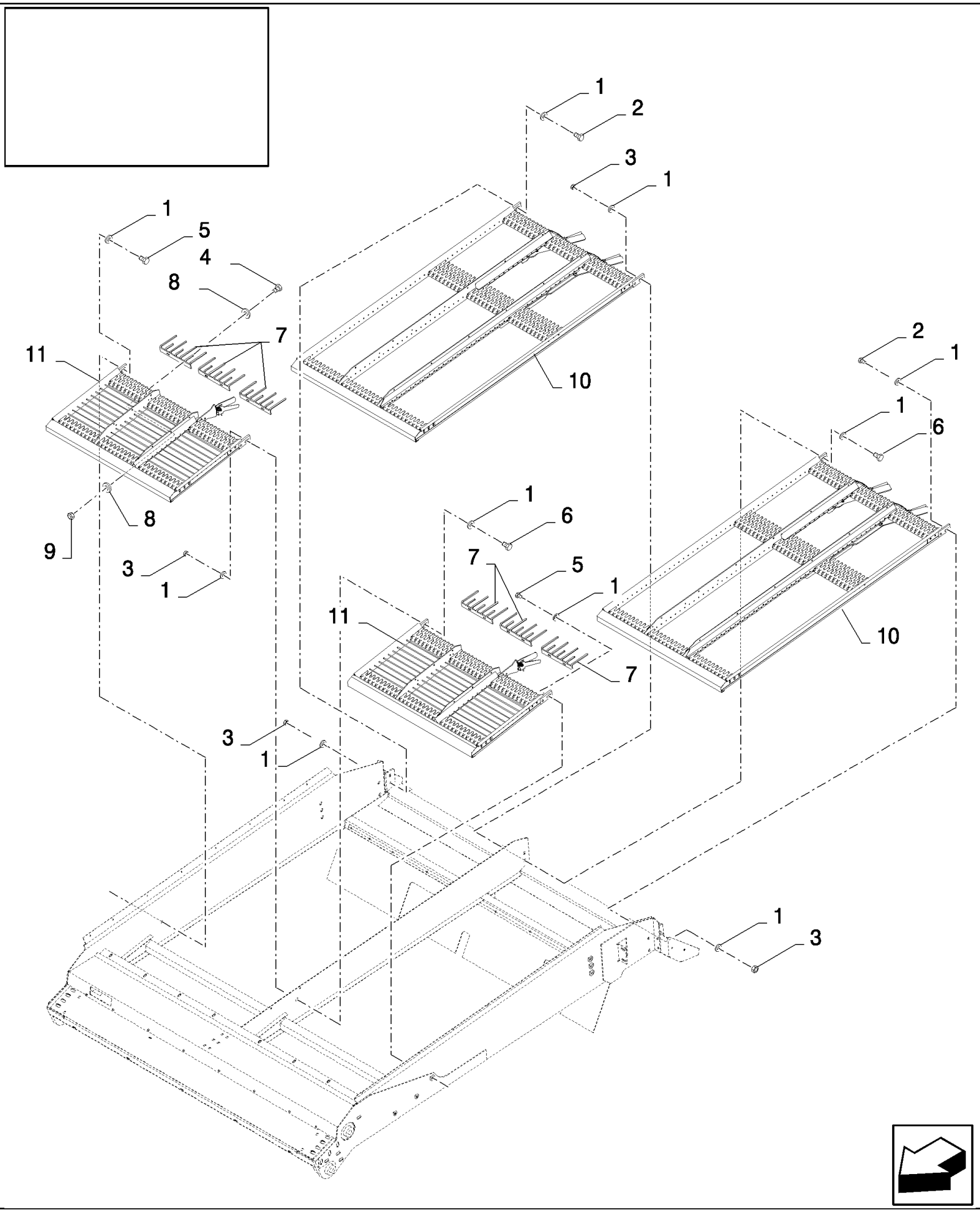

CS660 COMBINE BASE UNIT (1/03-) - Accessories

18.84085596(01) UPPER SIEVE HART CARTER 1 5/8" - FIXED SHOE

ссылка	Номер детали	Кол-во	Описание
	84085596		DIA KIT, HARVESTER,
1	140045	10	WASHER, SPRING, Belleville, M10,
2	43140	2	BOLT, Hex, M10 x 30, 8.8, Full Thd,
3	100016	4	NUT, M10, Cl 8,
4	120102	12	BOLT, Hex, M6 x 40, 8.8, Full Thd,
5	43138	2	BOLT, Hex, M10 x 20, 8.8, Full Thd,
6	9706704	2	BOLT, Hex, M10 x 35, 8.8, Full Thd,
7	84446427	6	RAKE,
8	412649	24	WASHER, SPRING, Belleville, M6,
9	15896221	12	NUT, M6, Cl 10,
10	84097915	2	SIEVE,
11	84442355	2	SIEVE,

CS660 COMBINE BASE UNIT (1/03-) - Accessories

18.84085597(01) HILLSIDE DIVIDES - FIXED SHOE

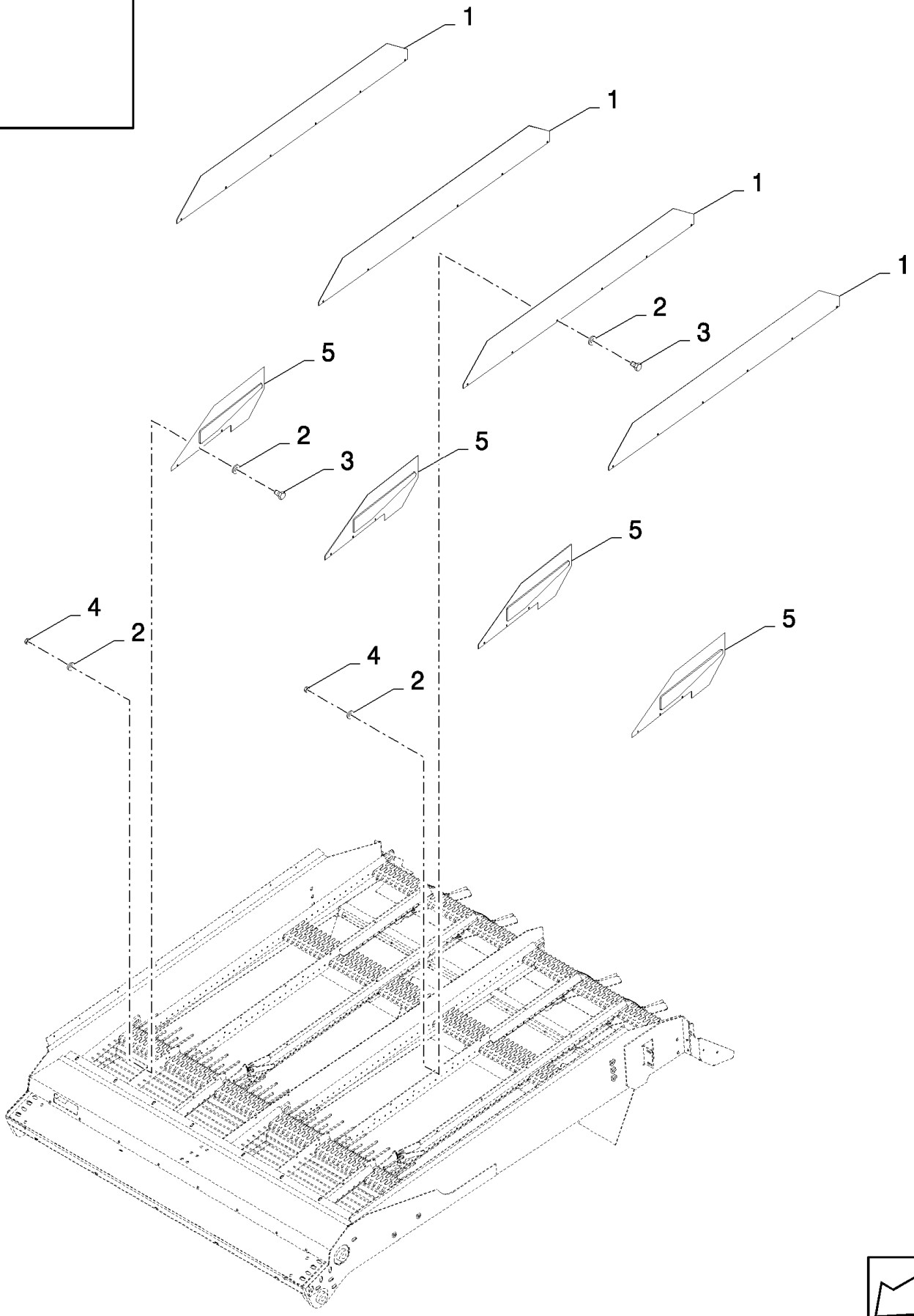

CS660 COMBINE BASE UNIT (1/03-) - Accessories

18.84085597(01) HILLSIDE DIVIDES - FIXED SHOE

ссылка	Номер детали	Кол-во	Описание
	84085597		DIA KIT, HARVESTER,
1	84442490	4	DEFLECTOR,
2	322356	72	WASHER, LOCK, {PP:80322356} 5MM
3	300806	36	BOLT, Hex, M5 x 10, 8.8, Full Thd,
4	86508813	36	NUT, M5, Cl 8,
5	84442195	4	DEFLECTOR,

18.84085600(01) GRAEPEL SIEVE EXTENSION

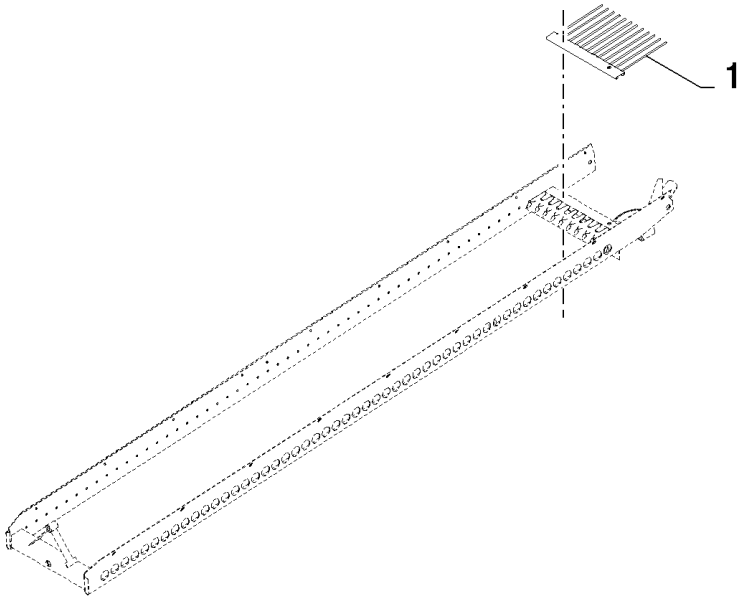

18.84085600(01) GRAEPEL SIEVE EXTENSION

ссылка	Номер детали	Кол-во	Описание
	84085600		DIA KIT, HARVESTER,
1	80922395	6	SIEVE,

CS660 COMBINE BASE UNIT (1/03-) - Accessories

18.84085604(01) PERFORATED COVERS LONG

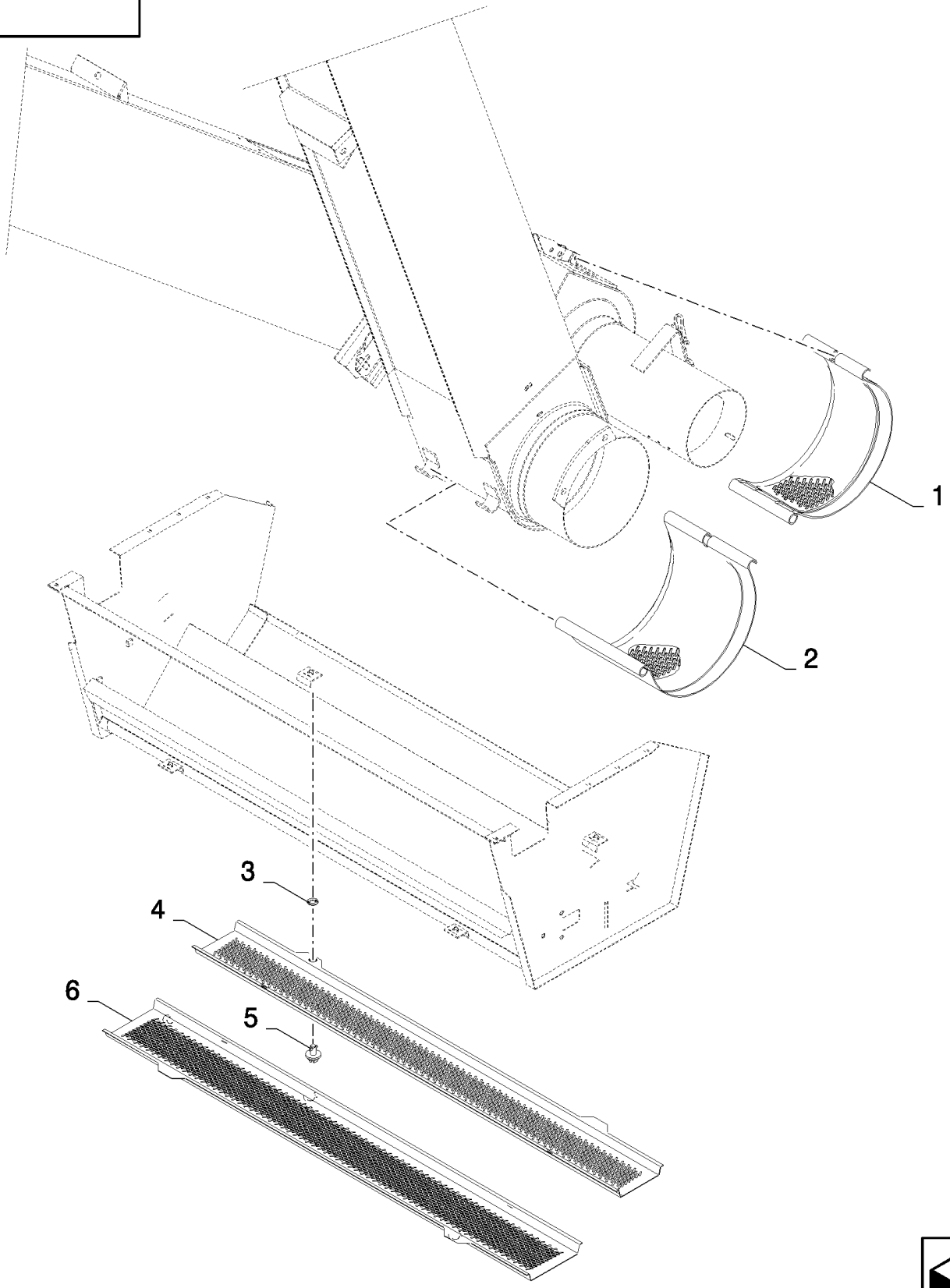

18.84085604(01) PERFORATED COVERS LONG

ссылка	Номер детали	Кол-во	Описание
	84085604		DIA KIT, HARVESTER,
1	84982640	1	GUARD,
2	84982648	1	GUARD,
3	9514605	4	RING, LOCKING, {PP:89514605}
4	84982659	1	GUARD,
5	89514603	4	LOCK,
6	84982657	1	GUARD,

18.84085609(01) STEERING PLATFORM EXTENSION - 200MM

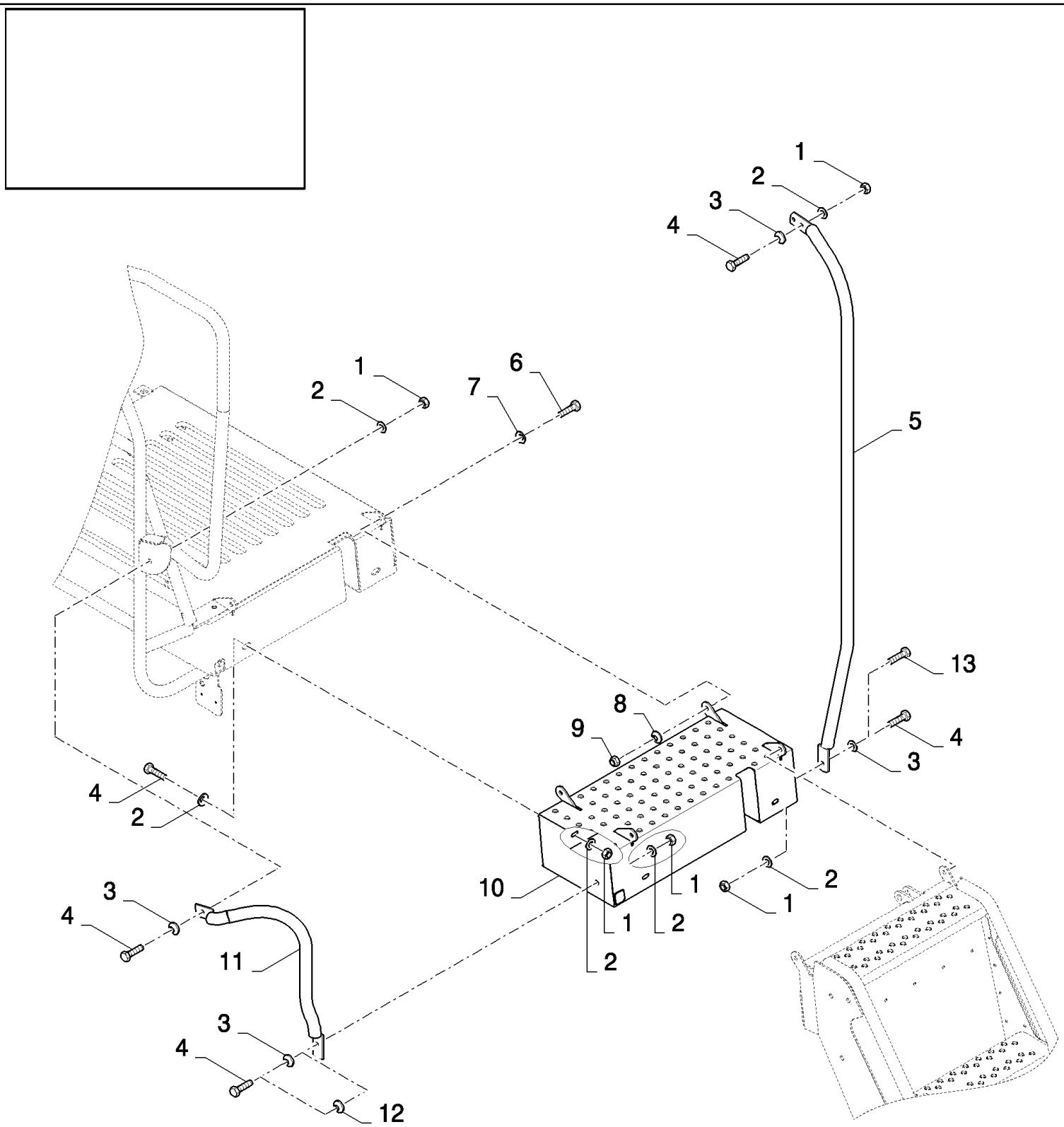

CS660 COMBINE BASE UNIT (1/03-) - Accessories

18.84085609(01) STEERING PLATFORM EXTENSION - 200MM

ссылка	Номер детали	Кол-во	Описание
	84085609		DIA KIT, HARVESTER,
1	89706690	5	NUT, M8, Cl 8,
2	322358	3	WASHER, SPRING, Belleville, M8,
3	140016	2	WASHER, M8 x 16 x 1.6,
4	43128	4	BOLT, Hex, M8 x 30, 8.8,
5	84077985	1	HANDRAIL,
6	43139	3	SCREW, {PP:80043139} M10x25
7	378244	2	WASHER, M10,
8	140045	4	WASHER, SPRING, Belleville, M10,
9	100037	2	NUT, M10 x 1.5, Cl 8,
10	84077653	1	EXTENSION,
11	84077977	1	HANDRAIL,
12	86511315	5	WASHER, M8 x 16 x 1.6,
13	43140	1	BOLT, Hex, M10 x 30, 8.8, Full Thd,

18.84085610(01) STEERING PLATFORM EXTENSION - 400MM

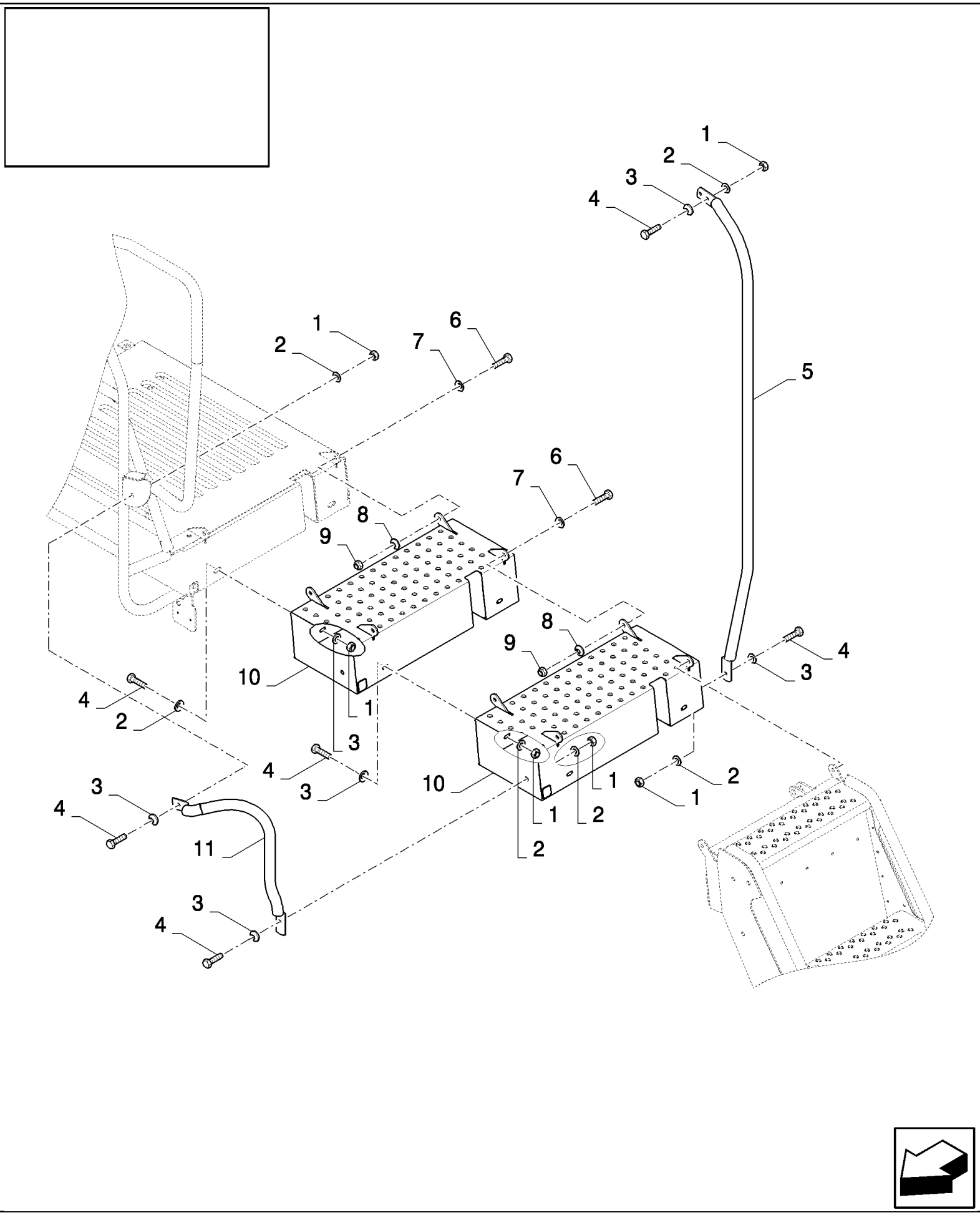

CS660 COMBINE BASE UNIT (1/03-) - Accessories

18.84085610(01) STEERING PLATFORM EXTENSION - 400MM

ссылка	Номер детали	Кол-во	Описание
	84085610		DIA KIT, HARVESTER,
1	89706690	8	NUT, M8, Cl 8,
2	322358	8	WASHER, SPRING, Belleville, M8,
3	140016	8	WASHER, M8 x 16 x 1.6,
4	43128	8	BOLT, Hex, M8 x 30, 8.8,
5	84447245	1	HANDRAIL,
6	43139	4	SCREW, {PP:80043139} M10x25
7	378244	4	WASHER, M10,
8	140045	4	WASHER, SPRING, Belleville, M10,
9	100037	4	NUT, M10 x 1.5, Cl 8,
10	84077653	2	EXTENSION,
11	84435910	1	HANDRAIL,

18.84085617(01) COUNTERWEIGHTS WHEELS 400KG

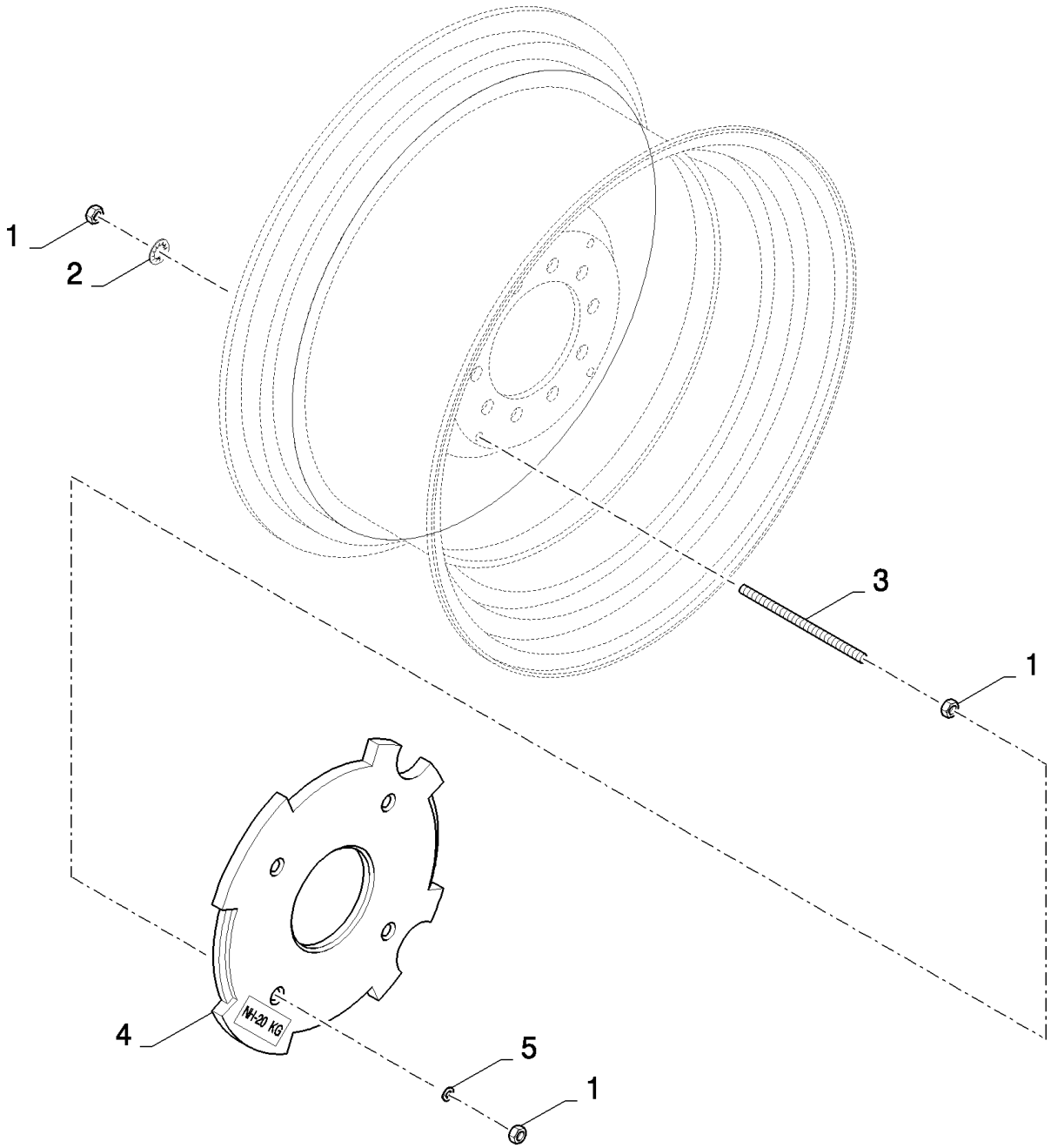

CS660 COMBINE BASE UNIT (1/03-) - Accessories

18.84085617(01) COUNTERWEIGHTS WHEELS 400KG

ссылка	Номер детали	Кол-во	Описание
	84085617		DIA KIT, HARVESTER,
1	9706685	24	NUT, M12, Cl 8,
2	300913	8	WASHER, LOCK, {PP:80300913}
3	84989795	8	ROD, THREADED,
4	84438813	20	WEIGHT, COUNTER,
5	394630	8	WASHER, {PP:80394630} 13MM

18.84085618(01) COUNTERWEIGHTS WHEELS 200KG

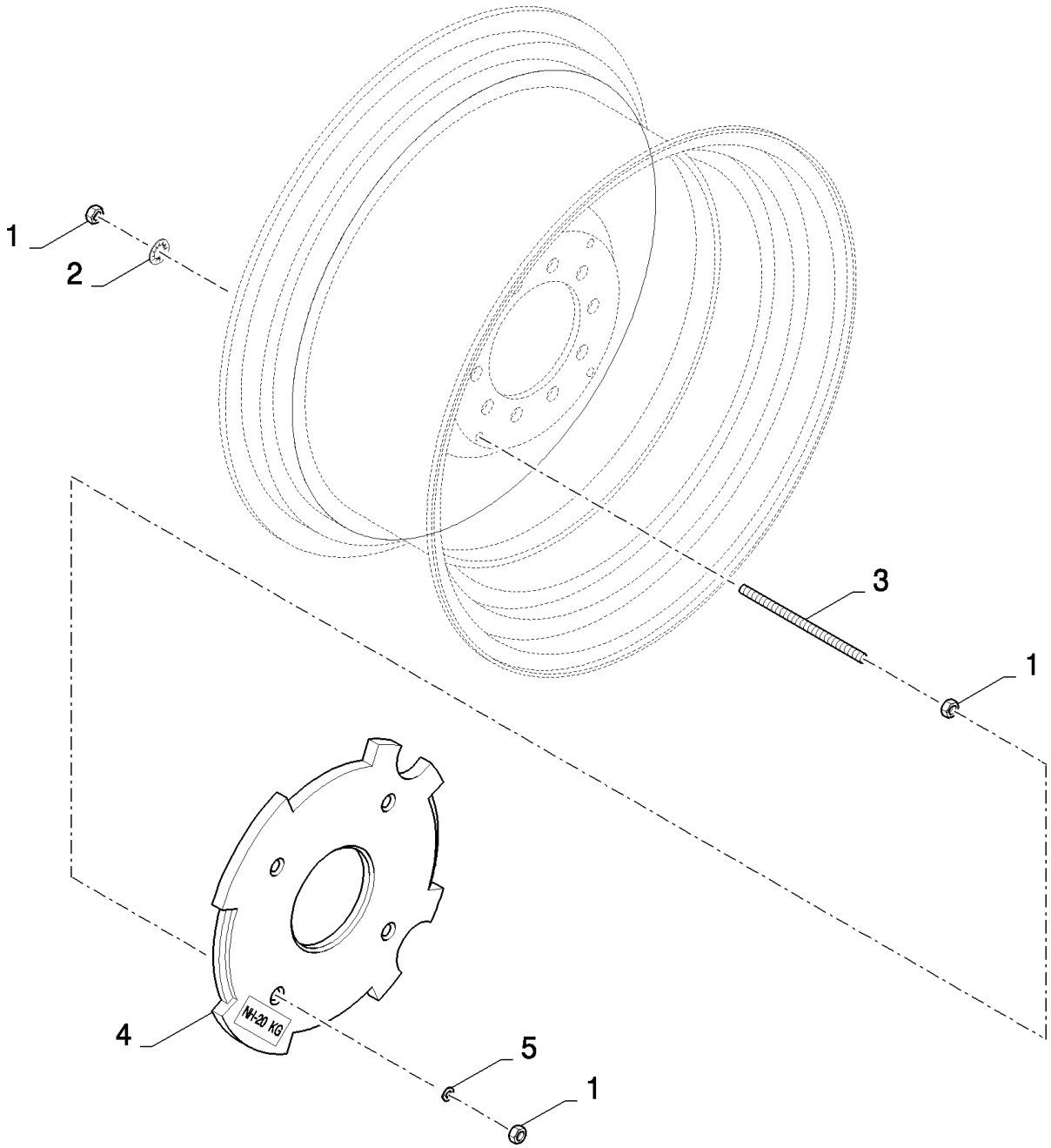

CS660 COMBINE BASE UNIT (1/03-) - Accessories

18.84085618(01) COUNTERWEIGHTS WHEELS 200KG

ссылка	Номер детали	Кол-во	Описание
	84085618		DIA KIT, HARVESTER,
1	9706685	24	NUT, M12, Cl 8,
2	300913	8	WASHER, LOCK, {PP:80300913}
3	84989794	8	ROD, THREADED,
4	84438813	10	WEIGHT, COUNTER,
5	394630	8	WASHER, {PP:80394630} 13MM

18.84085621(01) ADDITIONAL LIFTING RAM FRONT ELEVATOR FOR CORN HEADER

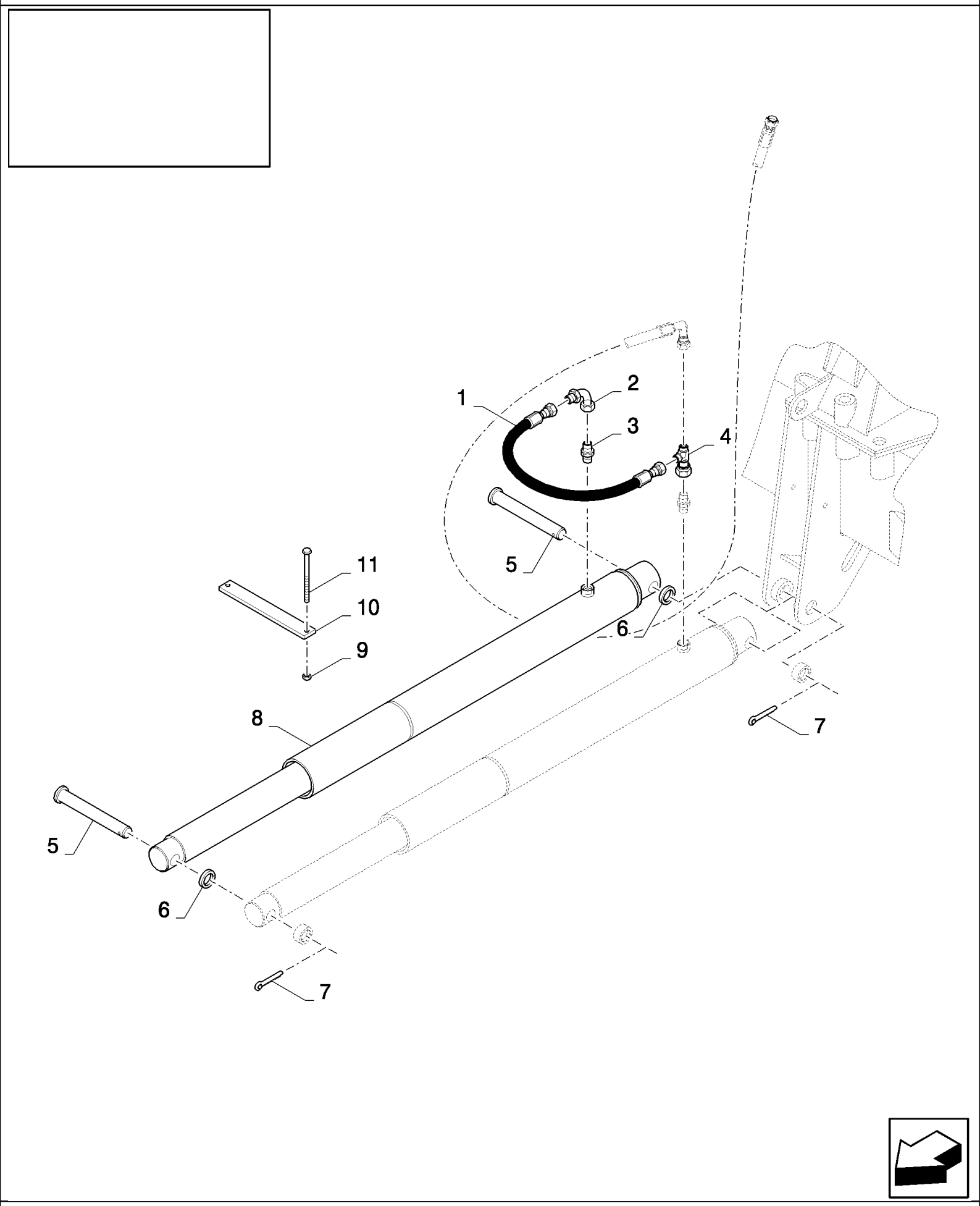

18.84085621(01) ADDITIONAL LIFTING RAM FRONT ELEVATOR FOR CORN HEADER

ссылка	Номер детали	Кол-во	Описание
	84085621		DIA KIT, HARVESTER,
1	9833953	1	HOSE, {PP:89833953}
2	9508529	1	ELBOW, {PP:89508529}
3	395782	1	CONNECTOR, HYD., {PP:80395782}
4	84455036	1	CONNECTION, 3 WAY,
5	84440399	2	PIN,
6	84071288	2	WASHER,
7	300423	2	PIN, SPLIT (COTTER), {PP:80300423} M6.3 x 50,
8	84444496	1	CYLINDER,
9	100037	2	NUT, M10 x 1.5, Cl 8,
10	84440400	2	BRACKET,
11	86508573	2	BOLT, Hex, M10 x 110, 8.8, M10x110

18.84085651(01) CHAFF SPREADER - REKORD

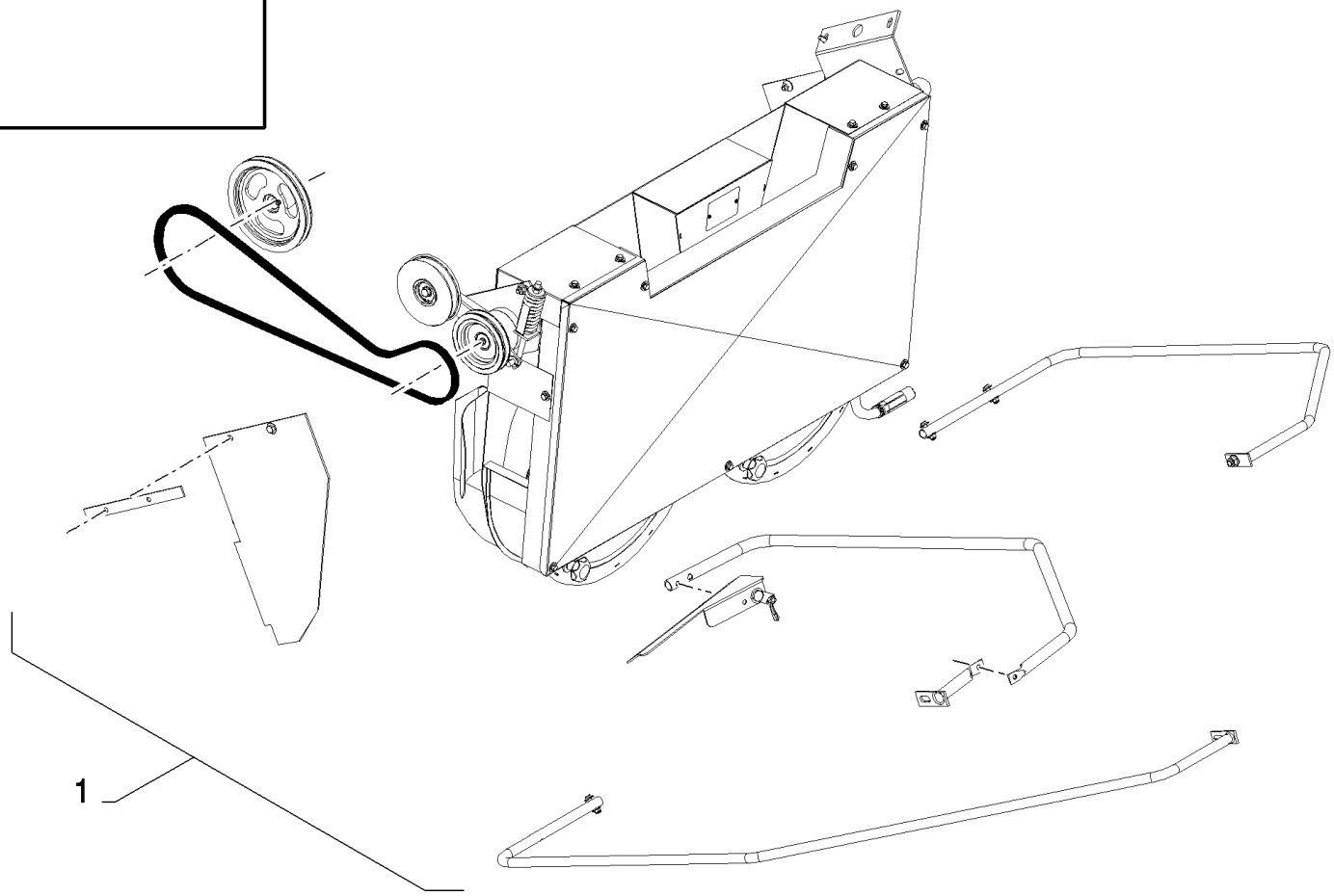

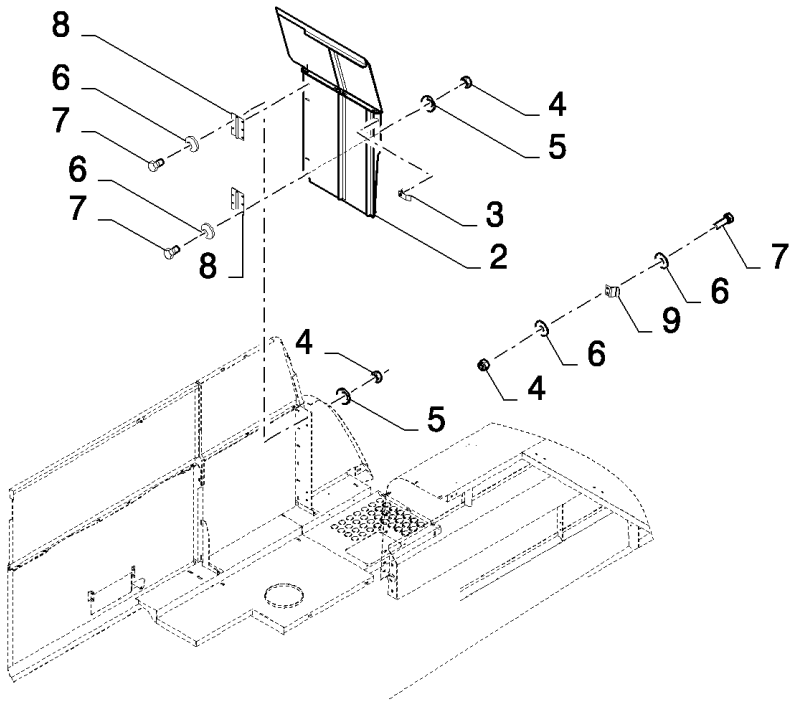

CS660 COMBINE BASE UNIT (1/03-) - Accessories

18.84085651(01) CHAFF SPREADER - REKORD

ссылка	Номер детали	Кол-во	Описание
	84085651		DIA KIT, HARVESTER,
1	84085973	1	, NO SUBINFO AVAILABLE
2	84453202	1	DOOR,
3	89577003	1	LOCK,
4	15896221	10	NUT, M6, Cl 10,
5	322357	8	WASHER, SPRING, Belleville, M6,
6	412649	12	WASHER, SPRING, {PP:80412649} Belleville, M6,
7	86508568	10	BOLT, Hex, M6 x 16, 8.8,
8	84071391	2	HINGE,
9	84448395	1	BRACKET,

18.84085775(01) REBUILD KIT - WHEAT TO RICE - 56MM TEETH WITH ROTARY SEPARATOR

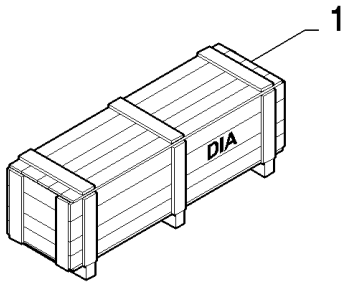

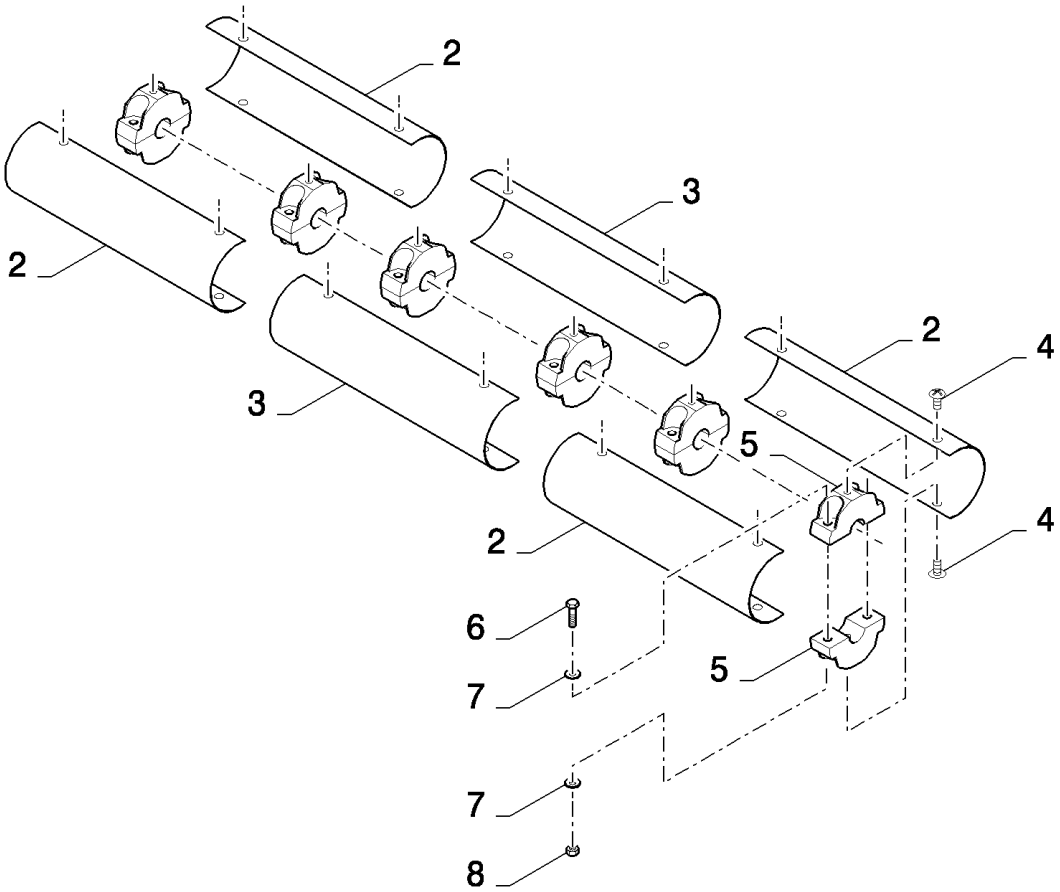

CS660 COMBINE BASE UNIT (1/03-) - Accessories

18.84085775(01) REBUILD KIT - WHEAT TO RICE - 56MM TEETH WITH ROTARY SEPARATOR

ссылка	Номер детали	Кол-во	Описание
	84085775		DIA KIT, HARVESTER,
1	84070039	1	DIA KIT, HARVESTER,
1	84081346	1	DIA KIT, HARVESTER,
1	84085573	1	DIA KIT, HARVESTER,
2	84022121	4	SHIELD,
3	84449037	2	SHIELD,
4	62087	12	SCREW, {PP:80062087} M8x20
5	9513095	12	CLAMP, {PP:89513095}
6	386045	12	BOLT, Hex, M8 x 45, 8.8,
7	86511315	24	WASHER, M8 x 16 x 1.6,
8	86629542	12	NUT, LOCK, M8 x 1.25, Cl 8,
	80401624	0.02	

18.84085775(02) REBUILD KIT - WHEAT TO RICE - 56MM TEETH WITH ROTARY SEPARATOR

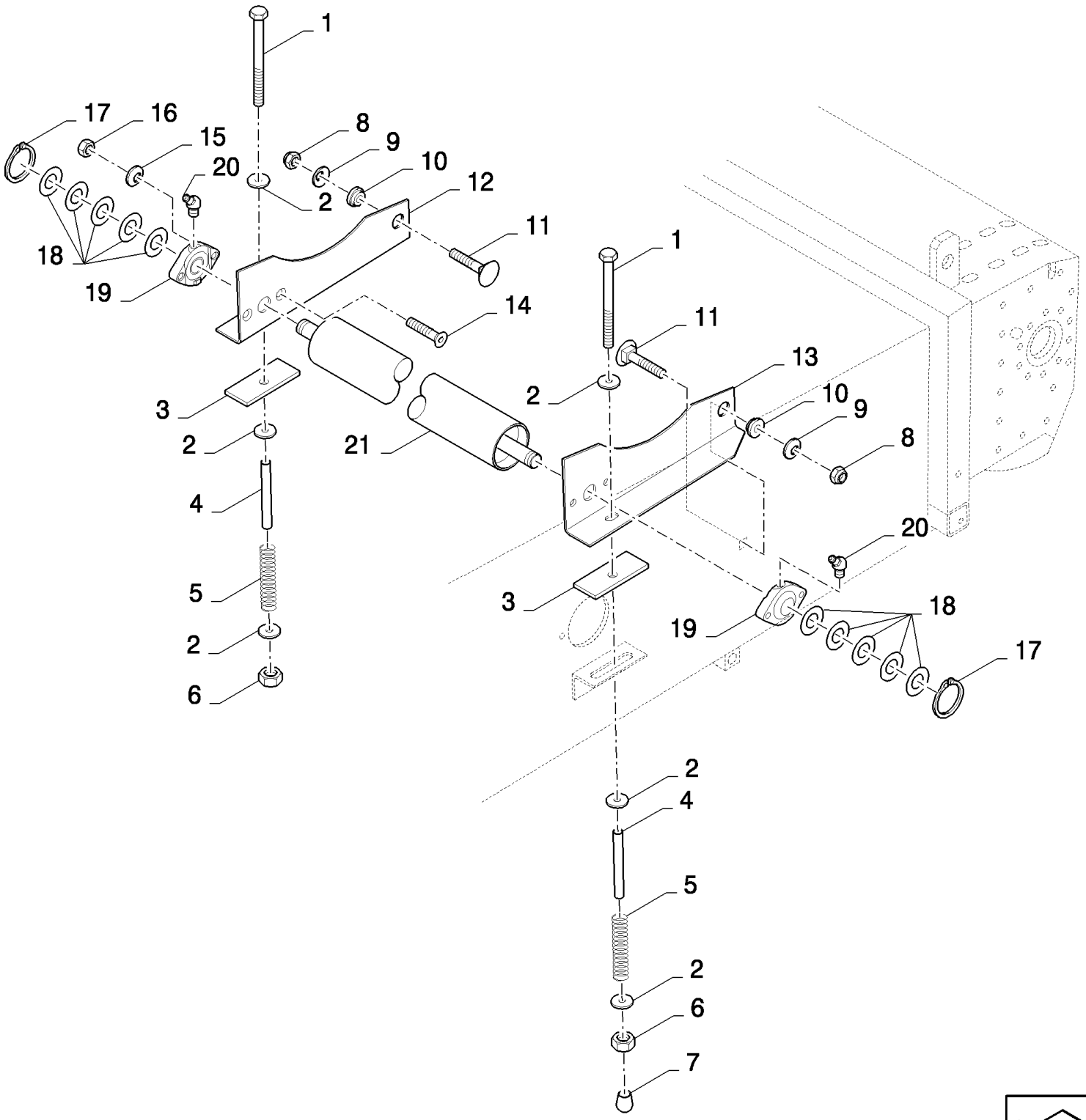

CS660 COMBINE BASE UNIT (1/03-) - Accessories

18.84085775(02) REBUILD KIT - WHEAT TO RICE - 56MM TEETH WITH ROTARY SEPARATOR

ссылка	Номер детали	Кол-во	Описание
1	412579	2	BOLT, {PP:80412579} Hex, M10 x 230, 8.8, M10x230
2	9832748	6	WASHER, {PP:89832748} 11MM
3	9500474	2	PAD, RUBBER, {PP:89500474}
4	84334391	2	TUBE,
5	354085	2	SPRING, {PP:80354085}
6	412141	2	NUT, LOCK, M10 x 1.5, Cl 8,
7	84005018	1	PLUG,
8	100038	2	NUT, LOCK, M12 x 1.75, Cl 8,
9	140046	2	WASHER, SPRING, Belleville, M12,
10	9500475	2	BUSHING, {PP:89500475}
11	120044	2	BOLT, CARRIAGE, Short NK, M12 x 30, Cl8.8, Full Thd,
12	84039236	1	SUPPORT, RH
13	84039235	1	SUPPORT, LH
14	412466	4	SCREW, {PP:80412466} Hex Soc Flat Hd, M10 x 35, 8.8, M10x40
15	140045	4	WASHER, SPRING, Belleville, M10,
16	100016	4	NUT, M10, Cl 8,
17	370002	2	RING, SNAP, {PP:80370002} M25, Ext,
18	140229	10	WASHER, {PP:80140229} 26MM
19	9514667	2	BEARING ASSY, {PP:89514667}
20	84814929	2	NIPPLE, LUBE,
21	84071544	1	ROLLER, CONVEYOR,
	84334829	2	DECAL,
	86503661	0.01	GREASE
	80400972	0.01	GREASE
	89504635	0.01	LOCTITE

18.84085775(03) REBUILD KIT - WHEAT TO RICE - 56MM TEETH WITH ROTARY SEPARATOR

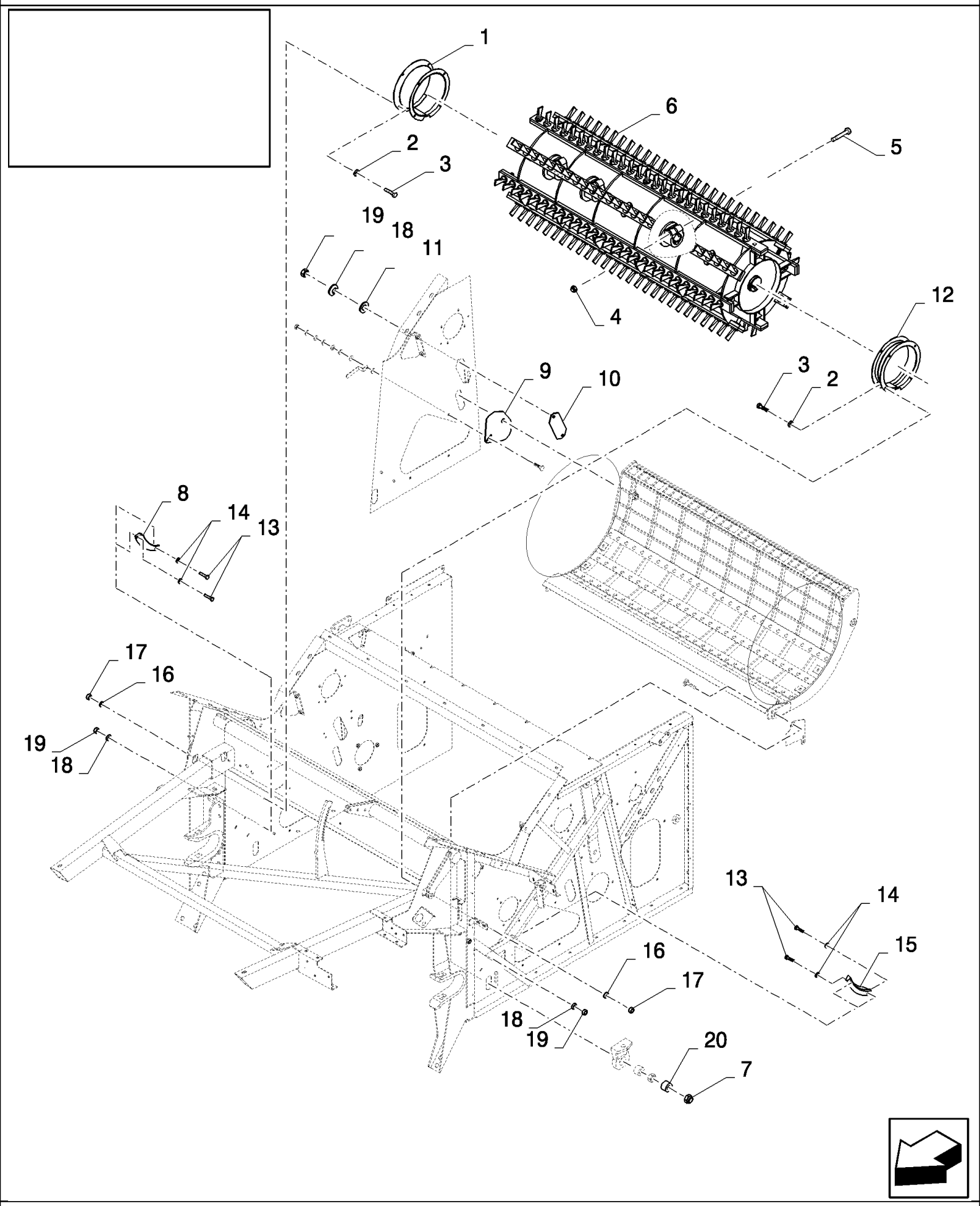

CS660 COMBINE BASE UNIT (1/03-) - Accessories

18.84085775(03) REBUILD KIT - WHEAT TO RICE - 56MM TEETH WITH ROTARY SEPARATOR

ссылка	Номер детали	Кол-во	Описание
1	80424748	1	SHIELD,
2	140016	6	WASHER, M8 x 16 x 1.6,
3	120104	6	BOLT, Hex, M8 x 20, 8.8,
4	86000441	4	NUT, LOCK, M16 x 2, Cl 8,
5	350616	4	BOLT, Hex, M16 x 90, 8.8,
6	84452125	1	DRUM,
7	412180	2	NUT, LOCK, {PP:80412180} M20 x 2.5, Cl 8, M20
8	354593	1	SHIELD, {PP:80354593}
9	84443839	1	PLATE, COVER,
10	84443834	1	PLATE, COVER,
11	140040	2	WASHER, M6 x 22 x 2,
12	84452645	1	PROTECTING COVER,
13	120100	4	BOLT, Hex, M6 x 20, 8.8,
14	412649	4	WASHER, SPRING, Belleville, M6,
15	354592	1	SHIELD, {PP:80354592}
16	322358	6	WASHER, SPRING, Belleville, M8,
17	89706690	6	NUT, M8, Cl 8,
18	322357	6	WASHER, SPRING, Belleville, M6,
19	15896221	6	NUT, M6, Cl 10,
20	84007394	2	BUSHING,

18.84085775(04) REBUILD KIT - WHEAT TO RICE - 56MM TEETH WITH ROTARY SEPARATOR

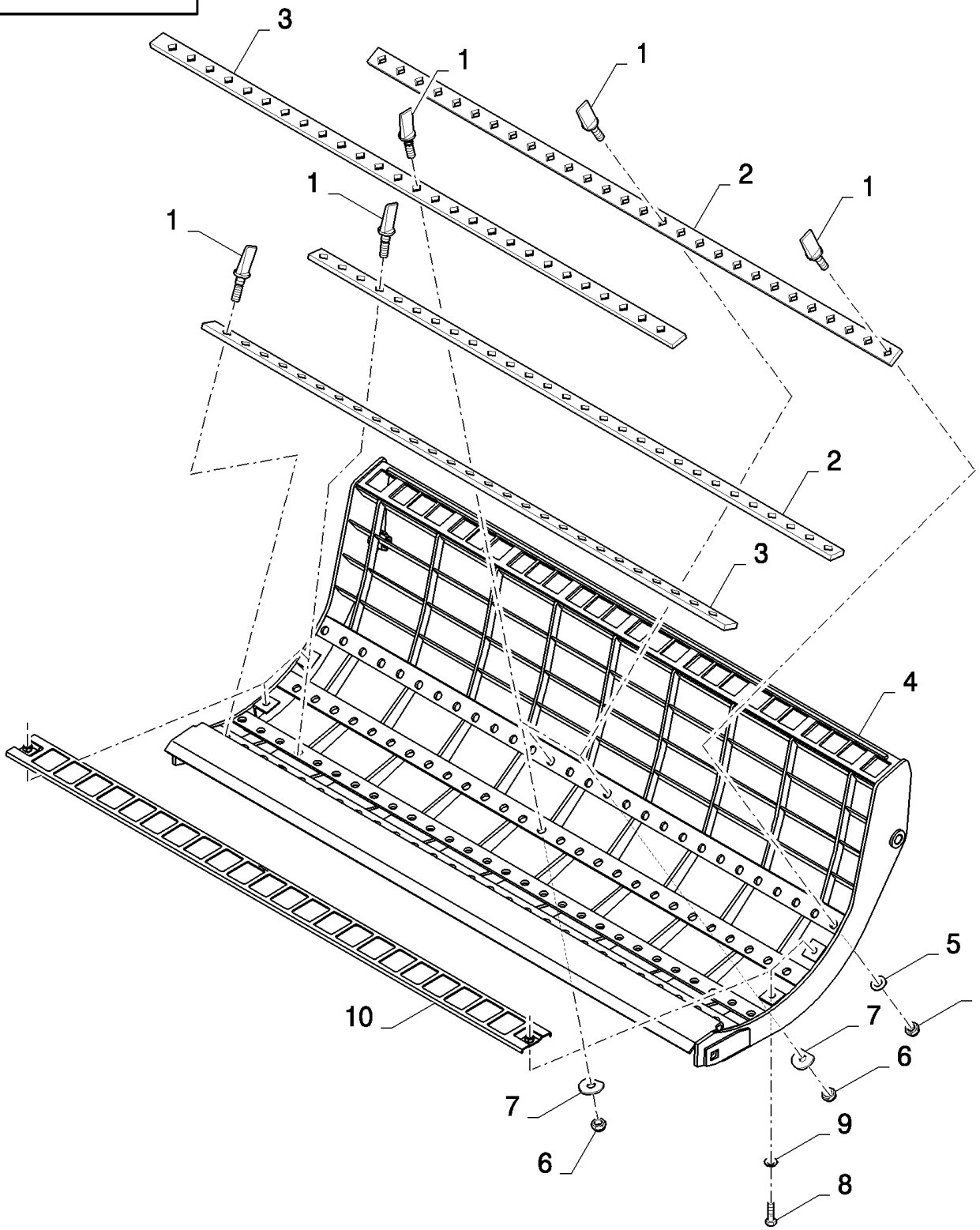

CS660 COMBINE BASE UNIT (1/03-) - Accessories

18.84085775(04) REBUILD KIT - WHEAT TO RICE - 56MM TEETH WITH ROTARY SEPARATOR

ссылка	Номер детали	Кол-во	Описание
1	396935	81	TOOTH, RICE, {PP:80396935}
2	411298	2	PLATE, FIXING, {PP:80411298}
3	411304	2	PLATE, FIXING, {PP:80411304}
4	84437361	1	CONCAVE,
5	394631	78	WASHER, {PP:80394631} 17MM
6	86000441	81	NUT, LOCK, M16 x 2, Cl 8,
7	333041	3	WASHER, {PP:80333041} 16.5MM
8	43138	4	BOLT, Hex, M10 x 20, 8.8, Full Thd,
9	140045	4	WASHER, SPRING, Belleville, M10,
10	84038642	2	GRILLE,

18.84085777(01) STRAWCHOPPER - MANUAL ADJUSTABLE DEFLECTORS

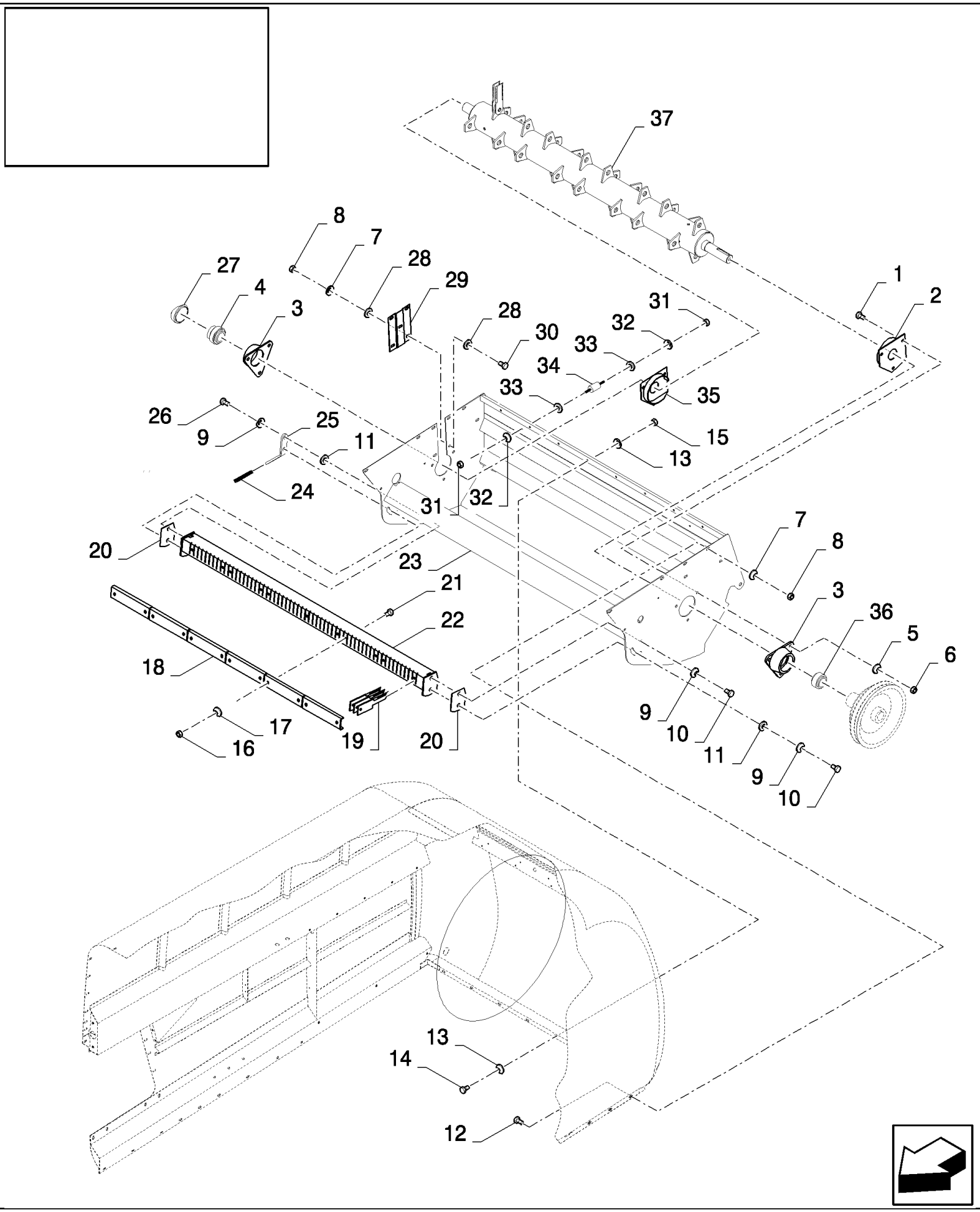

CS660 COMBINE BASE UNIT (1/03-) - Accessories

18.84085777(01) STRAWCHOPPER - MANUAL ADJUSTABLE DEFLECTORS

ссылка	Номер детали	Кол-во	Описание
	84085777		DIA KIT, HARVESTER,
1	300389	6	BOLT, Hex, M12 x 35, 8.8, Full Thd,
2	84434806	1	GUARD,
3	84334208	2	HOUSING, BEARING,
4	385424	2	BEARING ASSY, {PP:80385424}
5	140046	6	WASHER, SPRING, Belleville, M12,
6	9706685	6	NUT, M12, Cl 8,
7	140045	9	WASHER, SPRING, Belleville, M10,
8	100016	9	NUT, M10, Cl 8,
9	140048	4	WASHER, SPRING, Belleville, M16,
10	43167	2	BOLT, Hex, M16 x 30, 8.8, Full Thd,
11	140020	3	WASHER, M16 x 30 x 3,
12	338949	7	BOLT, CARRIAGE, Short NK, M10 x 25, Cl8.8, Full Thd,
13	322358	16	WASHER, SPRING, Belleville, M8,
14	120104	8	BOLT, Hex, M8 x 20, 8.8,
15	89706690	8	NUT, M8, Cl 8,
16	86629542	12	NUT, LOCK, M8 x 1.25, Cl 8,
17	140041	12	WASHER, M8 x 28 x 3,
18	84434026	6	RETAINER,
19	9516450	60	KNIFE, {PP:89516450}
20	84434200	3	SHIM,
21	86528166	12	BOLT, Hex, M8 x 120, 8.8, M8x120
22	84440064	1	SUPPORT,
23	84434060	1	FRAME, , BSN C487
23	87373172	1	FRAME, , ASN D488
24	84439164	1	HANDLE GRIP,
25	84434209	1	LEVER,
26	43168	2	BOLT, Hex, M16 x 40, 8.8,
27	137395	1	DUST CAP,
28	140042	4	WASHER, M10 x 34 x 3,
29	84440375	1	PLATE,
30	43139	2	SCREW, M10x25
31	15896221	8	NUT, M6, Cl 10,
32	322357	8	WASHER, SPRING, Belleville, M6,
33	448516	8	SPACER,
34	9513734	4	ISOLATOR,
35	84434825	1	GUARD,
36	84453848	2	BEARING, BALL,
37	84079088	1	ROTOR,
	86503661	0.05	GREASE
	80400972	0.05	GREASE

18.84085777(02) STRAWCHOPPER - MANUAL ADJUSTABLE DEFLECTORS

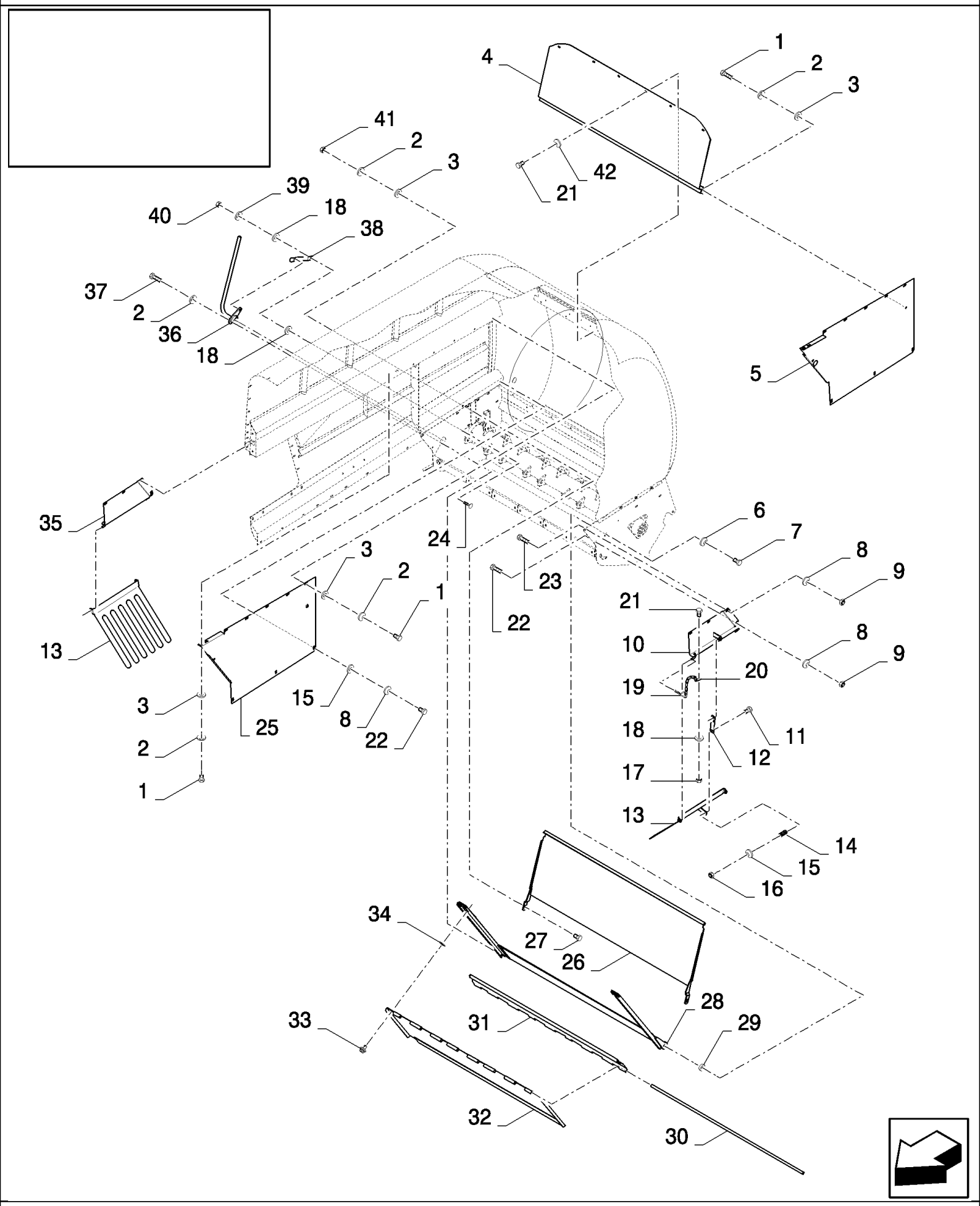

18.84085777(02) STRAWCHOPPER - MANUAL ADJUSTABLE DEFLECTORS

ссылка	Номер детали	Кол-во	Описание
1	120104	16	BOLT, Hex, M8 x 20, 8.8,
2	322358	20	WASHER, SPRING, Belleville, M8,
3	140041	18	WASHER, M8 x 28 x 3,
4	84434841	1	DEFLECTOR,
5	84434246	1	PLATE,
6	140048	1	WASHER, SPRING, Belleville, M16,
7	43167	1	BOLT, Hex, M16 x 30, 8.8, Full Thd,
8	140045	14	WASHER, SPRING, Belleville, M10,
9	100016	8	NUT, M10, Cl 8,
10	84433778	1	SUPPORT,
11	325829	2	BOLT, {PP:80325829} Hex, M10 x 45, 8.8, M10x45
12	84434208	2	BRACKET,
13	84433715	2	RAKE,
14	180072	2	SPRING, {PP:80180072}
15	140017	8	WASHER, M10 x 20 x 2,
16	100037	2	NUT, M10 x 1.5, Cl 8,
17	15896221	4	NUT, M6, Cl 10,
18	9824259	6	WASHER, M6 x 12 x 1.6,
19	370539	4	PIN, SPLIT (COTTER), {PP:80370539}
20	89839041	4	CHAIN,
21	86508568	8	BOLT, Hex, M6 x 16, 8.8,
22	43138	8	BOLT, Hex, M10 x 20, 8.8, Full Thd,
23	338949	6	BOLT, CARRIAGE, Short NK, M10 x 25, Cl8.8, Full Thd,
24	374891	1	BOLT, CARRIAGE, Short NK, M6 x 25, Cl8.8, Full Thd,
25	84434345	1	PLATE,
26	84434844	1	DEFLECTOR,
27	43465	2	BOLT, CARRIAGE, Short NK, M8 x 30, Cl8.8, Full Thd,
28	84439336	1	DEFLECTOR,
29	84444700	1	BUSHING,
30	84439312	1	TUBE,
31	84441462	1	DEFLECTOR,
32	84439346	1	DEFLECTOR,
33	89514603	2	LOCK,
34	9514605	2	RING, LOCKING, {PP:89514605}
35	84433929	1	SUPPORT,
36	84434503	1	LEVER,
37	43128	2	BOLT, Hex, M8 x 30, 8.8,
38	84440371	1	CLIP,
39	322357	1	WASHER, SPRING, Belleville, M6,
40	353308	1	NUT, LOCK, M6 x 1, Cl 8,
41	89706690	2	NUT, M8, Cl 8,
42	412649	6	WASHER, SPRING, Belleville, M6,
43	84448617	2	RAKE,

18.84085777(03) STRAWCHOPPER - MANUAL ADJUSTABLE DEFLECTORS

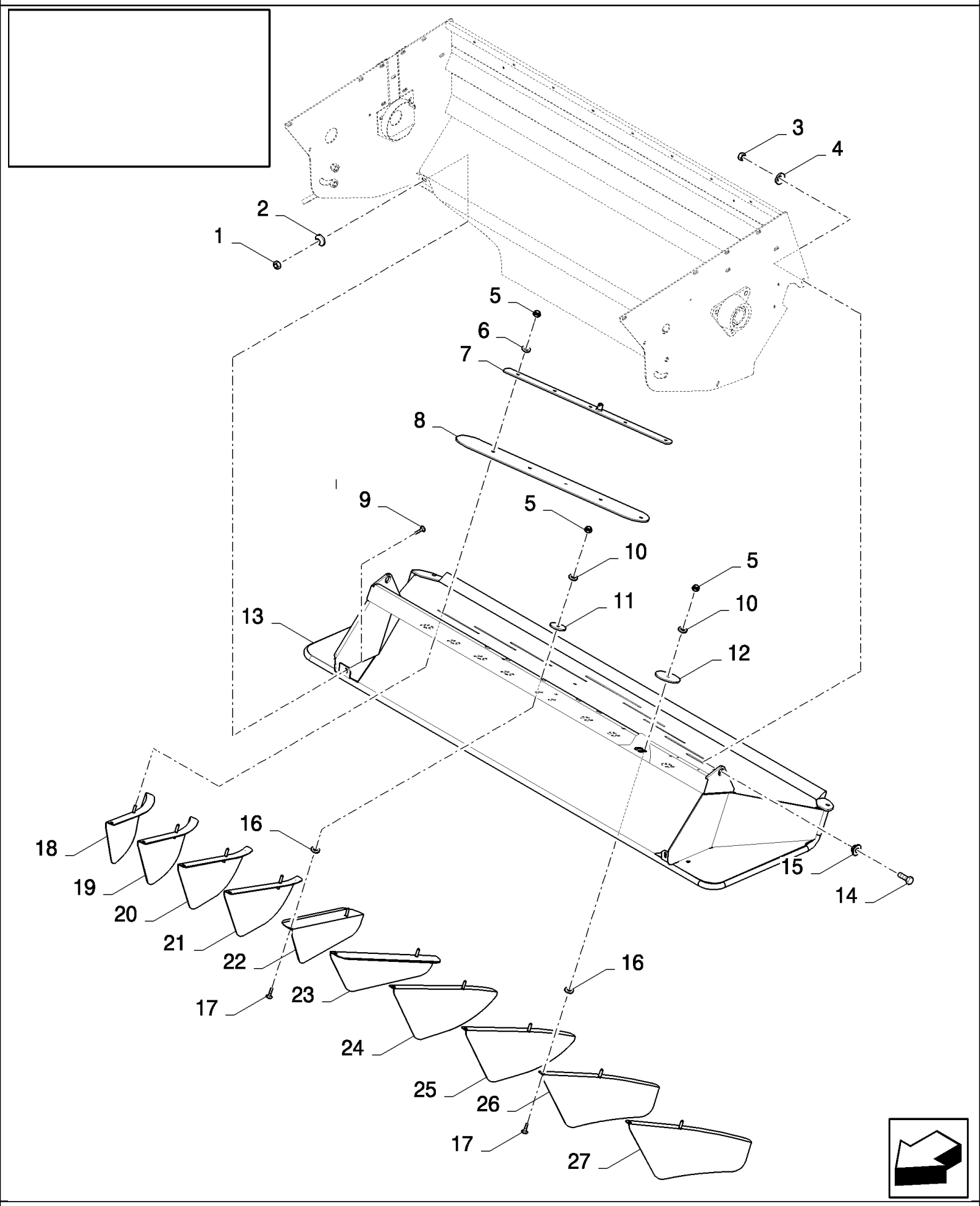

18.84085777(03) STRAWCHOPPER - MANUAL ADJUSTABLE DEFLECTORS

ссылка	Номер детали	Кол-во	Описание
1	89706690	2	NUT, M8, Cl 8,
2	412650	2	WASHER, SPRING, Belleville, M8,
3	100020	2	NUT, M16, Cl 8,
4	140048	2	WASHER, SPRING, Belleville, M16,
5	86629542	20	NUT, LOCK, M8 x 1.25, Cl 8,
6	140016	10	WASHER, M8 x 16 x 1.6,
7	84435482	2	PAD, SLIDING,
8	84065131	2	PAD, SLIDING,
9	86507486	2	BOLT, CARRIAGE, Short NK, M8 x 20, Cl8.8, Full Thd,
10	140041	10	WASHER, M8 x 28 x 3,
11	84435270	2	WASHER,
12	84435269	8	WASHER,
13	84434285	1	FRAME,
14	120090	2	BOLT, Hex, M16 x 50, 8.8,
15	84435443	2	BUSHING,
16	747812	10	WASHER, {PP:80747812} 15MM
17	308761	10	BOLT, CARRIAGE, Short NK, M8 x 25, Cl8.8, Full Thd,
18	84454358	1	DEFLECTOR,
19	84454361	1	DEFLECTOR,
20	84454363	1	DEFLECTOR,
21	84454365	1	DEFLECTOR,
22	84435316	1	DEFLECTOR,
23	84435322	1	DEFLECTOR,
24	84454366	1	DEFLECTOR,
25	84454367	1	DEFLECTOR,
26	84454369	1	DEFLECTOR,
27	84454370	1	DEFLECTOR,

18.84085777(04) STRAWCHOPPER - MANUAL ADJUSTABLE DEFLECTORS

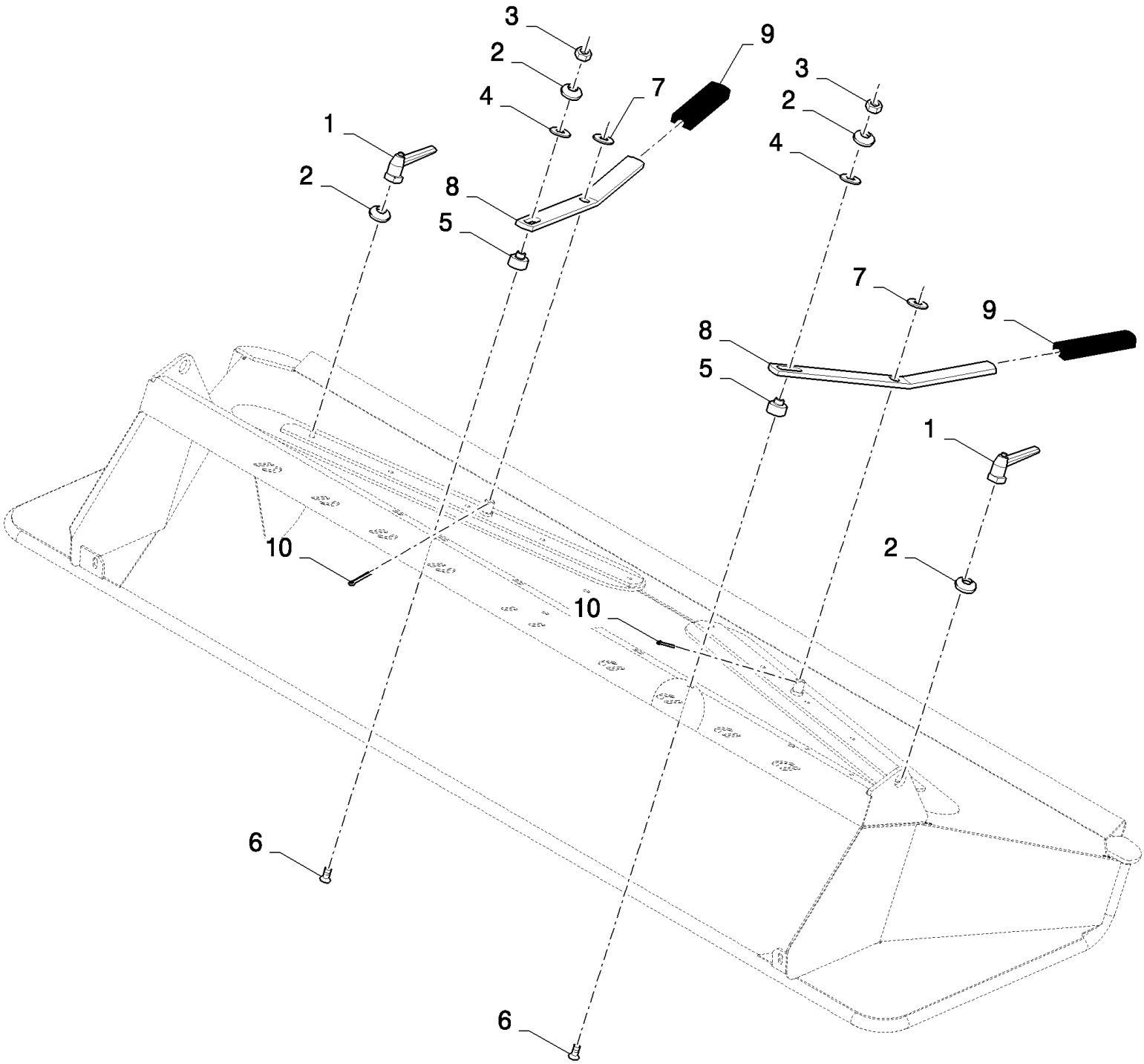

18.84085777(04) STRAWCHOPPER - MANUAL ADJUSTABLE DEFLECTORS

ссылка	Номер детали	Кол-во	Описание
1	84435462	2	HANDLE,
2	322358	4	WASHER, SPRING, Belleville, M8,
3	89706690	2	NUT, M8, Cl 8,
4	140041	2	WASHER, M8 x 28 x 3,
5	84434297	2	BUSHING,
6	84069530	2	SCREW, Hex Soc Flat Hd, M8 x 40, 8.8,
7	378246	2	WASHER, {PP:80378246} 16MM
8	84435478	2	LEVER,
9	84439164	2	HANDLE GRIP,
10	130004	2	PIN, SPLIT (COTTER), {PP:80130004} M3.2 x 25,

18.84085777(05) STRAWCHOPPER - MANUAL ADJUSTABLE DEFLECTORS

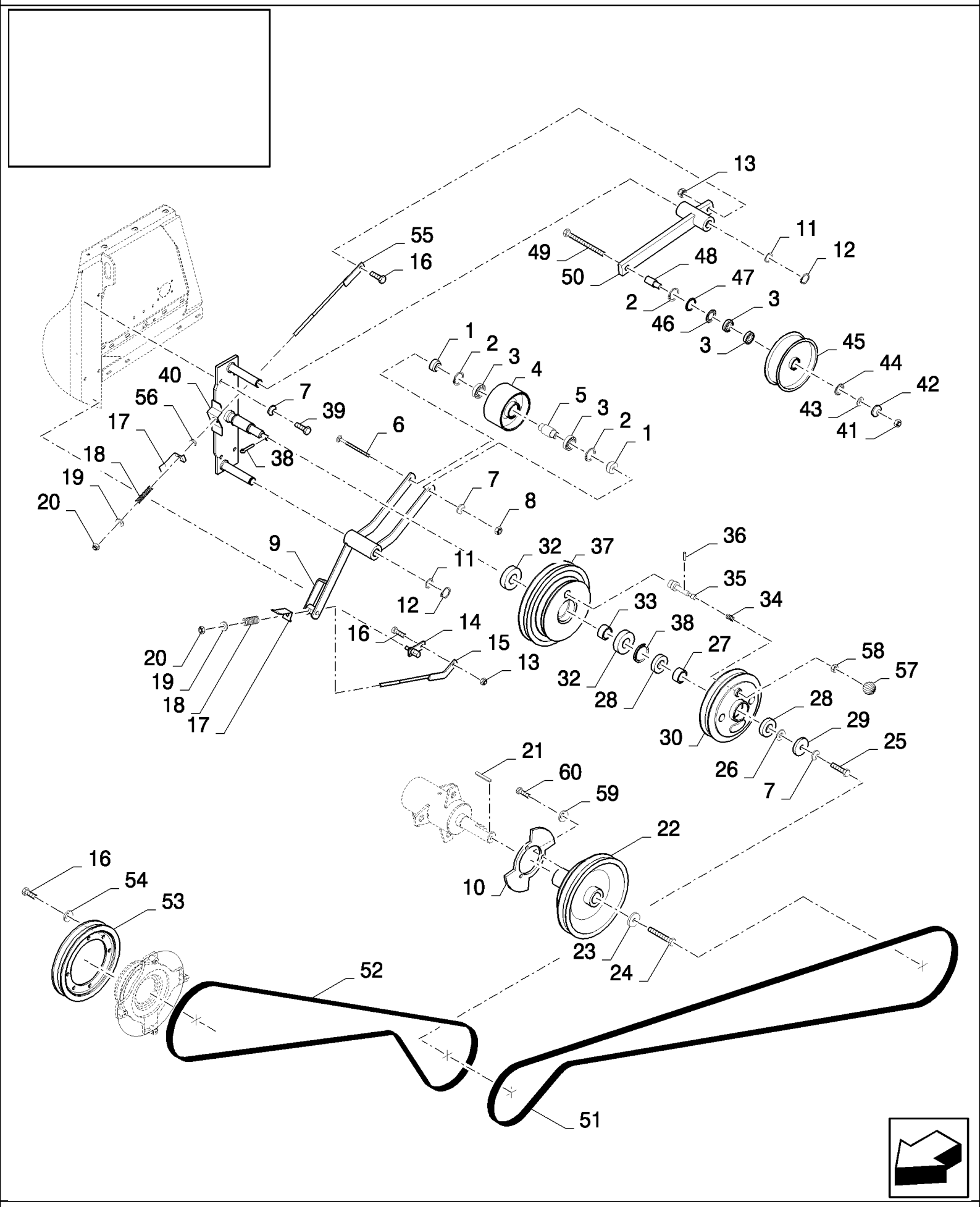

CS660 COMBINE BASE UNIT (1/03-) - Accessories

18.84085777(05) STRAWCHOPPER - MANUAL ADJUSTABLE DEFLECTORS

ссылка	Номер детали	Кол-во	Описание
1	84076275	2	BUSHING,
2	370011	3	RING, SNAP, {PP:80370011} M52, Int,
3	443898	4	BEARING, BALL, {PP:80443898}
4	84334348	1	PULLEY,
5	84076197	1	BUSHING,
6	84053391	1	BOLT, CARRIAGE, Short NK, M12 x 130, Cl8.8,
7	140046	6	WASHER, SPRING, Belleville, M12,
8	9706685	1	NUT, M12, Cl 8,
9	84076317	1	LEVER,
10	84444721	1	RING,
11	84000011	2	WASHER, 30MM
12	370003	2	RING, SNAP, {PP:80370003} M30, Ext,
13	100037	2	NUT, M10 x 1.5, Cl 8,
14	84431514	1	HINGE,
15	84431503	1	ROD,
16	43139	8	SCREW, {PP:80043139} M10x25
17	84431388	2	INDICATOR,
18	84814910	2	SPRING,
19	378245	2	WASHER, M12,
20	412126	2	NUT, LOCK, M12 x 1.75, Cl 8,
21	412341	1	KEY, {PP:80412341}
22	84441435	1	PULLEY,
23	440997	1	WASHER, {PP:80440997} 17MM
24	43168	1	BOLT, Hex, M16 x 40, 8.8,
25	9706687	1	BOLT, {PP:89706687} Hex, M12 x 30, 8.8, M16x1.5
26	327084	1	WASHER, {PP:80327084}
27	84441521	2	RING,
28	913716	2	BEARING, BALL, {PP:80913716}
29	84441824	1	RING,
30	84453029	1	PULLEY,
31	370006	1	RING, SNAP, {PP:80370006}
32	210086	2	BEARING ASSY, {PP:80210086}
33	84441520	1	BUSHING,
34	26538	1	SPRING, {PP:80026538}
35	84444511	1	PIN,
36	14164370	1	PIN, LOCK, M4 x 30, Slotted,
37	84441441	1	PULLEY,
38	84441806	1	RING,
39	300389	4	BOLT, Hex, M12 x 35, 8.8, Full Thd,
40	84441790	1	SUPPORT,
41	100020	1	NUT, M16, Cl 8,
42	140048	1	WASHER, SPRING, Belleville, M16,
43	84440599	1	WASHER,
44	80390515	1	RING,
45	84440508	1	WHEEL, IDLER,

18.84085777(05) STRAWCHOPPER - MANUAL ADJUSTABLE DEFLECTORS

ссылка	Номер детали	Кол-во	Описание
46	391120	1	ELEMENT, SEALING, {PP:80391120}
47	84991773	1	RING,
48	84440601	1	BUSHING,
49	321246	1	BOLT, Hex, M16 x 120, 8.8,
50	84076270	1	LEVER,
51	84076421	1	BELT, TRANSMISSION,
52	84075955	1	BELT, TRANSMISSION,
53	84980735	1	PULLEY,
54	140045	6	WASHER, SPRING, Belleville, M10,
55	84431940	1	ROD,
56	439857	1	BUSHING, {PP:80439857}
57	84453022	1	BUTTON,
58	100016	1	NUT, M10, Cl 8,
59	322357	3	WASHER, SPRING, Belleville, M6,
60	120100	3	BOLT, Hex, M6 x 20, 8.8,
	86557091	0.01	LOCK,
	86503661	0.04	GREASE

18.84085777(06) STRAWCHOPPER - MANUAL ADJUSTABLE DEFLECTORS

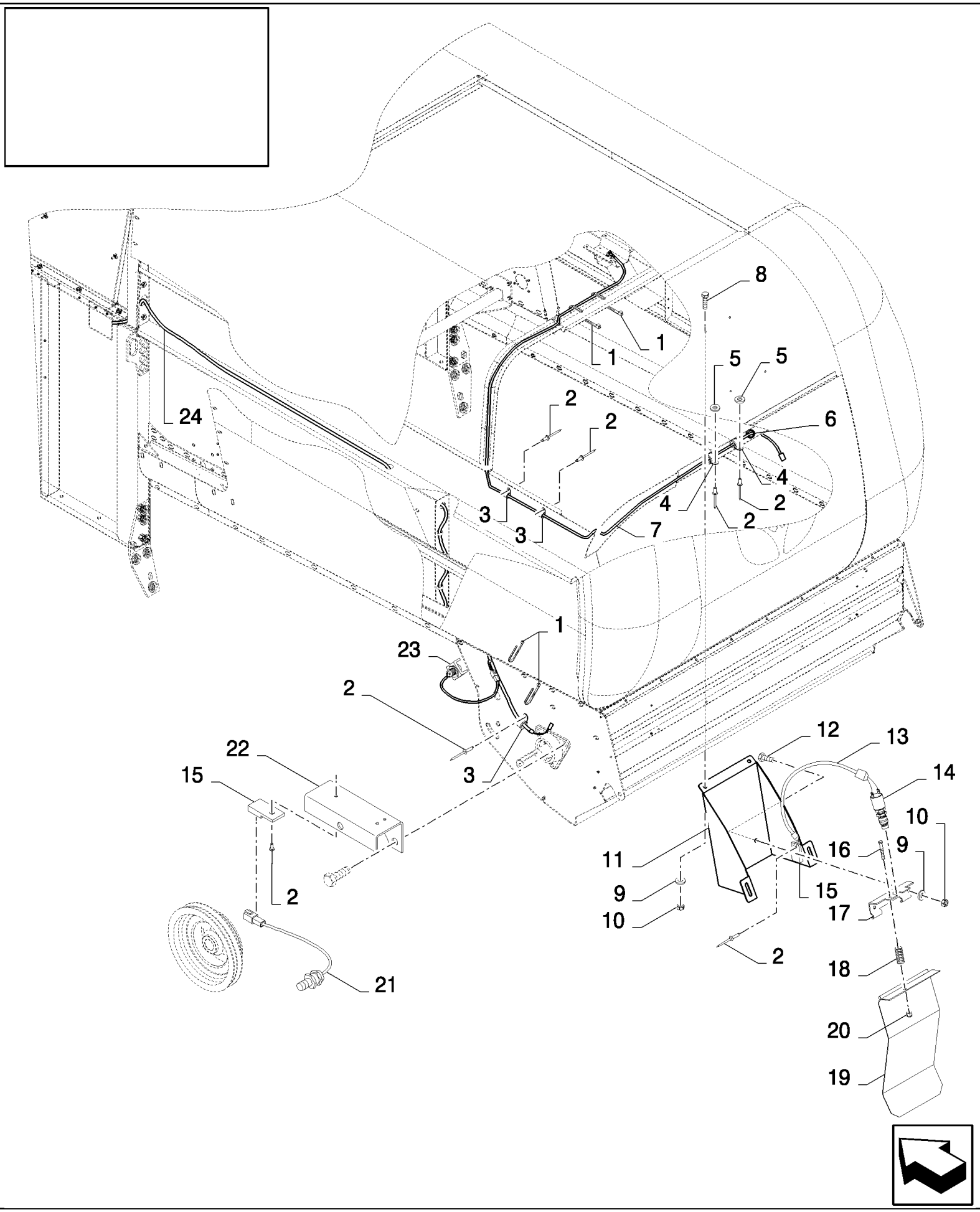

18.84085777(06) STRAWCHOPPER - MANUAL ADJUSTABLE DEFLECTORS

ссылка	Номер детали	Кол-во	Описание
1	89993154	3	CLAMP,
2	445394	2	RIVET, {PP:80445394} Pop, M4.8 x 12.7, Rivet
2	9512290	5	RIVET, {PP:89512290}
3	84818441	3	CLAMP,
4	9507807	2	CLAMP, {PP:89507807}
5	322356	2	WASHER, LOCK, {PP:80322356} 5MM
6	80307016	1	GROMMET,
7	84437319	1	HARNESS, WIRE,
8	86512439	4	BOLT, CARRIAGE, Short NK, M6 x 16, Cl8.8, Full Thd,
9	322357	6	WASHER, SPRING, Belleville, M6,
10	15896221	6	NUT, M6, Cl 10,
11	84441249	1	SUPPORT,
12	86508568	2	BOLT, Hex, M6 x 16, 8.8,
13	84441663	1	HARNESS, WIRE,
14	89818685	1	SWITCH, ASSY,
15	84058832	2	CLIP,
16	120056	1	BOLT, Hex, M6 x 50, 8.8,
17	84015986	1	HINGE,
18	84005450	1	SPRING,
19	84015983	1	PLATE, COVER,
20	353308	1	NUT, LOCK, M6 x 1, Cl 8,
21	84058861	1	SENSOR,
22	84444723	1	BRACKET,
23	84058860	1	SENSOR,
24	84444962	1	HARNESS, WIRE,
	80401278		SEAL, L=1120MM

18.84085777(07) STRAWCHOPPER - MANUAL ADJUSTABLE DEFLECTORS

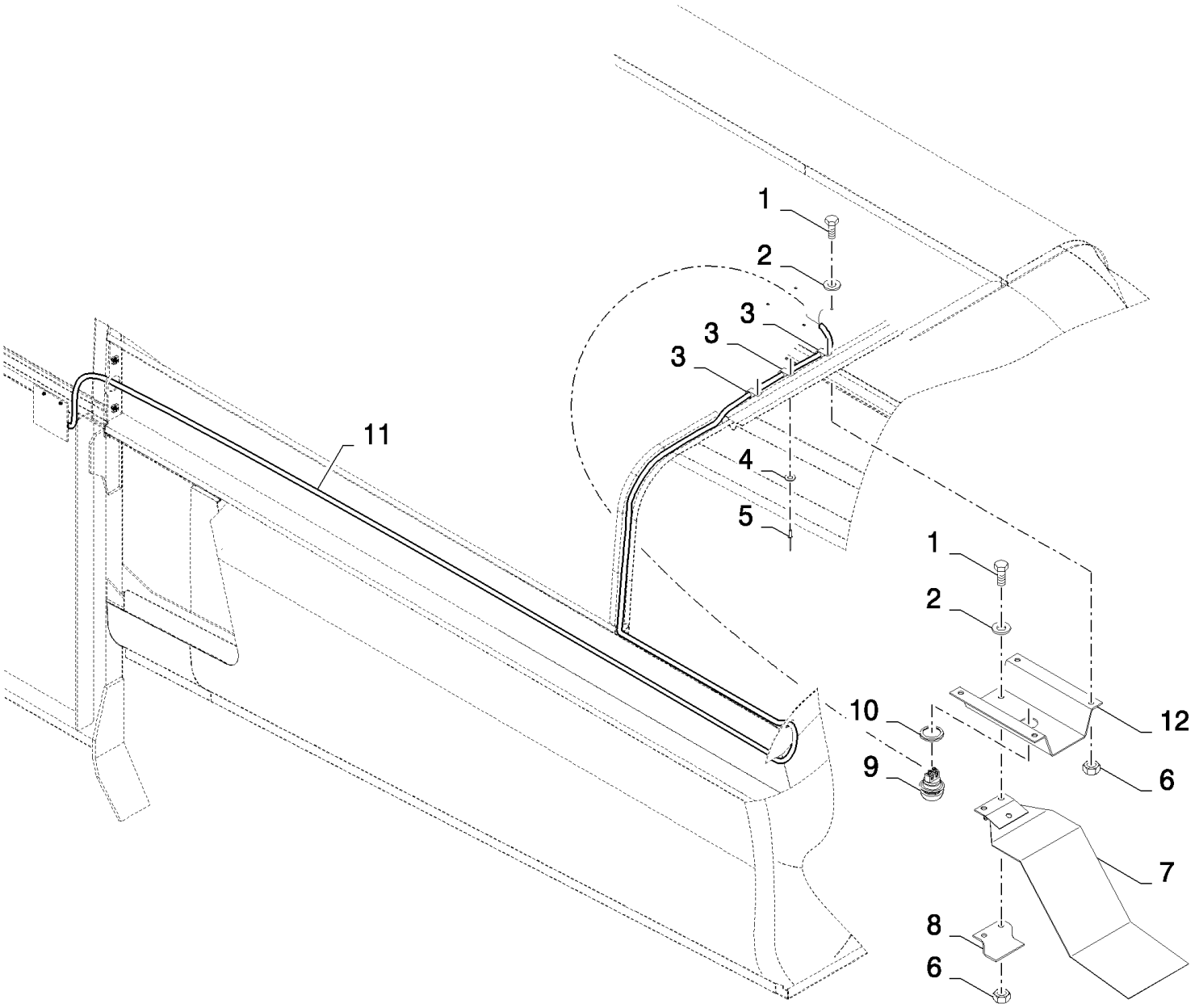

CS660 COMBINE BASE UNIT (1/03-) - Accessories

18.84085777(07) STRAWCHOPPER - MANUAL ADJUSTABLE DEFLECTORS

ссылка	Номер детали	Кол-во	Описание
1	86508568	6	BOLT, Hex, M6 x 16, 8.8,
2	322357	6	WASHER, SPRING, Belleville, M6,
3	9507807	3	CLAMP, {PP:89507807}
4	322356	3	WASHER, LOCK, {PP:80322356} 5MM
5	89512289	3	RIVET, Rivet
6	15896221	6	NUT, M6, Cl 10,
7	417790	1	SUPPORT, {PP:80417790}
8	417793	1	SUPPORT, {PP:80417793}
9	335378	1	PUSH BUTTON, {PP:80335378}
10	397986	1	CUP, {PP:80397986}
11	84437313	1	HARNESS, WIRE,
12	417792	1	SUPPORT, {PP:80417792}

18.84085821(01) STUBBLE & ADDITIONAL WORKLIGHTS

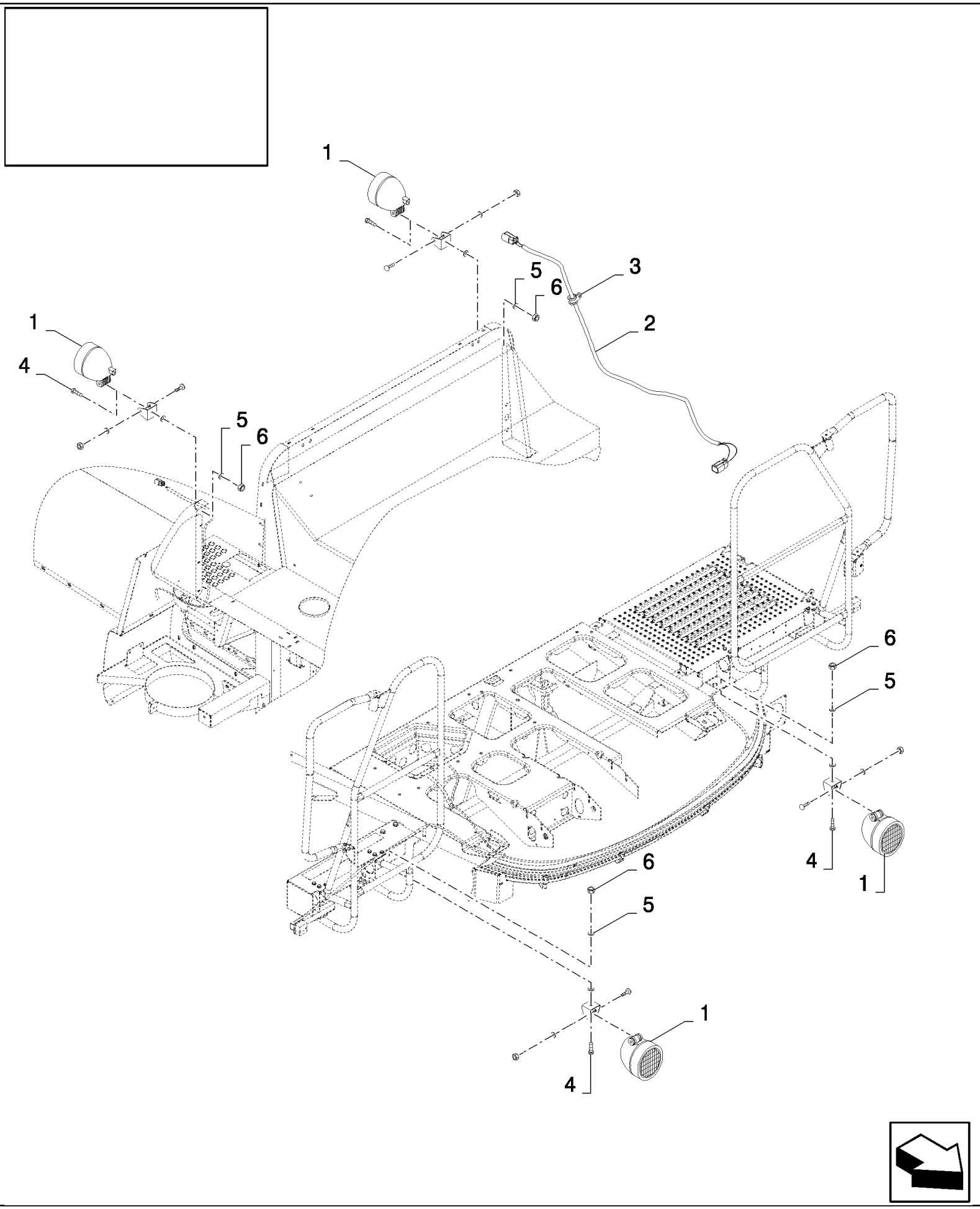

CS660 COMBINE BASE UNIT (1/03-) - Accessories

18.84085821(01) STUBBLE & ADDITIONAL WORKLIGHTS

ссылка	Номер детали	Кол-во	Описание
	84085821		DIA KIT, HARVESTER,
1	84607497	4	LAMP,
2	84437327	1	HARNESS, WIRE,
3	272535	5	CLAMP, {PP:80272535} 1/8", Insul, 1/4" Bolt,
4	43139	4	SCREW, {PP:80043139} M10x25
5	86511323	4	WASHER, M10 x 20 x 2,
6	100037	4	NUT, M10 x 1.5, Cl 8,

18.84085824(01) FIXED HEADER TRAILER HITCH - SPAIN & ITALY

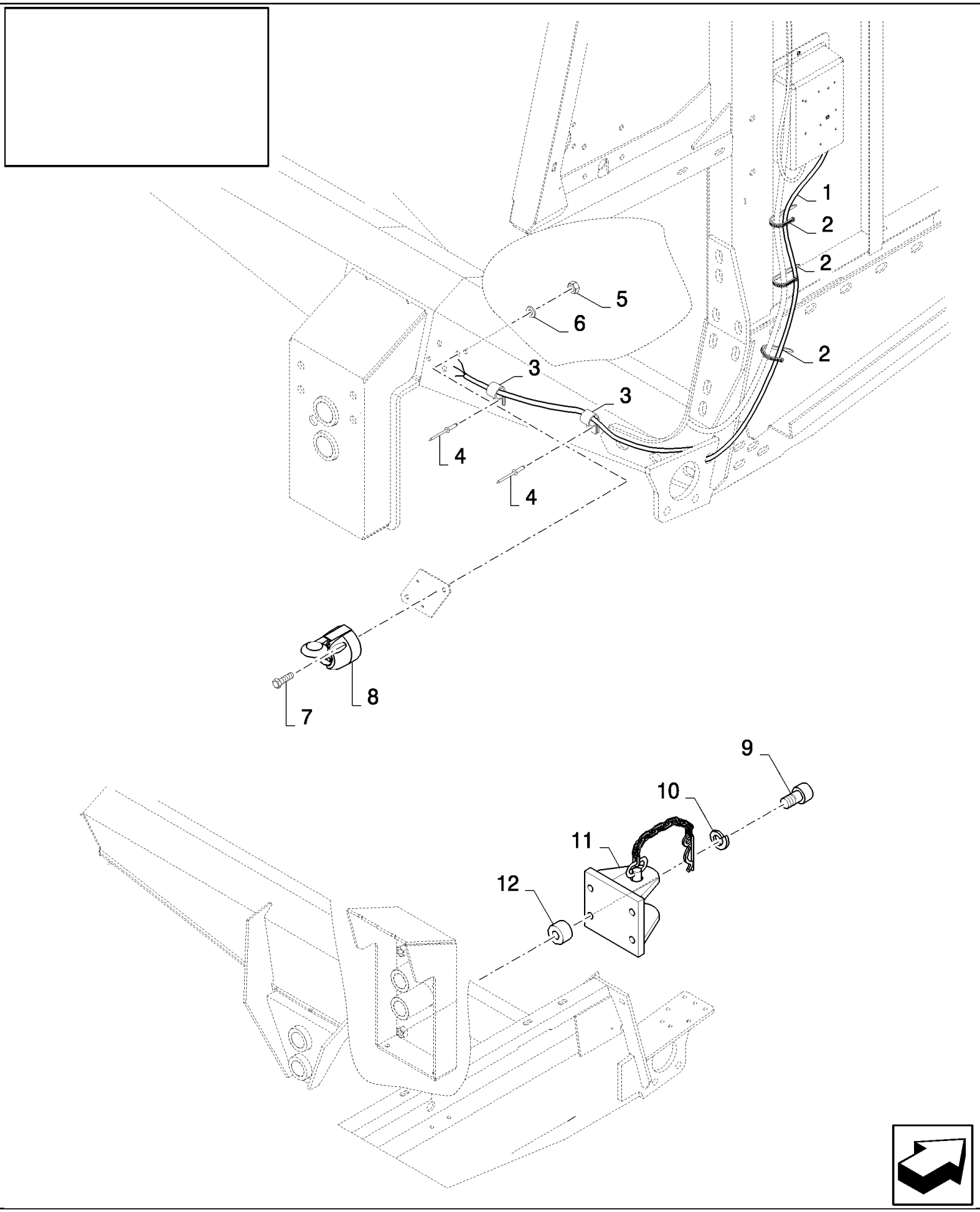

CS660 COMBINE BASE UNIT (1/03-) - Accessories

18.84085824(01) FIXED HEADER TRAILER HITCH - SPAIN & ITALY

ссылка	Номер детали	Кол-во	Описание
	84085824		DIA KIT, HARVESTER,
1	84437294	1	HARNESS, WIRE,
2	89993154	5	CLAMP,
3	9503929	2	CLAMP, {PP:89503929}
4	9512290	2	RIVET, {PP:89512290}
5	100012	3	NUT, M4, Cl 8,
6	322355	3	WASHER, SPRING, Belleville, M4,
7	86585707	3	SCREW, Cross Pan Hd, M4 x 35, M4x35
8	398224	1	SOCKET, POWER, {PP:80398224}
9	9838120	4	SCREW, {PP:89838120}
10	87016618	4	WASHER, LOCK, M16, M16
11	84400985	1	HITCH,
12	355392	4	SPACER, {PP:80355392}
	84433130	1	DECAL,

18.84085826(01) ROTATION HEADER TRAILER HITCH

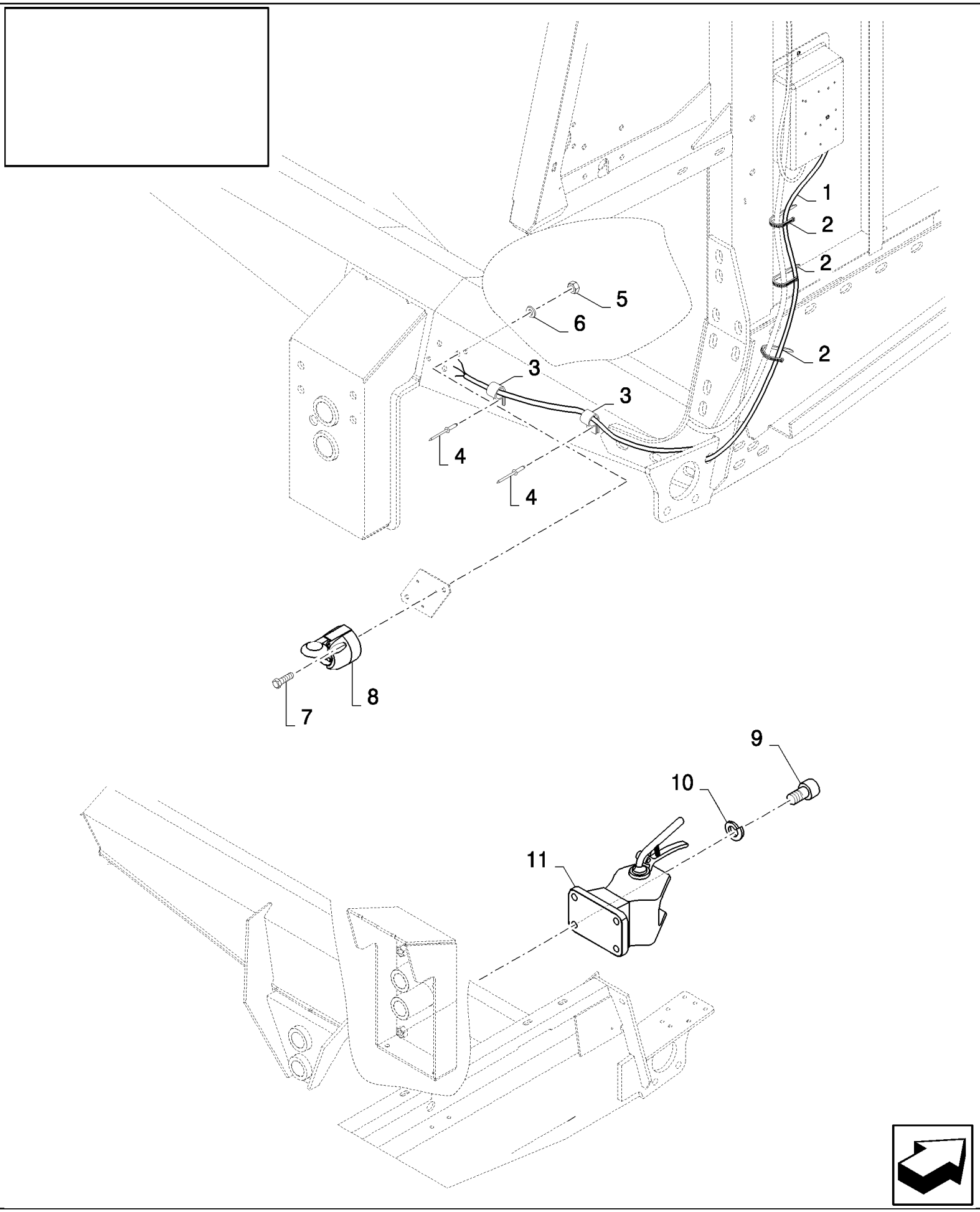

CS660 COMBINE BASE UNIT (1/03-) - Accessories

18.84085826(01) ROTATION HEADER TRAILER HITCH

ссылка	Номер детали	Кол-во	Описание
	84085826		DIA KIT, HARVESTER,
1	84437294	1	HARNESS, WIRE,
2	89993154	5	CLAMP,
3	9503929	2	CLAMP, {PP:89503929}
4	9512290	2	RIVET, {PP:89512290} RIVET
5	100012	3	NUT, M4, Cl 8,
6	322355	3	WASHER, SPRING, Belleville, M4,
7	86585707	3	SCREW, Cross Pan Hd, M4 x 35, M4x35
8	398224	1	SOCKET, POWER, {PP:80398224}
9	9817243	4	SCREW, {PP:89817243} Hex Soc Hd, M16 x 50, 12.9, M16x50
10	87016618	4	WASHER, LOCK, M16, M16
11	84607012	1	TOW HOOK,
	84334828	1	DECAL,
	84433130	1	DECAL,

18.84085849(01) AXLE EXTENSION KIT

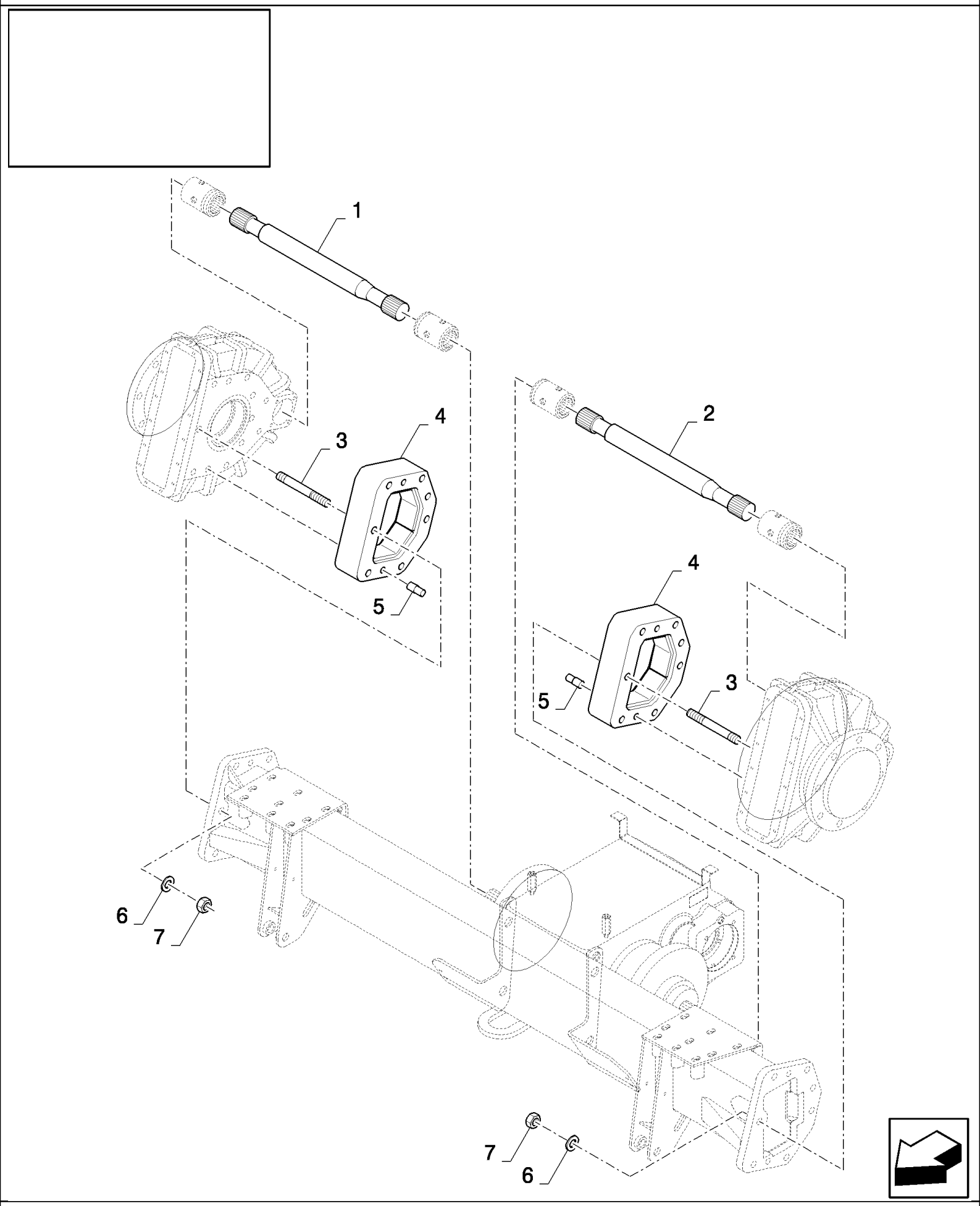

18.84085849(01) AXLE EXTENSION KIT

ссылка	Номер детали	Кол-во	Описание
	84085849		DIA KIT, HARVESTER,
1	84449075	1	SHAFT, CONTROL,
2	84449072	1	SHAFT, CONTROL,
3	84448850	16	STUD,
4	84448890	2	EXTENSION,
5	84448920	4	PIN,
6	394632	16	WASHER, M20 x 40 x 4, HT,
7	9847024	16	NUT, M20, Cl 10,
	80401624	0.006	LOCTITE

18.84085882(01) VERTICAL KNIFE ELECTRICITY KIT

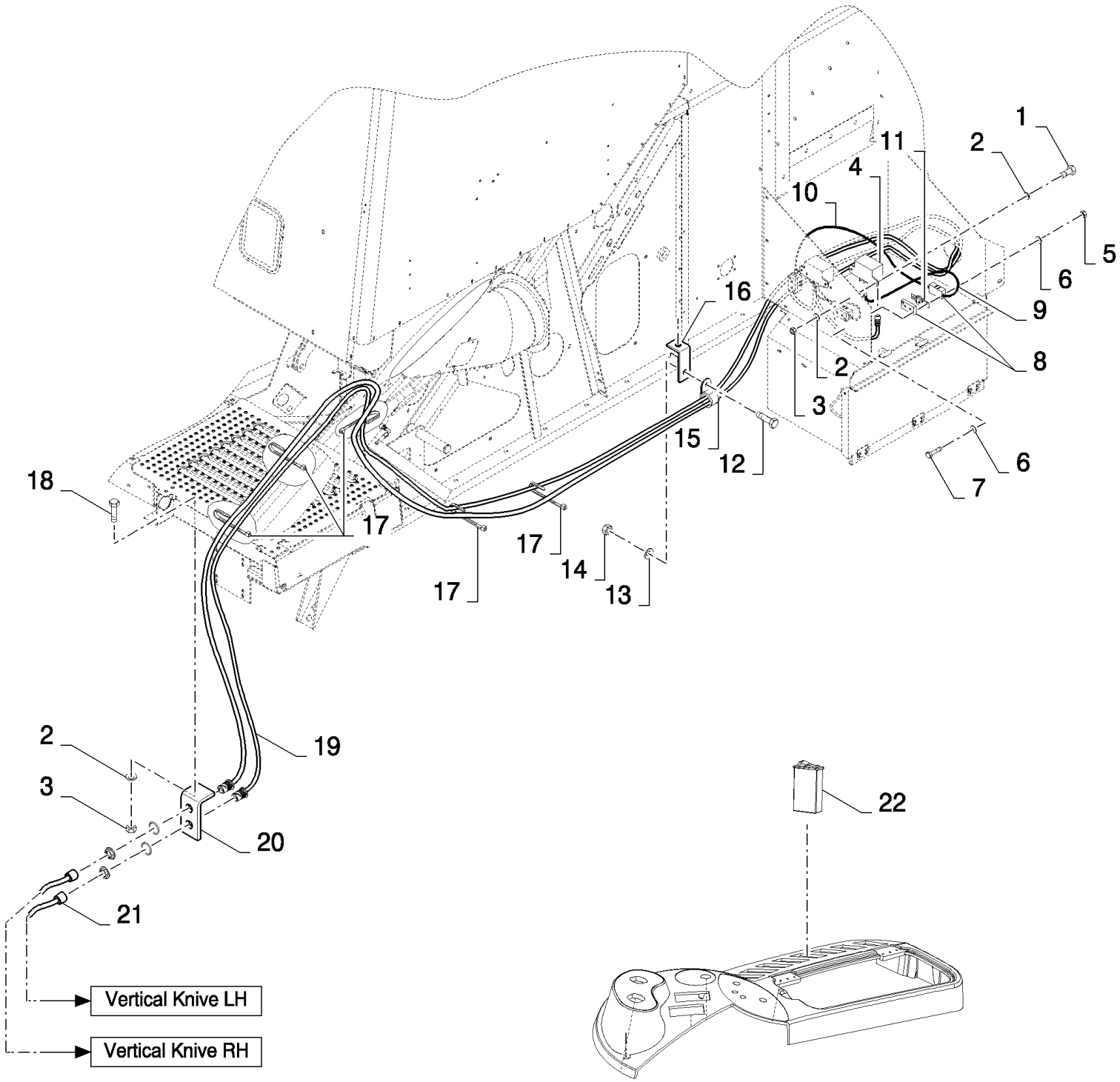

CS660 COMBINE BASE UNIT (1/03-) - Accessories

18.84085882(01) VERTICAL KNIFE ELECTRICITY KIT

ссылка	Номер детали	Кол-во	Описание
	84085882		VERTICAL KNIFE ELECTRICIT,
1	86508568	2	BOLT, Hex, M6 x 16, 8.8,
2	322357	5	WASHER, SPRING, Belleville, M6,
3	15896221	3	NUT, M6, Cl 10,
4	86619908	1	RELAY,
5	86508812	2	NUT, M3, Cl 8,
6	86509827	4	WASHER, LOCK, M3,
7	86511816	2	SCREW, Cross Pan Hd, M3 x 16,
8	84078784	1	FUSE HOLDER,
9	84444505	1	HARNESS, WIRE,
10	84444504	1	HARNESS, WIRE,
11	84320118	1	FUSE, 40A
12	120104	2	BOLT, Hex, M8 x 20, 8.8,
13	322358	2	WASHER, SPRING, Belleville, M8,
14	89706690	2	NUT, M8, Cl 8,
15	9513271	1	CLAMP, {PP:89513271}
16	84446966	1	BRACKET,
17	89993154	8	CLAMP,
18	120100	1	BOLT, Hex, M6 x 20, 8.8,
19	84444502	1	HARNESS, WIRE,
20	84444610	1	BRACKET,
21	84444503	1	HARNESS, WIRE,
22	84400442	1	SWITCH,

18.84085884(01) ADDITIONAL PORTABLE WORK LIGHT

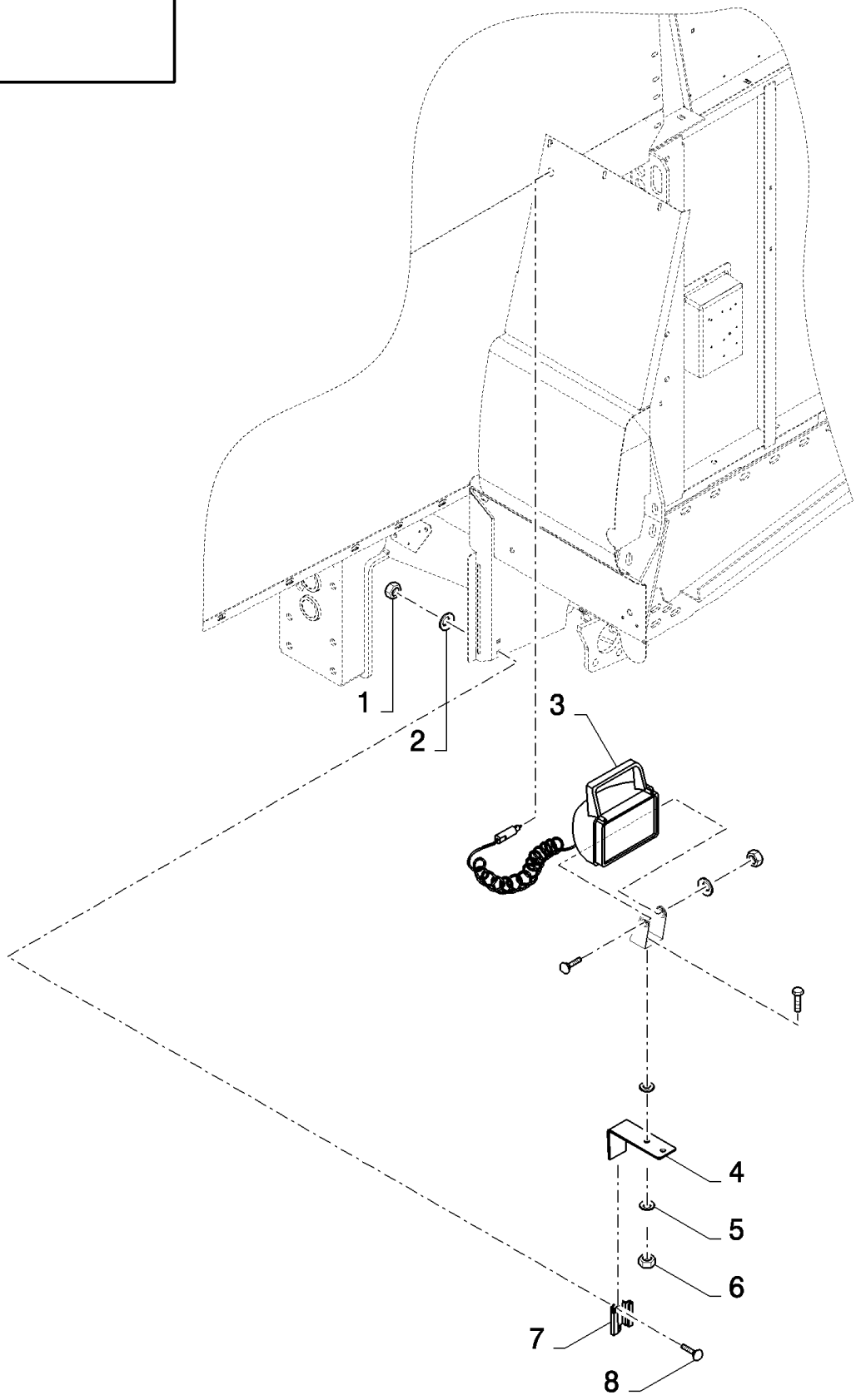

18.84085884(01) ADDITIONAL PORTABLE WORK LIGHT

ссылка	Номер детали	Кол-во	Описание
	84085884		DIA KIT, HARVESTER,
1	89706690	4	NUT, M8, Cl 8,
2	322358	4	WASHER, SPRING, Belleville, M8,
3	84004176	1	LAMP, WORK,
4	9813909	1	SUPPORT, {PP:89813909}
5	140045	1	WASHER, SPRING, Belleville, M10,
6	100016	1	NUT, M10, Cl 8,
7	9837606	2	CLIP, {PP:89837606}
8	86619060	4	BOLT, CARRIAGE, Short NK, M8 x 16, Cl8.8, Full Thd,

CS660 COMBINE BASE UNIT (1/03-) - Accessories

18.84085886(01) FIRE EXTINGUISHER

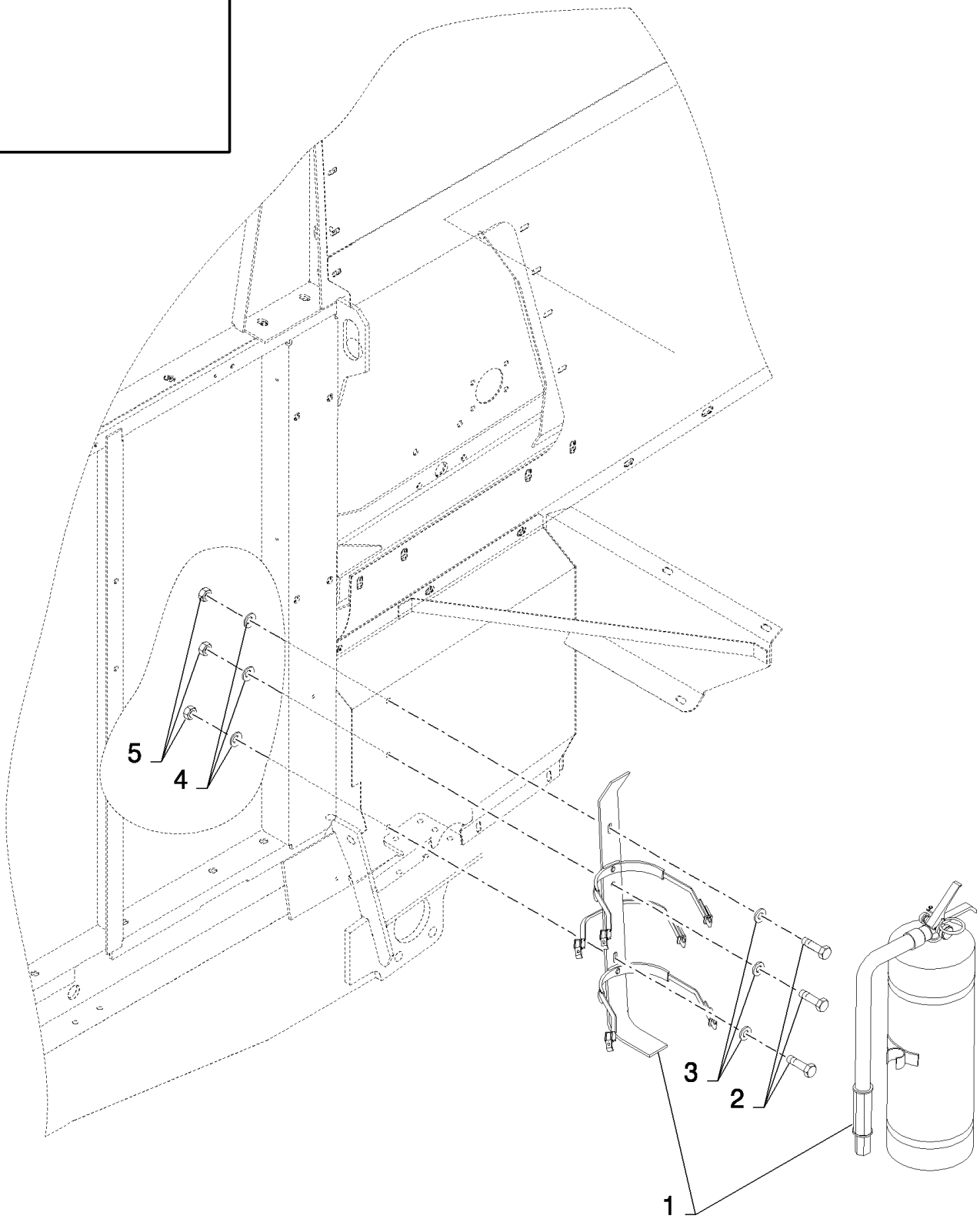

18.84085886(01) FIRE EXTINGUISHER

ссылка	Номер детали	Кол-во	Описание
	84085886		DIA KIT, HARVESTER,
1	84440547	1	FIRE EXTINGUISHER,
2	120104	3	BOLT, Hex, M8 x 20, 8.8,
3	140016	3	WASHER, M8 x 16 x 1.6,
4	412650	3	WASHER, SPRING, Belleville, M8,
5	89706690	3	NUT, M8, Cl 8,

18.84085888(01) REAR VIEW MIRROR

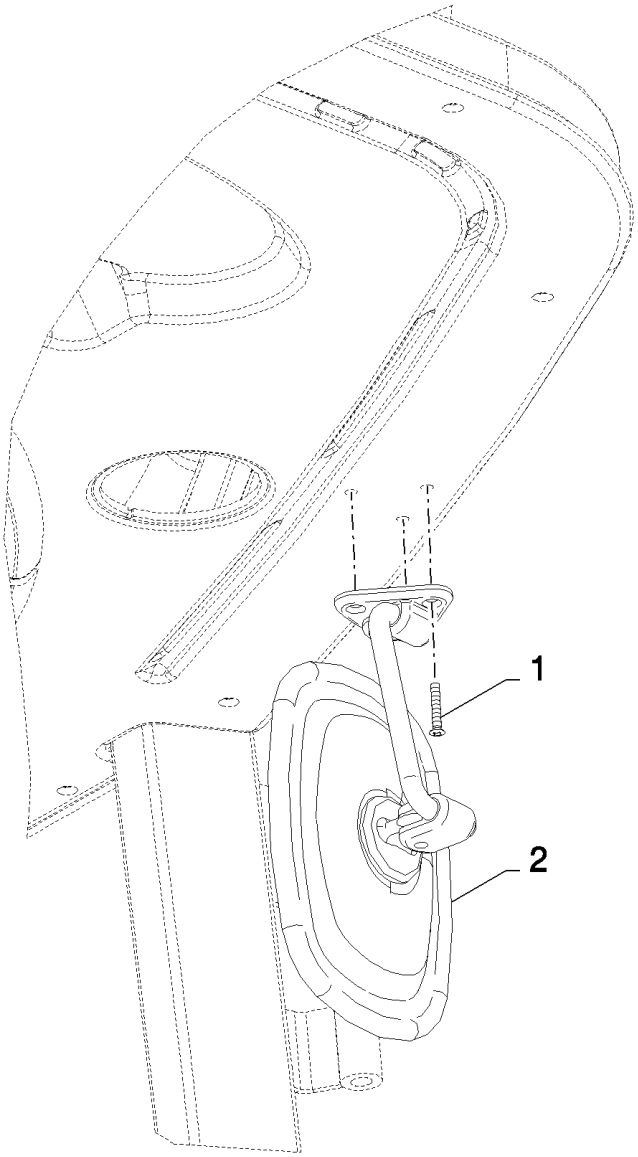

18.84085888(01) REAR VIEW MIRROR

ссылка	Номер детали	Кол-во	Описание
	84085888		DIA KIT, HARVESTER,
1	412477	3	SCREW, {PP:80412477} Cross Oval Hd, M4 x 25, M4x25
2	84400453	1	MIRROR, REAR-VIEW,

18.84085893(01) BEACONS (2)

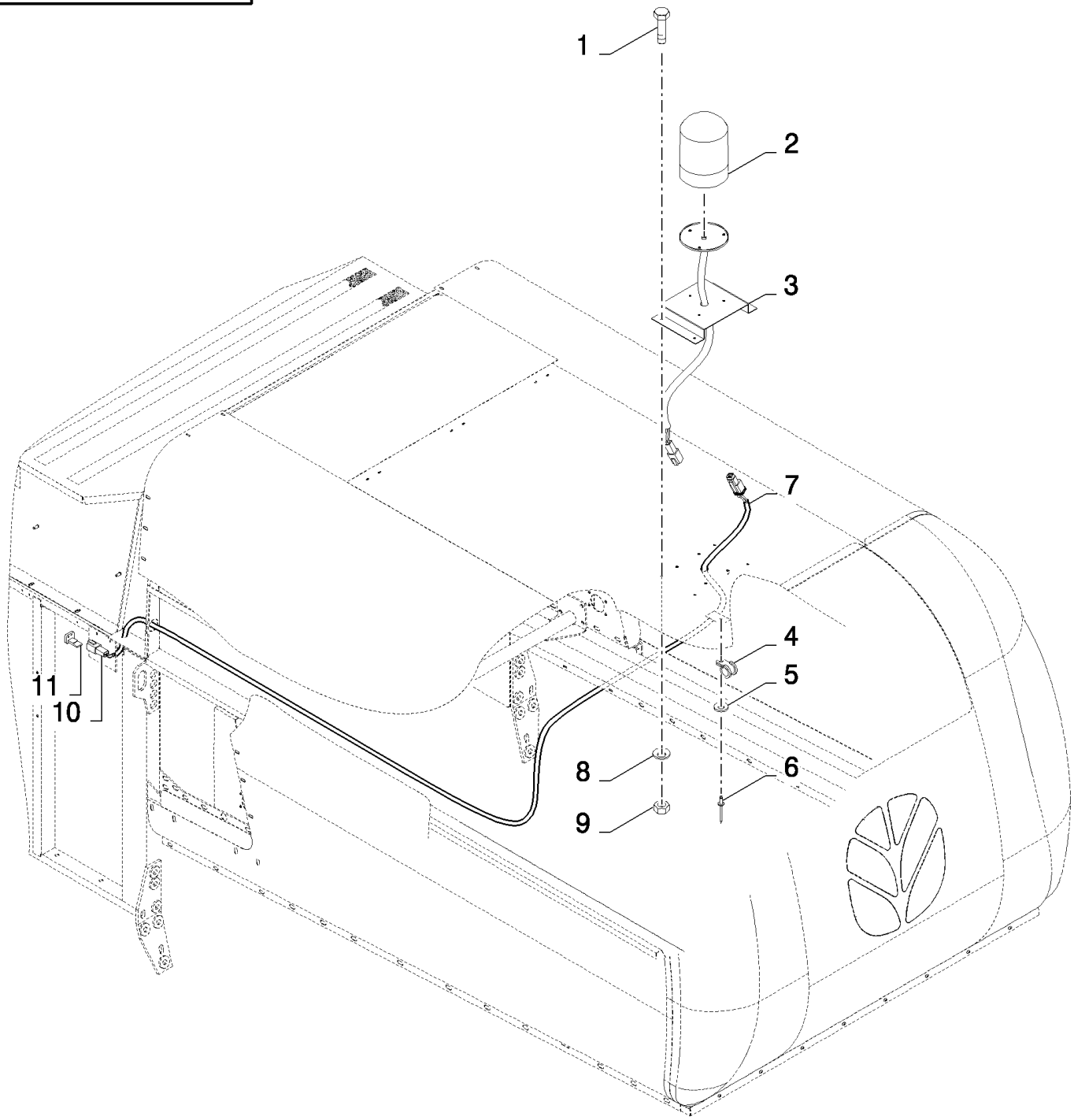

CS660 COMBINE BASE UNIT (1/03-) - Accessories

18.84085893(01) BEACONS (2)

ссылка	Номер детали	Кол-во	Описание
	84085893		DIA KIT, HARVESTER,
1	120100	4	BOLT, Hex, M6 x 20, 8.8,
2	84067911	1	BEACON, , BSN C479
2	87050694	1	BEACON, , ASN D480
3	84439613	1	SUPPORT,
4	9507807	3	CLAMP,
5	322356	3	WASHER, LOCK, 5MM
6	89512289	3	RIVET, Rivet
7	84437323	1	HARNESS, WIRE,
8	322357	4	WASHER, SPRING, Belleville, M6,
9	15896221	4	NUT, M6, Cl 10,
10	84074630	1	CONNECTOR, WIRE,
11	86500166	1	PLUG,
	80401624	0.03	

18.84085893(02) BEACONS (2)

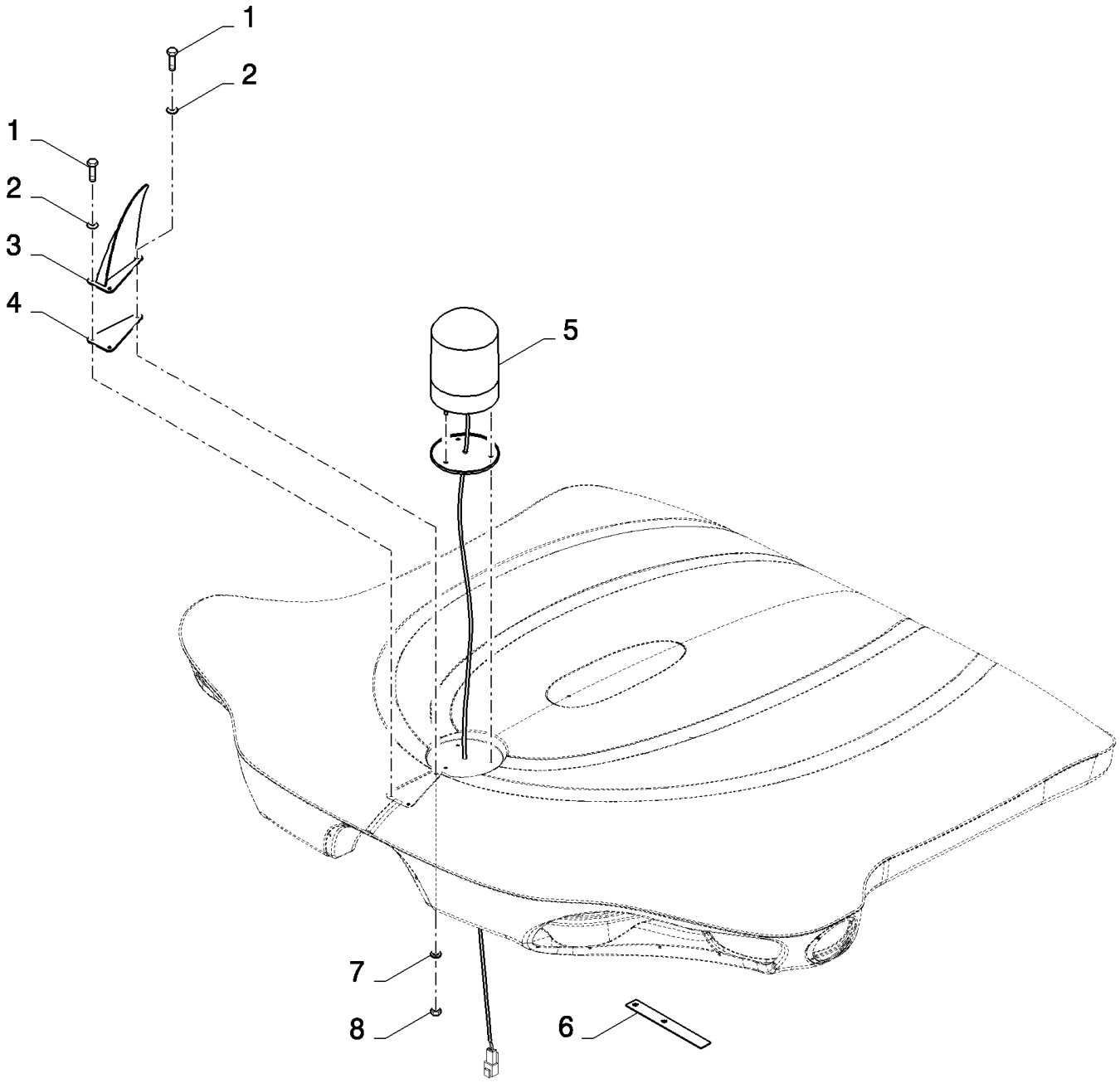

CS660 COMBINE BASE UNIT (1/03-) - Accessories

18.84085893(02) BEACONS (2)

ссылка	Номер детали	Кол-во	Описание
1	43117	3	BOLT, Hex, M6 x 30, 8.8,
2	9824259	3	WASHER, M6 x 12 x 1.6,
3	84801125	1	PLATE,
4	84443967	1	SEAL,
5	84067911	1	BEACON, , BSN C479
5	87050694	1	BEACON, , ASN D480
6	84807642	1	PLATE, FIXING,
7	84007539	4	WASHER, 6MM
8	15896221	4	NUT, M6, Cl 10,

18.84085898(01) WINDSCREEN WASHER KIT

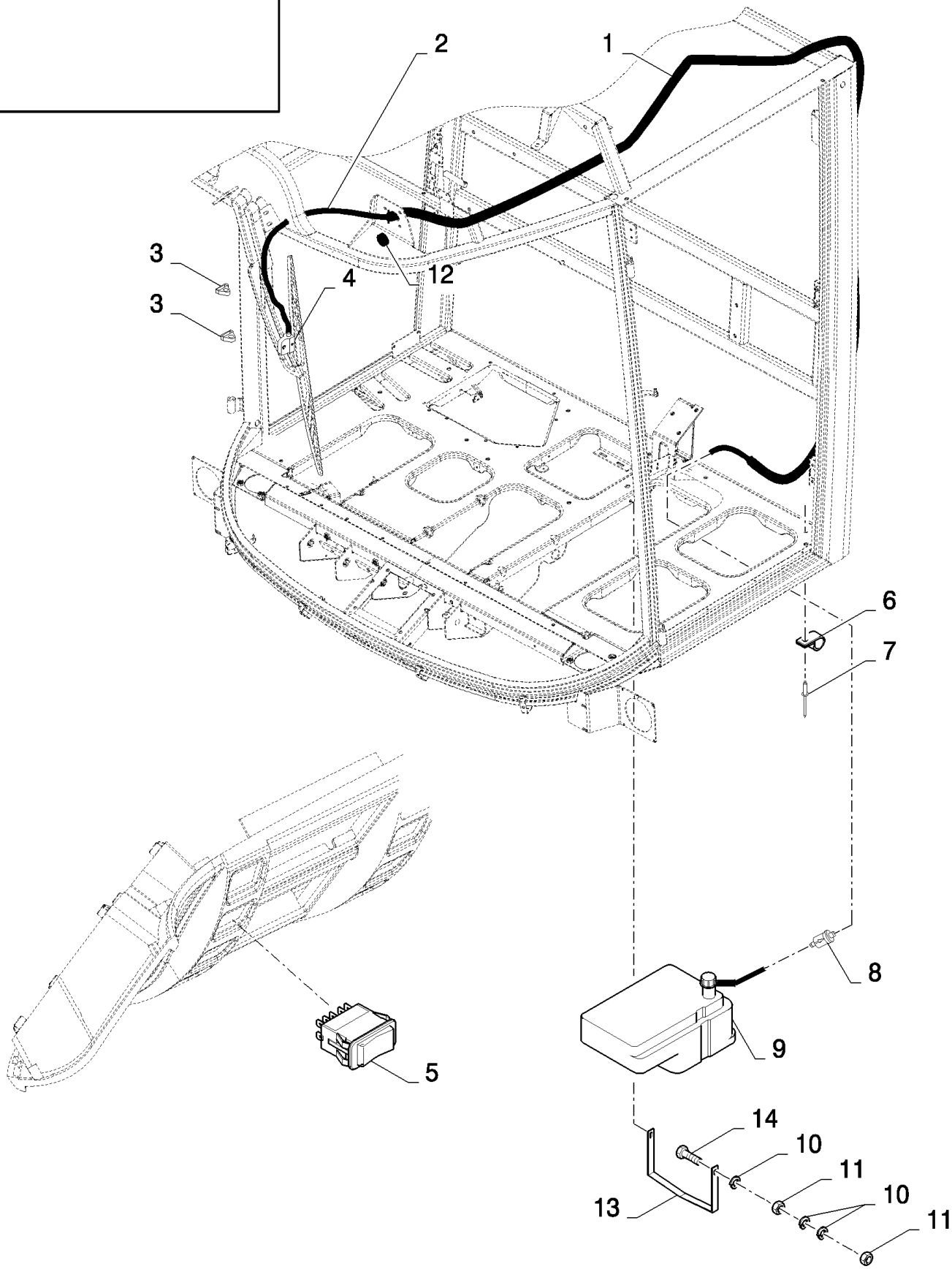

CS660 COMBINE BASE UNIT (1/03-) - Accessories

18.84085898(01) WINDSCREEN WASHER KIT

ссылка	Номер детали	Кол-во	Описание
	84085898		DIA KIT, HARVESTER,
1	89507813	1	L=3.3M
2	84037518	1	HOSE, L=6M
3	84442498	4	CLIP,
4	84442497	1	NOZZLE,
5	84320665	1	SWITCH,
6	84818443	2	CLAMP,
7	9512968	2	RIVET, Rivet
8	84037530	1	VALVE, CHECK,
9	84002498	1	RESERVOIR, WINDSH. WASH,
10	322357	6	WASHER, SPRING, Belleville, M6,
11	15896221	4	NUT, M6, Cl 10,
12	46288	1	GROMMET, {PP:80046288}
13	84002499	1	CLAMP,
14	86977786	2	BOLT, Hex, M6 x 25, 8.8,
	89513508	2	WATER
	80401269	0.001	GLYCERINE
	85700895	2	ANTI-FREEZE

18.84085918(01) HEATING - CAB

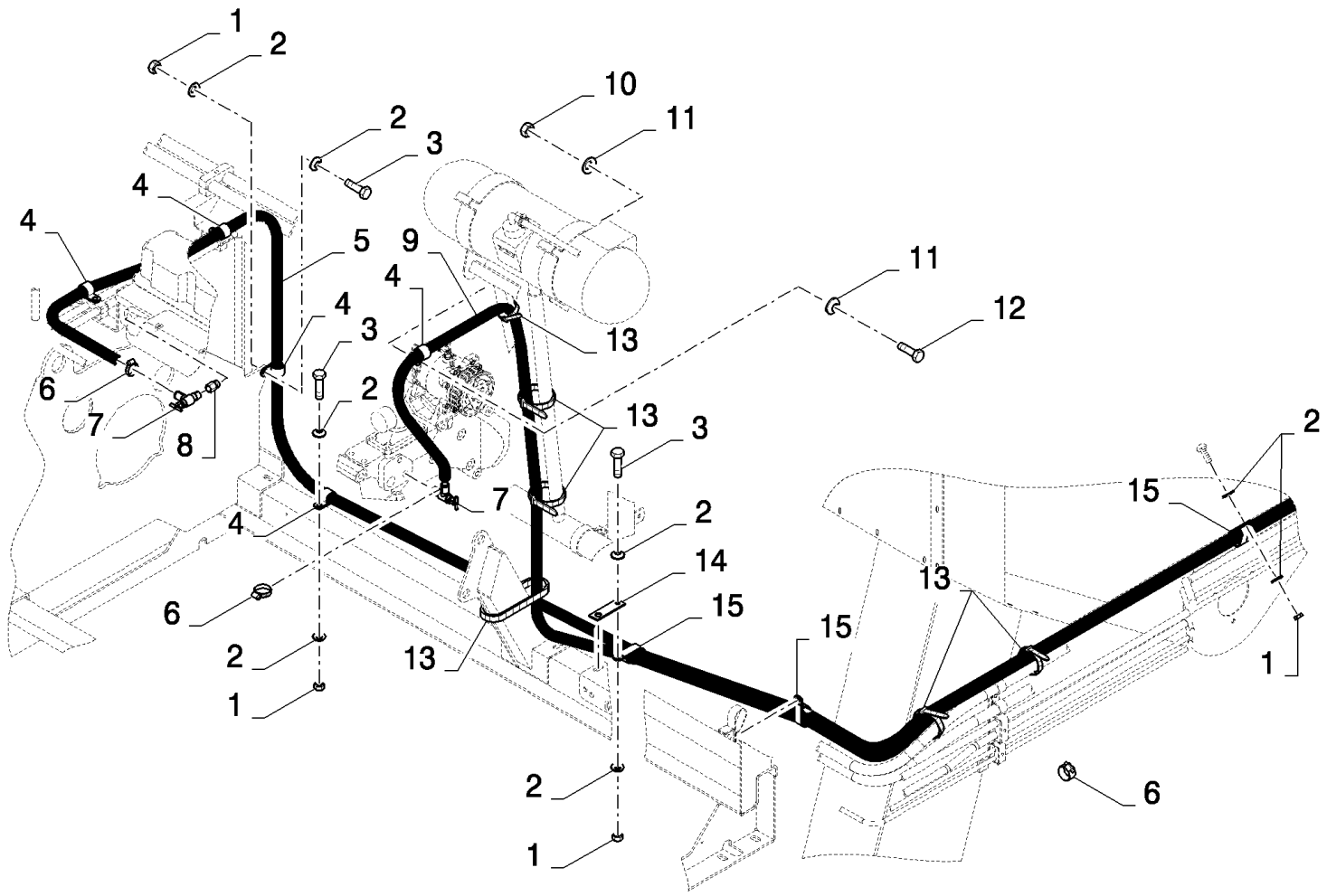

CS660 COMBINE BASE UNIT (1/03-) - Accessories

18.84085918(01) HEATING - CAB

ссылка	Номер детали	Кол-во	Описание
	84085918		DIA KIT, HARVESTER,
1	15896221	8	NUT, M6, Cl 10,
2	322357	16	WASHER, SPRING, Belleville, M6,
3	86977786	3	BOLT, Hex, M6 x 25, 8.8,
4	9827902	5	CLAMP, {PP:89827902} 1", Insul, 3/8" Bolt,
5	84607279	1	HOSE, L=6.8M
6	326082	4	CLAMP, {PP:80326082}
7	83961305	2	VALVE, SHUT-OFF,
8	918688	1	CONNECTOR, HYD., {PP:80918688}
9	84607280	1	HOSE, L=5.6M
10	89706690	1	NUT, M8, Cl 8,
11	322358	2	WASHER, SPRING, Belleville, M8,
12	300381	1	BOLT, {PP:80300381} Hex, M8 x 35, 8.8, M8x35
13	89994404	6	CLIP, HOSE,
14	84022413	1	SUPPORT,
15	9513271	7	CLAMP, {PP:89513271}
	80400981	0.01	

18.84085918(02) HEATING - CAB

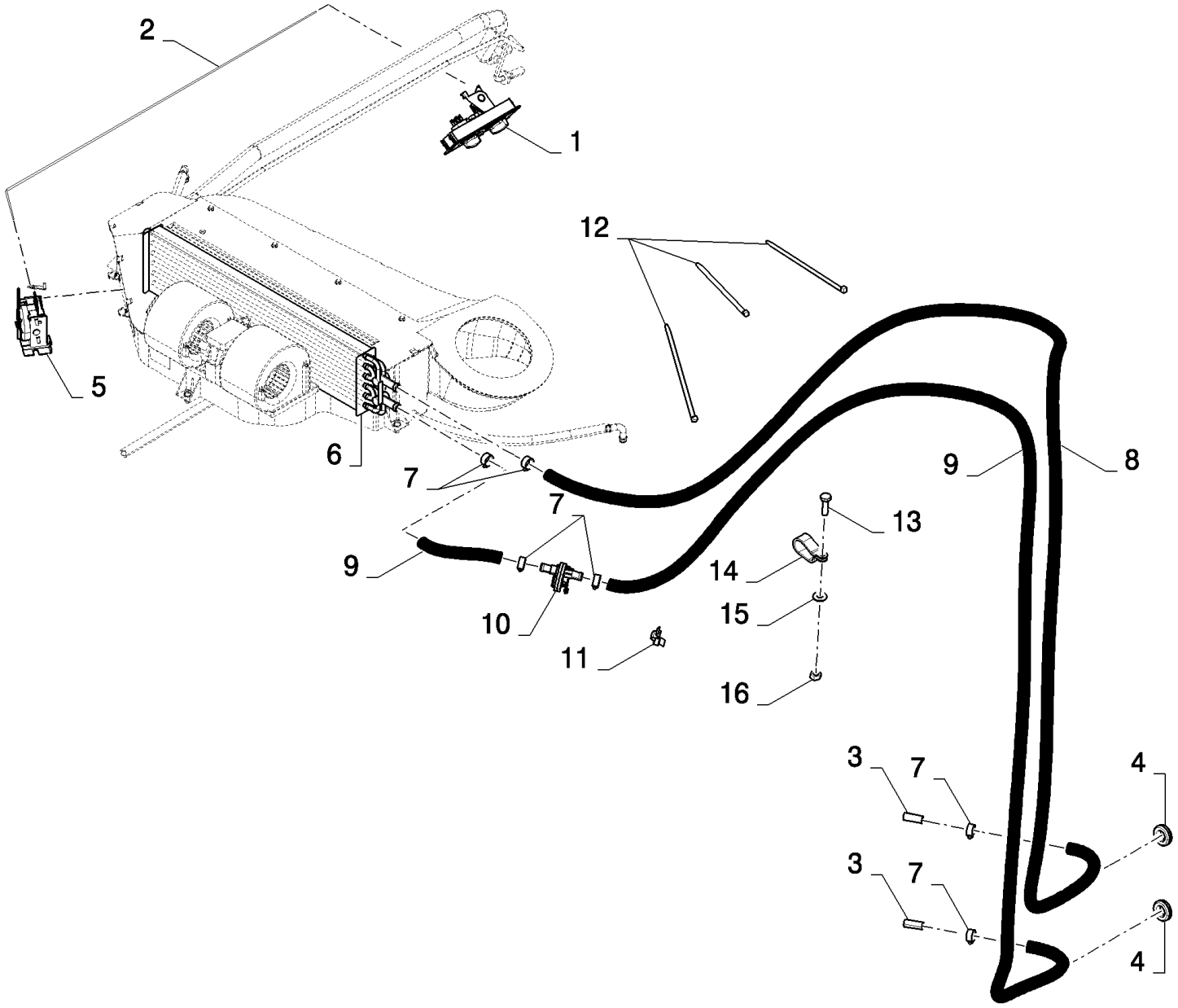

CS660 COMBINE BASE UNIT (1/03-) - Accessories

18.84085918(02) HEATING - CAB

ссылка	Номер детали	Кол-во	Описание
1	84607105	1	ELECTRONIC UNIT, CONTROL, , BSN C491
1	87354648	1	PANEL, CONTROL, , ASN D492
2	84814476	1	CABLE, , BSN C491
2	87383765	1	CABLE, , ASN D492
3	89994350	2	CONNECTOR, HYD.,
4	173011	2	GROMMET,
5	84814477	1	SWITCH, THERMOSTATIC,
6	84814478	1	COIL,
7	326082	6	CLAMP,
8	84607279	1	HOSE, L=3.2M
9	84607280	1	HOSE, L=3.2M
10	87354381	1	VALVE,
11	84807149	1	CLIP,
12	368582	3	STRAP,
13	120100	1	BOLT, Hex, M6 x 20, 8.8,
14	9513271	1	CLAMP,
15	322357	1	WASHER, SPRING, Belleville, M6,
16	9706755	1	NUT, M6, Cl 8,

18.84085919(01) INSTRUCTIONAL SEAT

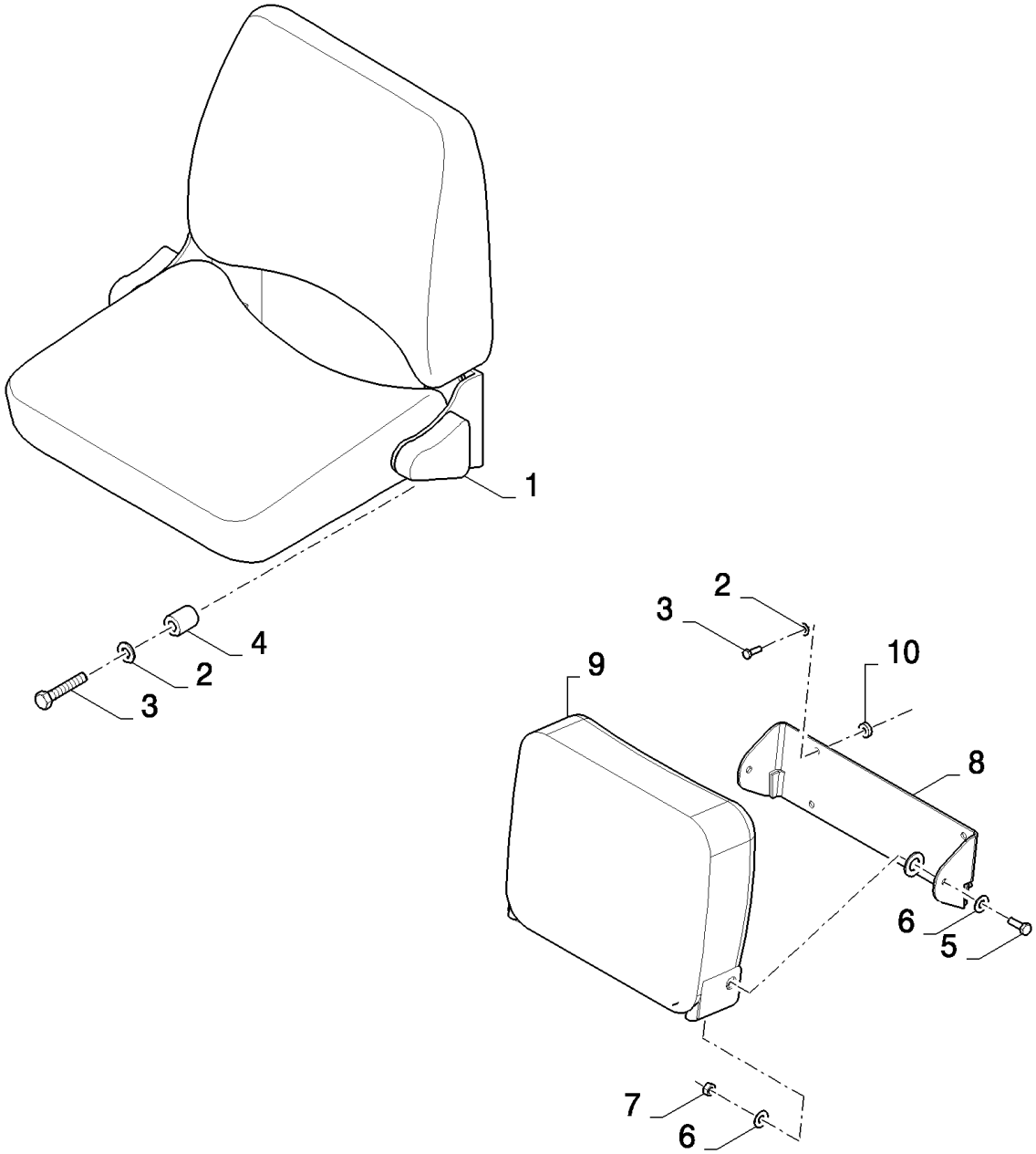

CS660 COMBINE BASE UNIT (1/03-) - Accessories

18.84085919(01) INSTRUCTIONAL SEAT

ссылка	Номер детали	Кол-во	Описание
	84085919		DIA KIT, HARVESTER,
1	84015303	1	SEAT, PASSENGER, , BSN C479
2	322358	4	WASHER, SPRING, Belleville, M8,
3	43130	4	BOLT, Hex, M8 x 50, 8.8, , BSN C487
3	43127	4	BOLT, Hex, M8 x 25, 8.8, , ASN D488
4	84448099	4	BUSHING, , BSN C479
5	43139	1	SCREW, , BSN F480487
5	43138	1	BOLT, Hex, M10 x 20, 8.8, Full Thd, , ASN D488
6	140045	2	WASHER, SPRING, Belleville, M10, , BSN F480487
6	378247	1	WASHER, , ASN D488
7	100016	1	NUT, M10, Cl 8, , ASN D480
8	84801303	1	SUPPORT, , BSN F480487
8	87360754	1	SUPPORT, , ASN D488
9	84801290	1	SEAT, PASSENGER, , BSN F480487
9	87374531	1	SEAT, PASSENGER, , ASN D488
10	84037173	4	ROLLER, , ASN D488

18.84085921(01) SECOND GRAIN TANK LEVEL SENSOR

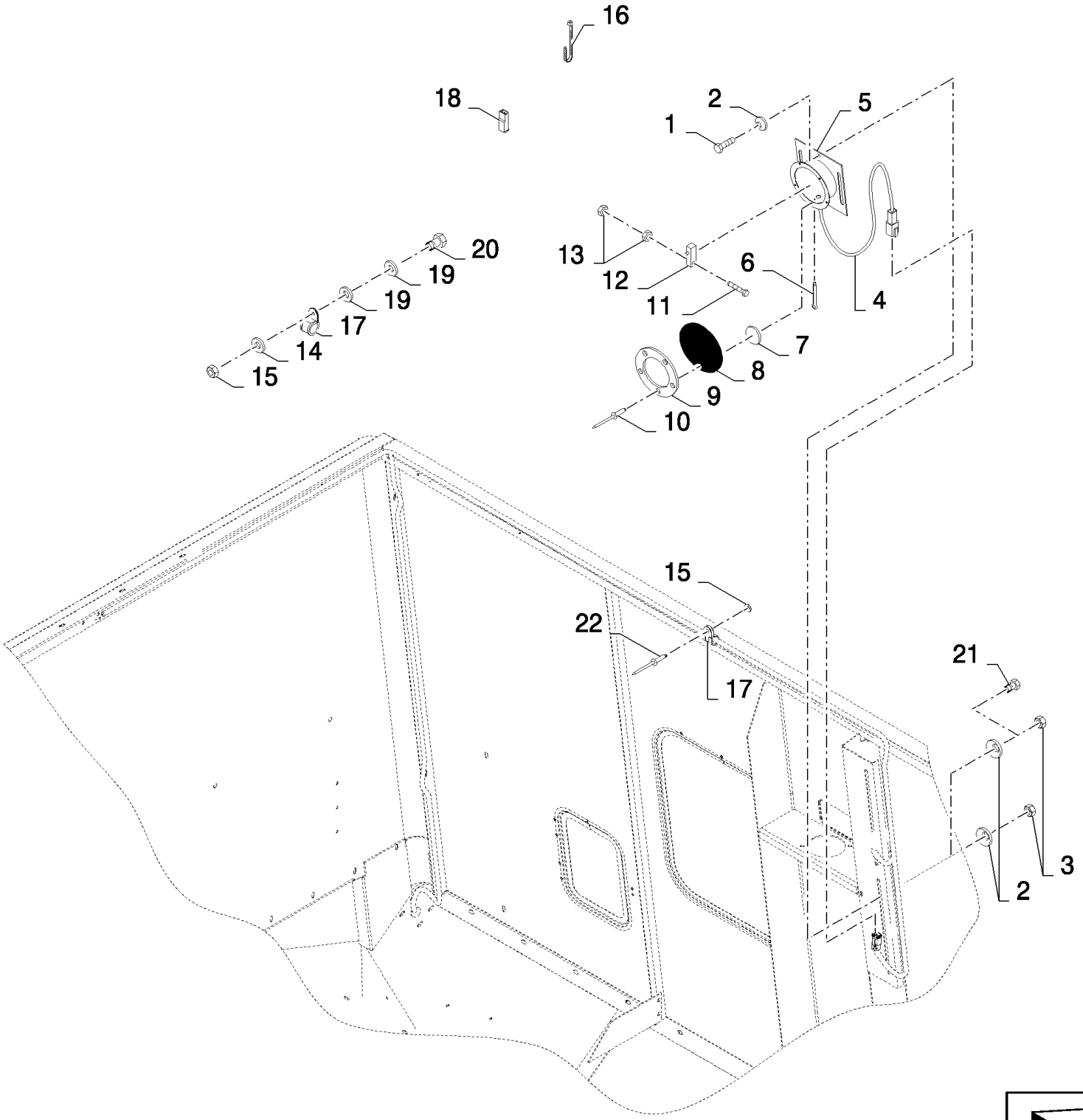

CS660 COMBINE BASE UNIT (1/03-) - Accessories

18.84085921(01) SECOND GRAIN TANK LEVEL SENSOR

ссылка	Номер детали	Кол-во	Описание
	84085921		DIA KIT, HARVESTER,
1	120104	2	BOLT, Hex, M8 x 20, 8.8,
2	322358	4	WASHER, SPRING, Belleville, M8,
3	89706690	2	NUT, M8, Cl 8,
4	84449919	1	HARNESS, WIRE,
5	450336	1	CASE, {PP:80450336}
6	9512667	1	PIN, SPLIT (COTTER), {PP:89512667} M2 x 20,
7	250244	1	WASHER, {PP:80250244}
8	435233	1	CANVAS, {PP:80435233}
9	457556	1	RING, {PP:80457556}
10	425520	5	RIVET, {PP:80425520} RIVET
11	301571	2	SCREW, {PP:80301571} M3x25
12	399159	1	SWITCH, {PP:80399159}
13	86508812	4	NUT, M3, Cl 8,
14	322356	1	WASHER, LOCK, {PP:80322356} 5MM
15	15896221	1	NUT, M6, Cl 10,
16	89993154	2	CLAMP,
17	9507809	1	CLAMP, {PP:89507809}
18	441159	2	CONNECTOR, WIRE, {PP:80441159}
19	140040	2	WASHER, M6 x 22 x 2,
20	120100	1	BOLT, Hex, M6 x 20, 8.8,
21	16043224	2	BOLT, Hex, M8 x 16, 8.8, Full Thd,
22	9512290	1	RIVET, {PP:89512290}
	80400975		GLUE

18.84085924(01) QUICK RELEASE COUPLER

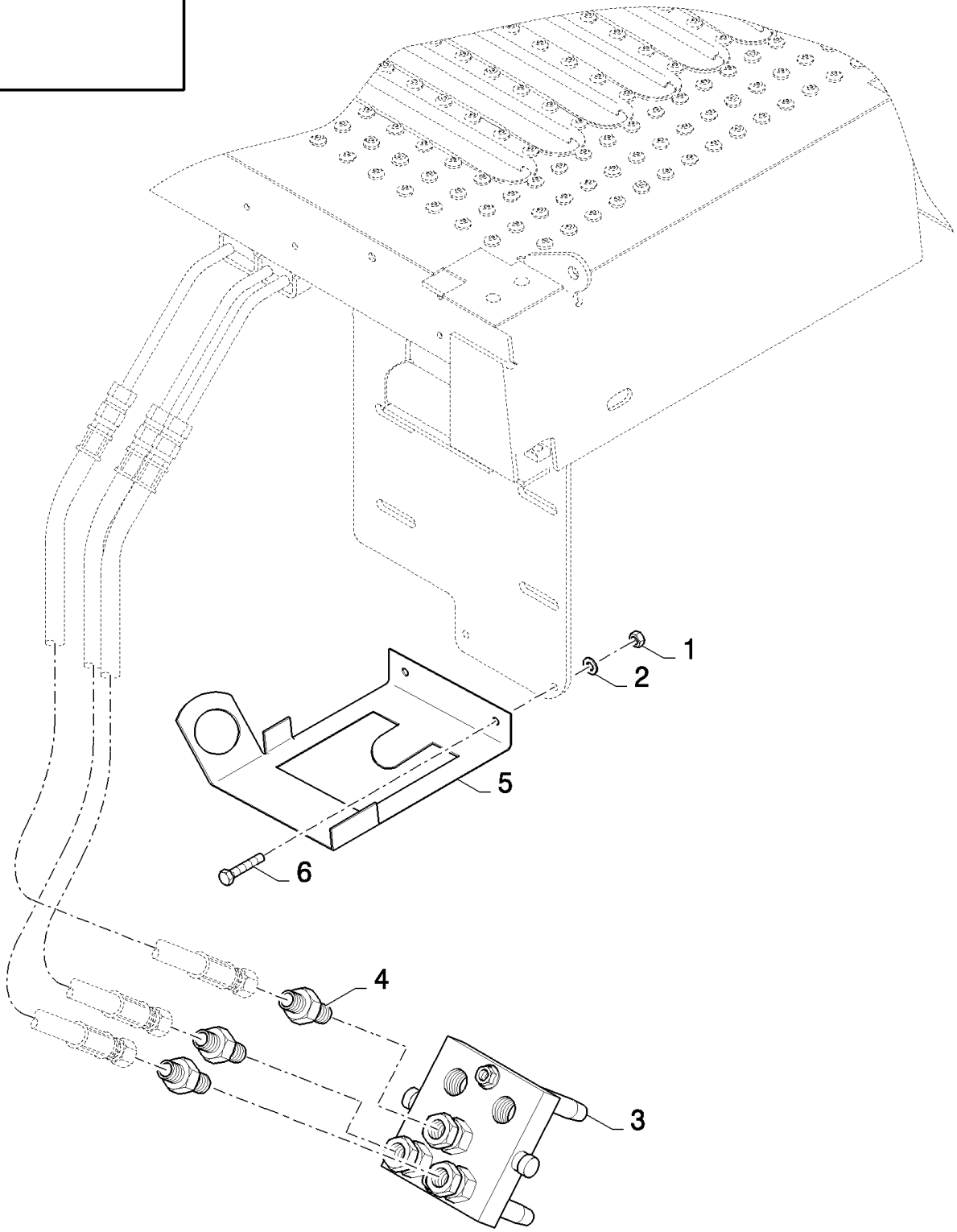

18.84085924(01) QUICK RELEASE COUPLER

ссылка	Номер детали	Кол-во	Описание
	84085924		DIA KIT, HARVESTER,
1	89706690	2	NUT, M8, Cl 8,
2	322358	2	WASHER, SPRING, Belleville, M8,
3	84435011	1	COUPLING, QUICK, MALE,
4	84077400	3	CONNECTOR, HYD.,
5	84459469	1	BRACKET,
6	43127	2	BOLT, Hex, M8 x 25, 8.8,
	86556176	0.01	OIL

CS660 COMBINE BASE UNIT (1/03-) - Accessories

18.84085937(01) CORN THRESHING REBUILD KIT - FROM RICE VERSION

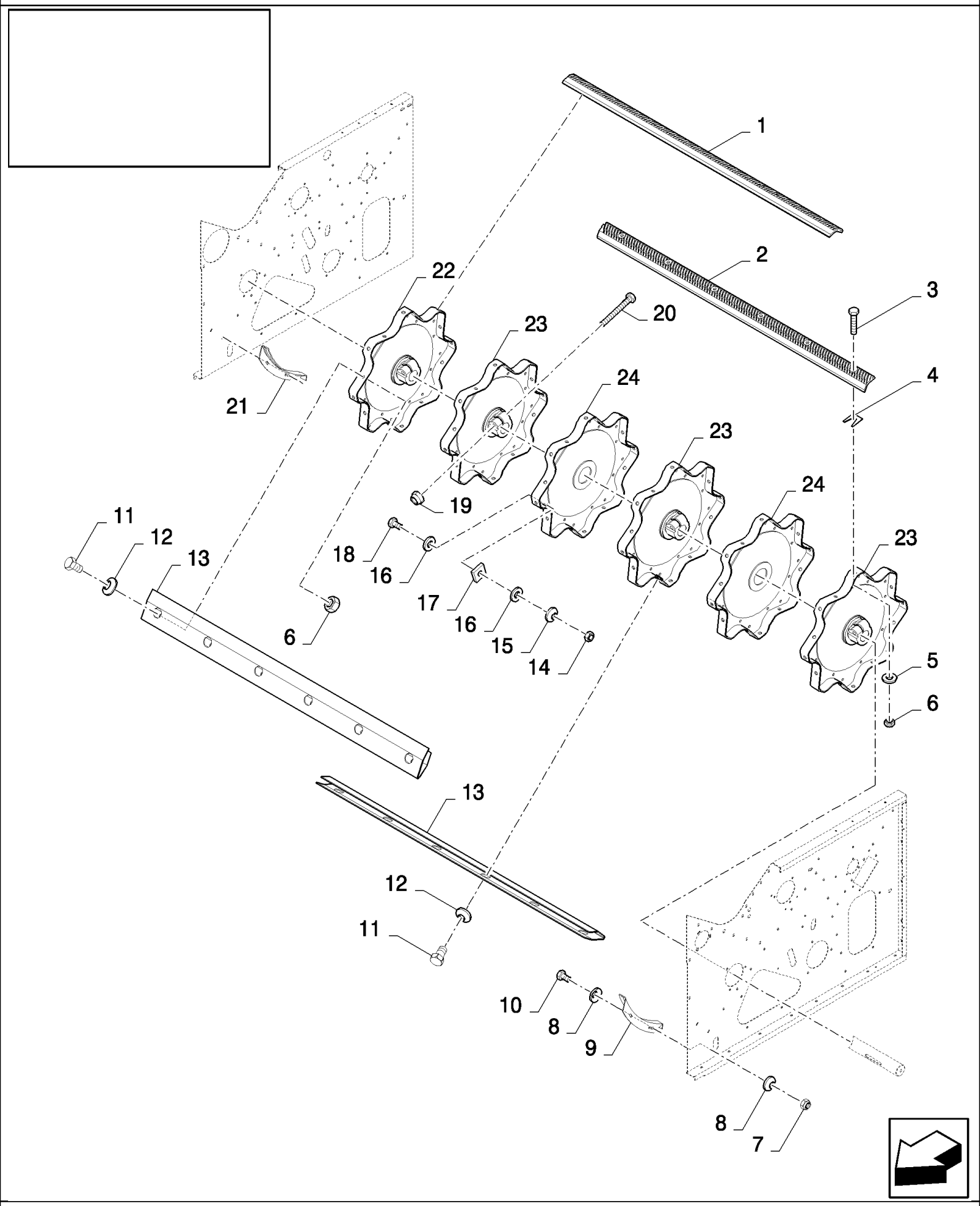

CS660 COMBINE BASE UNIT (1/03-) - Accessories

18.84085937(01) CORN THRESHING REBUILD KIT - FROM RICE VERSION

ссылка	Номер детали	Кол-во	Описание
	84085937		DIA KIT, HARVESTER,
1	84438637	2	RASP BAR SET, LH
2	84438638	2	RASP BAR SET, RH
3	385376	48	SCREW, {PP:80385376} M12x30
4	80481491	24	PLATE, ADJUSTING,
5	394630	48	WASHER, {PP:80394630}
6	9706685	74	NUT, M12, Cl 8,
7	353308	4	NUT, LOCK, M6 x 1, Cl 8,
8	322357	8	WASHER, SPRING, Belleville, M6,
9	333222	1	ANGLE BAR, {PP:80333222}
10	120100	4	BOLT, Hex, M6 x 20, 8.8,
11	300388	48	BOLT, Hex, M12 x 25, 8.8,
12	140046	48	WASHER, SPRING, Belleville, M12,
13	84440498	8	COVER,
14	89706690	6	NUT, M8, Cl 8,
15	322358	6	WASHER, SPRING, Belleville, M8,
16	140041	12	WASHER, M8 x 28 x 3,
17	351518	6	PLATE, ADJUSTING, {PP:80351518}
18	43128	6	BOLT, Hex, M8 x 30, 8.8,
19	86000441	4	NUT, LOCK, M16 x 2, Cl 8,
20	350616	4	BOLT, Hex, M16 x 90, 8.8,
21	335307	1	ANGLE BAR, {PP:80335307}
22	84440736	1	DISC,
23	84440731	3	DISC,
24	394487	2	DISC, {PP:80394487}
	86503661	0.04	GREASE

CS660 COMBINE BASE UNIT (1/03-) - Accessories

18.84085937(02) CORN THRESHING REBUILD KIT - FROM RICE VERSION

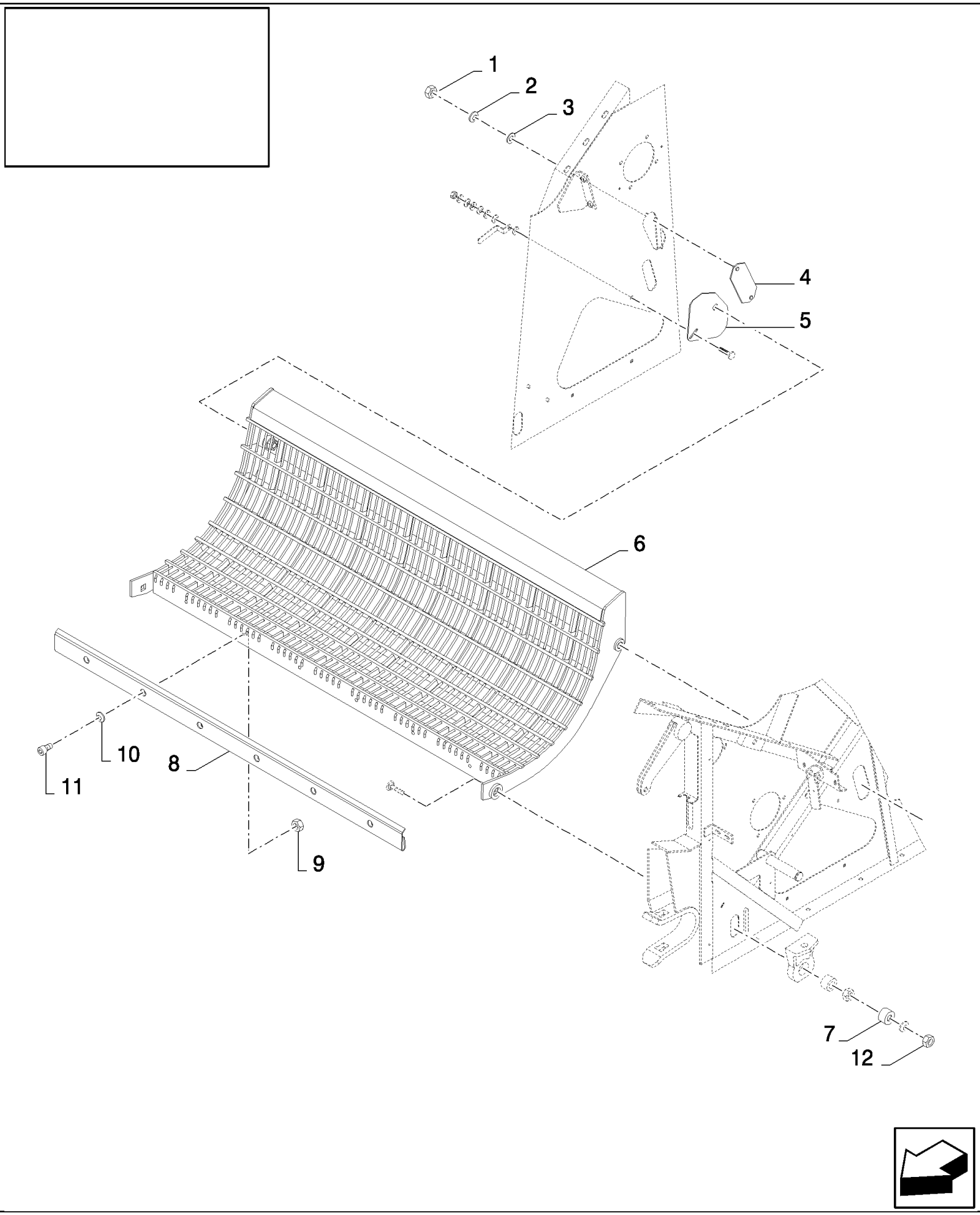

CS660 COMBINE BASE UNIT (1/03-) - Accessories

18.84085937(02) CORN THRESHING REBUILD KIT - FROM RICE VERSION

ссылка	Номер детали	Кол-во	Описание
1	15896221	2	NUT, M6, Cl 10,
2	322357	2	WASHER, SPRING, Belleville, M6,
3	140040	2	WASHER, M6 x 22 x 2,
4	84443834	1	PLATE, COVER,
5	84443839	1	PLATE, COVER,
6	84076873	1	CONCAVE,
7	84007394	2	BUSHING,
8	84072086	1	SHEET, FRONT,
9	100016	6	NUT, M10, Cl 8,
10	140045	6	WASHER, SPRING, Belleville, M10,
11	120052	6	SCREW, Hex Soc Hd, M10 x 25, 8.8,
12	380424	2	NUT, LOCK, M20 x 2.5, Cl 8,

18.84085941(01) GRAIN THRESHING REBUILD KIT - FROM RICE VERSION - WITH ROTARY SEPARATOR

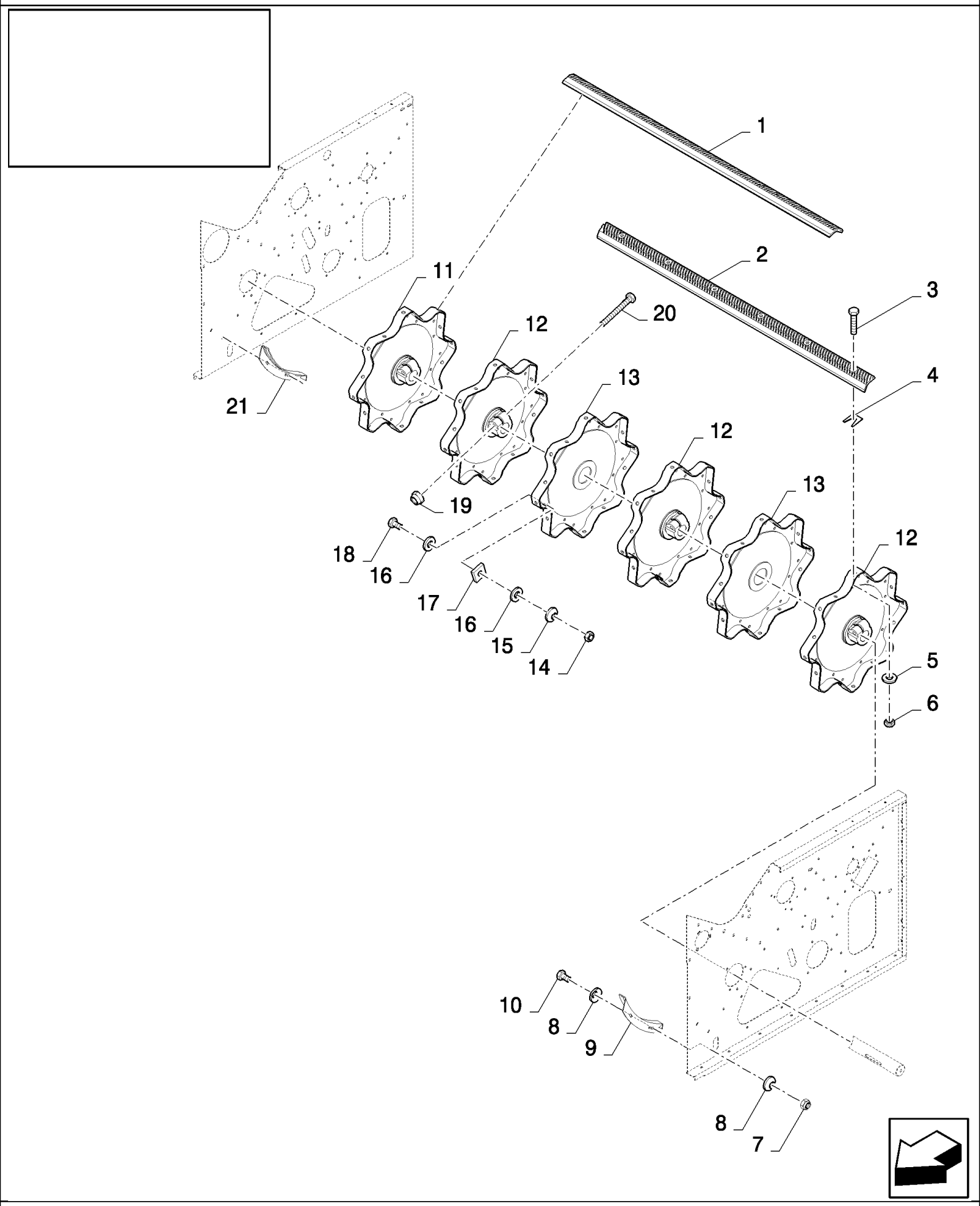

CS660 COMBINE BASE UNIT (1/03-) - Accessories

18.84085941(01) GRAIN THRESHING REBUILD KIT - FROM RICE VERSION - WITH ROTARY SEPARATOR

ссылка	Номер детали	Кол-во	Описание
	84085941		DIA KIT, HARVESTER,
1	84438637	2	RASP BAR SET, LH
2	84438638	2	RASP BAR SET, RH
3	385376	48	SCREW, {PP:80385376} M12x30
4	80481491	24	PLATE, ADJUSTING,
5	394630	48	WASHER, {PP:80394630}
6	9706685	74	NUT, M12, Cl 8,
7	353308	4	NUT, LOCK, M6 x 1, Cl 8,
8	322357	8	WASHER, SPRING, Belleville, M6,
9	333222	1	ANGLE BAR, {PP:80333222}
10	120100	4	BOLT, Hex, M6 x 20, 8.8,
11	84440736	1	DISC,
12	84440731	3	DISC,
13	394487	2	DISC, {PP:80394487}
14	89706690	6	NUT, M8, Cl 8,
15	322358	6	WASHER, SPRING, Belleville, M8,
16	140041	12	WASHER, M8 x 28 x 3,
17	351518	6	PLATE, ADJUSTING, {PP:80351518}
18	43128	6	BOLT, Hex, M8 x 30, 8.8,
19	86000441	4	NUT, LOCK, M16 x 2, Cl 8,
20	350616	4	BOLT, Hex, M16 x 90, 8.8,
21	335307	1	ANGLE BAR, {PP:80335307}
	86503661	0.04	GREASE

18.84085941(02) GRAIN THRESHING REBUILD KIT - FROM RICE VERSION - WITH ROTARY SEPARATOR

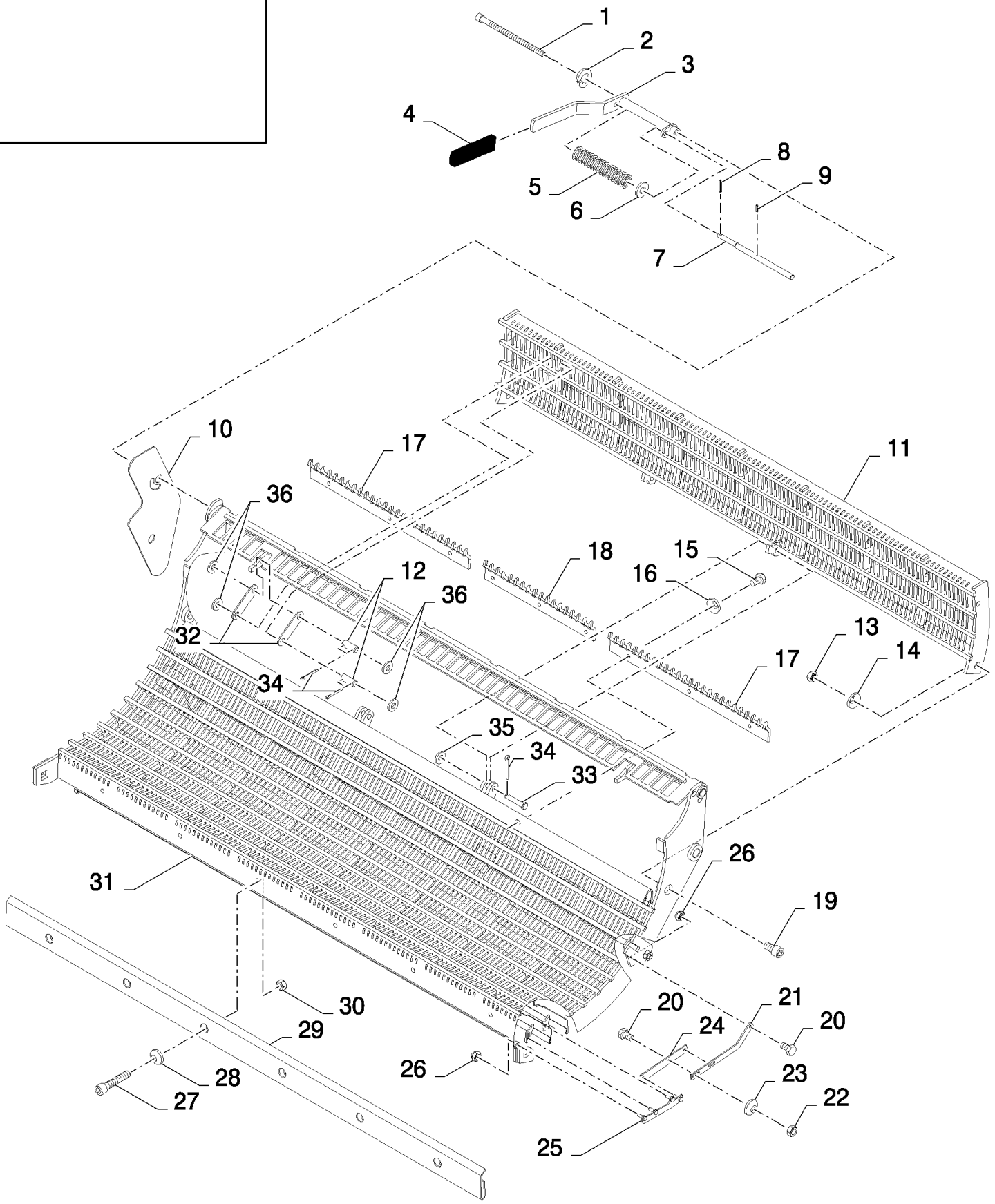

CS660 COMBINE BASE UNIT (1/03-) - Accessories

18.84085941(02) GRAIN THRESHING REBUILD KIT - FROM RICE VERSION - WITH ROTARY SEPARATOR

ссылка	Номер детали	Кол-во	Описание
1	84077695	1	SCREW, M12x200
2	412123	1	WASHER, LOCK, M12,
3	84072041	1	LEVER,
4	84439164	1	HANDLE GRIP,
5	321215	1	SPRING, {PP:80321215}
6	84439368	1	WASHER, 12.5MM
7	84072023	1	SHAFT,
8	9823343	1	PIN, LOCK, {PP:89823343} M5 x 65, Slotted,
9	300865	1	PIN, LOCK, {PP:80300865} M3 x 20, Slotted,
10	84431177	1	PLATE,
11	84071997	1	CONCAVE,
12	80324907	4	PIN, ROLL,
13	100020	2	NUT, M16, Cl 8,
14	140048	2	WASHER, SPRING, Belleville, M16,
15	120104	9	BOLT, Hex, M8 x 20, 8.8,
16	322358	9	WASHER, SPRING, Belleville, M8,
17	84432976	2	RAKE,
18	84431562	1	RAKE,
19	84077750	2	SCREW, M16x30
20	120100	6	BOLT, Hex, M6 x 20, 8.8,
21	84443709	2	LEVER,
22	15896221	4	NUT, M6, Cl 10,
23	322357	4	WASHER, SPRING, Belleville, M6,
24	84443708	2	LEVER,
25	84443710	2	LEVER,
26	353308	10	NUT, LOCK, M6 x 1, Cl 8,
27	120052	6	SCREW, Hex Soc Hd, M10 x 25, 8.8,
28	140045	6	WASHER, SPRING, Belleville, M10,
29	84072086	1	SHEET, FRONT,
30	100016	6	NUT, M10, Cl 8,
31	84072139	1	CONCAVE,
32	84441795	4	LEVER,
33	321018	2	PIN, CLEVIS, {PP:80321018} M12 x 40,
34	130003	10	PIN, SPLIT (COTTER), {PP:80130003} M3.2 x 20,
35	86511324	2	WASHER, M12 x 24 x 2.5,
36	378245	8	WASHER, M12,

18.84085941(03) GRAIN THRESHING REBUILD KIT - FROM RICE VERSION - WITH ROTARY SEPARATOR

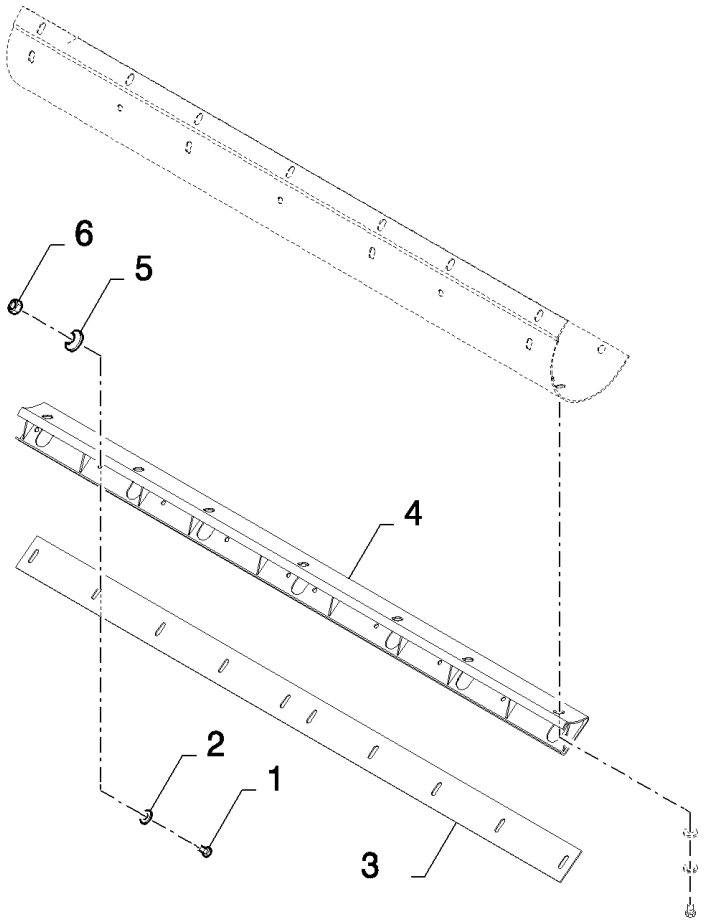

CS660 COMBINE BASE UNIT (1/03-) - Accessories

18.84085941(03) GRAIN THRESHING REBUILD KIT - FROM RICE VERSION - WITH ROTARY SEPARATOR

ссылка	Номер детали	Кол-во	Описание
1	120104	40	BOLT, Hex, M8 x 20, 8.8,
2	378243	40	WASHER, M8,
3	84989512	4	PLATE,
4	84989489	4	SUPPORT,
5	322358	40	WASHER, SPRING, Belleville, M8,
6	89706690	40	NUT, M8, Cl 8,

18.84085953(01) MIRRORS - REMOTE CONTROLLED

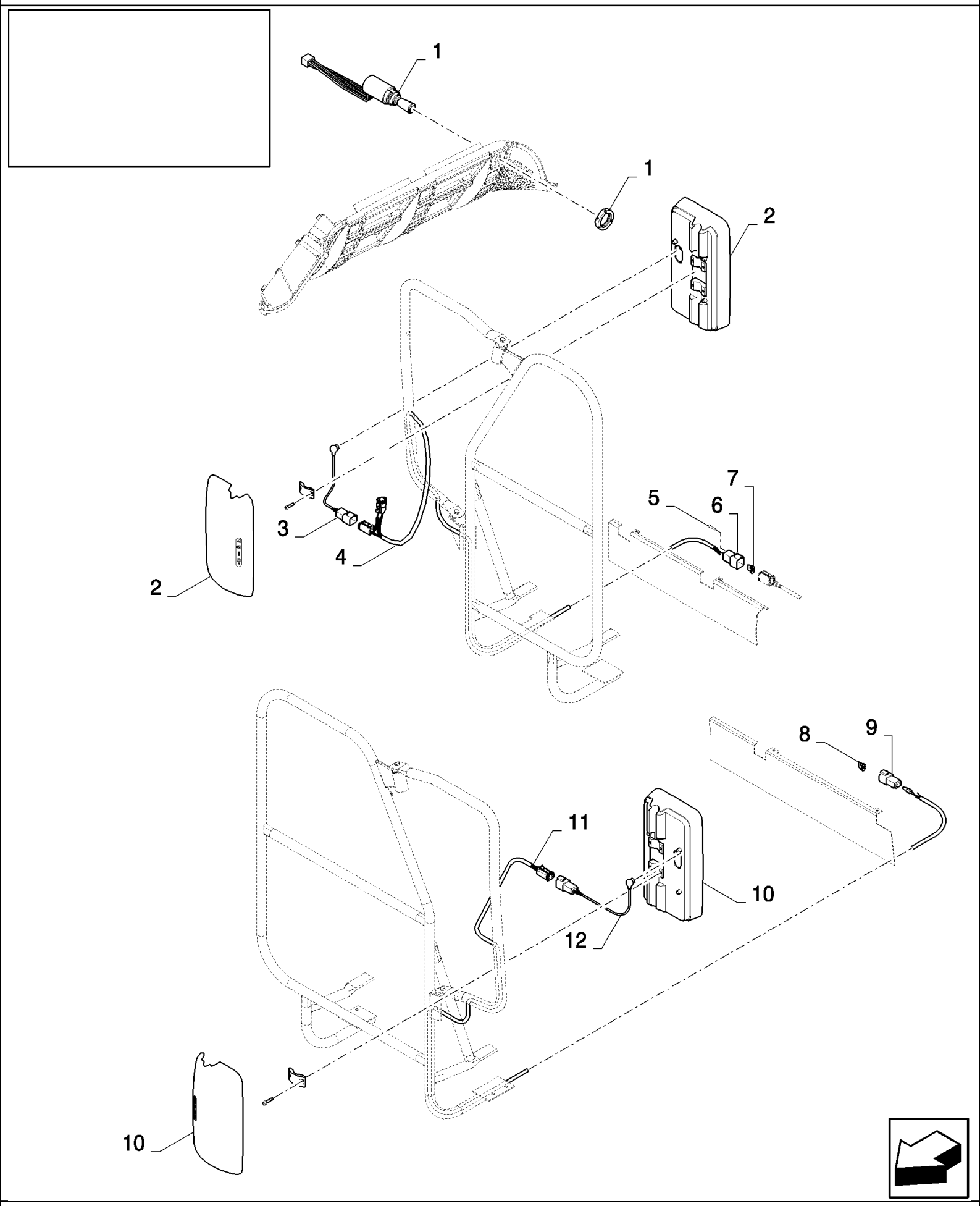

18.84085953(01) MIRRORS - REMOTE CONTROLLED

ссылка	Номер детали	Кол-во	Описание
	84085953		DIA KIT, HARVESTER,
1	84400393	1	SWITCH,
2	84059852	1	MIRROR, RH,
3	84441145	2	HARNESS, WIRE,
4	84441116	1	HARNESS, WIRE,
5	84068583	2	PLUG,
6	84074642	1	CONNECTOR, WIRE,
7	89861378	1	PLUG,
8	9861376	1	CONNECTOR, WIRE, {PP:89861376}
9	84074636	1	CONNECTOR, WIRE,
10	84059851	1	MIRROR, LH,
11	84441135	1	HARNESS, WIRE,

18.84085956(01) MIRRORS - ADDITIONAL

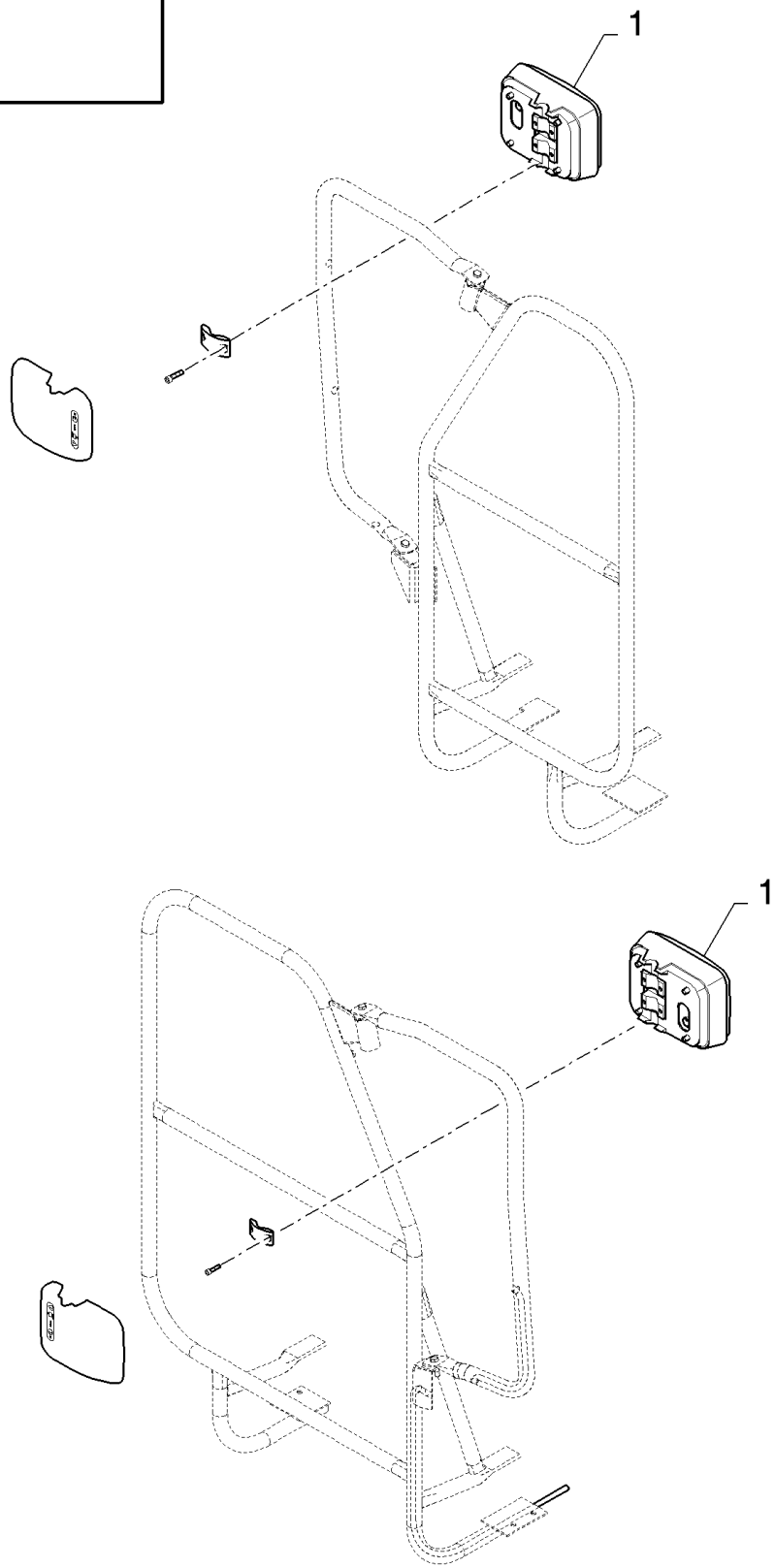

18.84085956(01) MIRRORS - ADDITIONAL

ссылка	Номер детали	Кол-во	Описание
	84085956		DIA KIT, HARVESTER,
1	84814470	2	DIA KIT, HARVESTER,

18.84085968(01) SEAT BELT - OPERATOR'S SEAT

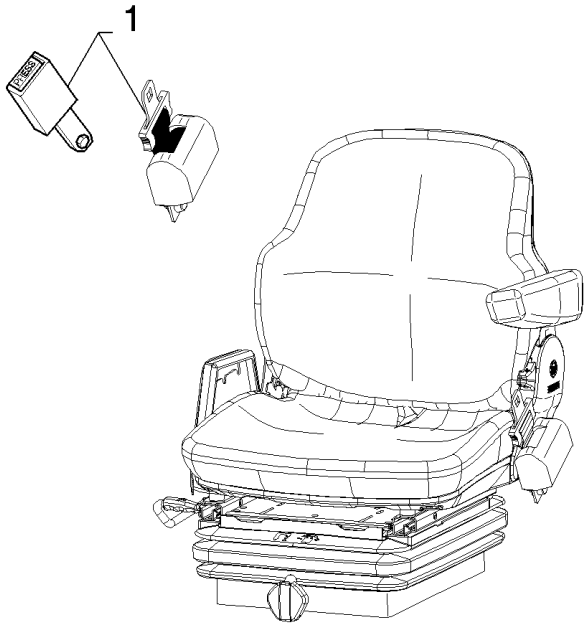

CS660 COMBINE BASE UNIT (1/03-) - Accessories

18.84085968(01) SEAT BELT - OPERATOR'S SEAT

ссылка	Номер детали	Кол-во	Описание
	84085968		DIA KIT, HARVESTER,
1	84429853	1	SEAT BELT,

18.84095829(01) DEAWNING SLATS - MODERATE CONCAVE

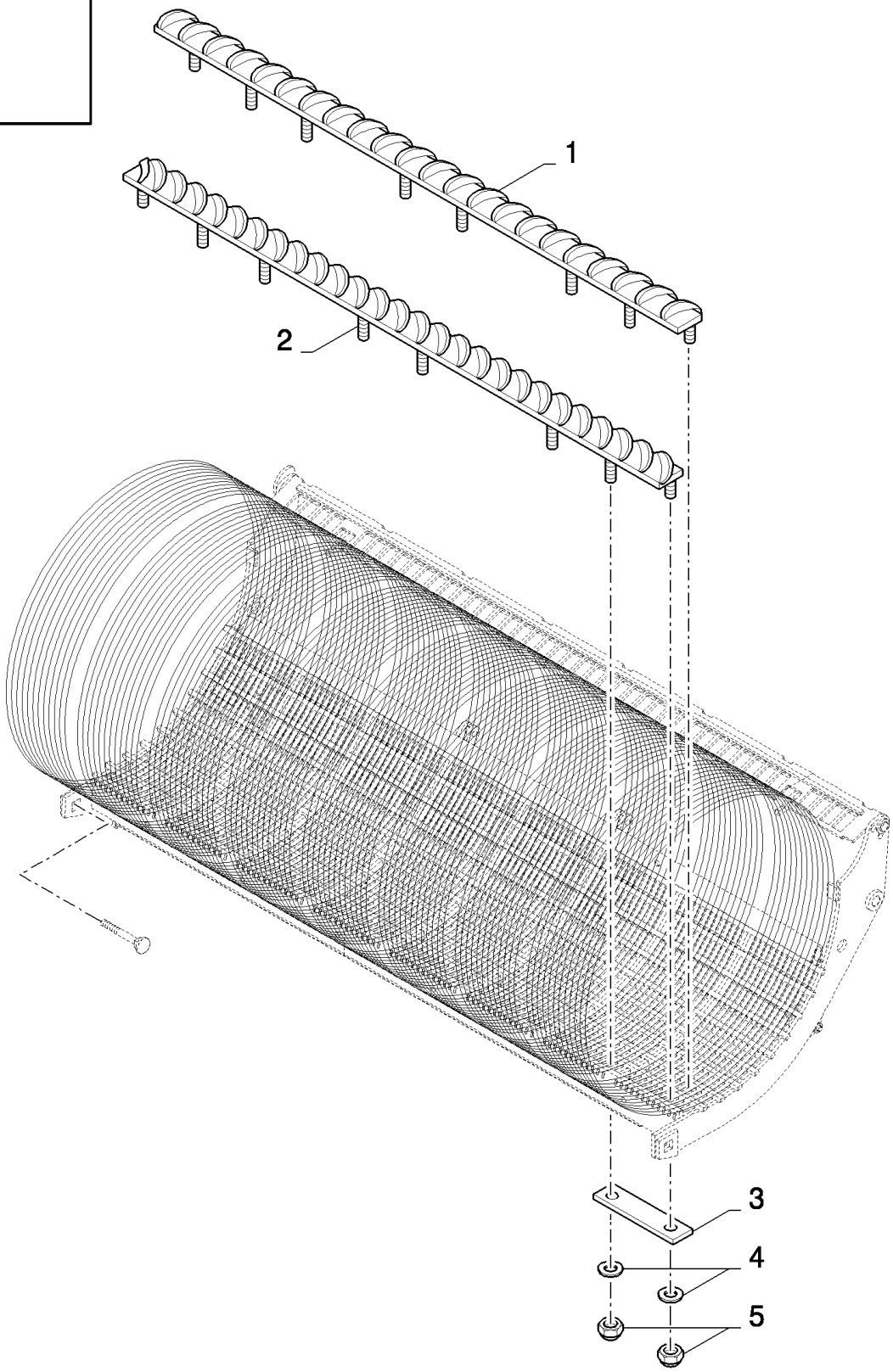

18.84095829(01) DEAWNING SLATS - MODERATE CONCAVE

ссылка	Номер детали	Кол-во	Описание
	84095829		DEAWNING SLATS,
1	84814227	1	DE AWNER,
2	84814223	1	DE AWNER,
3	9832998	6	PLATE, FIXING, {PP:89832998}
4	140041	16	WASHER, {PP:80140041} M8 x 28 x 3,
5	412250	16	NUT, LOCK, {PP:80412250} M8 x 1.25, Cl 8,

18.84101008(01) POWERED REAR AXLE REBUILD KIT FOR ADJUSTABLE AXLES

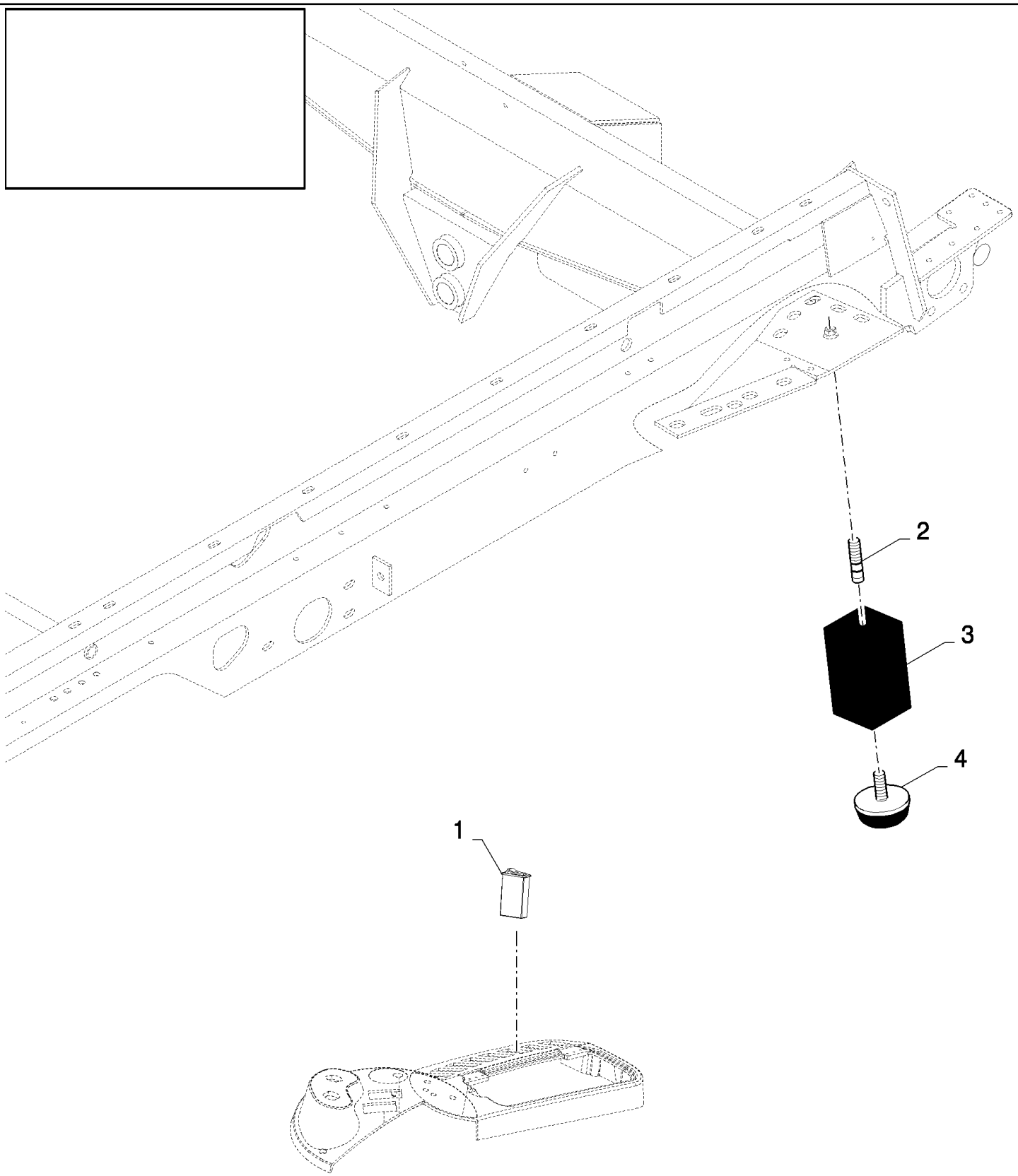

18.84101008(01) POWERED REAR AXLE REBUILD KIT FOR ADJUSTABLE AXLES

ссылка	Номер детали	Кол-во	Описание
	84101008		DIA KIT, HARVESTER,
1	84806859	1	SWITCH,
2	412593	2	BOLT, {PP:80412593}
3	417299	2	STOP, {PP:80417299}
4	190029	2	INSULATOR BLOCK, {PP:80190029}

18.84101008(02) POWERED REAR AXLE REBUILD KIT FOR ADJUSTABLE AXLES

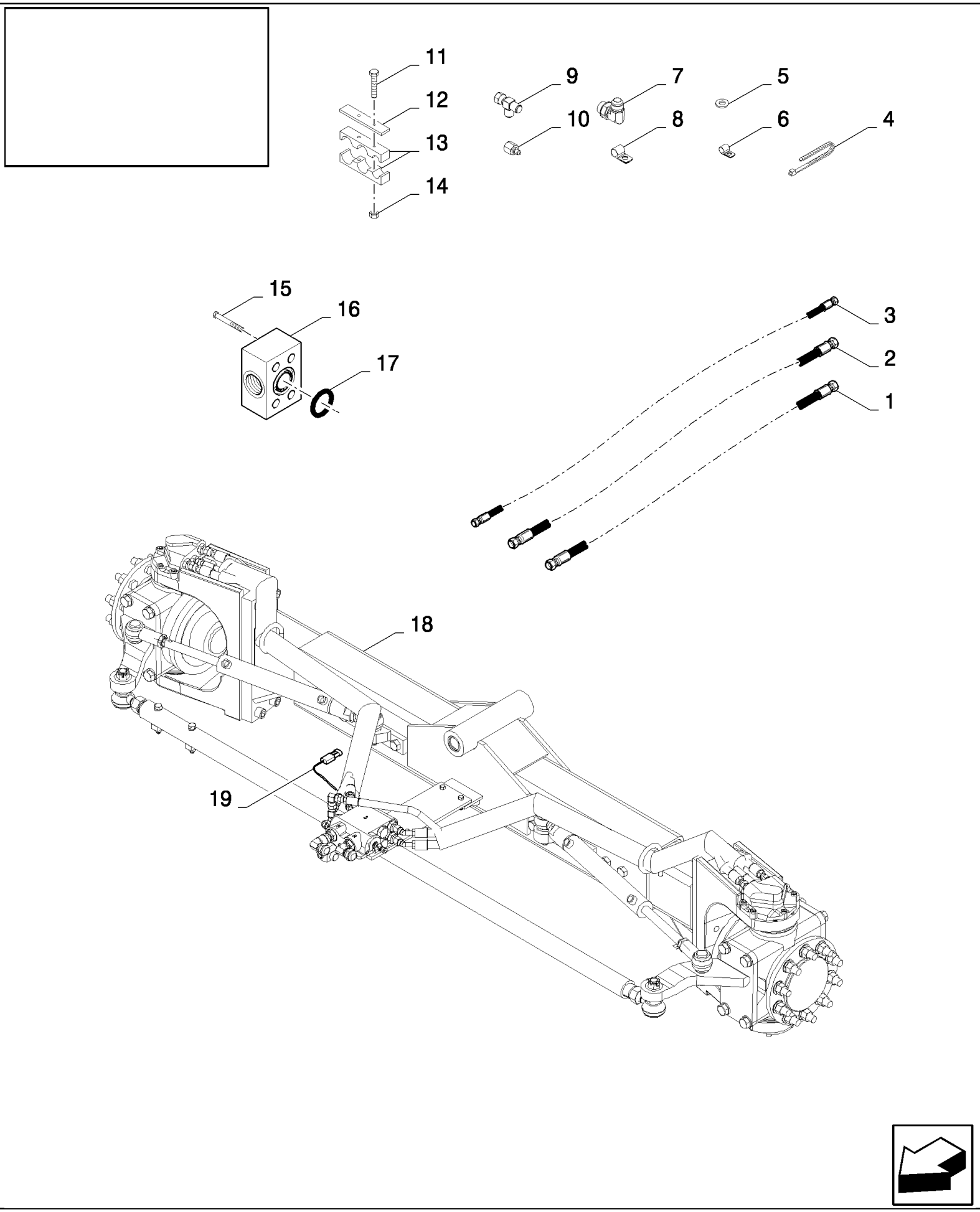

18.84101008(02) POWERED REAR AXLE REBUILD KIT FOR ADJUSTABLE AXLES

ссылка	Номер детали	Кол-во	Описание
1	84441308	1	HOSE, FLEXIBLE, L=123"
2	84807872	1	HOSE, FLEXIBLE, L=137"
3	84056198	1	HOSE, FLEXIBLE, L=150"
4	NS	28	NOT SERVICED,
5	87361	3	WASHER, {PP:80087361} 1/4", SAE,
6	84818444	2	CLAMP,
7	322894	2	ELBOW, {PP:80322894} 90є, 1 1/16"-12, 37є x 1 1/16"-12, O-Ring,
8	455556	1	CLAMP, {PP:80455556}
9	9507672	1	CONNECTION, 3 WAY, {PP:89507672}
10	9512230	1	REDUCER, {PP:89512230}
11	84807864	4	SCREW, M6x60
12	455534	2	SUPPORT, {PP:80455534}
13	455533	4	CLAMP, {PP:80455533}
14	412152	4	NUT, LOCK, {PP:80412152} M6 x 1, Cl 8.8,
15	9818286	4	BOLT, {PP:89818286} Hex, 1/2"-13 x 3 1/2", G8,
16	9818288	1	ADAPTER, {PP:89818288}
17	14464080	1	O-RING, -222, 70 Duro, 1.484" ID x .139" Thk,
18	84085992	1	
19	84446931	1	HARNESS, WIRE,

18.84101008(03) POWERED REAR AXLE REBUILD KIT FOR ADJUSTABLE AXLES

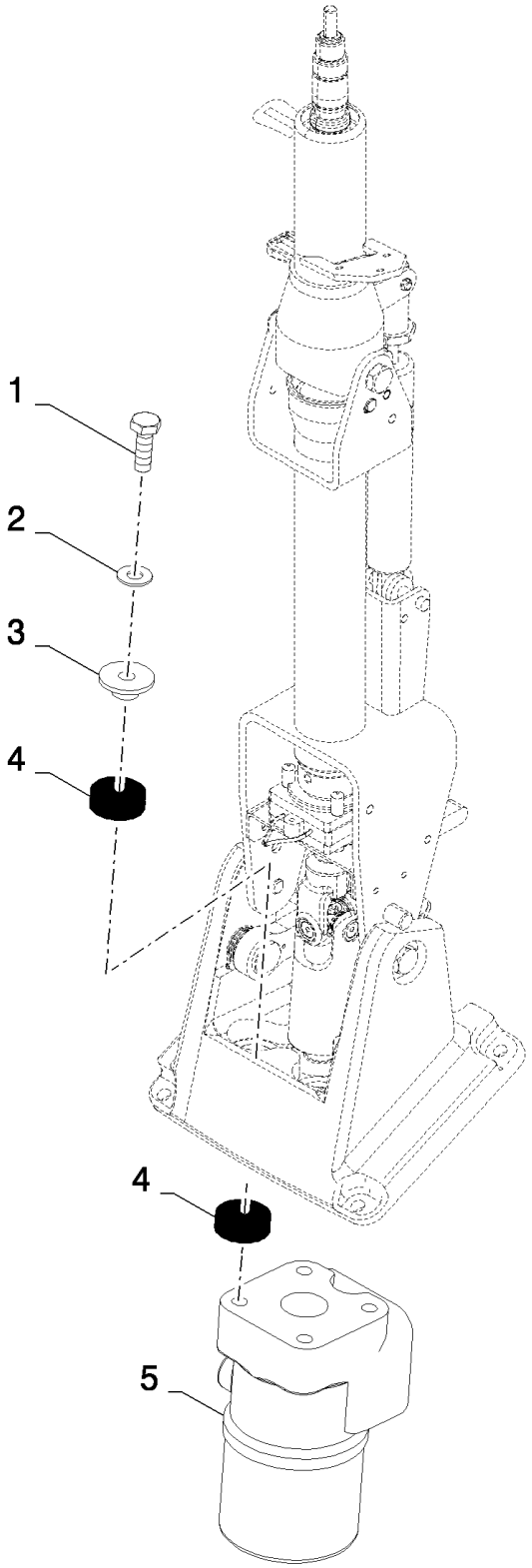

CS660 COMBINE BASE UNIT (1/03-) - Accessories

18.84101008(03) POWERED REAR AXLE REBUILD KIT FOR ADJUSTABLE AXLES

ссылка	Номер детали	Кол-во	Описание
1	9706704	4	BOLT, Hex, M10 x 35, 8.8, Full Thd,
2	140045	4	WASHER, SPRING, Belleville, M10,
3	84819581	4	FLANGE,
4	84819582	8	DAMPER,
5	84458935	1	VALVE, HYDRAULIC,

18.84101010(01) STRAWELEVATOR - 3RD ROLLER KIT

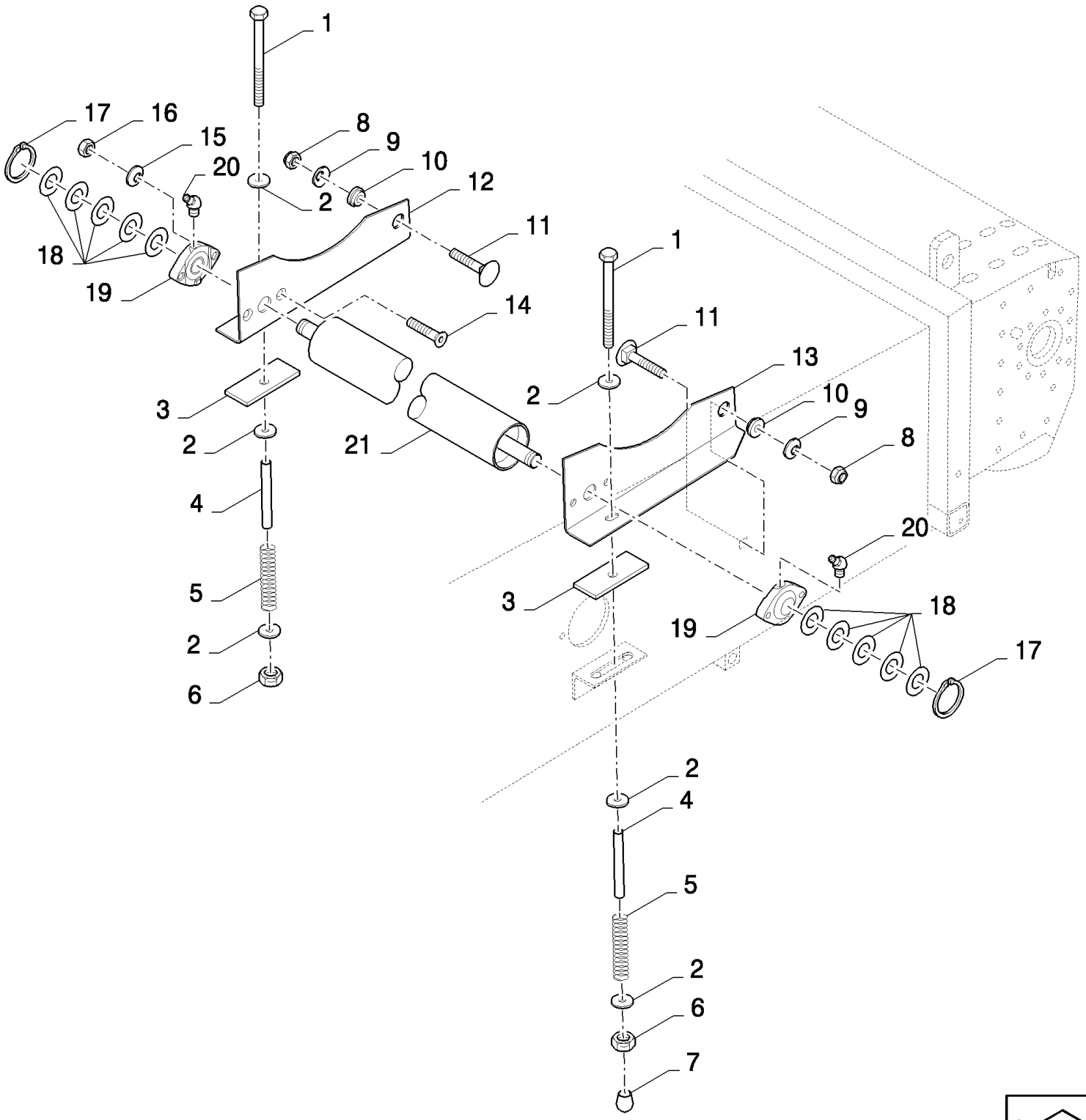

CS660 COMBINE BASE UNIT (1/03-) - Accessories

18.84101010(01) STRAWELEVATOR - 3RD ROLLER KIT

ссылка	Номер детали	Кол-во	Описание
	84101010		DIA KIT, HARVESTER,
1	412579	2	BOLT, {PP:80412579} Hex, M10 x 230, 8.8, M10x230
2	9832748	6	WASHER, {PP:89832748} 11MM
3	9500474	2	PAD, RUBBER, {PP:89500474}
4	84334391	2	TUBE,
5	354085	2	SPRING, {PP:80354085}
6	412141	2	NUT, LOCK, M10 x 1.5, Cl 8,
7	84005018	1	PLUG,
8	100038	2	NUT, LOCK, M12 x 1.75, Cl 8,
9	140046	2	WASHER, SPRING, Belleville, M12,
10	9500475	2	BUSHING, {PP:89500475}
11	120044	2	BOLT, CARRIAGE, Short NK, M12 x 30, Cl8.8, Full Thd,
12	84039236	1	SUPPORT, RH
13	84039235	1	SUPPORT, LH
14	412466	4	SCREW, {PP:80412466} Hex Soc Flat Hd, M10 x 35, 8.8, M10x40
15	140045	4	WASHER, SPRING, Belleville, M10,
16	100016	4	NUT, M10, Cl 8,
17	370002	2	RING, SNAP, {PP:80370002} M25, Ext,
18	140229	10	WASHER, {PP:80140229} 26MM
19	9514667	2	BEARING ASSY, {PP:89514667}
20	84814929	2	NIPPLE, LUBE,
21	84071544	1	ROLLER, CONVEYOR,
	84334829	2	DECAL,
	86503661	0.01	GREASE
	80400972	0.01	GREASE
	89504635	0.01	LOCTITE

18.84101109(01) CHOPPER REBUILD KIT - REMOTE ADJUSTABLE DEFLECTORS

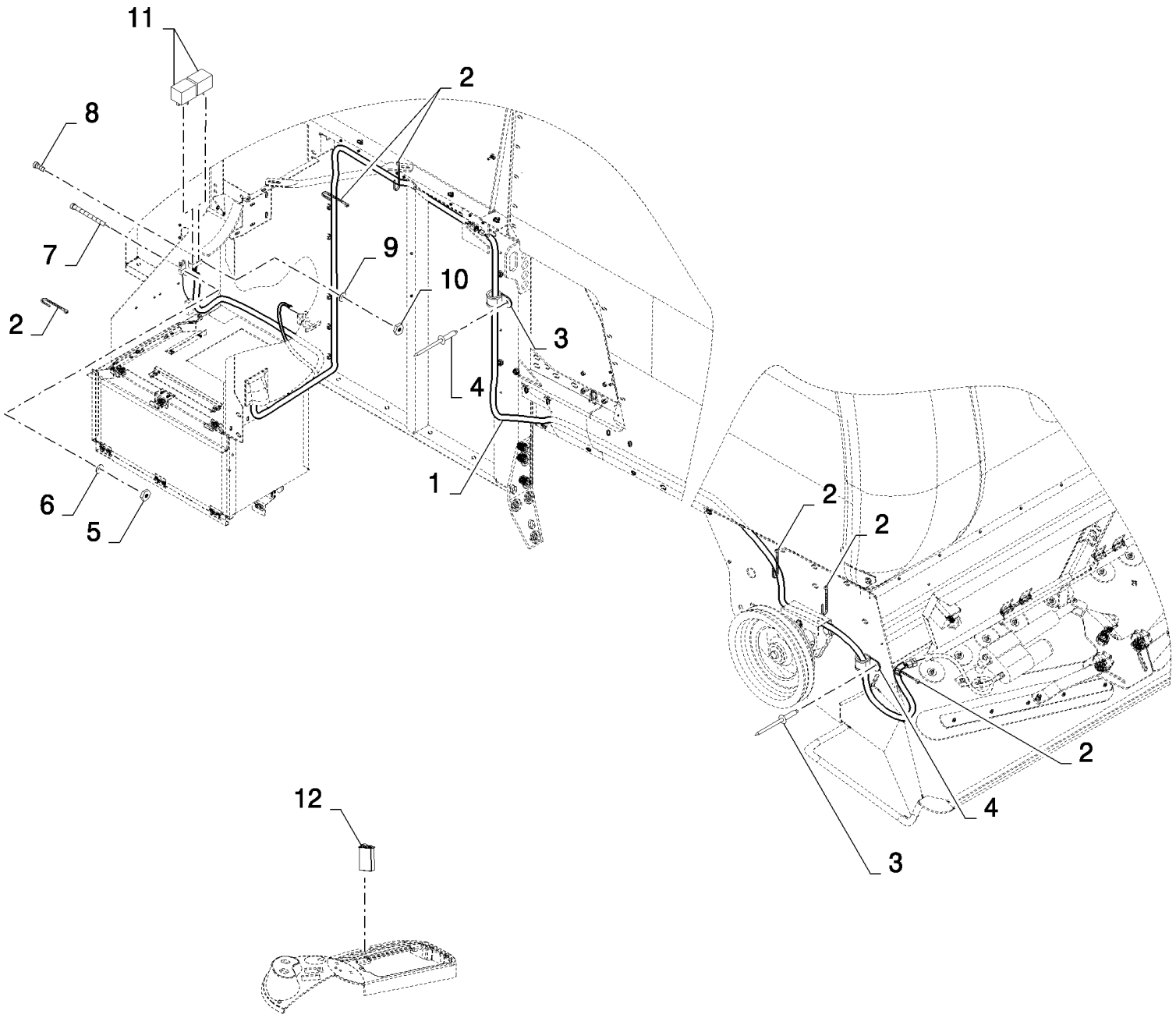

18.84101109(01) CHOPPER REBUILD KIT - REMOTE ADJUSTABLE DEFLECTORS

ссылка	Номер детали	Кол-во	Описание
	84101109		DIA KIT, HARVESTER,
1	84441436	1	HARNESS, WIRE,
2	89993154	14	CLAMP,
3	9512290	6	RIVET, {PP:89512290} RIVET
4	84818442	6	CLAMP,
5	86508812	2	NUT, M3, Cl 8,
6	412548	2	WASHER, {PP:80412548} 3MM
7	86511816	2	SCREW, Cross Pan Hd, M3 x 16,
8	44334	2	SCREW, Cross Pan Hd, M4 x 12,
9	322355	2	WASHER, SPRING, Belleville, M4,
10	100012	2	NUT, M4, Cl 8,
11	84000651	2	RELAY,
12	84320655	1	SWITCH,

18.84101109(02) CHOPPER REBUILD KIT - REMOTE ADJUSTABLE DEFLECTORS

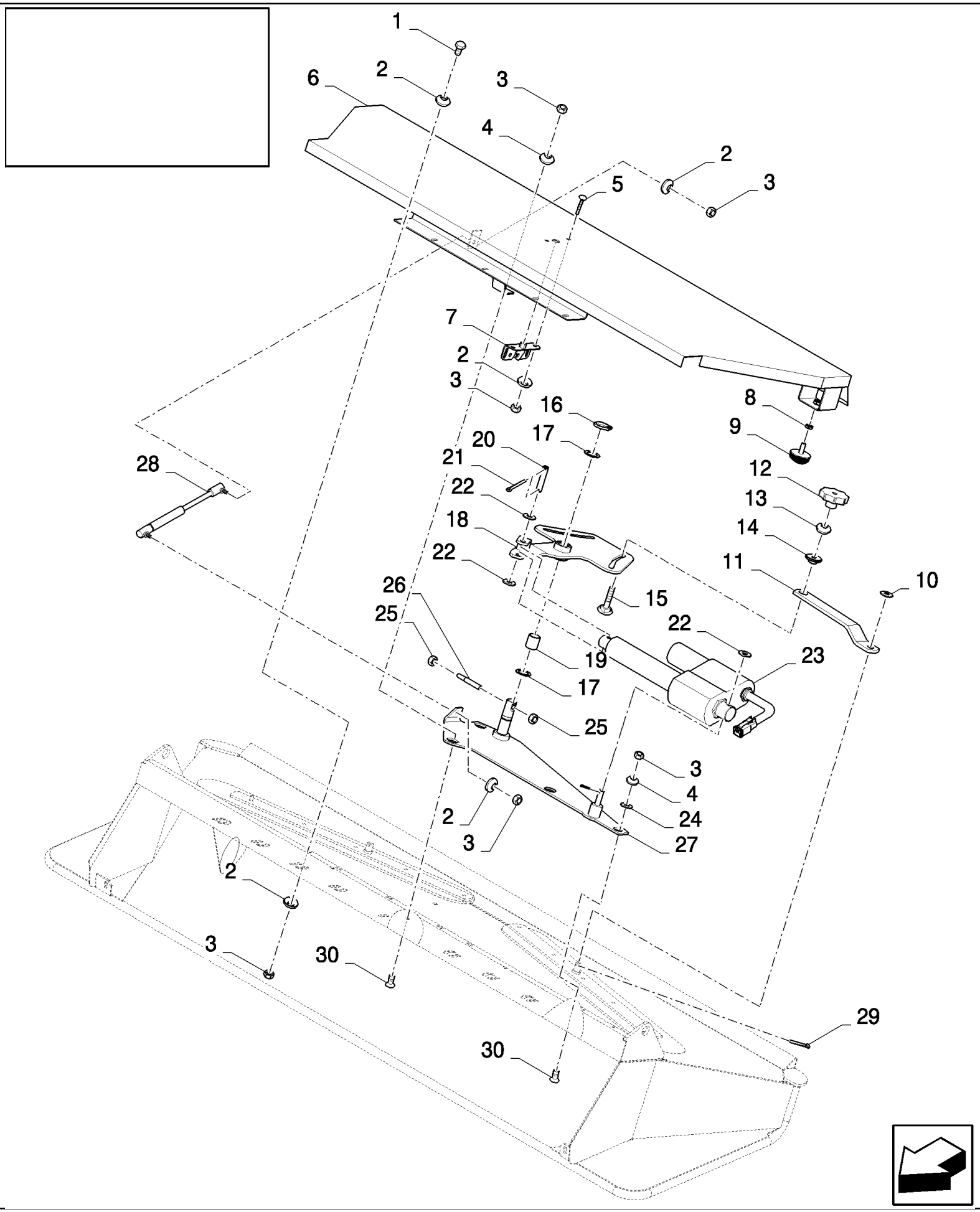

CS660 COMBINE BASE UNIT (1/03-) - Accessories

18.84101109(02) CHOPPER REBUILD KIT - REMOTE ADJUSTABLE DEFLECTORS

ссылка	Номер детали	Кол-во	Описание
1	120104	5	BOLT, Hex, M8 x 20, 8.8,
2	322358	14	WASHER, SPRING, Belleville, M8,
3	89706690	12	NUT, M8, Cl 8,
4	412650	3	WASHER, SPRING, Belleville, M8,
5	86507486	2	BOLT, CARRIAGE, Short NK, M8 x 20, Cl8.8, Full Thd,
6	84435678	1	COVER,
7	84015292	1	LOCK,
8	84807411	2	NUT, Thin, M10 x 1.5, Cl 04,
9	190029	2	INSULATOR BLOCK, {PP:80190029}
10	378246	2	WASHER, {PP:80378246} 16MM
11	84435480	2	LINKAGE,
12	84440562	2	KNOB,
13	140045	2	WASHER, SPRING, Belleville, M10,
14	84435513	2	BUSHING,
15	350459	2	BOLT, CARRIAGE, Short NK, M10 x 50, Cl8.8, Full Thd,
16	370002	1	RING, SNAP, {PP:80370002} M25, Ext,
17	140103	2	WASHER, {PP:80140103} 26MM
18	84435495	1	LEVER,
19	80395589	1	SLEEVE,
20	84017216	1	PIN,
21	130003	3	PIN, SPLIT (COTTER), {PP:80130003} M3.2 x 20,
22	378245	3	WASHER, M12,
23	84018921	1	ACTUATOR,
24	554195	2	WASHER, {PP:80554195} 9MM
25	100016	2	NUT, M10, Cl 8,
26	84018597	1	ROD, THREADED,
27	84435645	1	SUPPORT,
28	89994348	1	GAS STRUT,
29	130004	2	PIN, SPLIT (COTTER), {PP:80130004} M3.2 x 25,
30	412495	3	SCREW, {PP:80412495} Hex Soc Flat Hd, M8 x 20, 8.8, M8x20
	84004739	2	DECAL,
	86503661	0.01	

CS660 COMBINE BASE UNIT (1/03-) - Accessories

18.84101116(01) SIGNAL PLATES

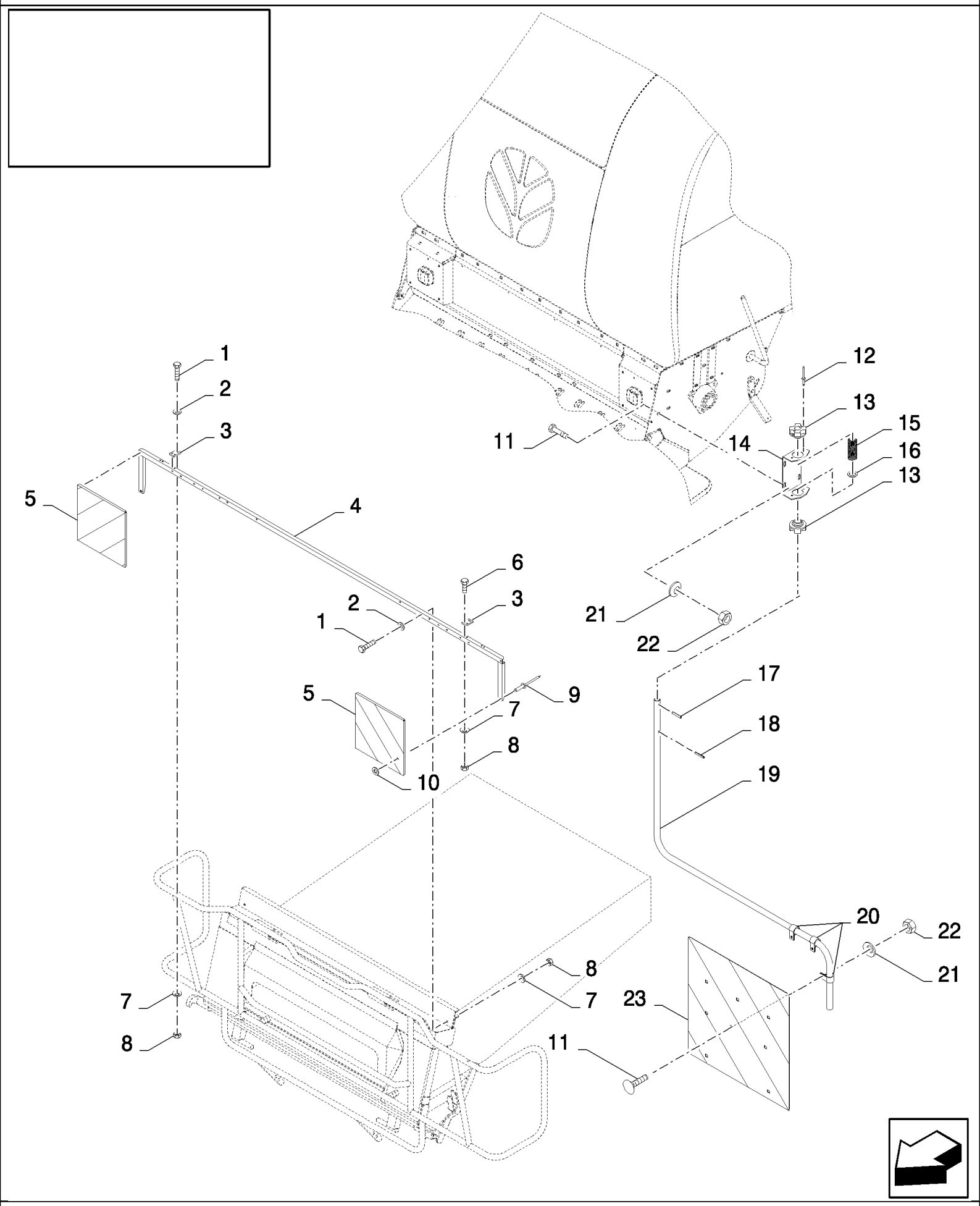

CS660 COMBINE BASE UNIT (1/03-) - Accessories

18.84101116(01) SIGNAL PLATES

ссылка	Номер детали	Кол-во	Описание
	84101116		DIA KIT, HARVESTER,
1	43118	2	BOLT, Hex, M6 x 40, 8.8,
2	86588450	2	WASHER, M6,
3	84818296	2	SUPPORT,
4	9502877	1	SUPPORT, {PP:89502877}
5	84607381	2	PLATE,
6	86508568	4	BOLT, Hex, M6 x 16, 8.8,
7	322357	6	WASHER, SPRING, Belleville, M6,
8	15896221	6	NUT, M6, Cl 10,
9	425523	6	RIVET, {PP:80425523} RIVET
10	89824840	6	WASHER, 4MM
11	120104	14	BOLT, Hex, M8 x 20, 8.8,
12	455959	8	RIVET,
13	921928	4	RING, {PP:80921928}
14	9814947	2	SUPPORT, {PP:89814947}
15	435967	2	SPRING, {PP:80435967}
16	378248	2	WASHER, {PP:80378248} 24MM
17	84022829	2	PIN,
18	9503523	2	PIN, {PP:89503523}
19	84447687	1	ARM, SUPPORTING, RH
19	84447654	1	ARM, SUPPORTING, LH
20	418407	6	CLAMP, {PP:80418407}
21	322358	14	WASHER, SPRING, Belleville, M8,
22	89706690	14	NUT, M8, Cl 8,

18.84101137(01) LIGHT KIT - FLIP-UP CORNHEADER

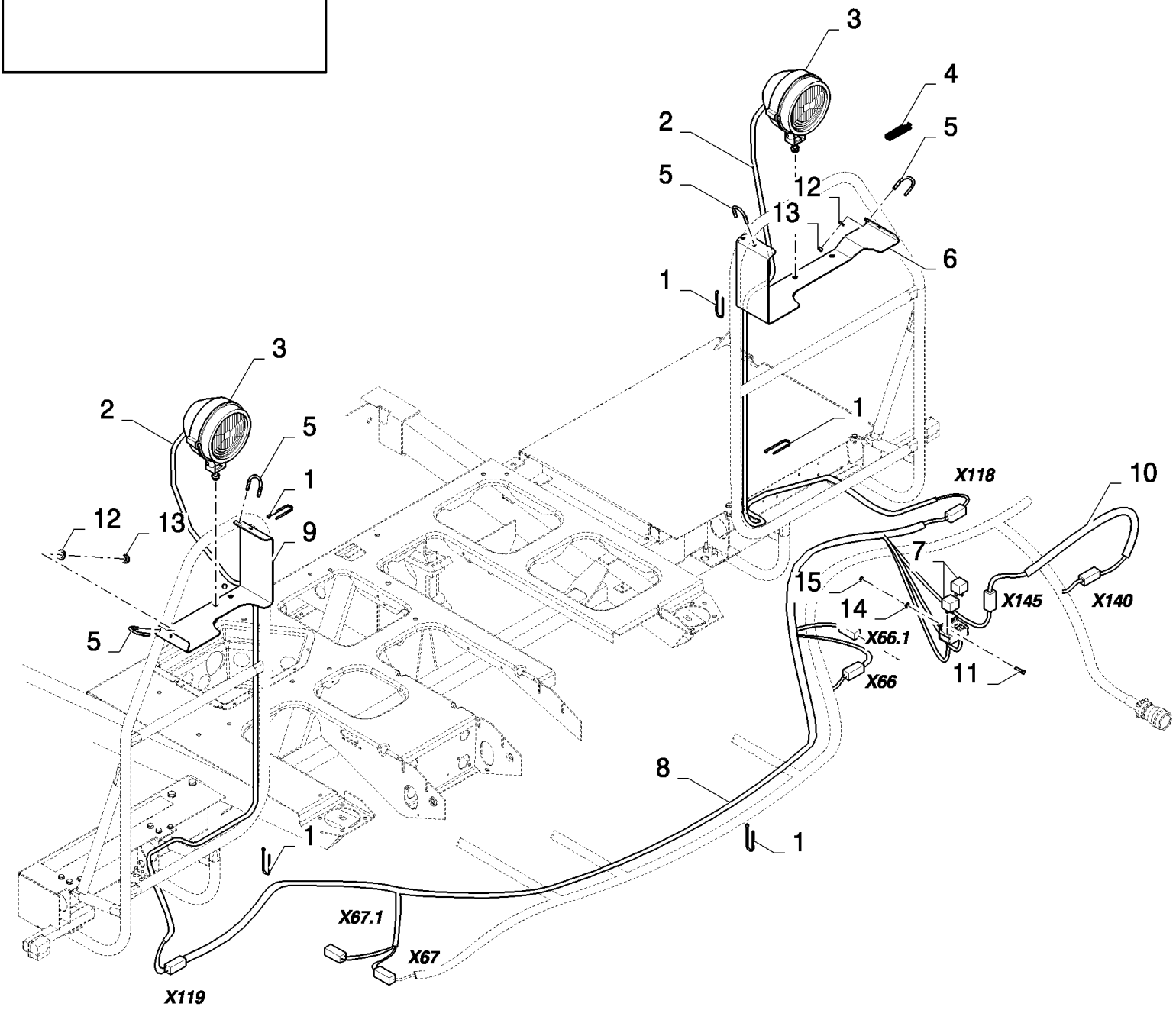

CS660 COMBINE BASE UNIT (1/03-) - Accessories

18.84101137(01) LIGHT KIT - FLIP-UP CORNHEADER

ссылка	Номер детали	Кол-во	Описание
	84101137	1	DIA KIT, HARVESTER,
1	9993154	17	ELASTIC STRAP,
2	84448631	2	HARNESS, WIRE,
3	418863	2	LAMP,
4	89850033	1	SEAL, L=0.07M
5	84448555	4	U-BOLT,
6	84448518	1	SUPPORT,
7	84000651	2	RELAY,
8	84448868	1	HARNESS, WIRE,
9	84448530	1	SUPPORT,
10	84448908	1	HARNESS, WIRE,
11	120098	2	BOLT, Hex, M5 x 20, 8.8, Full Thd,
12	322357	8	WASHER, SPRING, Belleville, M6,
13	15896221	8	NUT, M6, Cl 10,
14	322356	2	WASHER, LOCK, 5MM
15	86508813	2	NUT, M5, Cl 8,

18.84101137(02) LIGHT KIT - FLIP-UP CORNHEADER

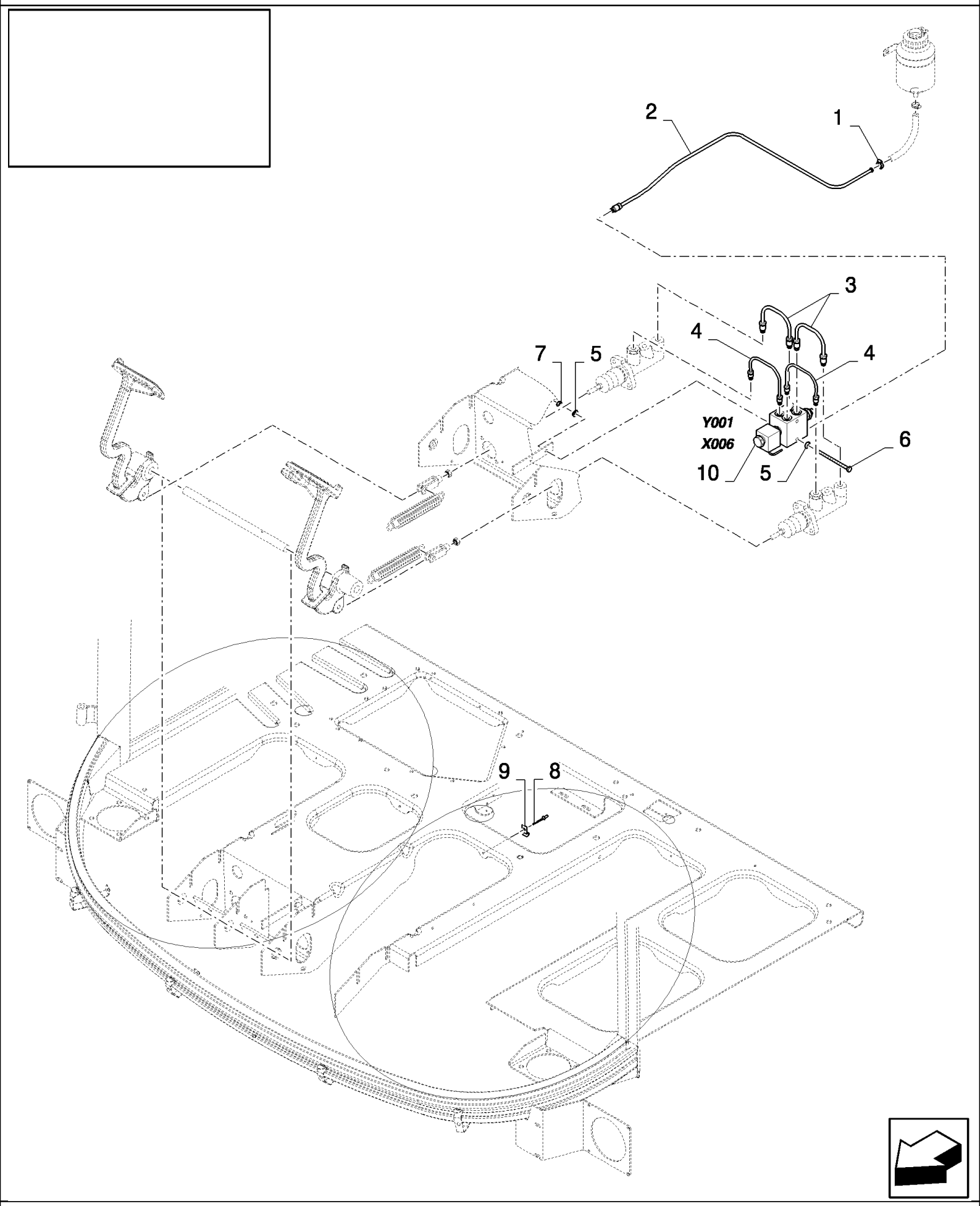

CS660 COMBINE BASE UNIT (1/03-) - Accessories

18.84101137(02) LIGHT KIT - FLIP-UP CORNHEADER

ссылка	Номер детали	Кол-во	Описание
1	913888	1	CLAMP, HOSE,
2	84448948	1	BRAKE LINE,
3	84817771	2	TUBE, HYD,
4	84817773	2	TUBE, HYD,
5	322357	2	WASHER, SPRING, Belleville, M6,
6	86508569	1	BOLT, Hex, M6 x 70, 8.8, M6x70
7	15896221	1	NUT, M6, Cl 10,
8	425520	1	RIVET, RIVET
9	412089	1	CLAMP,
10	84607499	1	VALVE, HYDRAULIC,
	94110	0.6	PACKAGE, Brake oil

18.84101145(01) PRE-HEATING KIT

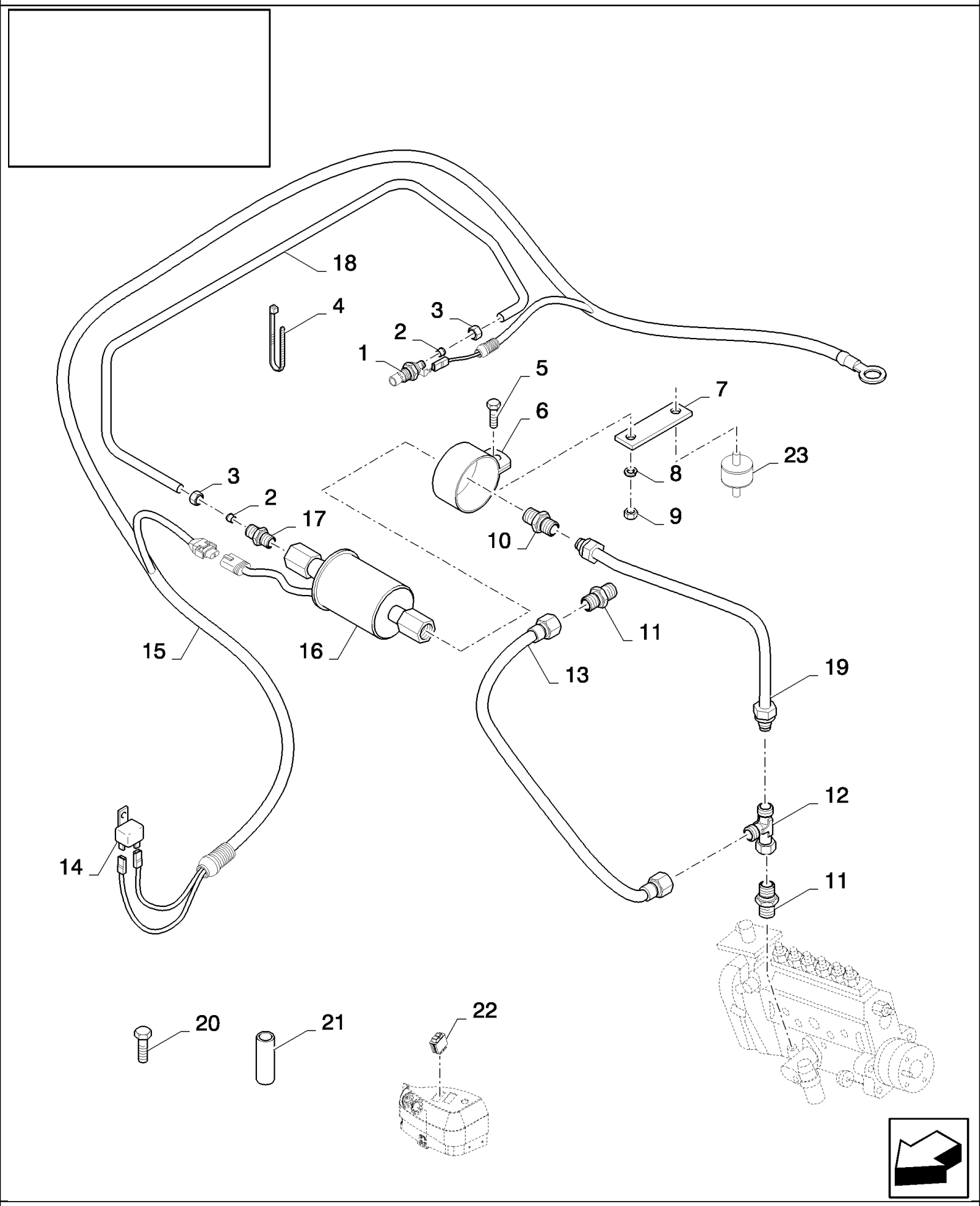

CS660 COMBINE BASE UNIT (1/03-) - Accessories

18.84101145(01) PRE-HEATING KIT

ссылка	Номер детали	Кол-во	Описание
	84101145		DIA KIT, HARVESTER,
1	83956253	1	THERMOSTART,
2	80381102	2	FERRULE,
3	80381101	2	NUT,
4	323597	5	STRAP, CABLE, {PP:80323597}
5	43127	1	BOLT, Hex, M8 x 25, 8.8,
6	86002637	1	CLAMP,
7	84076803	1	PLATE,
8	322358	2	WASHER, SPRING, Belleville, M8,
9	89706690	4	NUT, M8, Cl 8,
10	84076167	1	CONNECTOR, HYD.,
11	84076168	2	CONNECTOR, HYD.,
12	84064562	1	CONNECTOR, HYD.,
13	84441293	1	HOSE,
14	84000651	1	RELAY,
15	84447204	1	HARNESS, WIRE,
16	86002636	1	PUMP, FUEL,
17	86002635	1	CONNECTOR, HYD.,
18	84441327	1	TUBE,
19	84442807	1	TUBE,
20	386045	1	BOLT, Hex, M8 x 45, 8.8,
21	921989	1	SPACER, {PP:80921989}
22	84320653	1	SWITCH,
23	84057804	1	DAMPER,
	80400981	0.005	
	85700684	1	

18.84101146(01) SIGNAL PLATES SUPPORT - ITALY

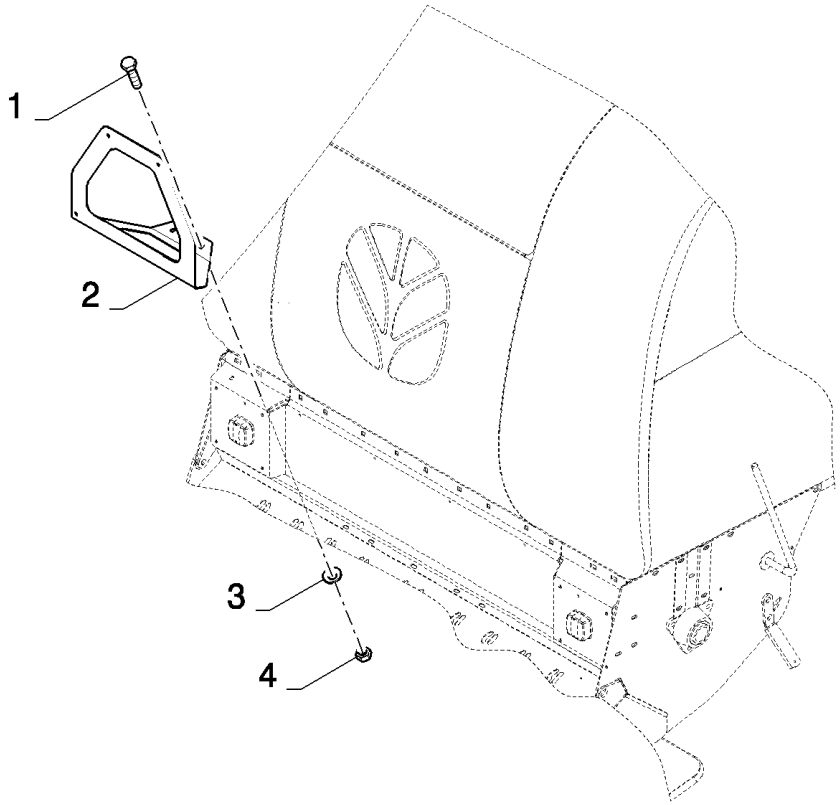

CS660 COMBINE BASE UNIT (1/03-) - Accessories

18.84101146(01) SIGNAL PLATES SUPPORT - ITALY

ссылка	Номер детали	Кол-во	Описание
	84101146		DIA KIT, HARVESTER,
1	120104	2	BOLT, Hex, M8 x 20, 8.8,
2	84447708	1	SUPPORT,
3	322358	2	WASHER, SPRING, Belleville, M8,
4	89706690	2	NUT, M8, Cl 8,

18.84101155(01) PREMIUM SPEAKERS

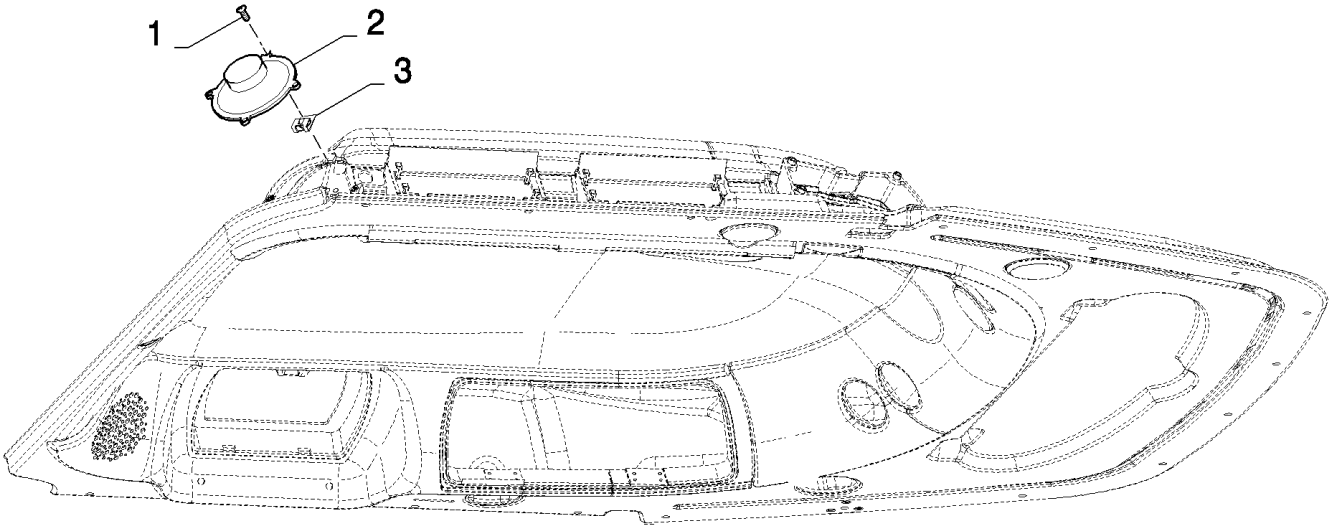

CS660 COMBINE BASE UNIT (1/03-) - Accessories

18.84101155(01) PREMIUM SPEAKERS

ссылка	Номер детали	Кол-во	Описание
	84101155		DIA KIT, HARVESTER,
1	9514970	8	SCREW, {PP:89514970}
2	82014952	2	SPEAKER,
3	84005699	8	CLIP,

18.84101160(01) CORN THRESHING REBUILD KIT - WITH ROTARY SEPARATOR - ABRASIVE

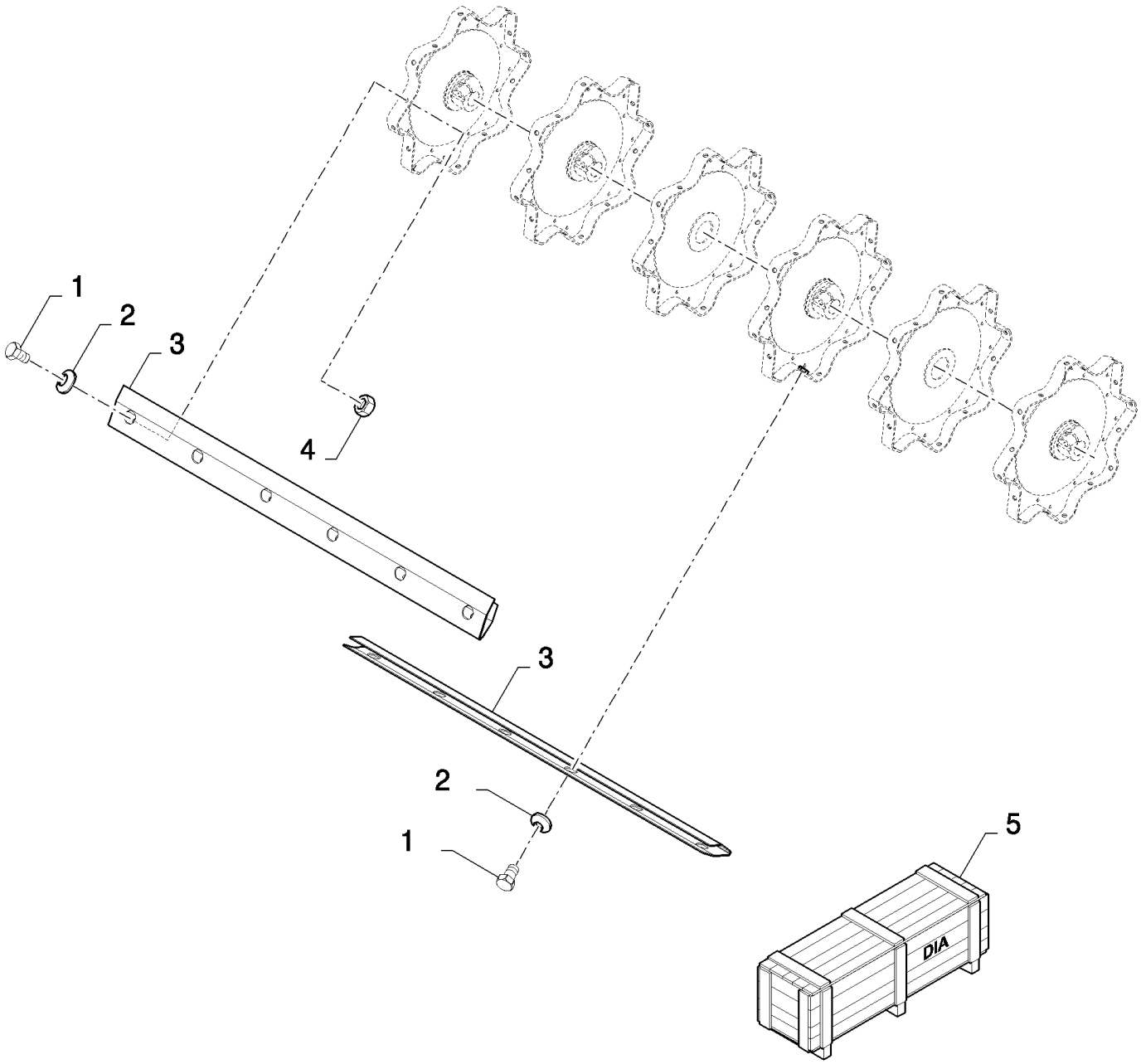

18.84101160(01) CORN THRESHING REBUILD KIT - WITH ROTARY SEPARATOR - ABRASIVE

ссылка	Номер детали	Кол-во	Описание
	84101160		DIA KIT, HARVESTER,
1	300388	48	BOLT, Hex, M12 x 25, 8.8,
2	140046	48	WASHER, SPRING, Belleville, M12,
3	84440498	8	COVER,
4	9706685	36	NUT, M12, Cl 8,
5	84070039	1	DIA KIT, HARVESTER,
5	84085573	1	DIA KIT, HARVESTER,

18.84101160(02) CORN THRESHING REBUILD KIT - WITH ROTARY SEPARATOR - ABRASIVE

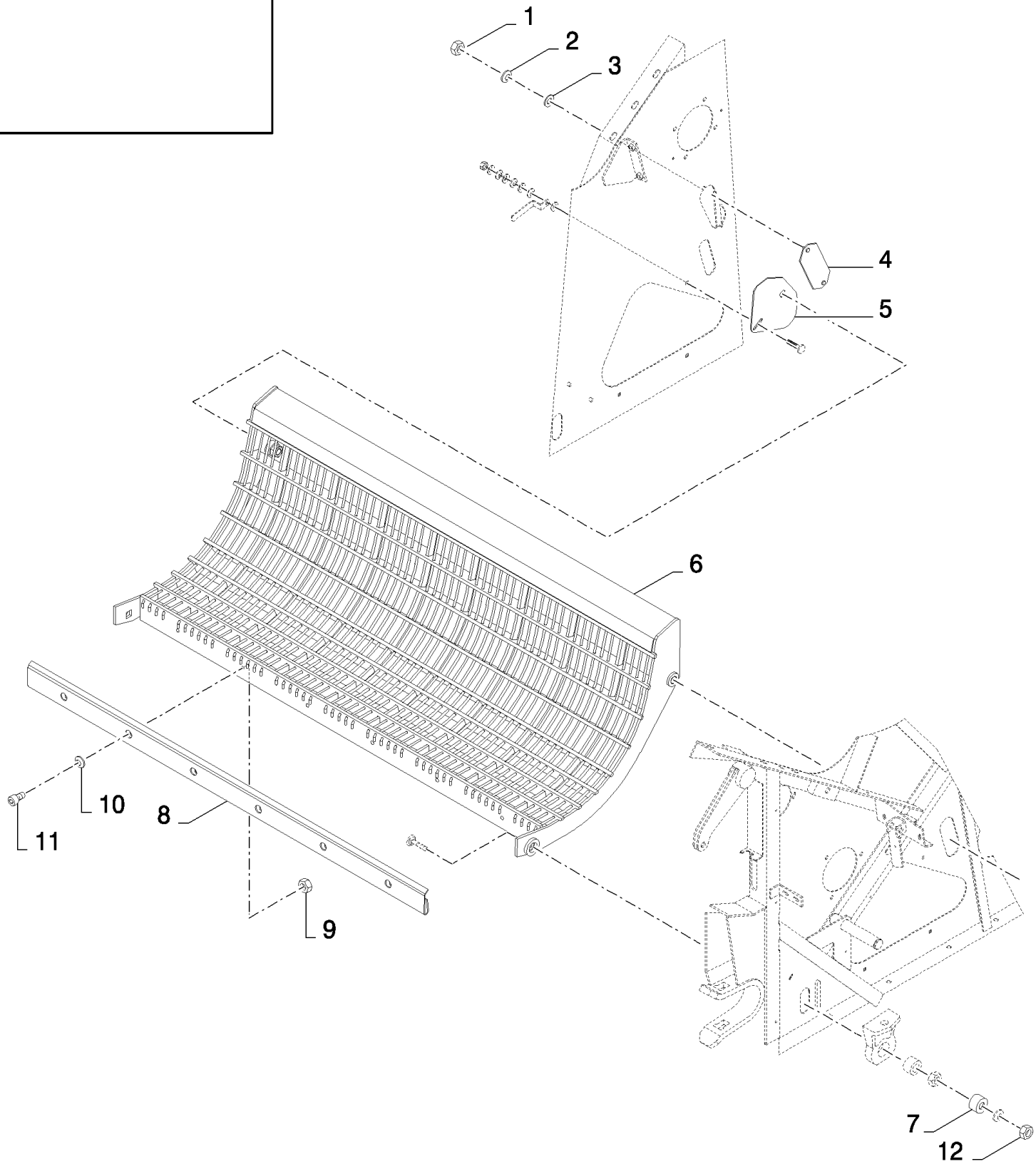

CS660 COMBINE BASE UNIT (1/03-) - Accessories

18.84101160(02) CORN THRESHING REBUILD KIT - WITH ROTARY SEPARATOR - ABRASIVE

ссылка	Номер детали	Кол-во	Описание
1	15896221	2	NUT, M6, Cl 10,
2	322357	2	WASHER, SPRING, Belleville, M6,
3	140040	2	WASHER, M6 x 22 x 2,
4	84443834	1	PLATE, COVER,
5	84443839	1	PLATE, COVER,
6	84076873	1	CONCAVE,
7	84007394	2	BUSHING,
8	84072086	1	SHEET, FRONT,
9	100016	6	NUT, M10, Cl 8,
10	140045	6	WASHER, SPRING, Belleville, M10,
11	120052	6	SCREW, Hex Soc Hd, M10 x 25, 8.8,
12	380424	2	NUT, LOCK, M20 x 2.5, Cl 8,

18.84110338(01) RAIL - STEERING PLATFORM

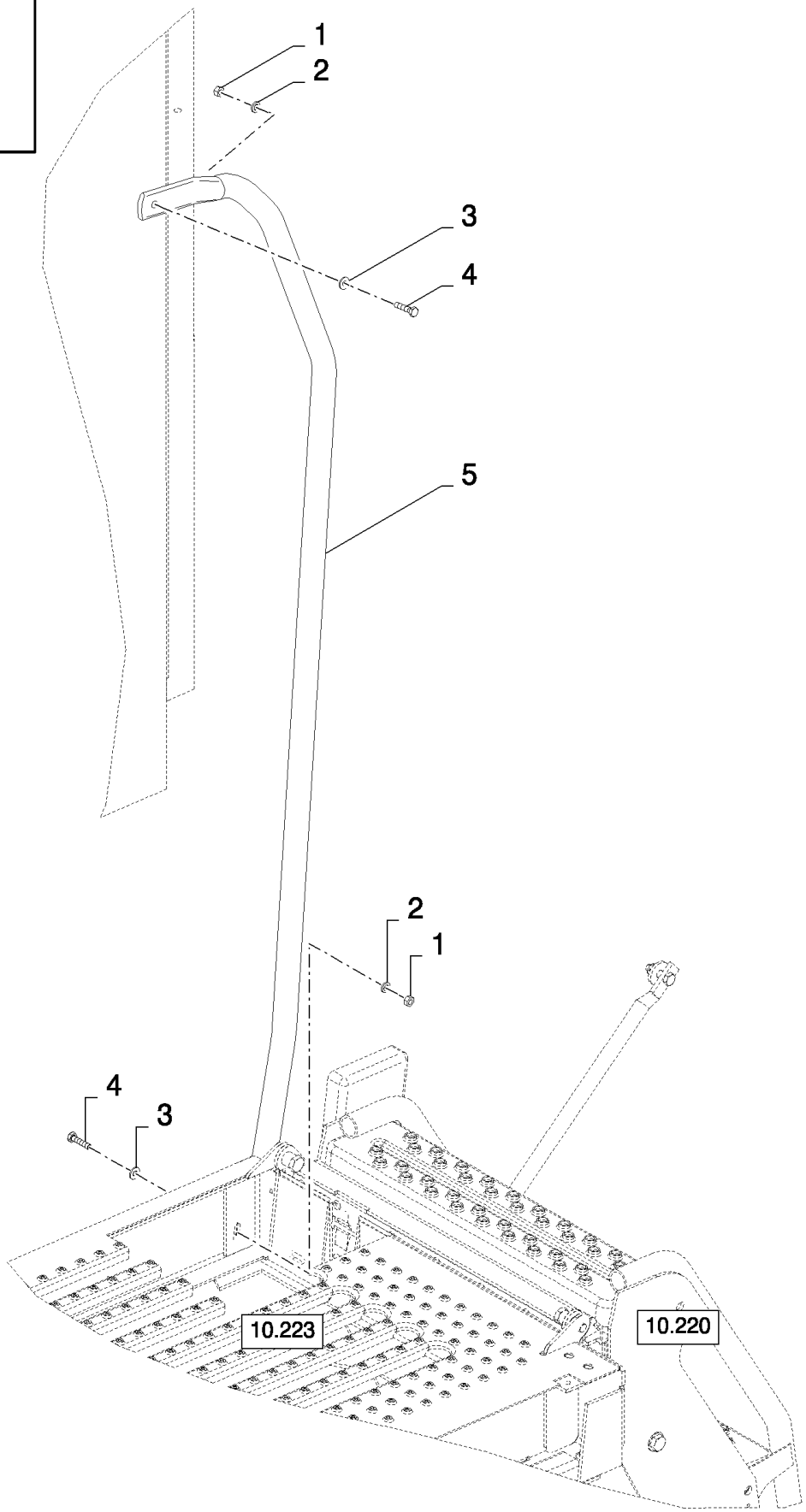

18.84110338(01) RAIL - STEERING PLATFORM

ссылка	Номер детали	Кол-во	Описание
	84110338		DIA KIT, HARVESTER,
1	15896221	2	NUT, M6, Cl 10,
2	86588499	2	WASHER, M6 x 12 x 1.6, 6MM
3	322357	2	WASHER, SPRING, Belleville, M6,
4	86977786	2	BOLT, Hex, M6 x 25, 8.8,
5	84444204	1	TUBE,

18.84110700(01) MISCELLANEOUS - GERMAN SPECIFICATION

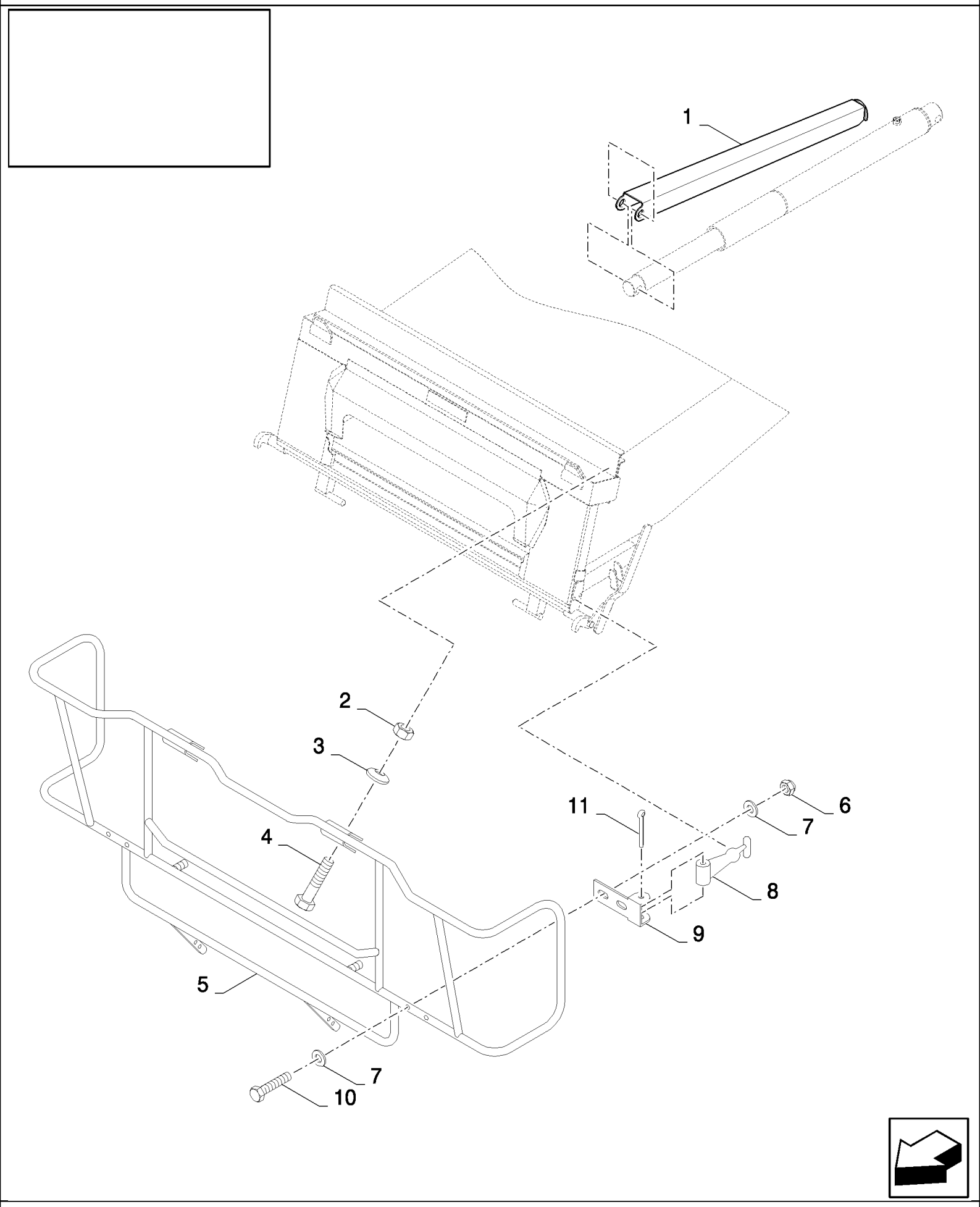

CS660 COMBINE BASE UNIT (1/03-) - Accessories

18.84110700(01) MISCELLANEOUS - GERMAN SPECIFICATION

ссылка	Номер детали	Кол-во	Описание
	84110700		DIA KIT, HARVESTER,
1	84449367	1	SUPPORT,
2	89706690	2	NUT, M8, Cl 8,
3	322358	2	WASHER, SPRING, Belleville, M8,
4	120061	2	BOLT, Hex, M8 x 60, 8.8,
5	419643	1	SHIELD, {PP:80419643}
6	353308	4	NUT, LOCK, M6 x 1, Cl 8,
7	86588450	8	WASHER, M6,
8	353067	2	HANDLE, {PP:80353067}
9	350918	2	BRACKET, {PP:80350918}
10	120102	4	BOLT, Hex, M6 x 40, 8.8, Full Thd,
11	300416	2	PIN, SPLIT (COTTER), {PP:80300416} M4 x 50,

18.84110733(01) REEL SYNCHRONISATION

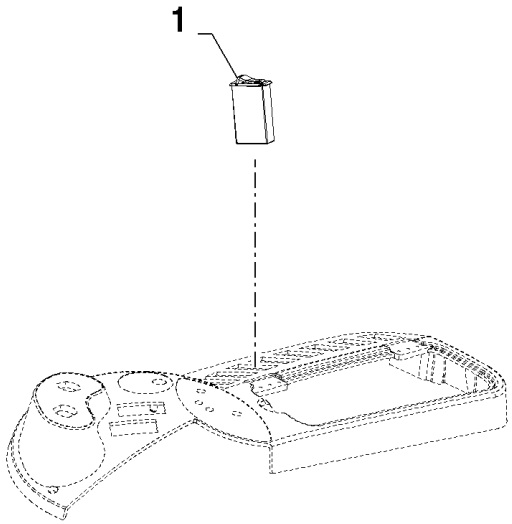

18.84110733(01) REEL SYNCHRONISATION

ссылка	Номер детали	Кол-во	Описание
	84110733		DIA KIT, HARVESTER,
1	84320660	1	SWITCH,

18.84111508(01) CORN DRIVE REBUILD KIT - 3HB

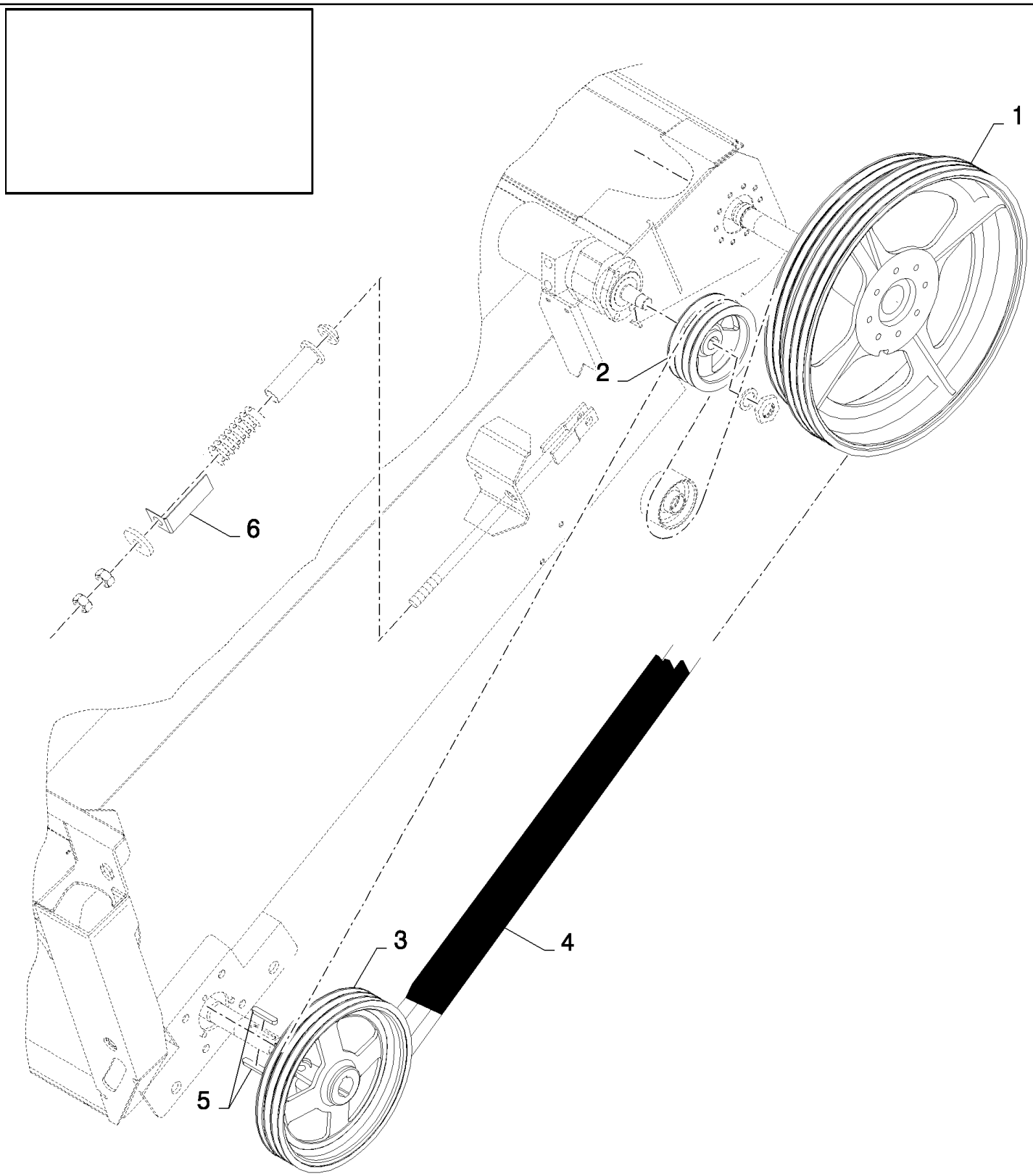

CS660 COMBINE BASE UNIT (1/03-) - Accessories

18.84111508(01) CORN DRIVE REBUILD KIT - 3HB

ссылка	Номер детали	Кол-во	Описание
	84111508		DIA KIT, HARVESTER,
1	84980479	1	PULLEY,
2	84980478	1	PULLEY,
3	84980424	1	PULLEY,
4	84991234	1	BELT, TRANSMISSION,
5	320607	2	KEY, {PP:80320607}
6	84981584	1	INDICATOR,

CS660 COMBINE BASE UNIT (1/03-) - Accessories

18.84111508(02) CORN DRIVE REBUILD KIT - 3HB

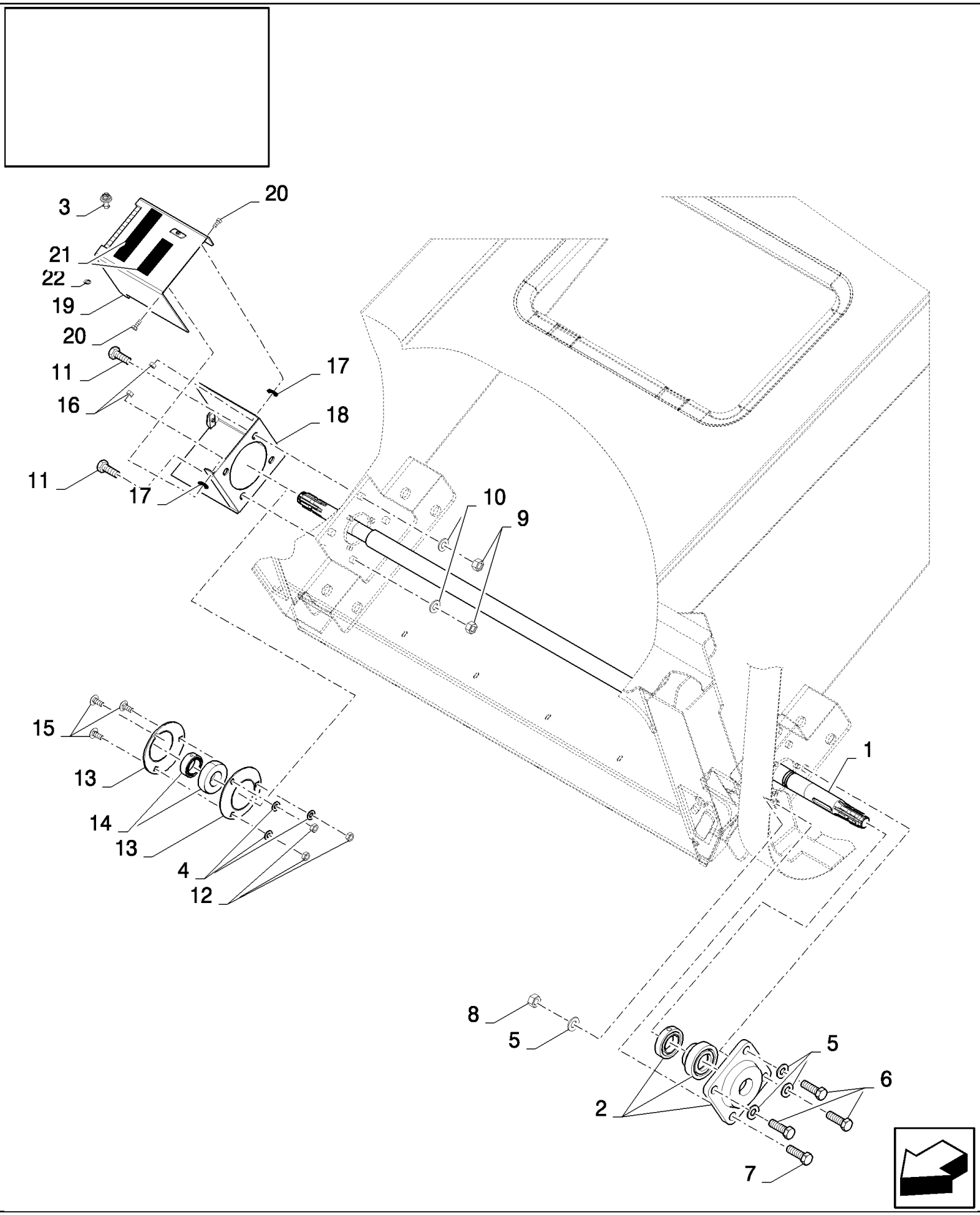

CS660 COMBINE BASE UNIT (1/03-) - Accessories

18.84111508(02) CORN DRIVE REBUILD KIT - 3HB

ссылка	Номер детали	Кол-во	Описание
1	84980405	1	SHAFT,
2	89814384	1	BEARING ASSY,
3	89514603	1	LOCK,
4	140045	3	WASHER, SPRING, Belleville, M10,
5	140048	4	WASHER, SPRING, Belleville, M16,
6	120090	2	BOLT, Hex, M16 x 50, 8.8,
7	120091	2	BOLT, Hex, M16 x 60, 8.8,
8	100020	2	NUT, M16, Cl 8,
9	9706685	4	NUT, M12, Cl 8,
10	140046	4	WASHER, SPRING, Belleville, M12,
11	9706687	4	BOLT, Hex, M12 x 30, 8.8,
12	100016	3	NUT, M10, Cl 8,
13	36403	2	FLANGE, {PP:80036403}
14	322360	1	BEARING, BALL, {PP:80322360}
15	338949	3	BOLT, CARRIAGE, Short NK, M10 x 25, Cl8.8, Full Thd,
16	412152	2	NUT, LOCK, M6 x 1, Cl 8.8,
17	140015	2	WASHER, {PP:80140015} 9MM
18	84981803	1	SHIELD,
19	84981804	1	SHIELD,
20	120100	2	BOLT, Hex, M6 x 20, 8.8,
21	401502	1	STRIP, ANTI-SKID, {PP:80401502} 51mm x 18.3 Roll - Cut to Size
22	9514605	1	RING, LOCKING, {PP:89514605}
	84014117	1	DECAL,
	86503661	0.05	
	80400972	0.05	

18.84111508(03) CORN DRIVE REBUILD KIT - 3HB

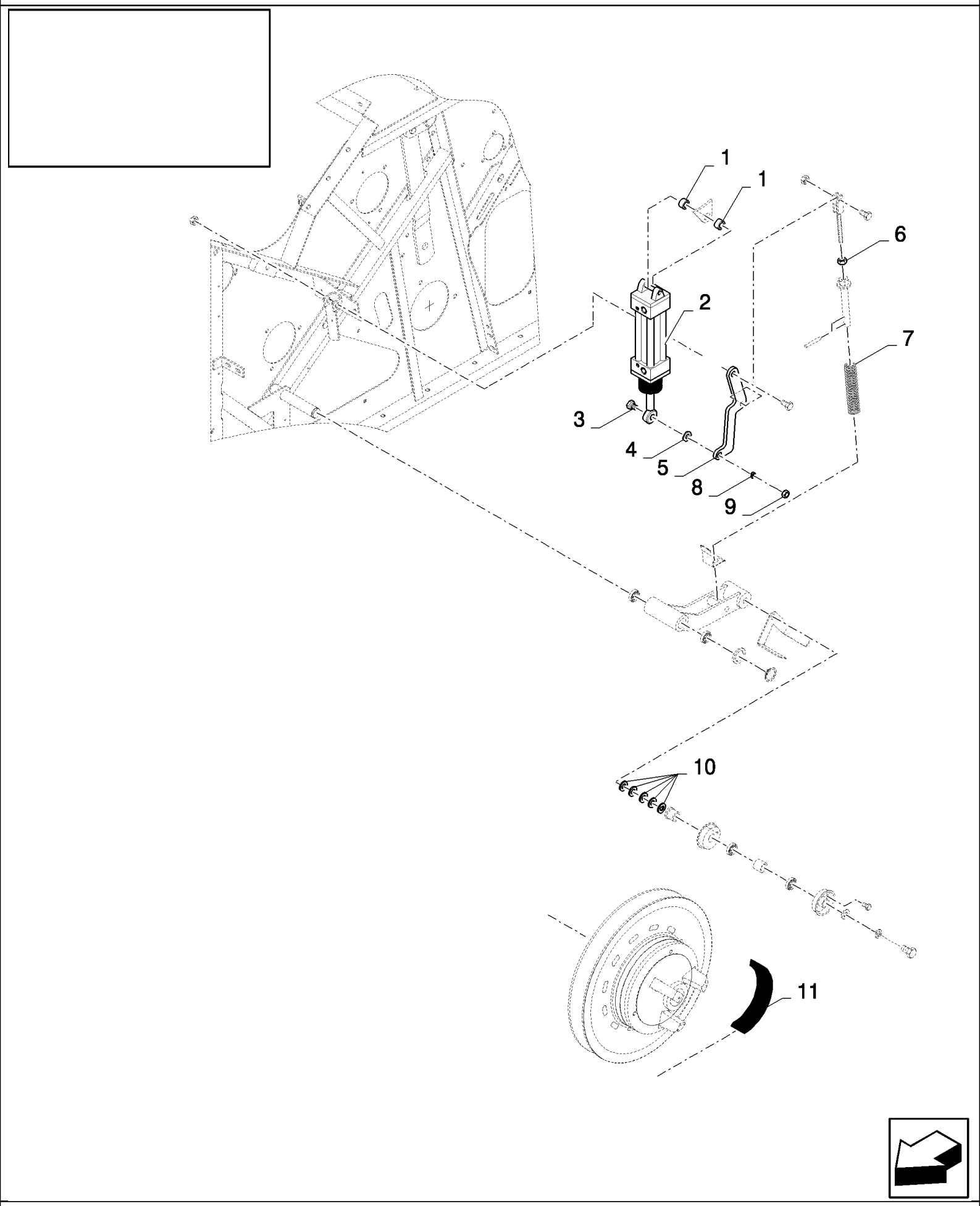

CS660 COMBINE BASE UNIT (1/03-) - Accessories

18.84111508(03) CORN DRIVE REBUILD KIT - 3HB

ссылка	Номер детали	Кол-во	Описание
1	84021736	2	SLEEVE,
2	84432515	1	CYLINDER,
3	120091	1	BOLT, Hex, M16 x 60, 8.8,
4	140093	2	WASHER, {PP:80140093} 17MM
5	84077727	1	LEVER,
6	9706685	1	NUT, M12, Cl 8,
7	84446705	1	SPRING,
8	140048	2	WASHER, SPRING, Belleville, M16,
9	100020	1	NUT, M16, Cl 8,
10	140090	5	WASHER, {PP:80140090} 17MM
11	89817374	1	BELT, TRANSMISSION,

18.84112166(01) AIR GUN & HOSE

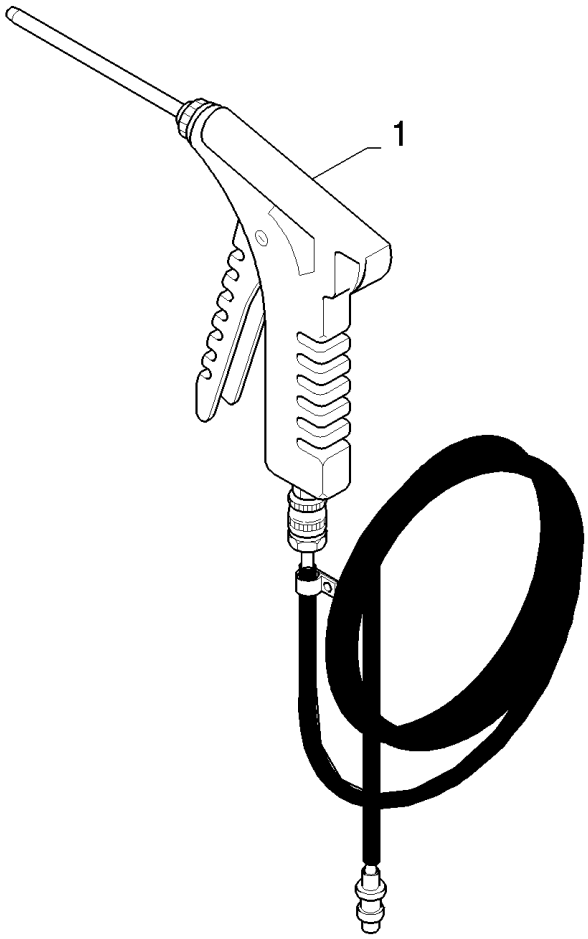

18.84112166(01) AIR GUN & HOSE

ссылка	Номер детали	Кол-во	Описание
	84112166		DIA KIT, HARVESTER,
1	84045084	1	HOSE, FLEXIBLE,

18.87333691(01) BEATER PINS

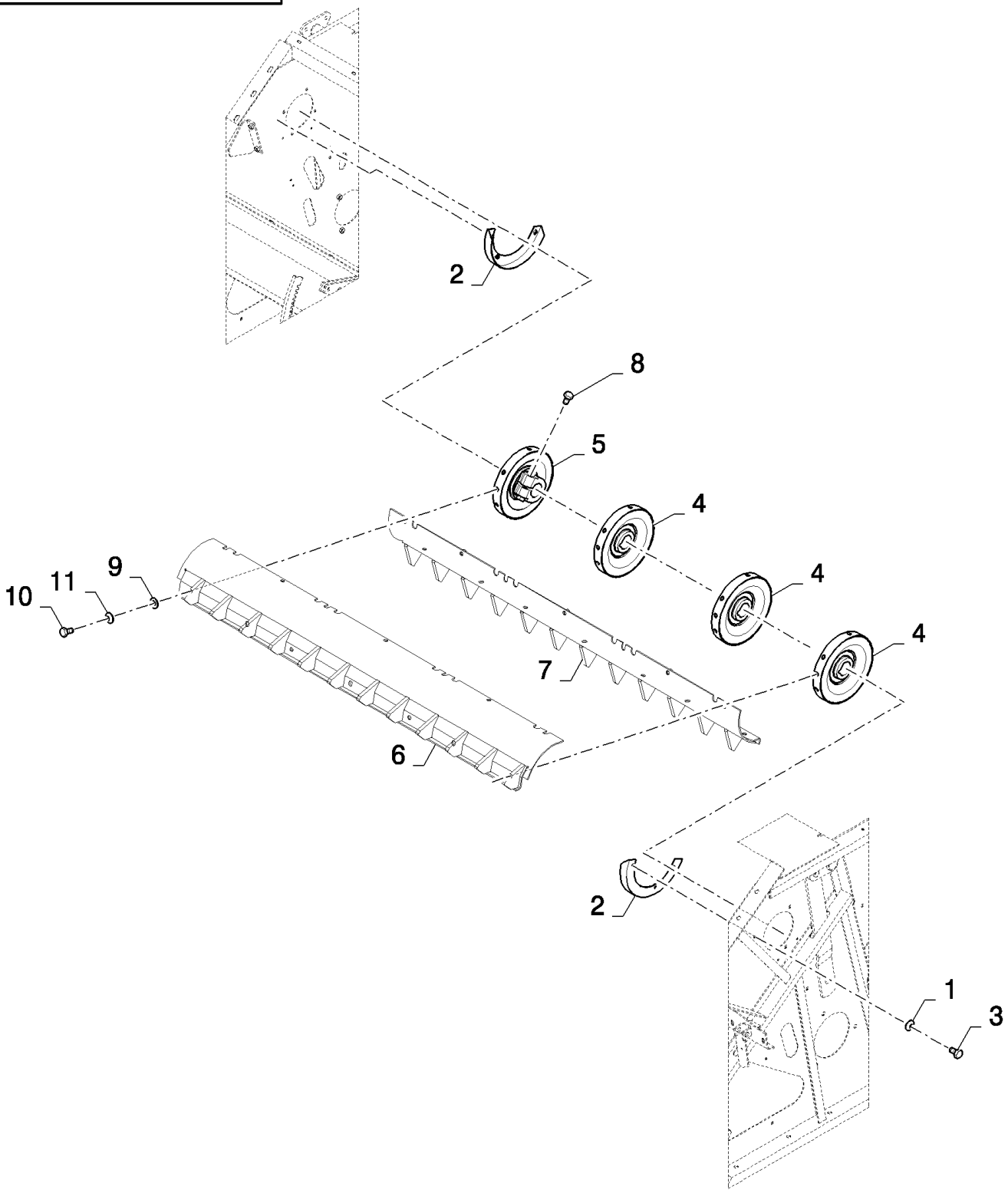

CS660 COMBINE BASE UNIT (1/03-) - Accessories

18.87333691(01) BEATER PINS

ссылка	Номер детали	Кол-во	Описание
	87333691	1	DIA KIT, HARVESTER,
1	322357	6	WASHER, SPRING, Belleville, M6,
2	84435912	2	HALF-RING,
3	120100	6	BOLT, Hex, M6 x 20, 8.8,
4	84435802	3	DISC,
5	84435818	1	DISC,
6	84462627	2	LATH,
7	84462626	2	LATH,
8	350616	4	BOLT, Hex, M16 x 90, 8.8,
9	543043	28	WASHER,
10	9706687	28	BOLT, Hex, M12 x 30, 8.8,
11	140046	28	WASHER, SPRING, Belleville, M12,
	84441900	0.01	Loctite

CS660 COMBINE BASE UNIT (1/03-) - Accessories

18.87336943(01) REBUILD KIT - WHEAT TO RICE - 56MM TEETH - WITH ROTARY SEPARATOR

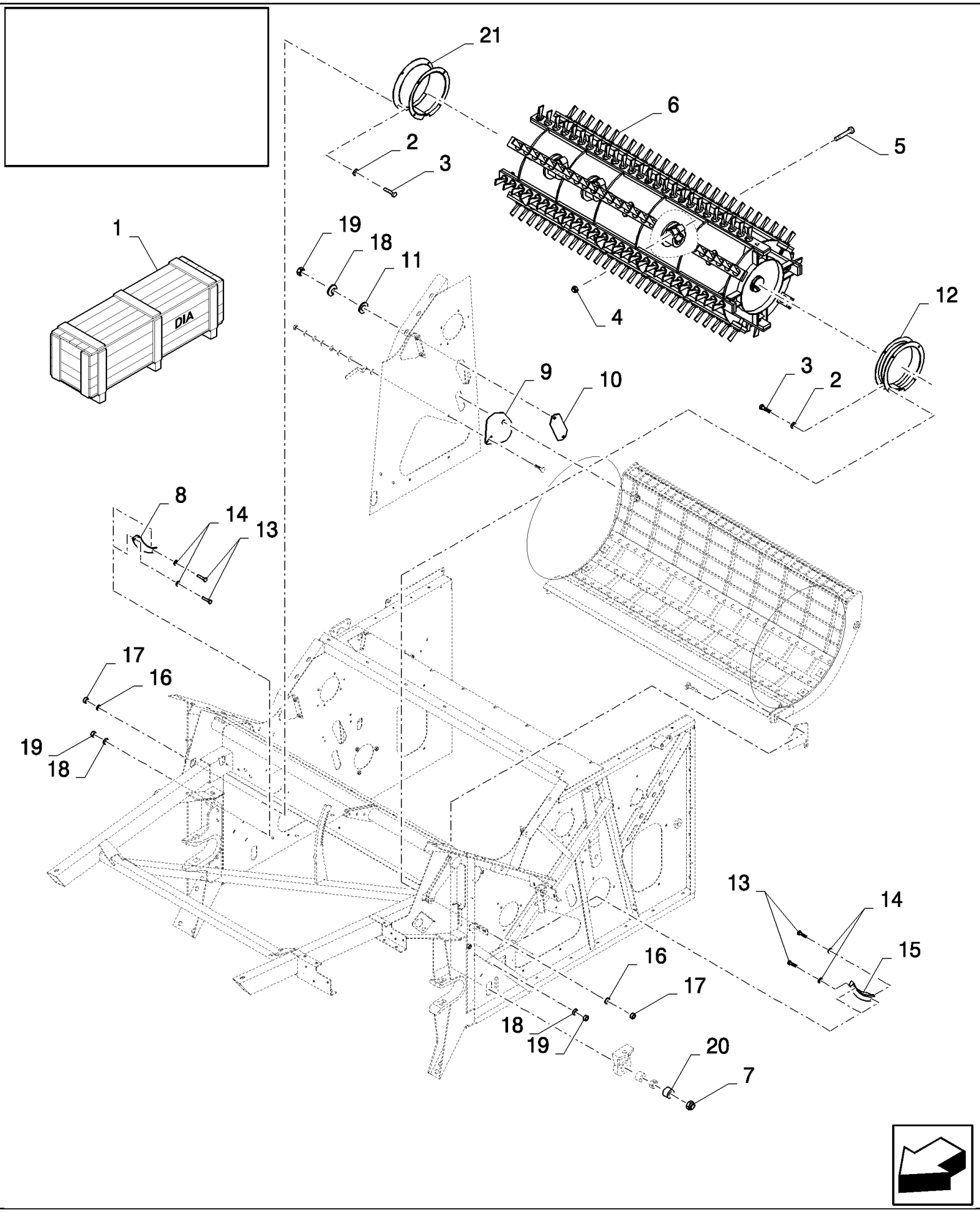

CS660 COMBINE BASE UNIT (1/03-) - Accessories

18.87336943(01) REBUILD KIT - WHEAT TO RICE - 56MM TEETH - WITH ROTARY SEPARATOR

ссылка	Номер детали	Кол-во	Описание
	87336943	1	DIA KIT, HARVESTER,
1	84070039	1	DIA KIT, HARVESTER,
1	84081346	1	DIA KIT, HARVESTER,
1	87333691	1	DIA KIT, HARVESTER,
2	140016	6	WASHER, M8 x 16 x 1.6,
3	120104	6	BOLT, Hex, M8 x 20, 8.8,
4	86000441	4	NUT, LOCK, M16 x 2, Cl 8,
5	350616	4	BOLT, Hex, M16 x 90, 8.8,
6	84452125	1	DRUM,
7	412180	2	NUT, LOCK, M20 x 2.5, Cl 8, M20
8	354593	1	SHIELD,
9	84443839	1	PLATE, COVER,
10	84443834	1	PLATE, COVER,
11	140040	2	WASHER, M6 x 22 x 2,
12	84452645	1	PROTECTING COVER,
13	120100	4	BOLT, Hex, M6 x 20, 8.8,
14	412649	4	WASHER, SPRING, Belleville, M6,
15	354592	1	SHIELD,
16	322358	6	WASHER, SPRING, Belleville, M8,
17	9706690	6	NUT, M8, Cl 8,
18	322357	6	WASHER, SPRING, Belleville, M6,
19	15896221	6	NUT, M6, Cl 10,
20	84007394	2	BUSHING,
21	424748	1	SHIELD,

18.87336943(02) REBUILD KIT - WHEAT TO RICE - 56MM TEETH - WITH ROTARY SEPARATOR

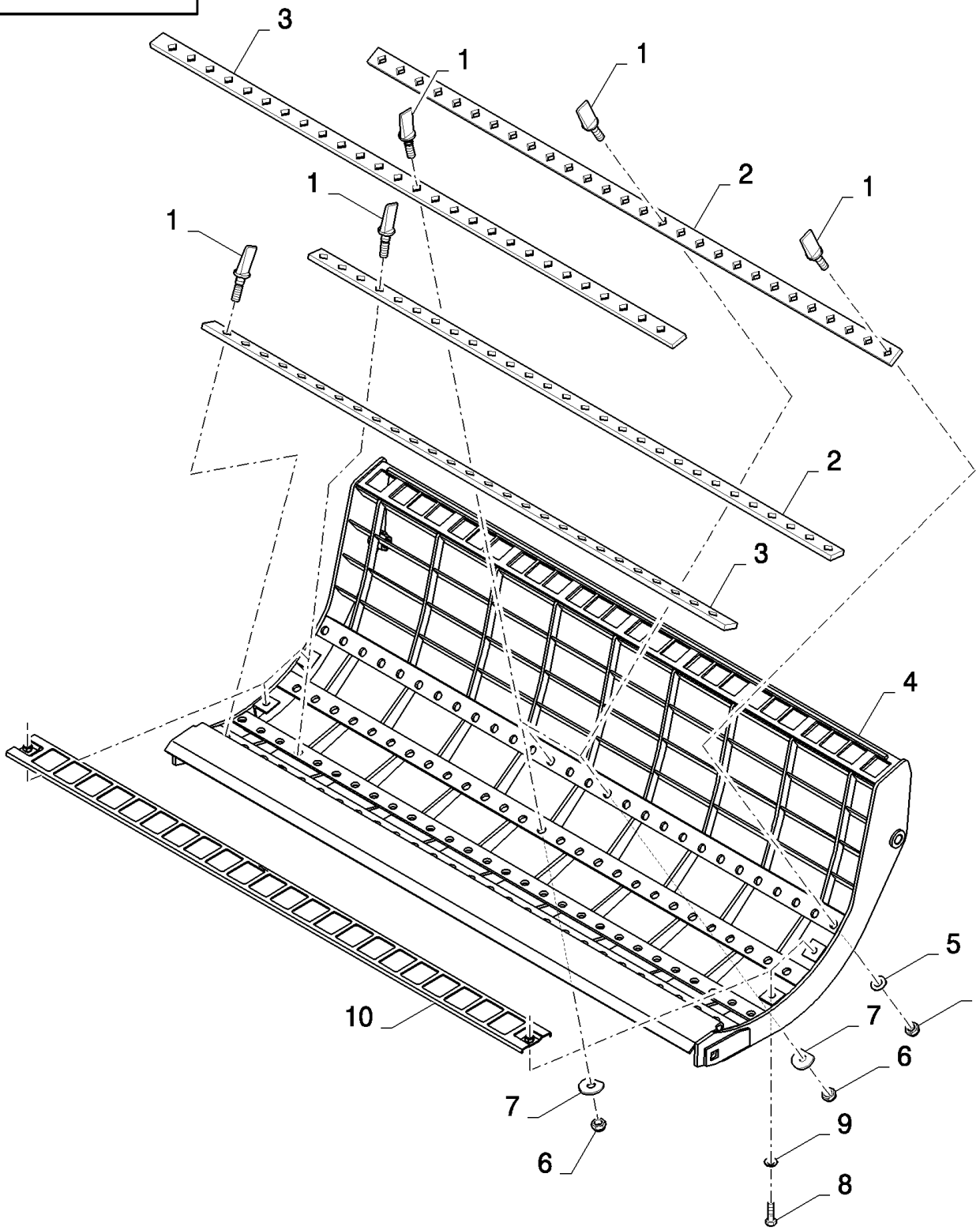

CS660 COMBINE BASE UNIT (1/03-) - Accessories

18.87336943(02) REBUILD KIT - WHEAT TO RICE - 56MM TEETH - WITH ROTARY SEPARATOR

ссылка	Номер детали	Кол-во	Описание
1	396935	81	TOOTH, RICE,
2	411298	2	PLATE, FIXING,
3	411304	2	PLATE, FIXING,
4	84437361	1	CONCAVE,
5	394631	78	WASHER,
6	86000441	81	NUT, LOCK, M16 x 2, Cl 8,
7	333041	3	WASHER,
8	43138	4	BOLT, Hex, M10 x 20, 8.8, Full Thd,
9	140045	4	WASHER, SPRING, Belleville, M10,
10	84038642	2	GRILLE,

18.87336943(03) REBUILD KIT - WHEAT TO RICE - 56MM TEETH - WITH ROTARY SEPARATOR

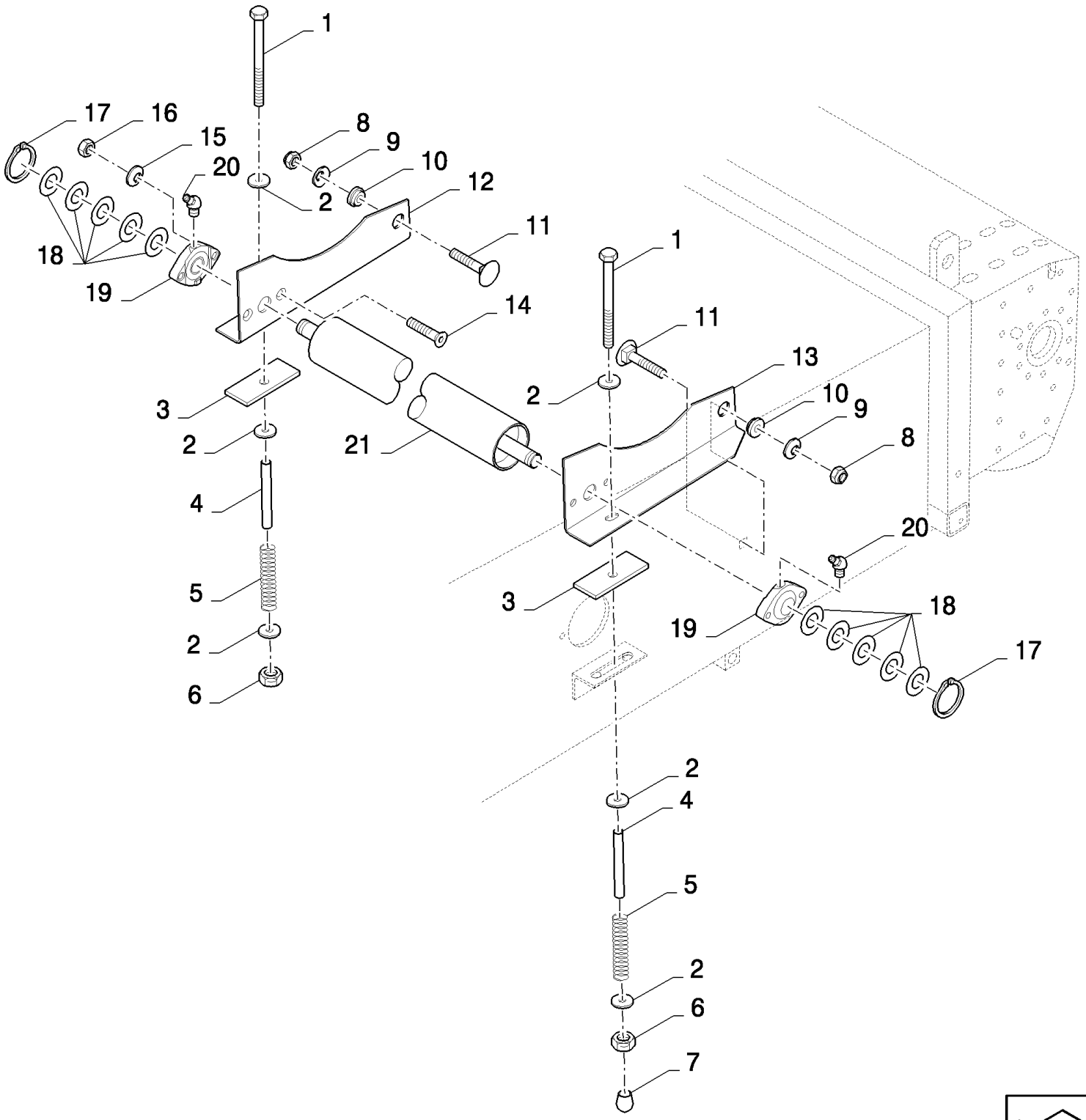

CS660 COMBINE BASE UNIT (1/03-) - Accessories

18.87336943(03) REBUILD KIT - WHEAT TO RICE - 56MM TEETH - WITH ROTARY SEPARATOR

ссылка	Номер детали	Кол-во	Описание
1	412579	2	BOLT, Hex, M10 x 230, 8.8, M10x230
2	9832748	6	WASHER, 11MM
3	9500474	2	PAD, RUBBER,
4	84334391	2	TUBE,
5	354085	2	SPRING,
6	412141	2	NUT, LOCK, M10 x 1.5, Cl 8,
7	84005018	1	PLUG,
8	100038	2	NUT, LOCK, M12 x 1.75, Cl 8,
9	140046	2	WASHER, SPRING, Belleville, M12,
10	9500475	2	BUSHING,
11	120044	2	BOLT, CARRIAGE, Short NK, M12 x 30, Cl8.8, Full Thd,
12	84039236	1	SUPPORT, RH
13	84039235	1	SUPPORT, LH
14	412466	4	SCREW, Hex Soc Flat Hd, M10 x 35, 8.8, M10x40
15	140045	4	WASHER, SPRING, Belleville, M10,
16	100016	4	NUT, M10, Cl 8,
17	370002	2	RING, SNAP, M25, Ext,
18	140229	10	WASHER, 26MM
19	9514667	2	BEARING ASSY,
20	84814929	2	NIPPLE, LUBE,
21	84071544	1	ROLLER, CONVEYOR,
	84334829	2	DECAL,
	86503661	0.01	GREASE
	400972	0.01	GREASE
	9504635	0.01	Loctite

18.87336943(04) REBUILD KIT - WHEAT TO RICE - 56MM TEETH - WITH ROTARY SEPARATOR

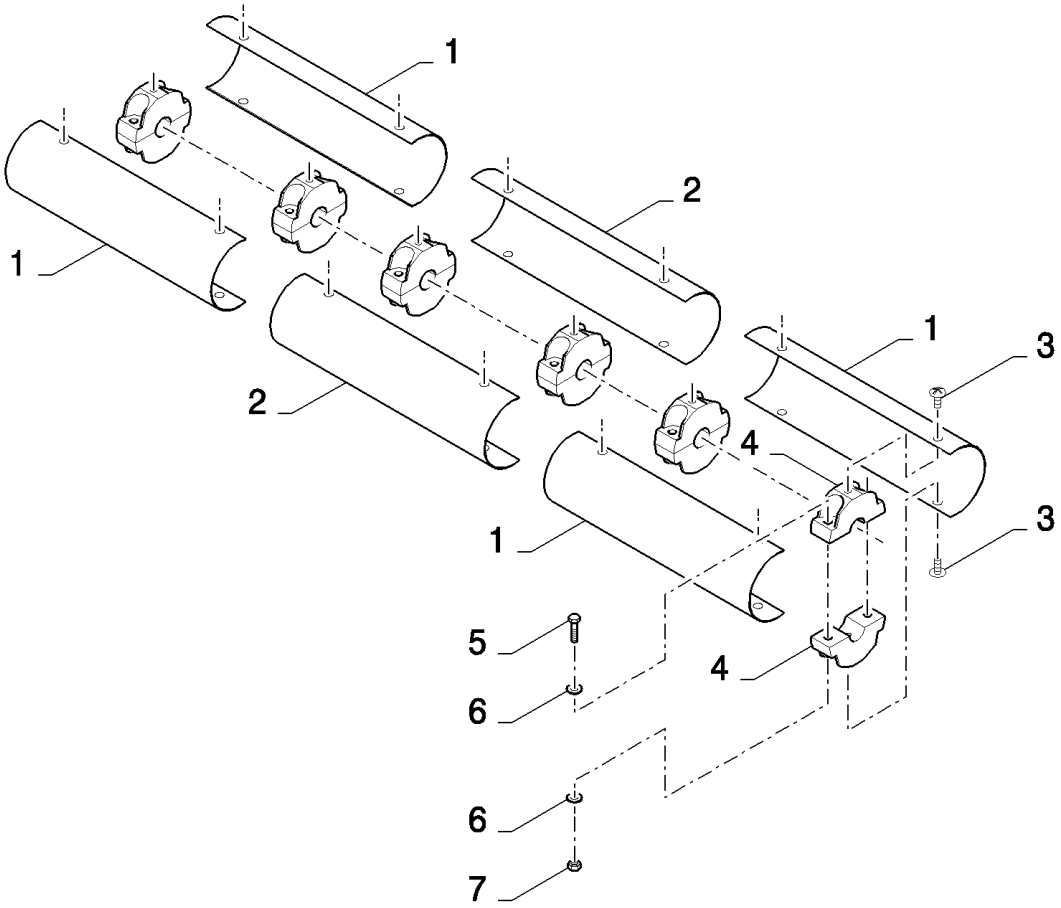

CS660 COMBINE BASE UNIT (1/03-) - Accessories

18.87336943(04) REBUILD KIT - WHEAT TO RICE - 56MM TEETH - WITH ROTARY SEPARATOR

ссылка	Номер детали	Кол-во	Описание
1	84022121	4	SHIELD,
2	84449037	2	SHIELD,
3	62087	12	SCREW, M8x20
4	89513095	12	CLAMP,
5	386045	12	BOLT, Hex, M8 x 45, 8.8,
6	86511315	24	WASHER, M8 x 16 x 1.6,
7	86629542	12	NUT, LOCK, M8 x 1.25, Cl 8,
	401624	0.02	

18.87336945(01) GRAIN THRESHING REBUILD KIT - FROM RICE VERSION - WITH ROTARY SEPARATOR

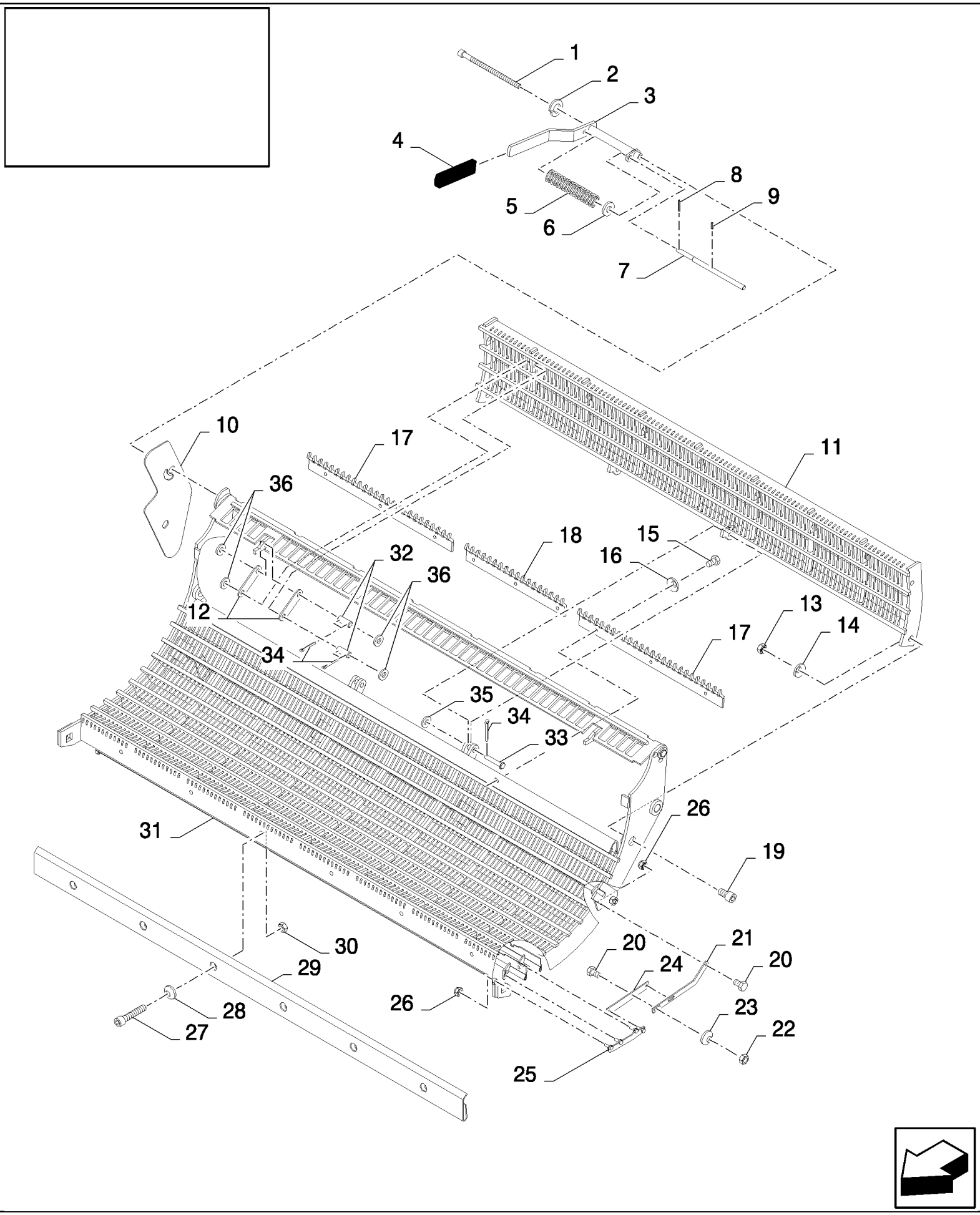

CS660 COMBINE BASE UNIT (1/03-) - Accessories

18.87336945(01) GRAIN THRESHING REBUILD KIT - FROM RICE VERSION - WITH ROTARY SEPARATOR

ссылка	Номер детали	Кол-во	Описание
	87336945	1	DIA KIT, HARVESTER,
1	84077695	1	SCREW, M12x200
2	412123	1	WASHER, LOCK, M12,
3	84072041	1	LEVER,
4	84439164	1	HANDLE GRIP,
5	321215	1	SPRING,
6	84439368	1	WASHER, 12.5MM
7	84072023	1	SHAFT,
8	9823343	1	PIN, LOCK, M5 x 65, Slotted,
9	300865	1	PIN, LOCK, M3 x 20, Slotted,
10	84431177	1	PLATE,
11	84071997	1	CONCAVE,
12	84441795	4	LEVER,
13	100020	2	NUT, M16, Cl 8,
14	140048	2	WASHER, SPRING, Belleville, M16,
15	120104	9	BOLT, Hex, M8 x 20, 8.8,
16	322358	9	WASHER, SPRING, Belleville, M8,
17	84432976	2	RAKE,
18	84431562	1	RAKE,
19	84077750	2	SCREW, M16x30
20	120100	6	BOLT, Hex, M6 x 20, 8.8,
21	84443709	2	LEVER,
22	15896221	4	NUT, M6, Cl 10,
23	322357	4	WASHER, SPRING, Belleville, M6,
24	84443708	2	LEVER,
25	84443710	2	LEVER,
26	353308	10	NUT, LOCK, M6 x 1, Cl 8,
27	120052	6	SCREW, Hex Soc Hd, M10 x 25, 8.8,
28	140045	6	WASHER, SPRING, Belleville, M10,
29	84072086	1	SHEET, FRONT,
30	100016	6	NUT, M10, Cl 8,
31	84072139	1	CONCAVE,
32	80324907	4	PIN, ROLL,
33	321018	2	PIN, CLEVIS, M12 x 40,
34	130003	10	PIN, SPLIT (COTTER), M3.2 x 20,
35	86511324	2	WASHER, M12 x 24 x 2.5,
36	378245	8	WASHER, M12,

18.87336945(02) GRAIN THRESHING REBUILD KIT - FROM RICE VERSION - WITH ROTARY SEPARATOR

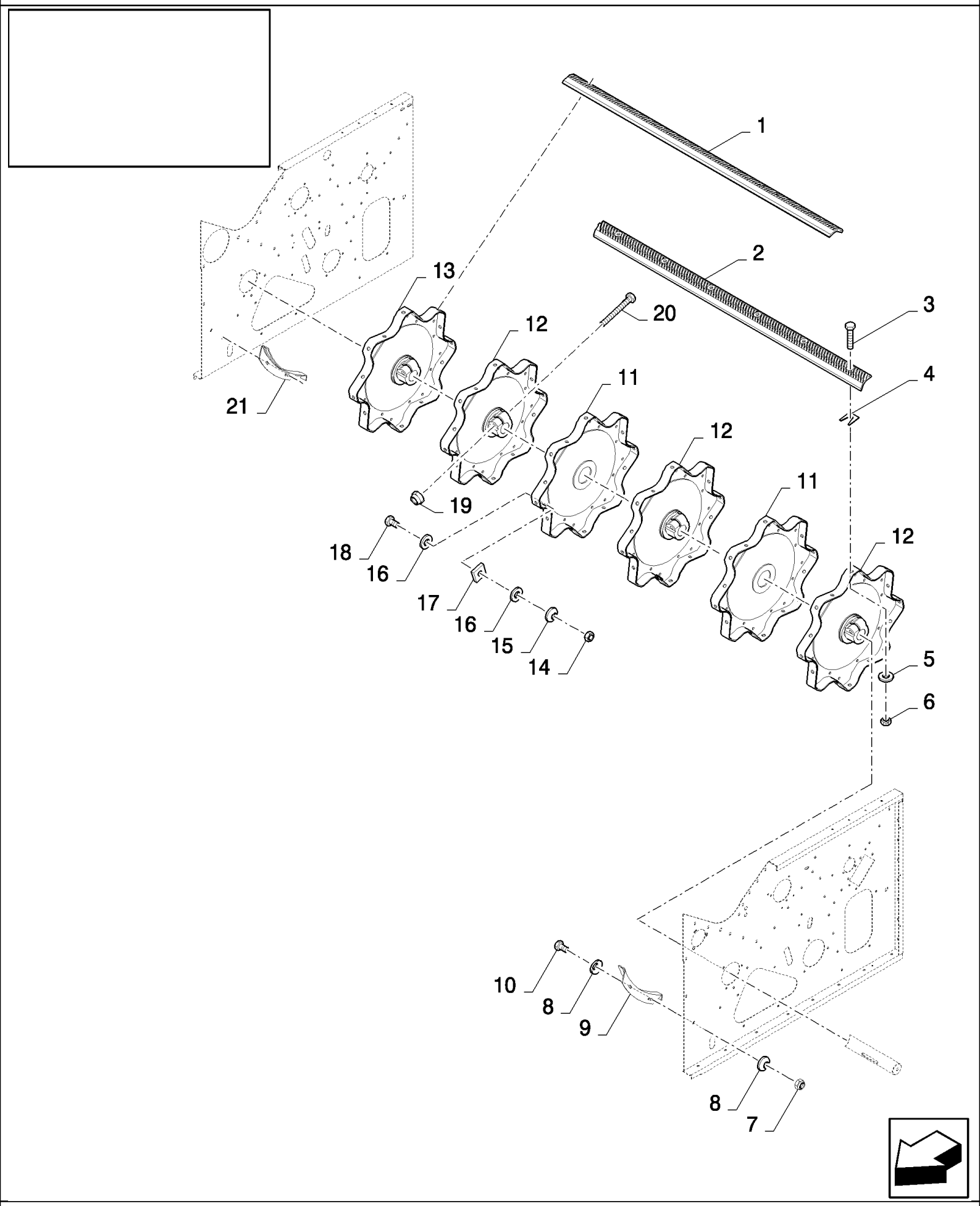

CS660 COMBINE BASE UNIT (1/03-) - Accessories

18.87336945(02) GRAIN THRESHING REBUILD KIT - FROM RICE VERSION - WITH ROTARY SEPARATOR

ссылка	Номер детали	Кол-во	Описание
1	84438637	2	RASP BAR SET, LH
2	84438638	2	RASP BAR SET, RH
3	385376	48	SCREW, M12x30
4	80481491	24	PLATE, ADJUSTING,
5	394630	48	WASHER,
6	9706685	48	NUT, M12, Cl 8,
7	353308	4	NUT, LOCK, M6 x 1, Cl 8,
8	322357	8	WASHER, SPRING, Belleville, M6,
9	333222	1	ANGLE BAR,
10	120100	4	BOLT, Hex, M6 x 20, 8.8,
11	394487	2	DISC,
12	84440731	3	DISC,
13	84440736	1	DISC,
14	89706690	6	NUT, M8, Cl 8,
15	322358	6	WASHER, SPRING, Belleville, M8,
16	140041	12	WASHER, M8 x 28 x 3,
17	351518	6	PLATE, ADJUSTING,
18	43128	6	BOLT, Hex, M8 x 30, 8.8,
19	86000441	4	NUT, LOCK, M16 x 2, Cl 8,
20	350616	4	BOLT, Hex, M16 x 90, 8.8,
21	335307	1	ANGLE BAR,
	86503661	0.04	Grease

18.87336946(01) CORN THRESHING REBUILD KIT - FROM CEREALS VERSION - WITH ROTARY SEPARATOR - ABRASIVE

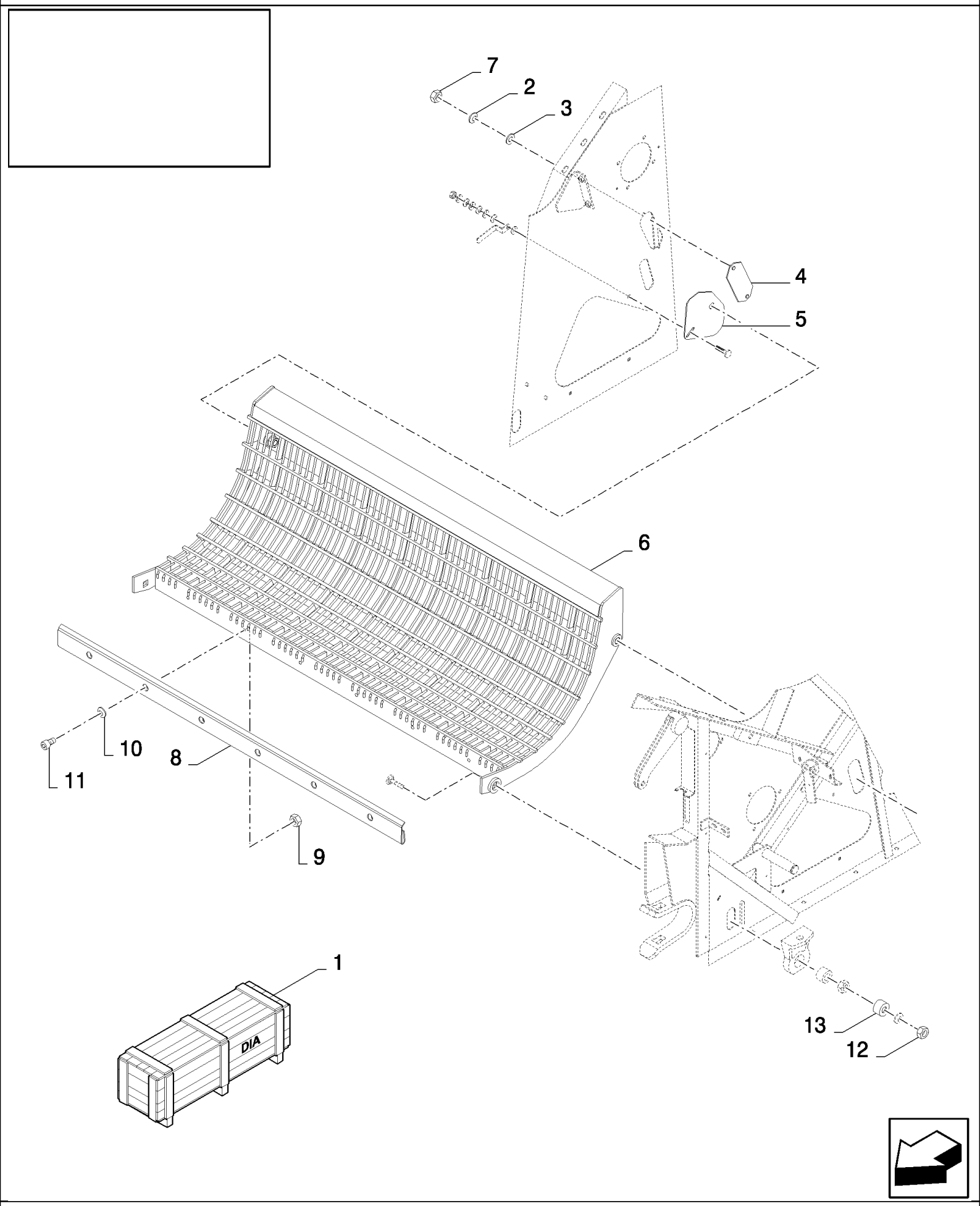

CS660 COMBINE BASE UNIT (1/03-) - Accessories

18.87336946(01) CORN THRESHING REBUILD KIT - FROM CEREALS VERSION - WITH ROTARY SEPARATOR - ABRASIVE

ссылка	Номер детали	Кол-во	Описание
	87336946	1	DIA KIT, HARVESTER,
1	84070039	1	DIA KIT, HARVESTER,
2	322357	2	WASHER, SPRING, Belleville, M6,
3	140040	2	WASHER, M6 x 22 x 2,
4	84443834	1	PLATE, COVER,
5	84443839	1	PLATE, COVER,
6	84076873	1	CONCAVE,
7	15896221	2	NUT, M6, Cl 10,
8	84072086	1	SHEET, FRONT,
9	100016	6	NUT, M10, Cl 8,
10	140045	6	WASHER, SPRING, Belleville, M10,
11	120052	6	SCREW, Hex Soc Hd, M10 x 25, 8.8,
12	380424	2	NUT, LOCK, M20 x 2.5, Cl 8,
13	84007394	2	BUSHING,

18.87336946(02) CORN THRESHING REBUILD KIT - FROM CEREALS VERSION - WITH ROTARY SEPARATOR - ABRASIVE

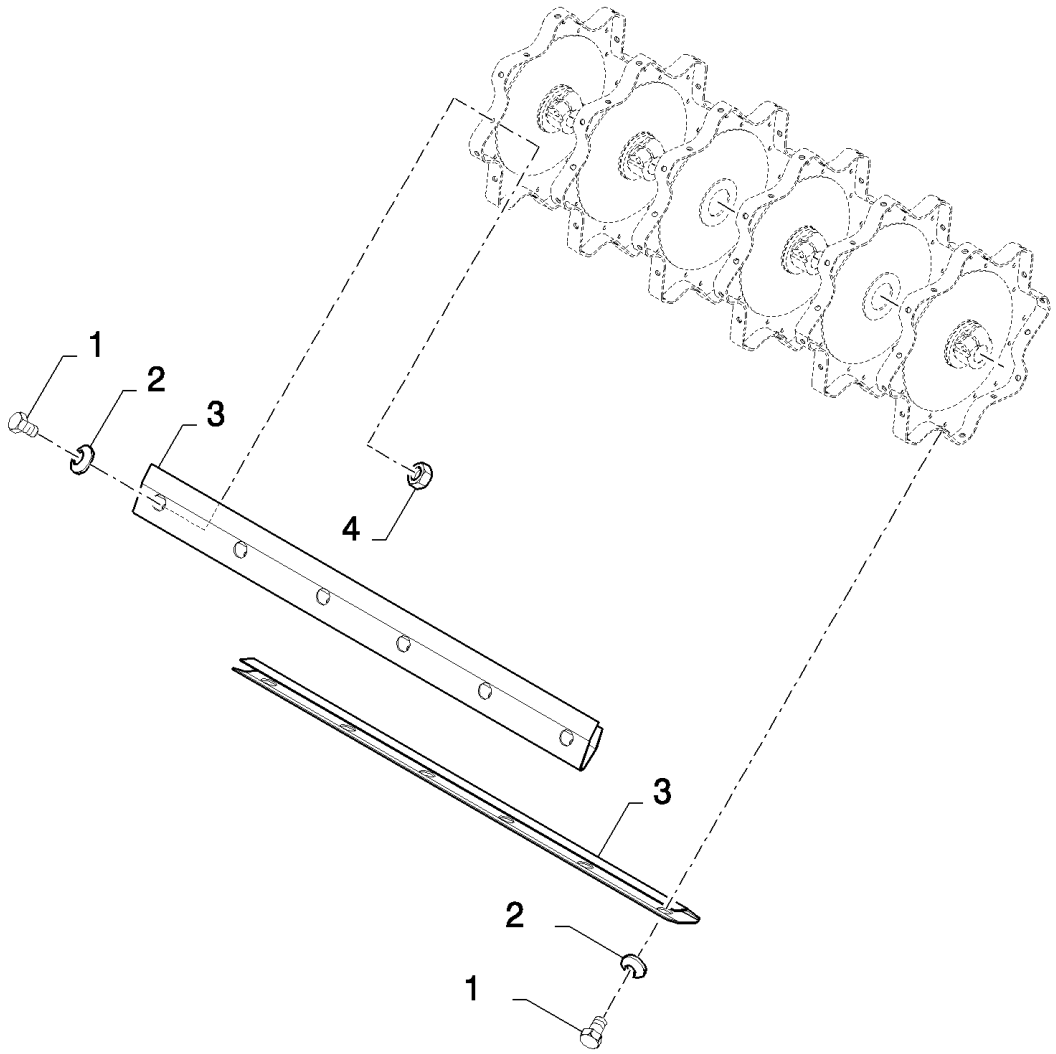

CS660 COMBINE BASE UNIT (1/03-) - Accessories

18.87336946(02) CORN THRESHING REBUILD KIT - FROM CEREALS VERSION - WITH ROTARY SEPARATOR - ABRASIVE

ссылка	Номер детали	Кол-во	Описание
1	300388	48	BOLT, Hex, M12 x 25, 8.8, M12x25
2	140046	48	WASHER, SPRING, Belleville, M12,
3	84440498	8	COVER,
4	9706685	36	NUT, M12, Cl 8,

18.87338847(01) CORN DRIVE REBUILD KIT - 3HB

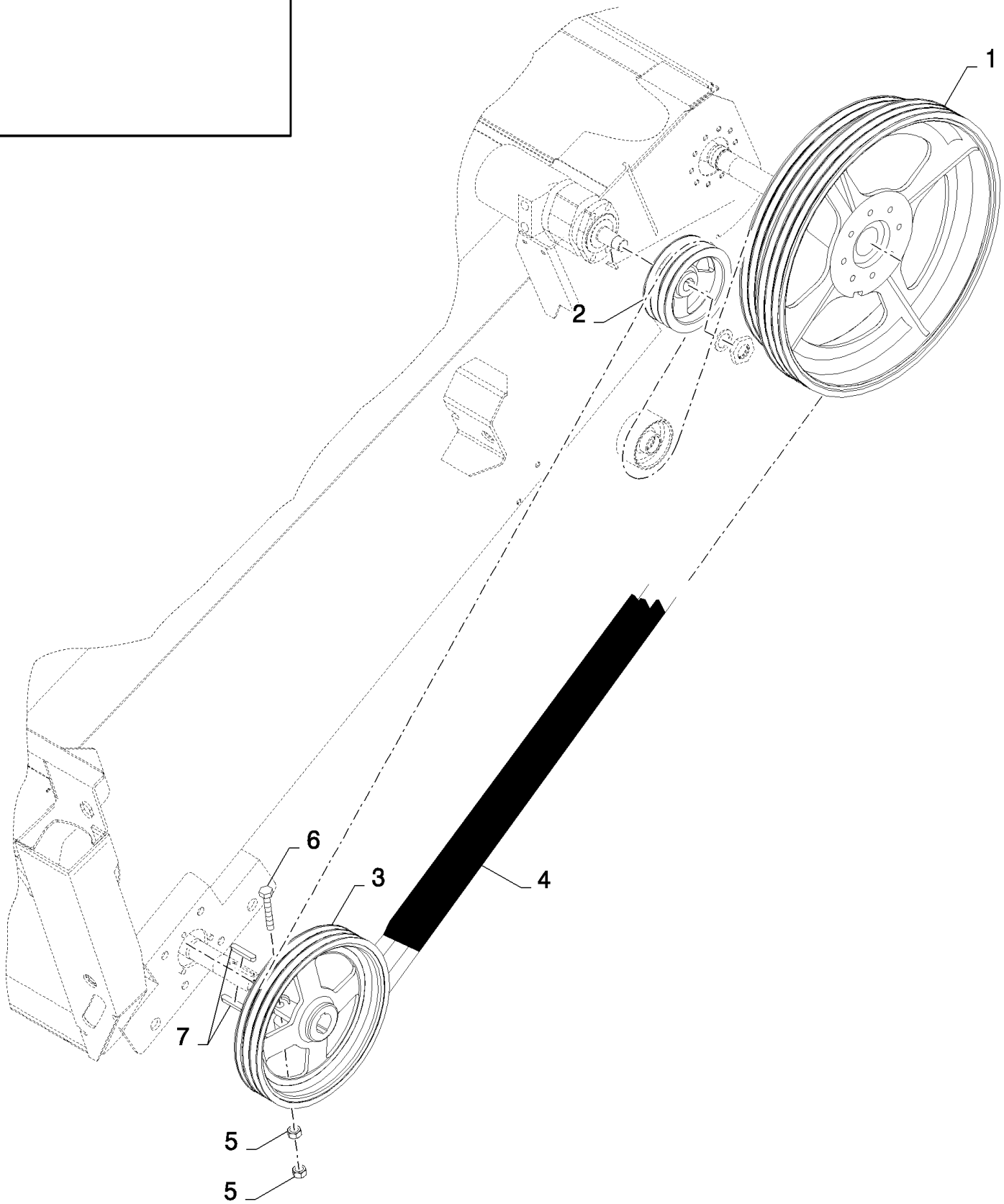

CS660 COMBINE BASE UNIT (1/03-) - Accessories

18.87338847(01) CORN DRIVE REBUILD KIT - 3HB

ссылка	Номер детали	Кол-во	Описание
	87338847	1	DIA KIT, HARVESTER,
1	84980479	1	PULLEY,
2	84980478	1	PULLEY,
3	84980424	1	PULLEY,
4	84991234	1	BELT, TRANSMISSION,
5	100020	2	NUT, M16, Cl 8,
6	350616	1	BOLT, Hex, M16 x 90, 8.8,
7	320607	2	KEY,

18.87338847(02) CORN DRIVE REBUILD KIT - 3HB

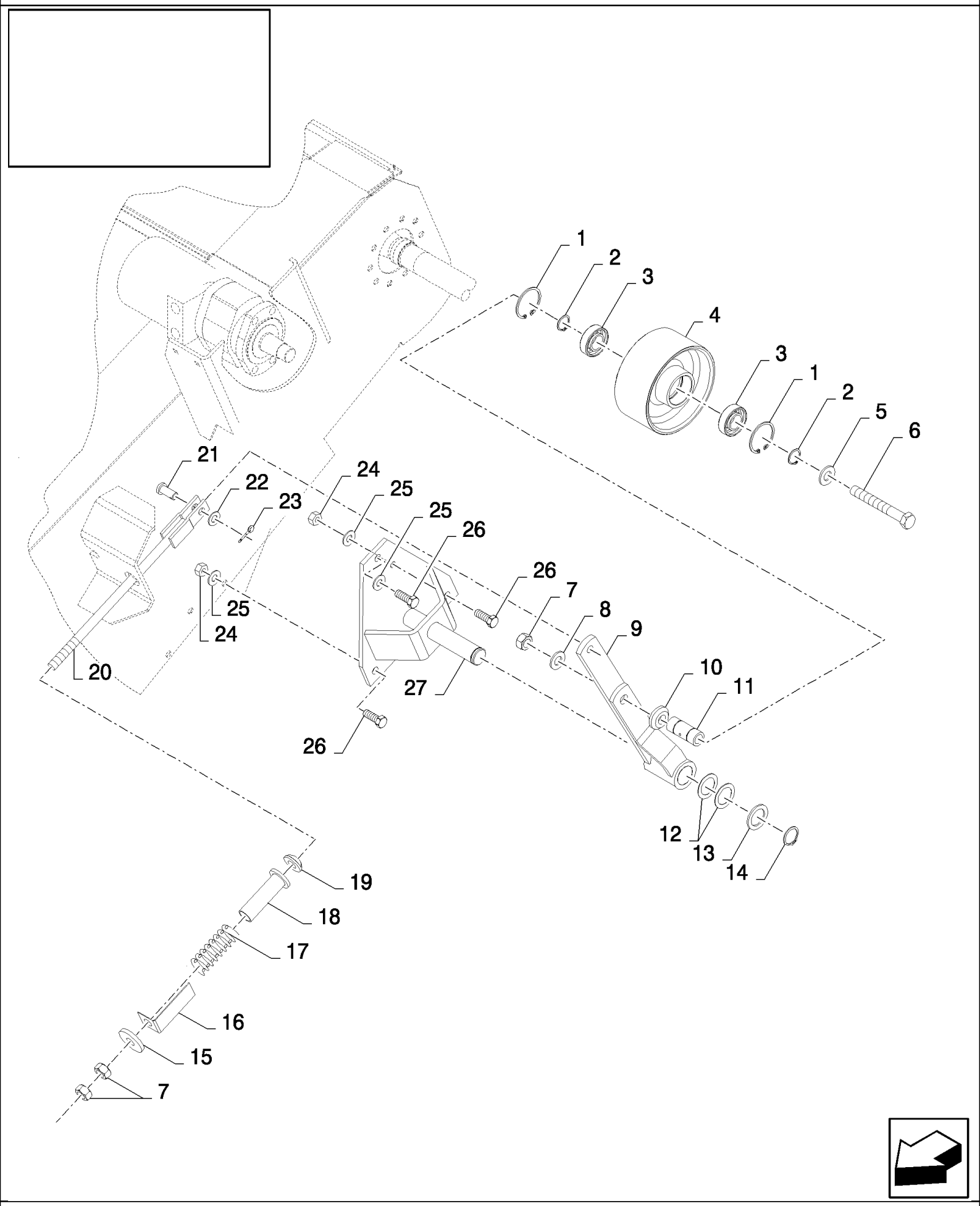

CS660 COMBINE BASE UNIT (1/03-) - Accessories

18.87338847(02) CORN DRIVE REBUILD KIT - 3HB

ссылка	Номер детали	Кол-во	Описание
1	370011	2	RING, SNAP, M52, Int,
2	370002	2	RING, SNAP, M25, Ext,
3	443898	2	BEARING, BALL,
4	84980775	1	WHEEL, IDLER,
5	378246	1	WASHER, 16MM
6	321246	1	BOLT, Hex, M16 x 120, 8.8,
7	100020	3	NUT, M16, Cl 8,
8	140048	1	WASHER, SPRING, Belleville, M16,
9	84980710	1	ARM, (28)
10	84980619	1	BUSHING,
11	84980609	1	BUSHING,
12	441176	2	WASHER, 31MM
13	84814901	1	WASHER,
14	370003	1	RING, SNAP, M30, Ext,
15	84005115	1	WASHER, 17MM
16	84981584	1	INDICATOR,
17	359641	1	SPRING,
18	84981585	1	TUBE,
19	450869	1	WASHER,
20	84981179	1	ROD,
21	412209	1	PIN, CLEVIS, M12 x 30,
22	140223	1	WASHER, 13MM
23	130004	1	PIN, SPLIT (COTTER), M3.2 x 25,
24	9706685	2	NUT, M12, Cl 8,
25	140046	3	WASHER, SPRING, Belleville, M12,
26	86629541	3	BOLT, Hex, M12 x 40, 8.8, Full Thd,
27	84980730	1	SUPPORT,
	86503661	0.05	Grease

18.87338847(03) CORN DRIVE REBUILD KIT - 3HB

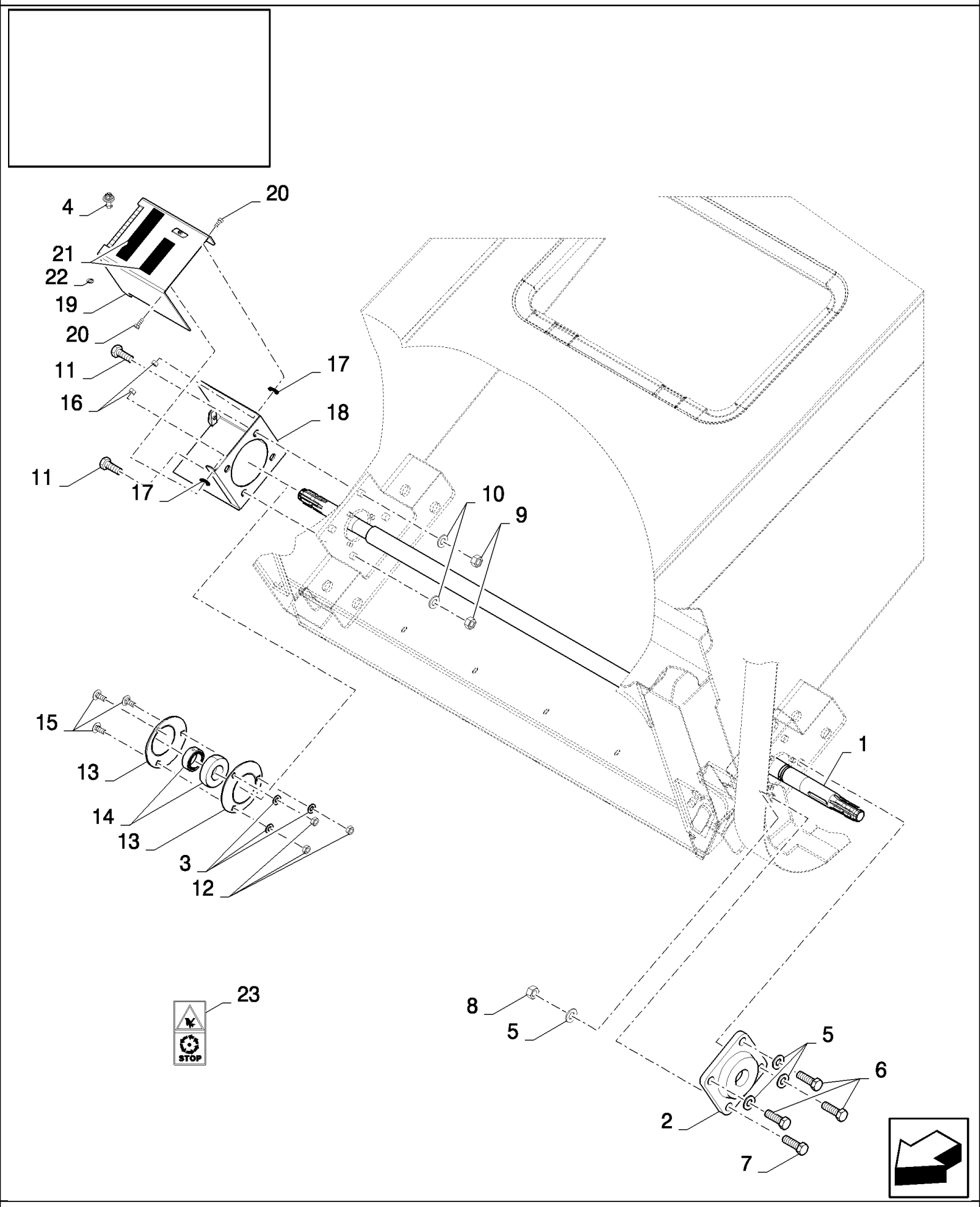

CS660 COMBINE BASE UNIT (1/03-) - Accessories

18.87338847(03) CORN DRIVE REBUILD KIT - 3HB

ссылка	Номер детали	Кол-во	Описание
1	84980405	1	SHAFT,
2	89814384	1	BEARING ASSY,
3	140045	3	WASHER, SPRING, Belleville, M10,
4	89514603	1	LOCK,
5	140048	4	WASHER, SPRING, Belleville, M16,
6	120090	3	BOLT, Hex, M16 x 50, 8.8,
7	120091	1	BOLT, Hex, M16 x 60, 8.8,
8	100020	1	NUT, M16, Cl 8,
9	9706685	4	NUT, M12, Cl 8,
10	140046	4	WASHER, SPRING, Belleville, M12,
11	9706687	4	BOLT, Hex, M12 x 30, 8.8,
12	100016	3	NUT, M10, Cl 8,
13	36403	2	FLANGE,
14	322360	1	BEARING, BALL,
15	338949	3	BOLT, CARRIAGE, Short NK, M10 x 25, Cl8.8, Full Thd,
16	412152	2	NUT, LOCK, M6 x 1, Cl 8.8,
17	140015	6	WASHER, 6MM
18	84981803	1	SHIELD,
19	84981804	1	SHIELD,
20	120100	2	BOLT, Hex, M6 x 20, 8.8,
21	401502	1	STRIP, ANTI-SKID, 51mm x 18.3 Roll - Cut to Size
22	9514605	1	RING, LOCKING,
23	84014117	1	DECAL,
	400972	0.05	
	86503661	0.05	Grease

18.87338847(04) CORN DRIVE REBUILD KIT - 3HB

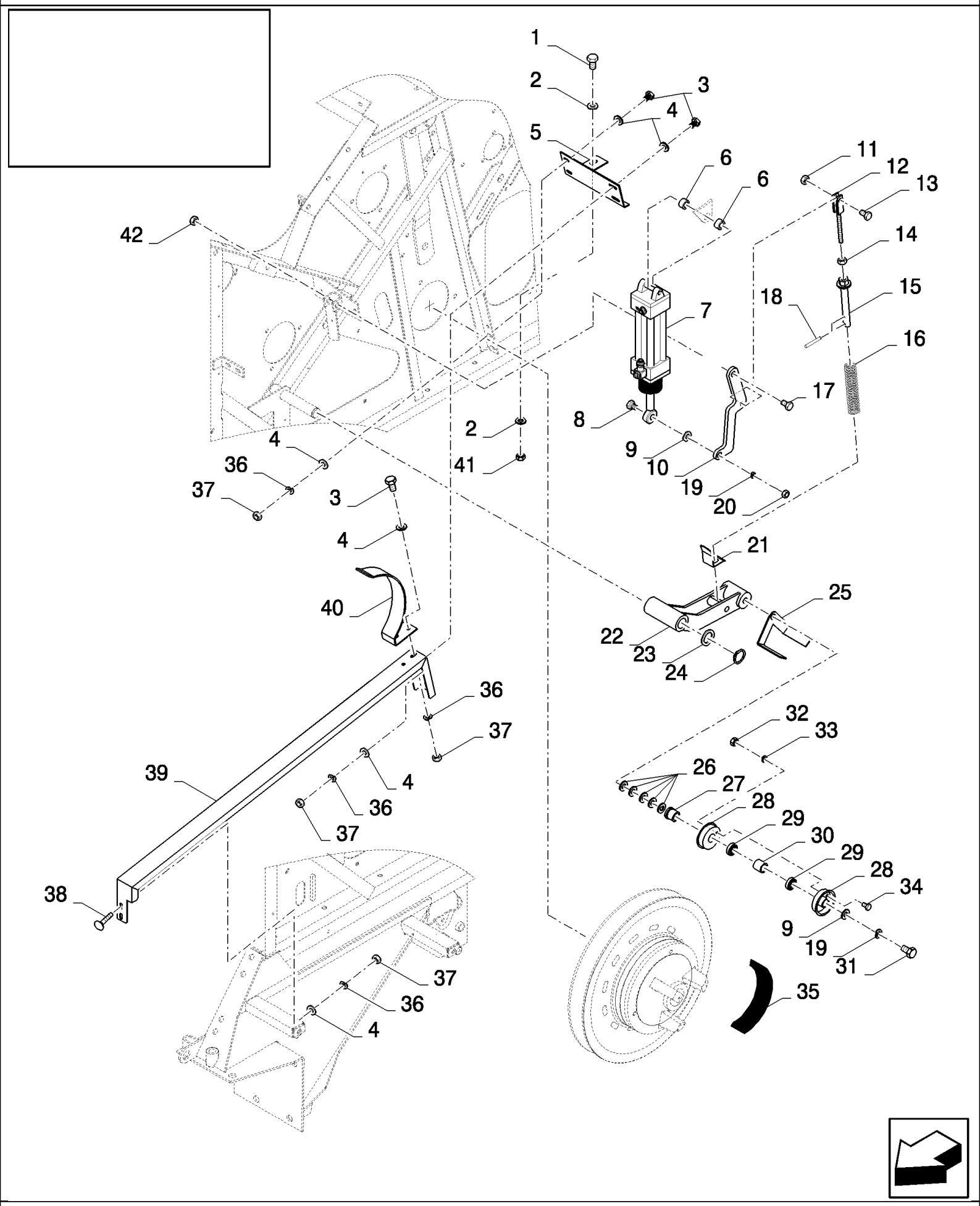

CS660 COMBINE BASE UNIT (1/03-) - Accessories

18.87338847(04) CORN DRIVE REBUILD KIT - 3HB

ссылка	Номер детали	Кол-во	Описание
1	43140	1	BOLT, Hex, M10 x 30, 8.8, Full Thd,
2	140045	2	WASHER, SPRING, Belleville, M10,
3	120104	6	BOLT, Hex, M8 x 20, 8.8,
4	378243	12	WASHER, M8,
5	84072926	1	SUPPORT,
6	84021736	2	SLEEVE,
7	84432515	1	CYLINDER,
8	120091	1	BOLT, Hex, M16 x 60, 8.8,
9	140093	2	WASHER, 17MM
10	84077727	1	LEVER,
11	100037	1	NUT, M10 x 1.5, Cl 8,
12	84072638	1	YOKE,
13	325829	1	BOLT, Hex, M10 x 45, 8.8, M10x45
14	9706685	AR	NUT, M12, Cl 8,
15	84446689	1	REGULATOR,
16	84446705	1	SPRING,
17	120092	1	BOLT, Hex, M16 x 70, 8.8,
18	300872	2	PIN, LOCK, M8 x 36, Slotted,
19	140048	2	WASHER, SPRING, Belleville, M16,
20	100020	1	NUT, M16, Cl 8,
21	84446619	1	INDICATOR,
22	84446614	1	LEVER,
23	140108	1	WASHER, 31MM
24	370003	1	RING, SNAP, M30, Ext,
25	84983455	1	PLATE,
26	140090	5	WASHER, 17MM
27	427248	1	BUSHING,
28	84441735	2	HALF-PULLEY,
29	443898	2	BEARING, BALL,
30	430235	1	BUSHING,
31	43874	1	BOLT, Hex, M16 x 110, 8.8,
32	15896221	3	NUT, M6, Cl 10,
33	322357	3	WASHER, SPRING, Belleville, M6,
34	86508568	3	BOLT, Hex, M6 x 16, 8.8,
35	89817374	1	BELT, TRANSMISSION,
36	322358	8	WASHER, SPRING, Belleville, M8,
37	89706690	8	NUT, M8, Cl 8,
38	86507486	2	BOLT, CARRIAGE, Short NK, M8 x 20, Cl8.8, Full Thd,
39	84072929	1	GUIDE,
40	84989940	1	GUIDE,
41	100016	1	NUT, M10, Cl 8,
42	86000441	1	NUT, LOCK, M16 x 2, Cl 8,
	86503661	0.02	Grease

CS660 COMBINE BASE UNIT (1/03-) - Accessories

18.87338847(05) CORN DRIVE REBUILD KIT - 3HB

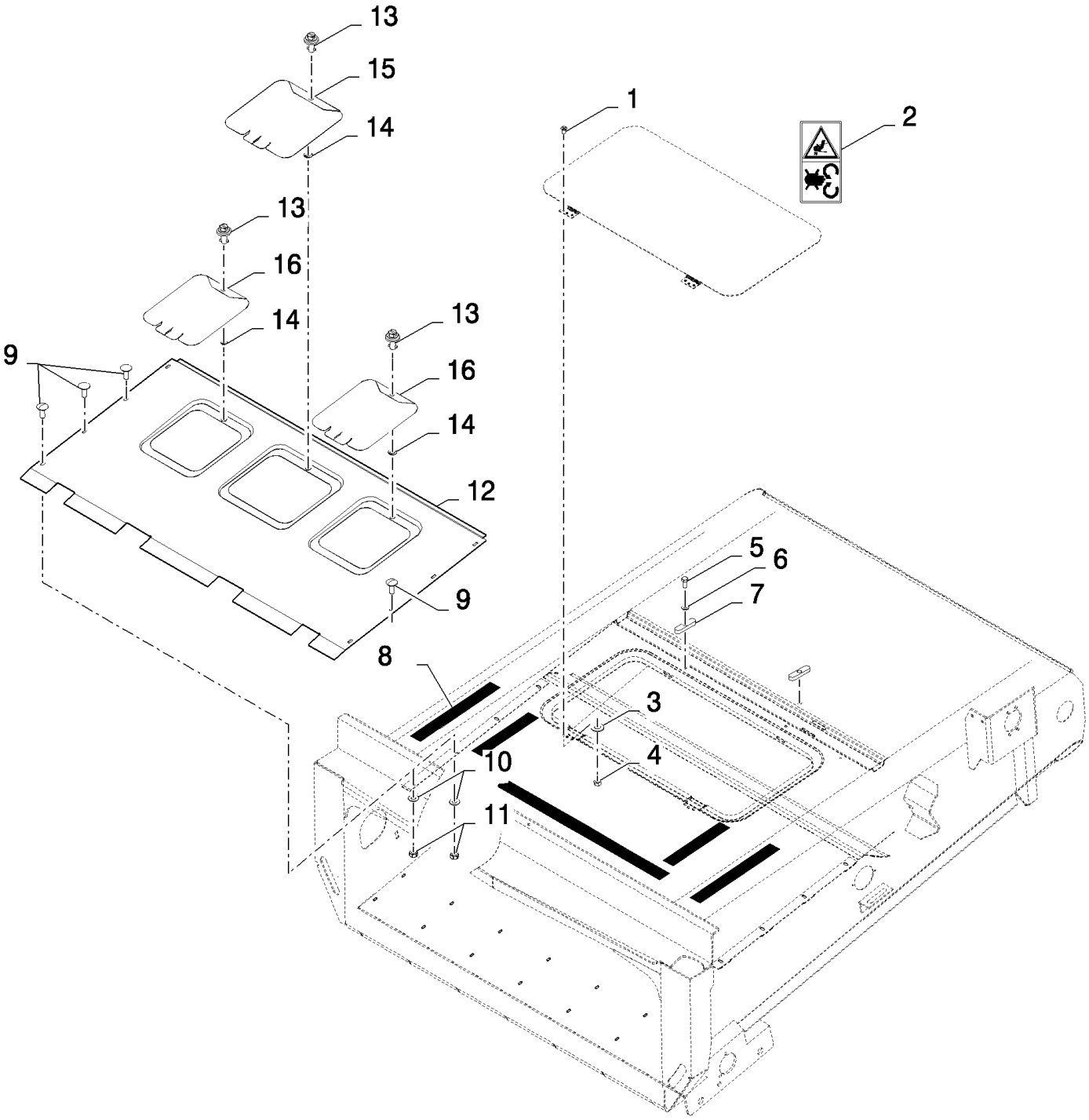

CS660 COMBINE BASE UNIT (1/03-) - Accessories

18.87338847(05) CORN DRIVE REBUILD KIT - 3HB

ссылка	Номер детали	Кол-во	Описание
1	120100	6	BOLT, Hex, M6 x 20, 8.8,
2	84004734	2	DECAL,
3	322357	6	WASHER, SPRING, Belleville, M6,
4	15896221	6	NUT, M6, Cl 10,
5	120104	2	BOLT, Hex, M8 x 20, 8.8,
6	378243	2	WASHER, M8,
7	84982331	2	CLIP,
8	401502	AR	STRIP, ANTI-SKID, L=1.97M
9	86507486	8	BOLT, CARRIAGE, Short NK, M8 x 20, Cl8.8, Full Thd,
10	9706690	8	NUT, M8, Cl 8,
11	322357	8	WASHER, SPRING, Belleville, M6,
12	84449007	1	PLATE,
13	9514603	3	LOCK,
14	9514605	3	RING, LOCKING,
15	84448919	1	COVER,
16	84448921	2	COVER,

ATTACHMENTS	**ACCESSOIRES**	**ACCESORIO**	**UDSTYR**
ACCESSORIO	**ZUBEHÖR**	**EQUIPAMENTOS**	**HULPSTUKKEN**

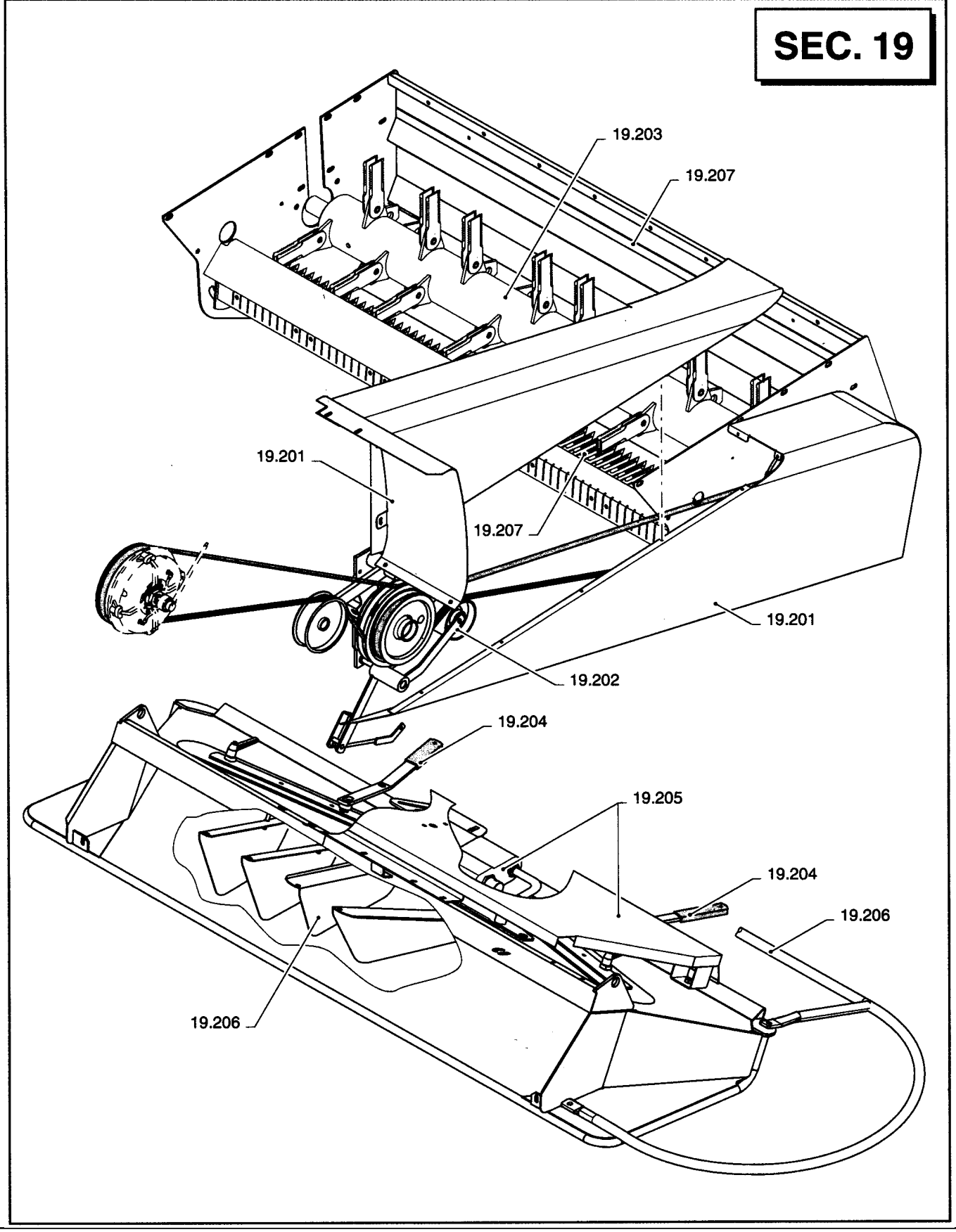

19.000(01) SECTION LIST 19

ссылка	Номер детали	Кол-во	Описание

ATTACHMENTS	**ACCESSOIRES**	**ACCESORIO**	**UDSTYR**
ACCESSORIO	**ZUBEHÖR**	**EQUIPAMENTOS**	**HULPSTUKKEN**

SEC. 19

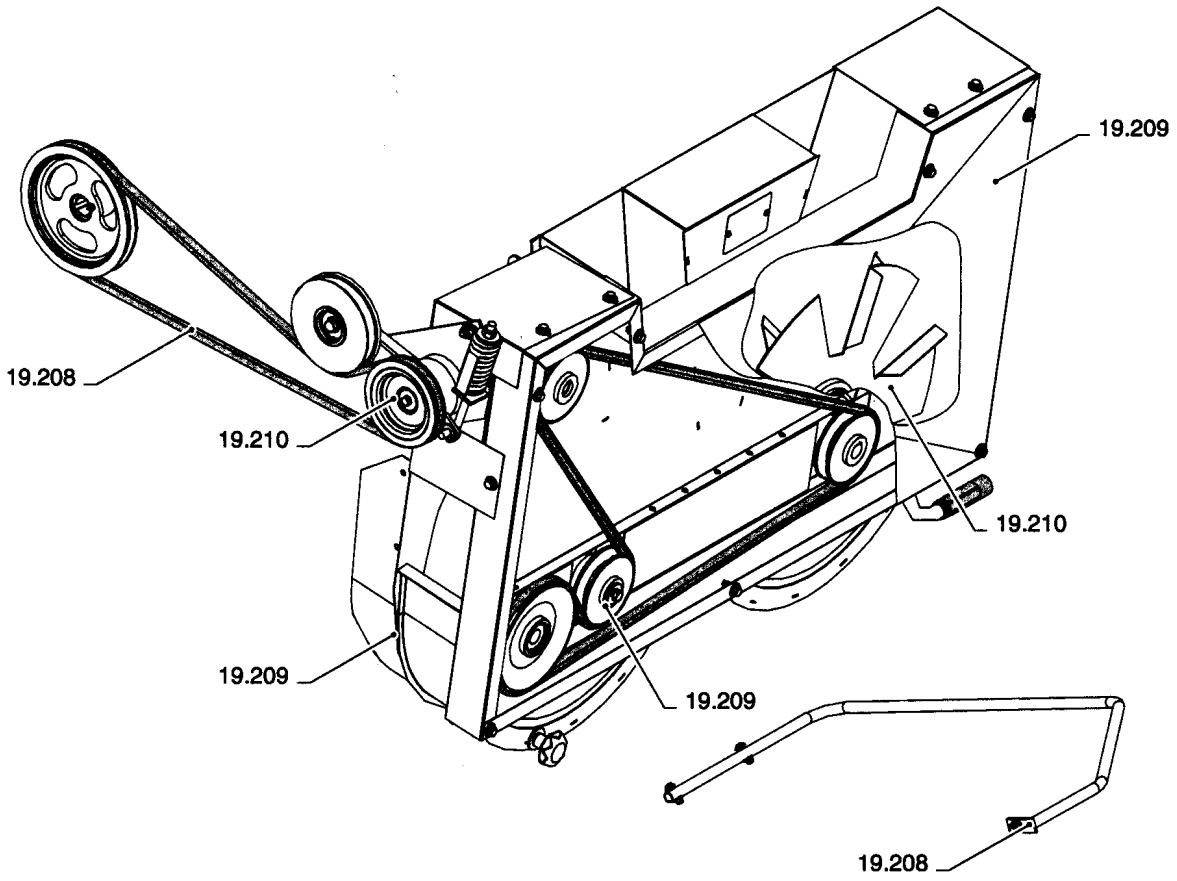

19.000(02) SECTION LIST 19

ссылка	Номер детали	Кол-во	Описание

19.201(01) CHOPPER DRIVE, SHIELDS

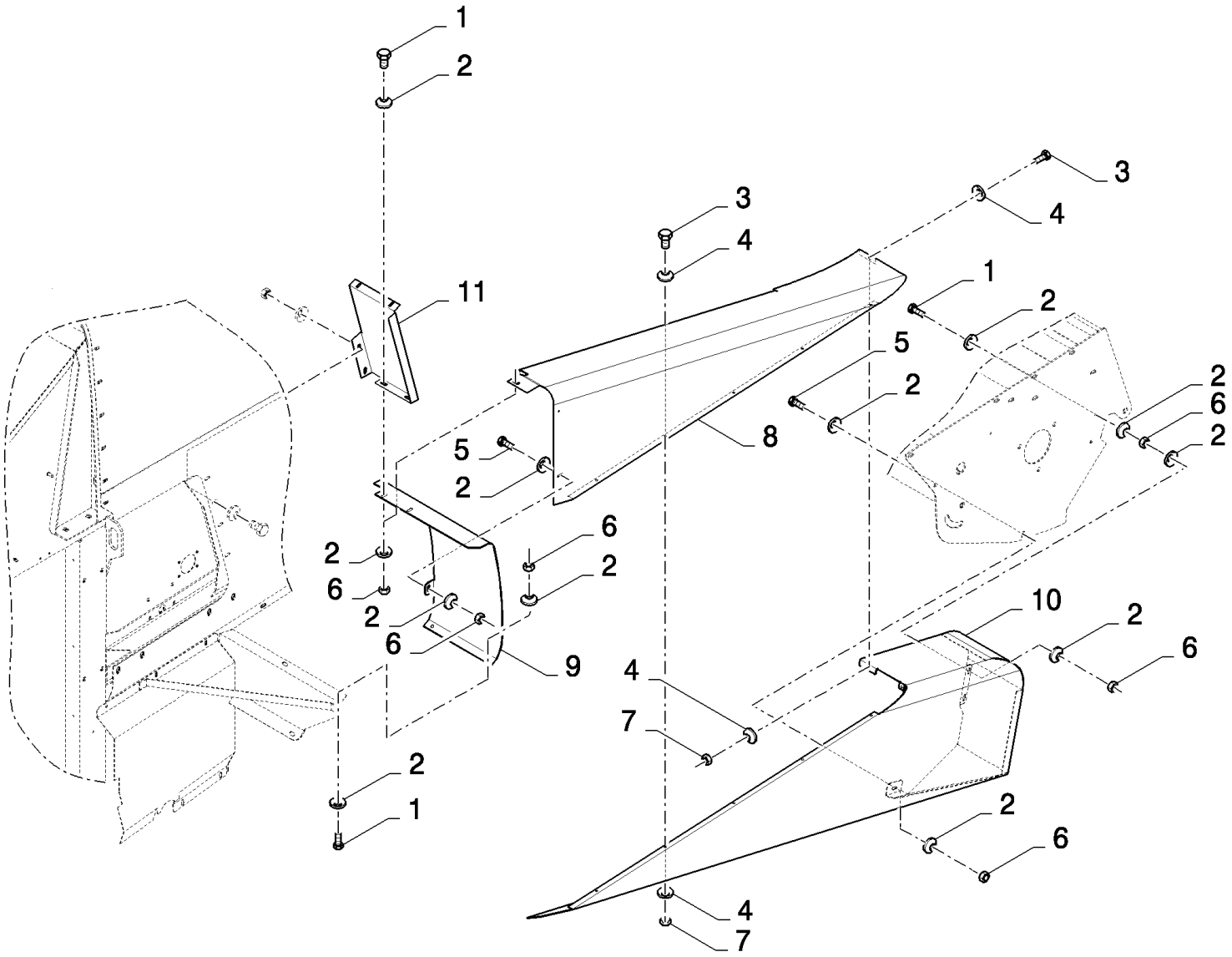

CS660 COMBINE BASE UNIT (1/03-) - Attachments

19.201(01) CHOPPER DRIVE, SHIELDS

ссылка	Номер детали	Кол-во	Описание
1	43127	6	BOLT, Hex, M8 x 25, 8.8,
2	412650	20	WASHER, SPRING, Belleville, M8,
3	86508568	7	BOLT, Hex, M6 x 16, 8.8,
4	322357	14	WASHER, SPRING, Belleville, M6,
5	120104	2	BOLT, Hex, M8 x 20, 8.8,
6	89706690	10	NUT, M8, Cl 8,
7	15896221	7	NUT, M6, Cl 10,
8	84433958	1	SHIELD,
9	84442707	1	SHIELD,
10	84434189	1	SHIELD,
11	84446646	1	PLATE, , BSN C407
11	84457885	1	PLATE, , ASN D408

19.202(01) CHOPPER DRIVE

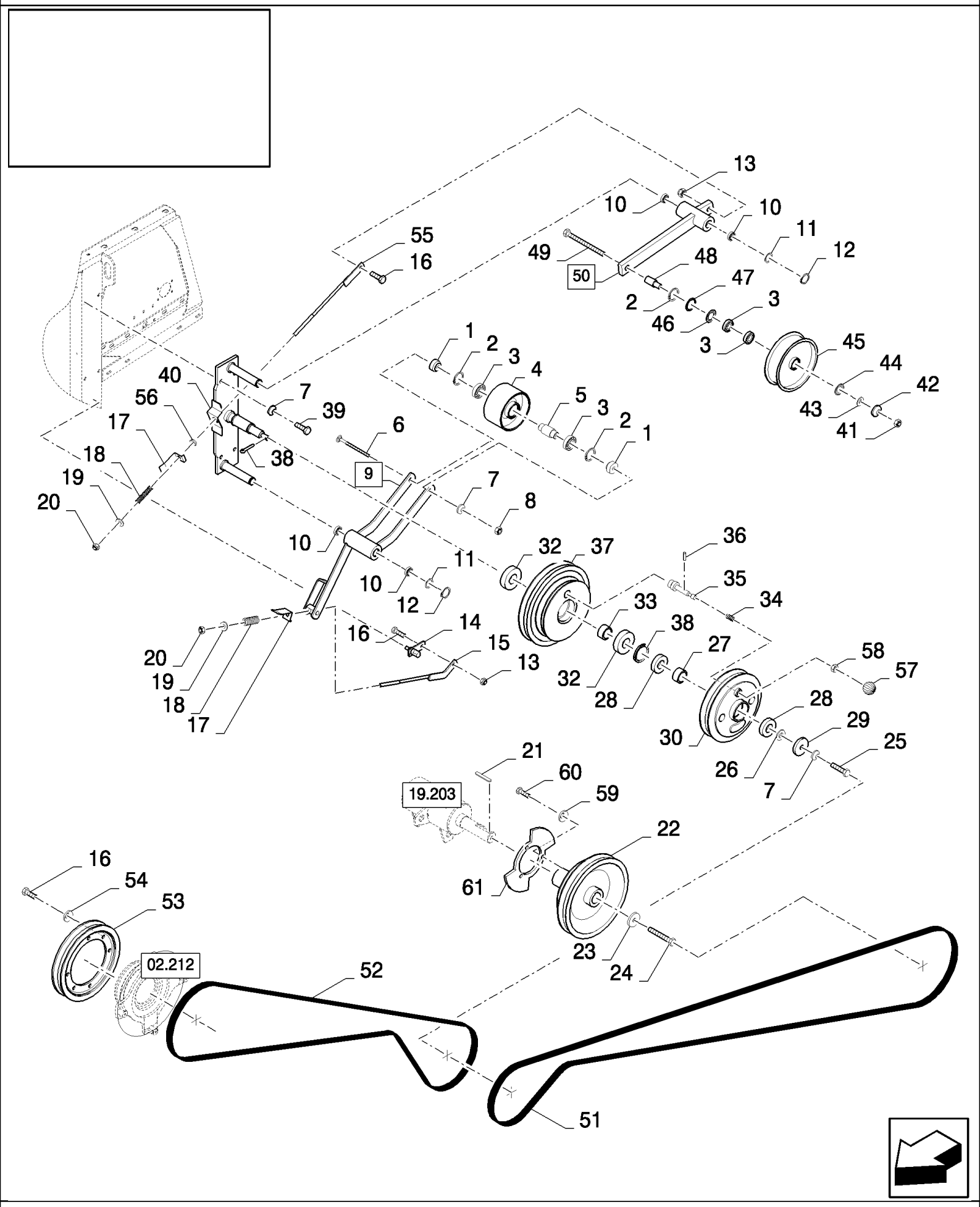

CS660 COMBINE BASE UNIT (1/03-) - Attachments

19.202(01) CHOPPER DRIVE

ссылка	Номер детали	Кол-во	Описание
1	84076275	2	BUSHING,
2	370011	3	RING, SNAP, {PP:80370011} M52, Int,
3	443898	4	BEARING, BALL, {PP:80443898}
4	84334348	1	PULLEY,
5	84076197	1	BUSHING,
6	84053391	1	BOLT, CARRIAGE, Short NK, M12 x 130, Cl8.8,
7	140046	6	WASHER, SPRING, Belleville, M12,
8	9706685	1	NUT, M12, Cl 8,
9	84076317	1	LEVER, (10)
10	420434	4	BUSHING, {PP:80420434}
11	84000011	2	WASHER, 30MM
12	370003	2	RING, SNAP, {PP:80370003} M30, Ext,
13	100037	2	NUT, M10 x 1.5, Cl 8,
14	84431514	1	HINGE,
15	84431503	1	ROD,
16	43139	8	SCREW, {PP:80043139} M10x25
17	84431388	2	INDICATOR,
18	84814910	2	SPRING,
19	378245	2	WASHER, M12,
20	412126	2	NUT, LOCK, M12 x 1.75, Cl 8,
21	412341	1	KEY, {PP:80412341}
22	84441435	1	PULLEY,
23	440997	1	WASHER, {PP:80440997} 17MM
24	43168	1	BOLT, Hex, M16 x 40, 8.8,
25	9706687	1	BOLT, {PP:89706687} Hex, M12 x 30, 8.8, M16x1.5
26	327084	1	WASHER, {PP:80327084}
27	84441521	2	RING,
28	913716	2	BEARING, BALL, {PP:80913716}
29	84441824	1	RING,
30	84444470	1	PULLEY, , BSN C383
30	84453029	1	PULLEY, , ASN D384
31	370006	1	RING, SNAP, {PP:80370006}
32	210086	2	BEARING ASSY, {PP:80210086}
33	84441520	1	BUSHING,
34	26538	1	SPRING, {PP:80026538}
35	84076198	1	PIN, , BSN C375
35	84444511	1	PIN, , ASN D376
36	14164370	1	PIN, LOCK, M4 x 30, Slotted,
37	84441441	1	PULLEY,
38	84441806	1	RING,
39	300389	4	BOLT, Hex, M12 x 35, 8.8, Full Thd,
40	84441790	1	SUPPORT,
41	100020	1	NUT, M16, Cl 8,
42	140048	1	WASHER, SPRING, Belleville, M16,
43	84440599	1	WASHER,

19.202(01) CHOPPER DRIVE

ссылка	Номер детали	Кол-во	Описание
44	80390515	1	RING,
45	84440508	1	WHEEL, IDLER,
46	391120	1	ELEMENT, SEALING, {PP:80391120}
47	84991773	1	RING,
48	84440601	1	BUSHING,
49	321246	1	BOLT, Hex, M16 x 120, 8.8,
50	84076270	1	LEVER, (10)
51	84076421	1	BELT, TRANSMISSION,
52	84075955	1	BELT, TRANSMISSION,
53	84980735	1	PULLEY,
54	140045	6	WASHER, SPRING, Belleville, M10,
55	84431940	1	ROD,
56	439857	1	BUSHING, {PP:80439857}
57	84453022	1	BUTTON, , ASN D376
58	89706690	1	NUT, M8, Cl 8, , ASN D376
58	100016	1	NUT, M10, Cl 8, , FOR CL560 ONLY
59	322357	3	WASHER, SPRING, Belleville, M6,
60	120100	3	BOLT, Hex, M6 x 20, 8.8,
61	84444721	1	RING,

19.203(01) CHOPPER, ROTOR

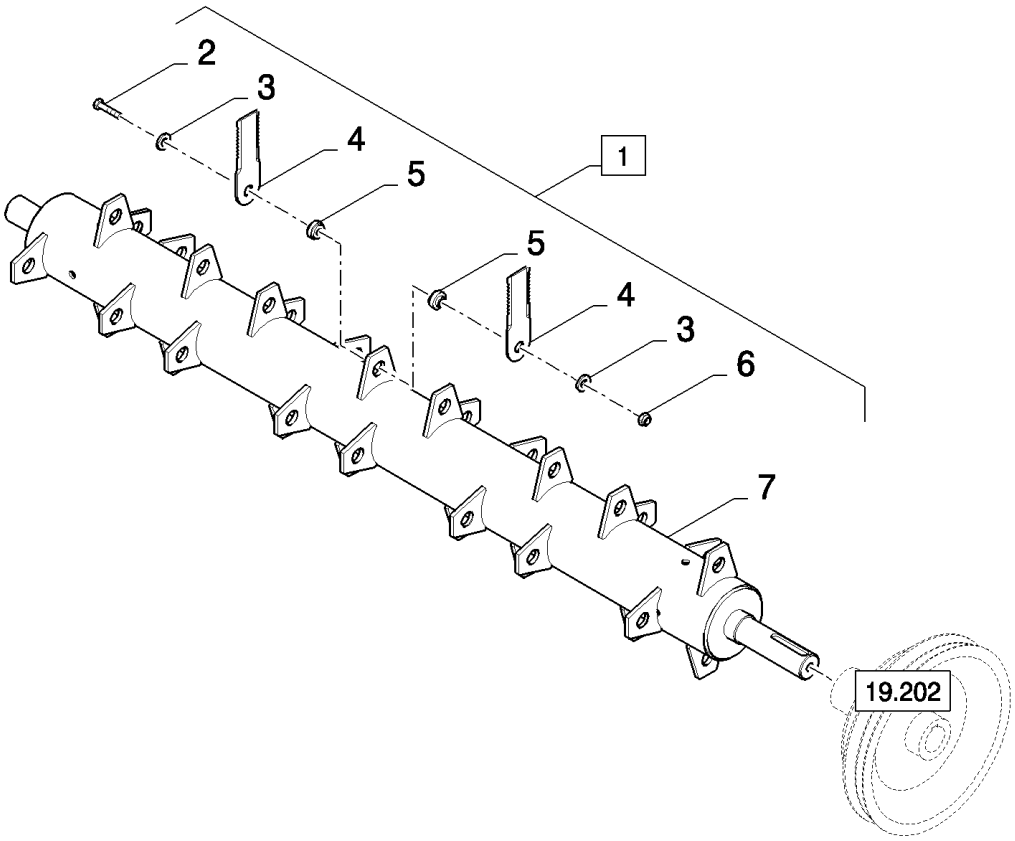

19.203(01) CHOPPER, ROTOR

ссылка	Номер детали	Кол-во	Описание
1	84079093	1	ROTOR, , FOR CL560 ONLY, FOR CS520, CS540 ONLY
1	84079088	1	ROTOR, , FOR CS640, CS660 ONLY
2	43249	AR	BOLT, {PP:80043249} Hex, M10 x 50, 10.9, M10x50
2	84442180	AR	BOLT, Hex, M10 x 1.25 x 50, 8.8, M10x50
3	84440413	AR	WASHER,
4	84065059	52	KNIFE, , FOR CS520, CS540 ONLY, FOR CL560 ONLY
4	84065059	64	KNIFE, , FOR CS640, CS660 ONLY
5	84433270	52	BUSHING, , FOR CS520, CS540 ONLY, FOR CL560 ONLY
5	84433270	64	BUSHING, , FOR CS640, CS660 ONLY
6	86512554	AR	NUT, LOCK, M10 x 1.5, Cl 10, M10
6	84442175	AR	NUT, M10 x 1.25, Cl 10, M10
7	NSS	1	NOT SERVICED SEPARATELY,

19.204(01) MANUAL ADJUSTABLE DEFLECTORS

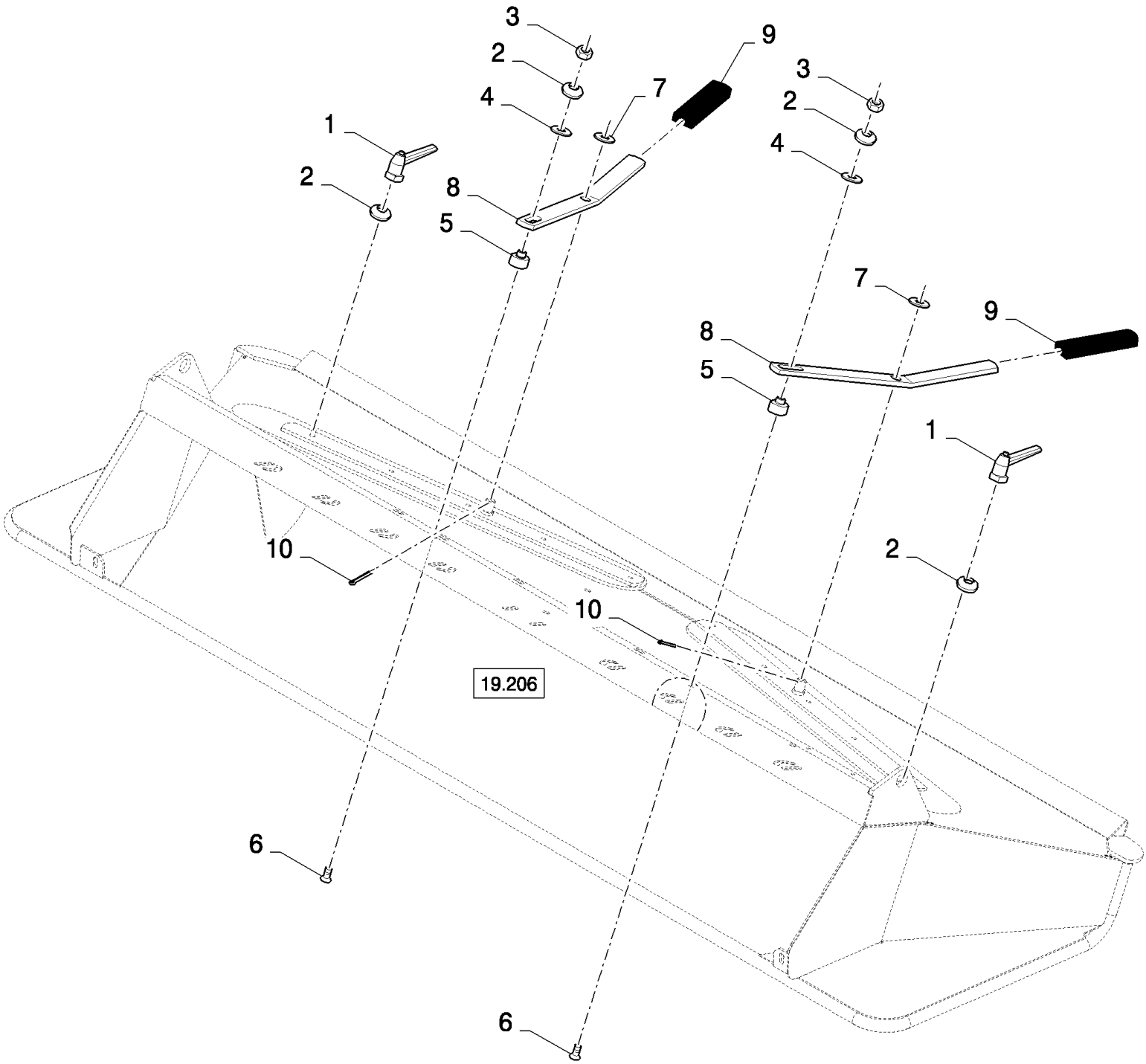

CS660 COMBINE BASE UNIT (1/03-) - Attachments

19.204(01) MANUAL ADJUSTABLE DEFLECTORS

ссылка	Номер детали	Кол-во	Описание
1	84435462	2	HANDLE,
2	322358	4	WASHER, SPRING, Belleville, M8,
3	89706690	2	NUT, M8, Cl 8,
4	140041	2	WASHER, M8 x 28 x 3,
5	84434297	2	BUSHING,
6	84069530	2	SCREW, Hex Soc Flat Hd, M8 x 40, 8.8,
7	378246	2	WASHER, {PP:80378246} 16MM
8	84435478	2	LEVER,
9	84439164	2	HANDLE GRIP,
10	130004	2	PIN, SPLIT (COTTER), {PP:80130004} M3.2 x 25,

19.205(01) SPREADER HOOD, REMOTE CONTROL

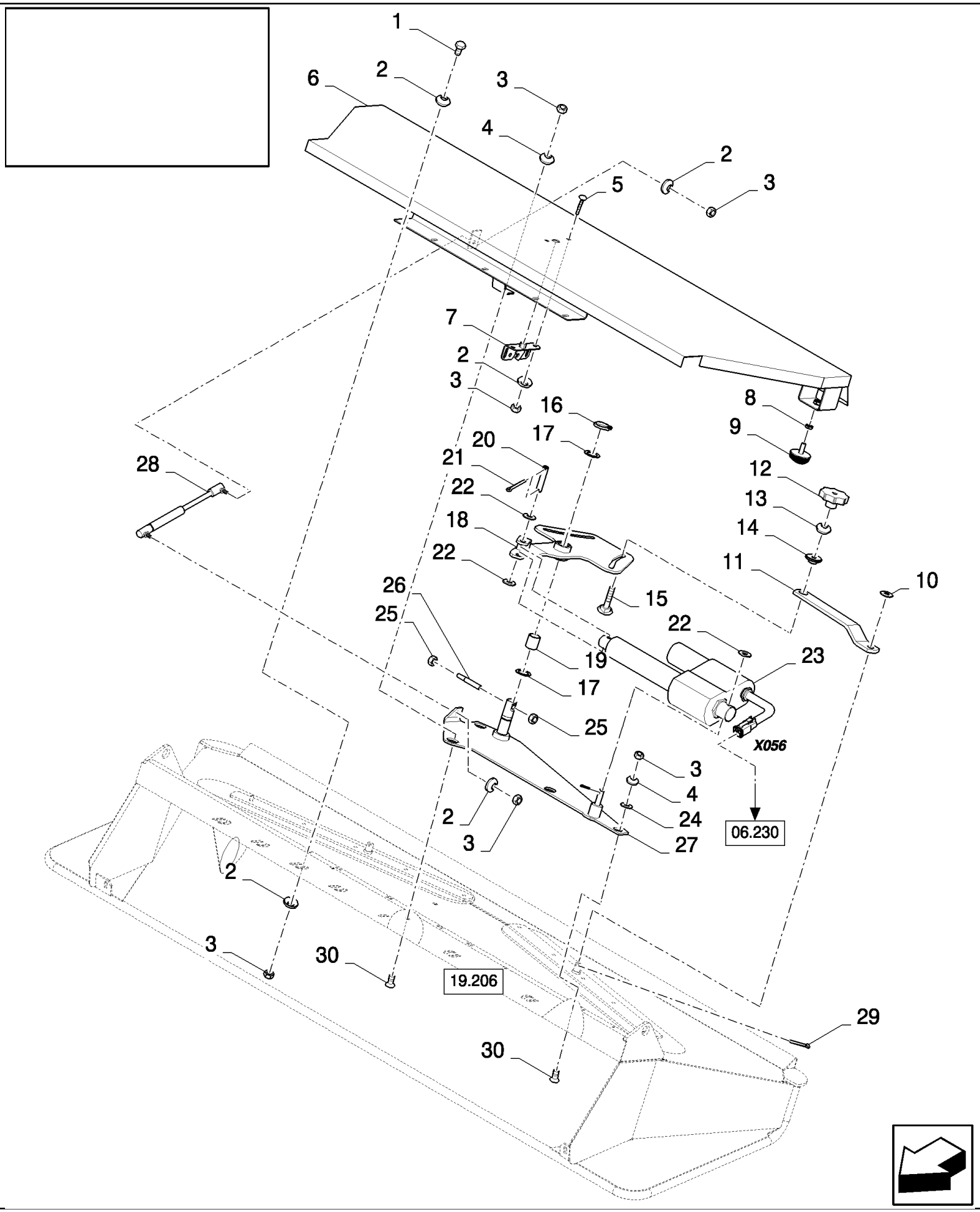

19.205(01) SPREADER HOOD, REMOTE CONTROL

ссылка	Номер детали	Кол-во	Описание
1	120104	5	BOLT, Hex, M8 x 20, 8.8,
2	322358	14	WASHER, SPRING, Belleville, M8,
3	89706690	12	NUT, M8, Cl 8,
4	412650	3	WASHER, SPRING, Belleville, M8,
5	86507486	2	BOLT, CARRIAGE, Short NK, M8 x 20, Cl8.8, Full Thd,
6	84435678	1	COVER,
7	84015292	1	LOCK,
8	84807411	2	NUT, Thin, M10 x 1.5, Cl 04,
9	190029	2	INSULATOR BLOCK, {PP:80190029}
10	378246	2	WASHER, {PP:80378246} 16MM
11	84435480	2	LINKAGE,
12	84440562	2	KNOB,
13	140045	2	WASHER, SPRING, Belleville, M10,
14	84435513	2	BUSHING,
15	350459	2	BOLT, CARRIAGE, Short NK, M10 x 50, Cl8.8, Full Thd,
16	370002	1	RING, SNAP, {PP:80370002} M25, Ext,
17	140103	2	WASHER, {PP:80140103} 26MM
18	84435495	1	LEVER,
19	80395589	1	SLEEVE,
20	84017216	1	PIN,
21	130003	3	PIN, SPLIT (COTTER), {PP:80130003} M3.2 x 20,
22	378245	3	WASHER, M12,
23	84018921	1	ACTUATOR, , SEE FIGURE 06.701
24	554195	2	WASHER, {PP:80554195} 9MM
25	100016	2	NUT, M10, Cl 8,
26	84018597	1	ROD, THREADED,
27	84435645	1	SUPPORT,
28	89994348	1	GAS STRUT,
29	130004	2	PIN, SPLIT (COTTER), {PP:80130004} M3.2 x 25,
30	412495	3	SCREW, {PP:80412495} Hex Soc Flat Hd, M8 x 20, 8.8, M8x20

19.206(01) SPREADER HOOD

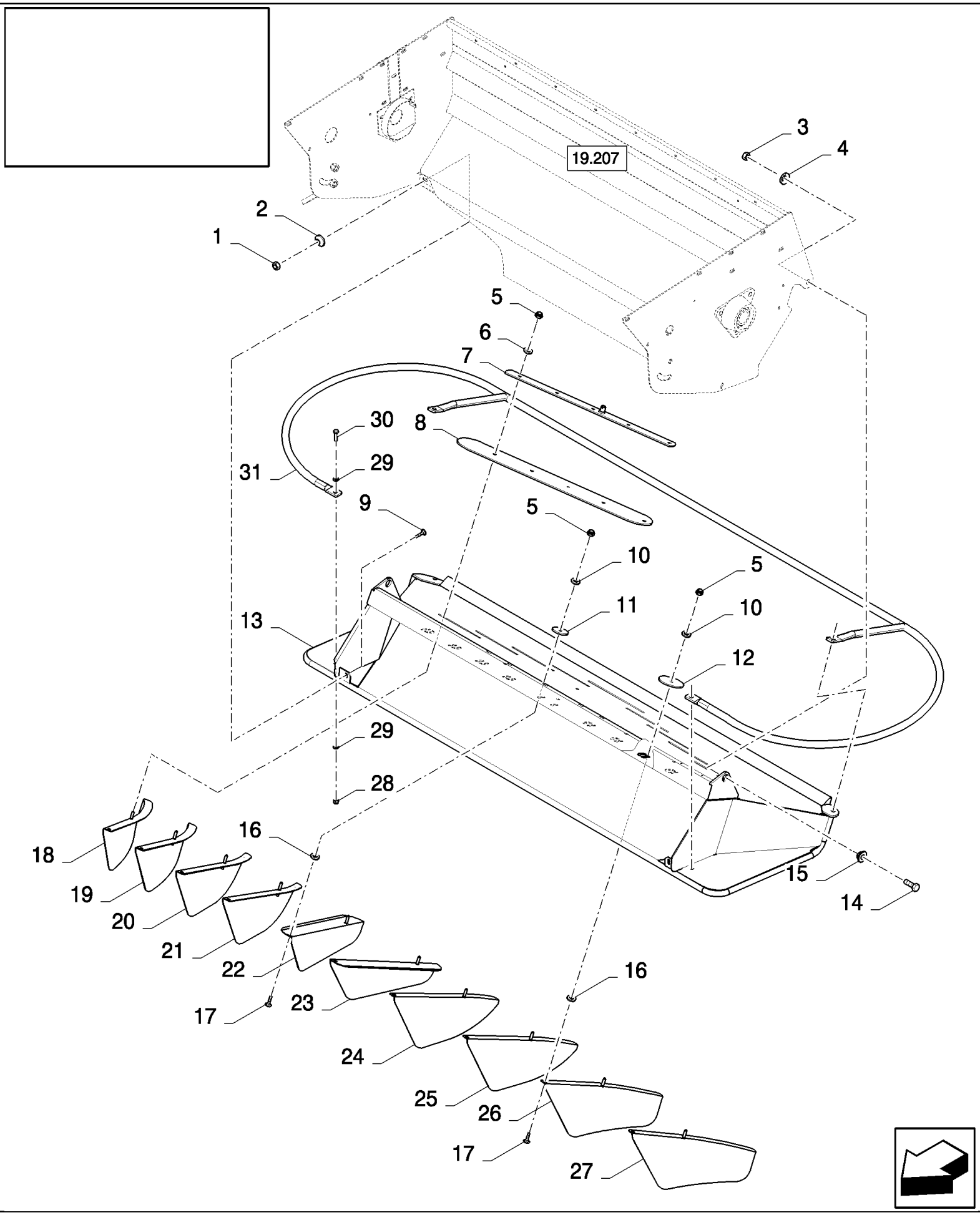

19.206(01) SPREADER HOOD

ссылка	Номер детали	Кол-во	Описание
1	89706690	2	NUT, M8, Cl 8,
2	412650	2	WASHER, SPRING, Belleville, M8,
3	100020	2	NUT, M16, Cl 8,
4	140048	2	WASHER, SPRING, Belleville, M16,
5	86629542	AR	NUT, LOCK, M8 x 1.25, Cl 8,
6	140016	AR	WASHER, M8 x 16 x 1.6,
7	84435694	2	PAD, SLIDING, , FOR CS520, CS540 ONLY, FOR CL560 ONLY
7	84435482	2	PAD, SLIDING, , FOR CS640, CS660 ONLY
8	84435622	2	PAD, SLIDING, , FOR CS520, CS540 ONLY, FOR CL560 ONLY
8	84065131	2	PAD, SLIDING, , FOR CS640, CS660 ONLY
9	86507486	2	BOLT, CARRIAGE, Short NK, M8 x 20, Cl8.8, Full Thd,
10	140041	AR	WASHER, M8 x 28 x 3,
11	84435270	2	WASHER,
12	84435269	AR	WASHER,
13	84434275	1	FRAME, , FOR CS520, CS540 ONLY, FOR CL560 ONLY
13	84434285	1	FRAME, , FOR CS640, CS660 ONLY
14	120090	2	BOLT, Hex, M16 x 50, 8.8,
15	84435443	2	BUSHING,
16	747812	AR	WASHER, {PP:80747812} 15MM
17	308761	AR	BOLT, CARRIAGE, Short NK, M8 x 25, Cl8.8, Full Thd,
18	84434299	1	DEFLECTOR, , FOR CS640, CS660 ONLY, BSN C383
18	84454358	1	DEFLECTOR, , FOR CS640, CS660 ONLY, ASN D384
19	84434300	1	DEFLECTOR, , BSN C383
19	84454361	1	DEFLECTOR, , ASN D384
20	84439412	1	DEFLECTOR, , BSN C383
20	84454363	1	DEFLECTOR, , ASN D384
21	84439411	1	DEFLECTOR, , BSN C383
21	84454365	1	DEFLECTOR, , ASN D384
22	84435316	1	DEFLECTOR,
23	84435322	1	DEFLECTOR,
24	84439404	1	DEFLECTOR, , BSN C383
24	84454366	1	DEFLECTOR, , ASN D384
25	84439406	1	DEFLECTOR, , BSN C383
25	84454367	1	DEFLECTOR, , ASN D384
26	84434309	1	DEFLECTOR, , BSN C383
26	84454369	1	DEFLECTOR, , ASN D384
27	84434310	1	DEFLECTOR, , FOR CS640, CS660 ONLY, BSN C383
27	84454370	1	DEFLECTOR, , FOR CS640, CS660 ONLY, ASN D384
28	84430190	4	NUT, M8, FOR CL560 ONLY
29	84430178	8	WASHER, 8MM, FOR CL560 ONLY
30	84430189	4	SCREW, M8x30, FOR CL560 ONLY
31	84430187	1	PROTECTION, , FOR CL560 ONLY

19.207(01) CHOPPER, ROTOR FRAME

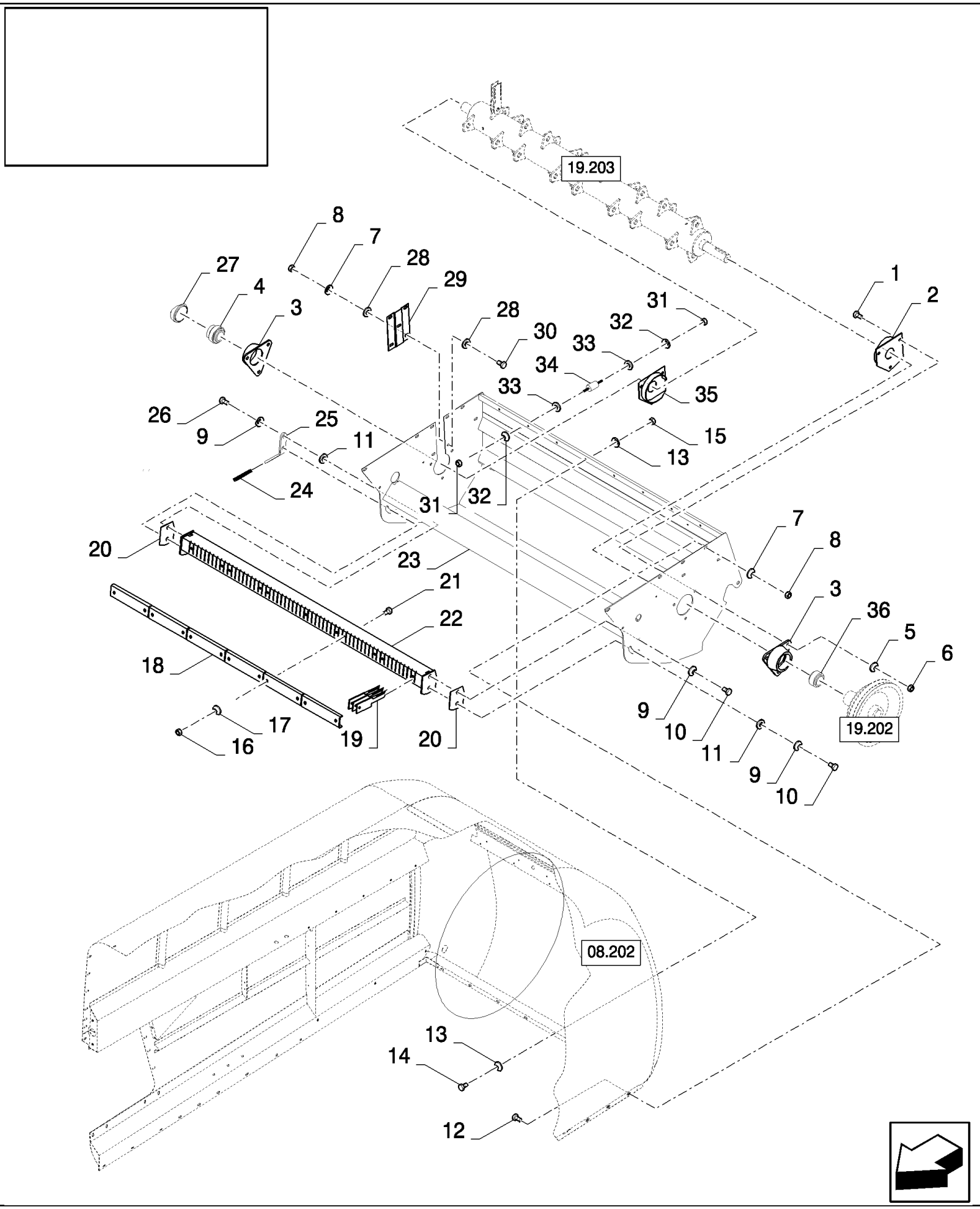

CS660 COMBINE BASE UNIT (1/03-) - Attachments

19.207(01) CHOPPER, ROTOR FRAME

ссылка	Номер детали	Кол-во	Описание
1	300389	6	BOLT, Hex, M12 x 35, 8.8, Full Thd,
2	84434806	1	GUARD,
3	84334208	2	HOUSING, BEARING,
4	385424	2	BEARING ASSY, {PP:80385424}
5	140046	6	WASHER, SPRING, Belleville, M12,
6	9706685	6	NUT, M12, Cl 8,
7	140045	9	WASHER, SPRING, Belleville, M10,
8	100016	9	NUT, M10, Cl 8,
9	140048	4	WASHER, SPRING, Belleville, M16,
10	43167	2	BOLT, Hex, M16 x 30, 8.8, Full Thd,
11	140020	3	WASHER, M16 x 30 x 3,
12	338949	7	BOLT, CARRIAGE, Short NK, M10 x 25, Cl8.8, Full Thd,
13	322358	AR	WASHER, SPRING, Belleville, M8,
14	120104	AR	BOLT, Hex, M8 x 20, 8.8,
15	89706690	AR	NUT, M8, Cl 8,
16	86629542	AR	NUT, LOCK, M8 x 1.25, Cl 8,
17	140041	AR	WASHER, M8 x 28 x 3,
18	84434026	5	RETAINER, , FOR CS520, CS540 ONLY, FOR CL560 ONLY
18	84434026	6	RETAINER, , FOR CS640, CS660 ONLY
19	9516450	50	KNIFE, {PP:89516450} , FOR CS520, CS540 ONLY, FOR CL560 ONLY
19	9516450	60	KNIFE, {PP:89516450} , FOR CS640, CS660 ONLY
20	84434200	AR	SHIM,
21	86528166	AR	BOLT, Hex, M8 x 120, 8.8, M8x120
22	84440055	1	SUPPORT, , FOR CS520, CS540 ONLY, FOR CL560 ONLY
22	84440064	1	SUPPORT, , FOR CS640, CS660 ONLY
23	84434061	1	FRAME, , FOR CS520, CS540 ONLY, FOR CL560 ONLY, BSN C487
23	87373173	1	FRAME, , FOR CL560 ONLY, FOR CS520, CS540 ONLY, ASN D488
23	84434060	1	FRAME, , FOR CS640, CS660 ONLY, BSN C487
23	87373172	1	FRAME, , FOR CS640, CS660 ONLY, ASN D488
24	84439164	1	HANDLE GRIP,
25	84434209	1	LEVER,
26	43168	2	BOLT, Hex, M16 x 40, 8.8,
27	137395	1	DUST CAP,
28	140042	4	WASHER, M10 x 34 x 3,
29	84440375	1	PLATE,
30	43139	2	SCREW, M10x25
31	15896221	4	NUT, M6, Cl 10,
32	322357	4	WASHER, SPRING, Belleville, M6,
33	448516	4	SPACER,
34	9513734	4	ISOLATOR,
35	84434825	1	GUARD,
36	385424	1	BEARING ASSY, , BSN C375
36	84453848	2	BEARING, BALL, , ASN D376

19.208(01) CHAFF SPREADER

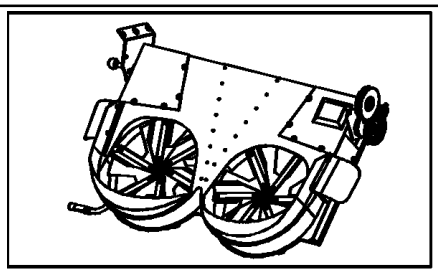

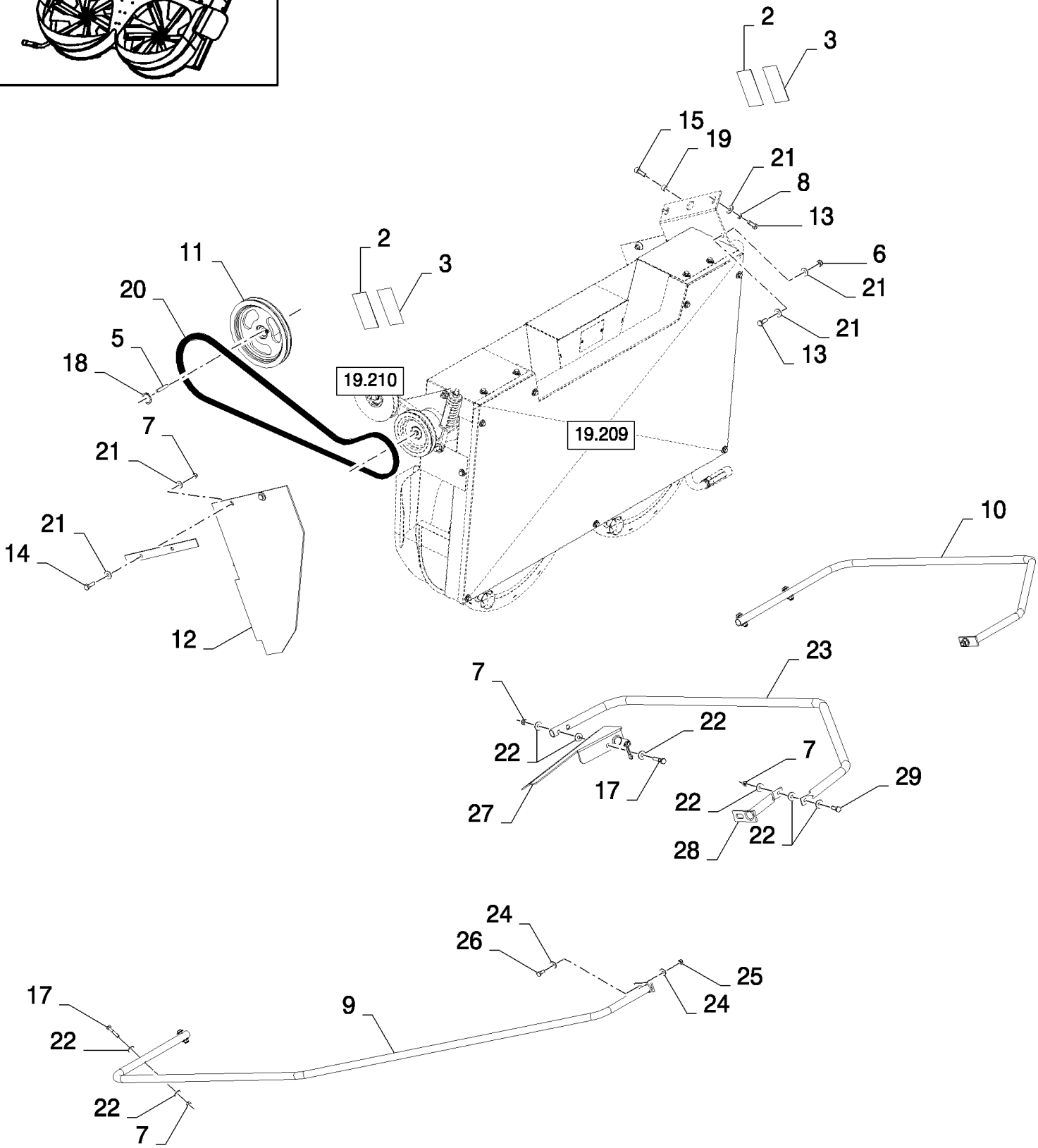

19.208(01) CHAFF SPREADER

ссылка	Номер детали	Кол-во	Описание
1	84800261	2	BRACKET,
2	84056170	2	DECAL,
3	84014117	2	DECAL,
4	84800262	1	HOUSING,
5	170010	1	KEY, {PP:80170010} M10
6	100037	8	NUT, {PP:80100037} M10 x 1.5, Cl 8, 8M
7	86629542	AR	NUT, LOCK, M8 x 1.25, Cl 8, 10.2MM
8	140045	2	WASHER, SPRING, {PP:80140045} Belleville, M10,
9	84800263	1	PIPE,
10	84800264	1	PIPE, , FOR CS520, CS540 ONLY
11	84800265	1	PULLEY,
12	84800266	2	SHIELD,
13	43139	6	SCREW, {PP:80043139} M10x25
14	43140	4	BOLT, Hex, M10 x 30, 8.8, Full Thd,
15	300442	1	SCREW, Hex Soc Hd, M10 x 30, 8.8,
16	120104	2	BOLT, Hex, M8 x 20, 8.8, , FOR CS640, CS660 ONLY
17	43129	AR	BOLT, Hex, M8 x 40, 8.8,
18	370003	1	RING, SNAP, {PP:80370003} M30, Ext,
19	84800267	1	SPACER,
20	84790244	1	BELT, TRANSMISSION,
21	378244	18	WASHER, M10,
22	307789	AR	WASHER, {PP:80307789} 8.4MM
23	84800268	1	PIPE, , FOR CS640, CS660 ONLY
24	140223	4	WASHER, {PP:80140223}
25	100038	2	NUT, LOCK, {PP:80100038} M12 x 1.75, Cl 8,
26	300388	2	BOLT, Hex, M12 x 25, 8.8,
27	84800269	1	BRACKET, , FOR CS640, CS660 ONLY
28	84800270	1	PIPE, , FOR CS640, CS660 ONLY
29	43127	1	BOLT, Hex, M8 x 25, 8.8, , FOR CS640, CS660 ONLY

19.209(01) CHAFF SPREADER

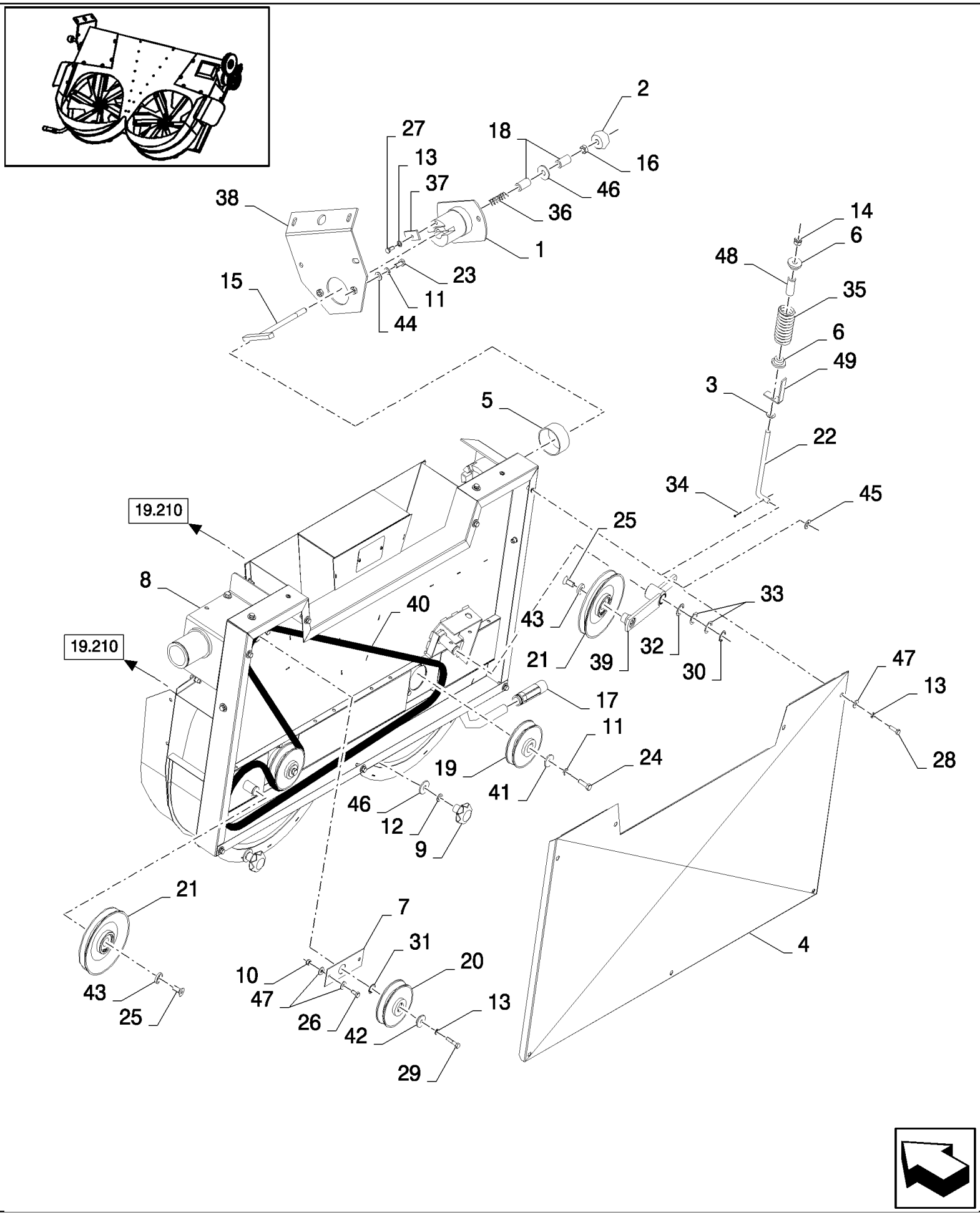

19.209(01) CHAFF SPREADER

ссылка	Номер детали	Кол-во	Описание
1	84800233	1	SECTOR, TOOTHED,
2	84074787	1	KNOB,
3	84043655	1	WASHER,
4	84800235	1	PLATE, , FOR CS520, CS540 ONLY
4	84800236	1	PLATE, , FOR CS640, CS660 ONLY
5	84056131	1	BUSHING,
6	84056165	AR	SCREW,
7	84056128	1	PLATE,
8	84800247	1	HOUSING, , FOR CS520, CS540 ONLY
8	84800248	1	HOUSING, , FOR CS640, CS660 ONLY
9	84800253	2	KNOB,
10	86629542	AR	NUT, LOCK, M8 x 1.25, Cl 8,
11	140045	AR	WASHER, SPRING, Belleville, M10,
12	84019576	AR	WASHER, 12.2MM
13	322358	AR	WASHER, SPRING, Belleville, M8,
14	100038	1	NUT, LOCK, M12 x 1.75, Cl 8,
15	84056126	1	ROD,
16	9706685	1	NUT, M12, Cl 8,
17	84056140	1	HANDLE, CRANKED,
18	84056127	2	BUSHING,
19	84074791	2	PULLEY,
20	84074790	1	PULLEY, , FOR CS520, CS540 ONLY
20	84056120	1	PULLEY, , FOR CS640, CS660 ONLY
21	84056124	1	PULLEY,
22	84056165	2	SCREW,
23	43139	2	SCREW, {PP:80043139} M10x25
24	43140	AR	BOLT, Hex, M10 x 30, 8.8, Full Thd,
25	9837786	2	SCREW, {PP:89837786} Hex Soc Hd, M12 x 20, 8.8, M12x20
26	16043224	18	BOLT, Hex, M8 x 16, 8.8, Full Thd,
27	120104	AR	BOLT, Hex, M8 x 20, 8.8,
28	43127	AR	BOLT, Hex, M8 x 25, 8.8,
29	300381	1	BOLT, {PP:80300381} Hex, M8 x 35, 8.8, M8x35
30	370002	1	RING, SNAP, {PP:80370002} M25, Ext,
31	84056134	1	CIRCLIP,
32	84074788	1	SHIM, THK. : 1MM
33	84074789	2	SHIM, THK. : 2MM
34	130004	1	PIN, SPLIT (COTTER), {PP:80130004} M3.2 x 25,
35	84056141	1	SPRING,
36	84074786	1	SPRING,
37	84056151	1	PLATE, COVER,
38	84800255	1	SUPPORT,
39	84800257	1	ARM,
40	84790355	1	BELT, TRANSMISSION, , FOR CS520, CS540 ONLY
40	84790356	1	BELT, TRANSMISSION, , FOR CS640, CS660 ONLY
41	84056153	2	WASHER,

19.209(01) CHAFF SPREADER

ссылка	Номер детали	Кол-во	Описание
42	84056137	1	WASHER,
43	84056154	2	WASHER,
44	378244	AR	WASHER, M10,
45	140223	1	WASHER, {PP:80140223} 12.5MM
46	84019577	3	WASHER, 13MM
47	307789	AR	WASHER, {PP:80307789} 8.4MM
48	84800259	1	BUSHING,
49	84800260	1	INDICATOR,

19.210(01) CHAFF SPREADER ROTORS

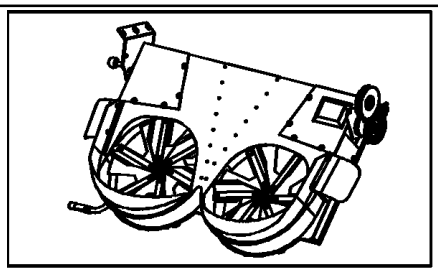

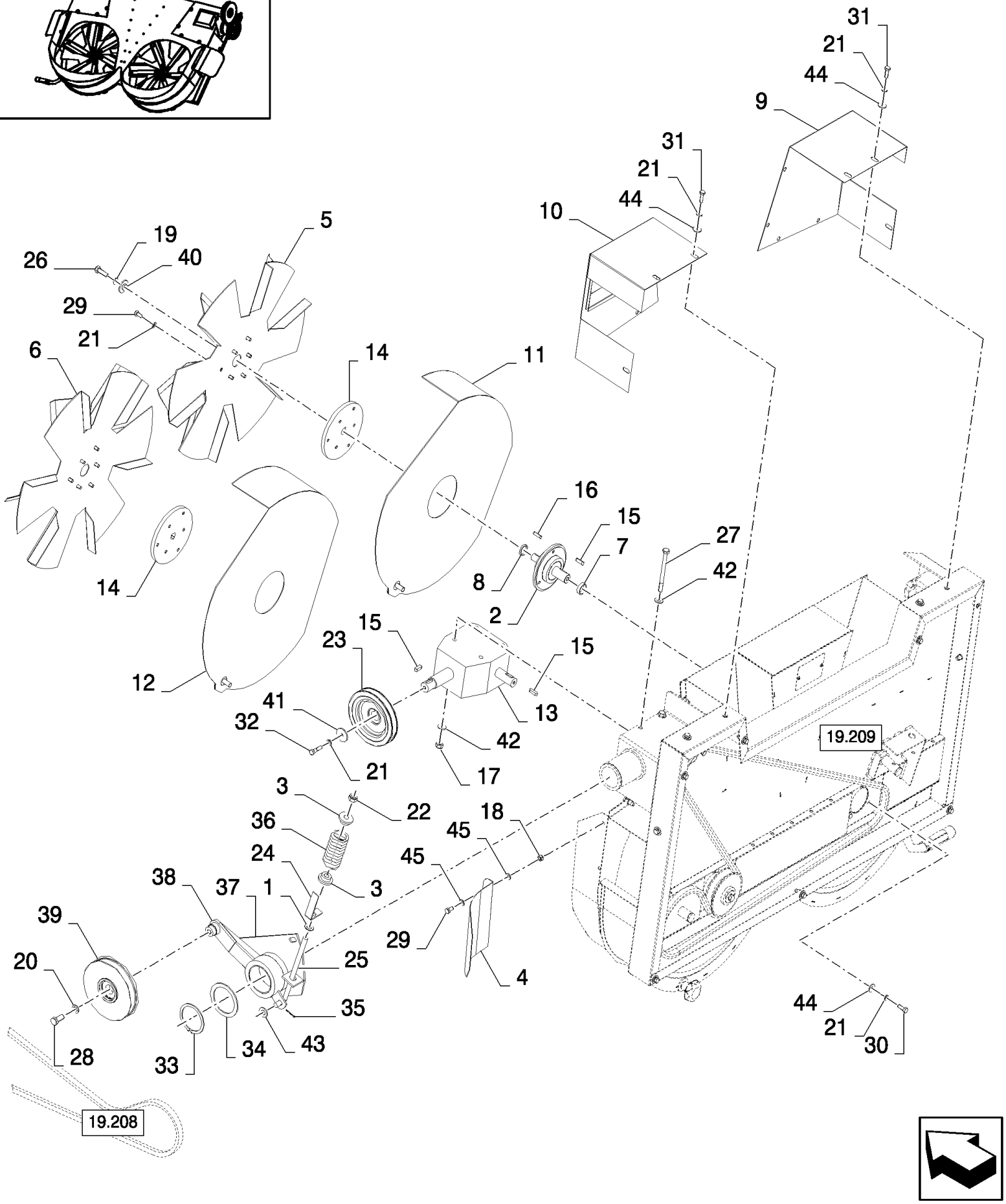

19.210(01) CHAFF SPREADER ROTORS

ссылка	Номер детали	Кол-во	Описание
1	84043655	1	WASHER,
2	84800234	2	HUB,
3	84056165	AR	SCREW,
4	84800237	2	PLATE, , FOR CS520, CS540 ONLY
4	84800238	2	PLATE, , FOR CS640, CS660 ONLY
5	84800239	1	ROTOR, , FOR CS520, CS540 ONLY
5	84800240	1	ROTOR, , FOR CS640, CS660 ONLY
6	84800241	1	ROTOR, , FOR CS520, CS540 ONLY
6	84800242	1	ROTOR, , FOR CS640, CS660 ONLY
7	84056129	2	SPACER,
8	84056133	2	SPACER,
9	84800243	1	COVER, , FOR CS520, CS540 ONLY
9	84800244	1	COVER, , FOR CS640, CS660 ONLY
10	84800245	1	COVER, , FOR CS520, CS540 ONLY
10	84800246	1	COVER, , FOR CS640, CS660 ONLY
11	84800249	1	PLATE, COVER, , FOR CS520, CS540 ONLY
11	84800250	1	PLATE, COVER, , FOR CS640, CS660 ONLY
12	84800251	1	PLATE, COVER, , FOR CS520, CS540 ONLY
12	84800252	1	PLATE, COVER, , FOR CS640, CS660 ONLY
13	84056139	1	GEARBOX,
14	84056121	2	HUB,
15	170005	4	KEY, {PP:80170005}
16	84056144	2	KEY,
17	100037	4	NUT, M10 x 1.5, Cl 8,
18	86629542	AR	NUT, LOCK, M8 x 1.25, Cl 8,
19	140045	AR	WASHER, SPRING, Belleville, M10,
20	84019576	AR	WASHER, 12.2MM
21	322358	AR	WASHER, SPRING, Belleville, M8,
22	100038	1	NUT, LOCK, M12 x 1.75, Cl 8,
23	84800254	1	PULLEY,
24	84056132	1	INDICATOR,
25	84056165	1	SCREW,
26	43140	AR	BOLT, Hex, M10 x 30, 8.8, Full Thd,
27	120118	4	BOLT, Hex, M10 x 120, 8.8, Full Thd,
28	9706687	1	BOLT, Hex, M12 x 30, 8.8,
29	16043224	AR	BOLT, Hex, M8 x 16, 8.8, Full Thd,
30	120104	AR	BOLT, Hex, M8 x 20, 8.8,
31	43127	AR	BOLT, Hex, M8 x 25, 8.8,
32	300381	1	BOLT, {PP:80300381} Hex, M8 x 35, 8.8, M8x35
33	300636	1	CIRCLIP, {PP:80300636} M70, Ext,
34	84056138	1	SHIM, THK. : 3.5MM
35	130004	1	PIN, SPLIT (COTTER), {PP:80130004} M3.2 x 25,
36	84056141	1	SPRING,
37	84800256	1	SUPPORT,
38	84800258	1	ARM,

19.210(01) CHAFF SPREADER ROTORS

ссылка	Номер детали	Кол-во	Описание
39	84056163	1	PULLEY,
40	84056152	2	WASHER,
41	84056137	1	WASHER,
42	378244	AR	WASHER, M10,
43	140223	1	WASHER, {PP:80140223} 12.5MM
44	307789	AR	WASHER, {PP:80307789} 8.4MM
45	378243	8	WASHER, M8,

HEADERS	**BEC CUEILLEUR**	**BARRA**	**SKÆREBORDE**
BARRA	**SCHNEIDWERK**	**CABEÇALHO DE CEIFA**	**MAAIBORDEN**

SEC. 20

High-Capacity Grain Header
SEE CATALOGUE 603.27.017.00

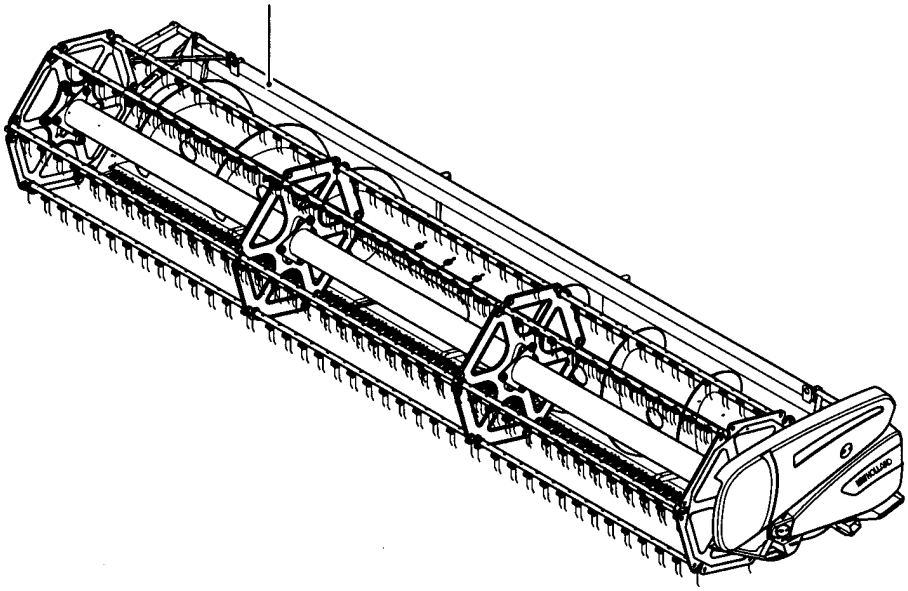

Maize Header
SEE CATALOGUE 603.27.007.00

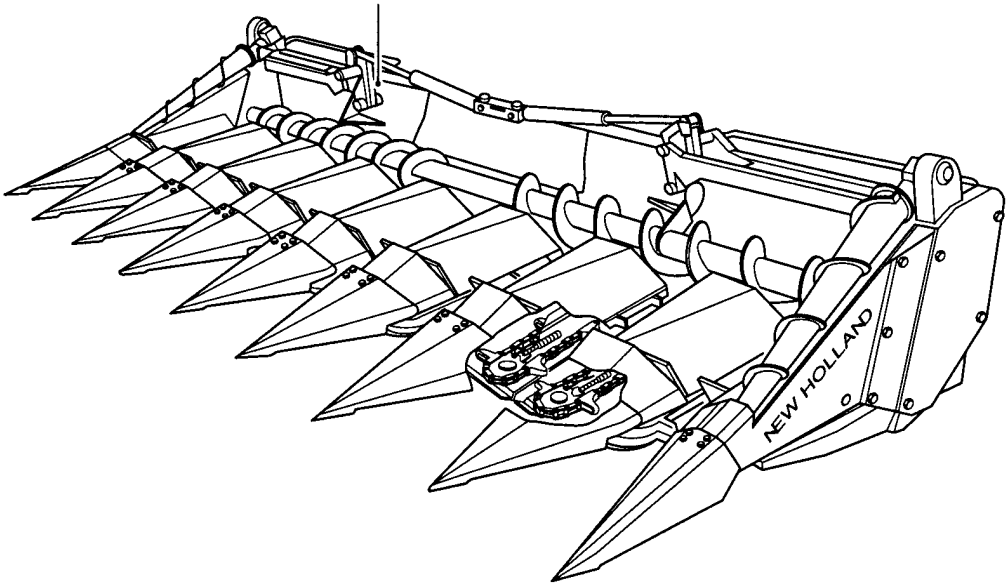

20.000(01) SECTION LIST 20

ссылка	Номер детали	Кол-во	Описание