Руководство по зксплуатации

RS-M 1050/1700

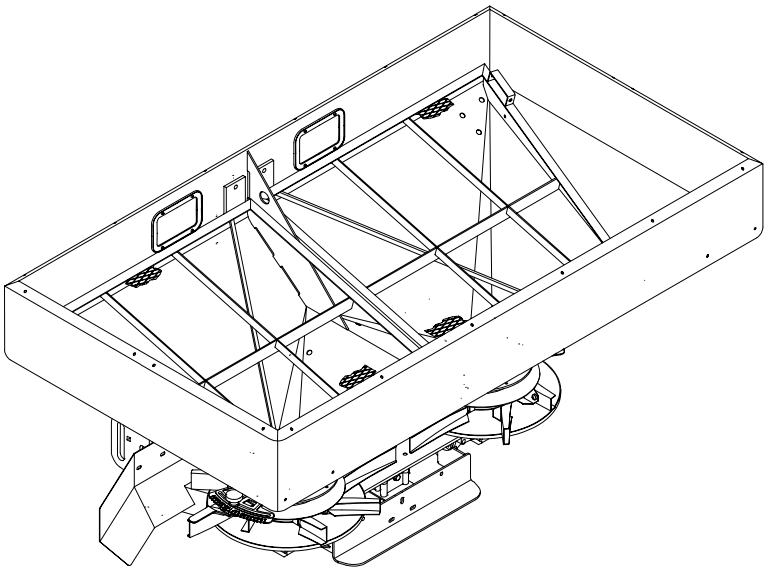

kverneland group

© Kverneland

E?)+C / !=3+

1"b&:,>4, @ F@@H&,HFH&44 2
?$V,, @B4F">4, ... 3
AD,*4F:@&4, ... 3
G,N>4R,F84, *">>Z, ... 4
AD"&4:" H,N>484 $,2@B"F>@FH4 6
AD"&4:" H,N>484 $,2@B"F>@FH4 8

A?)'?G?%7! 7 C!#?G+, C+'I93C?%73 3 AC!%39!]7EA9!IG!O33 9
="&,F8" >" HD"8H@D 9
A@*F@,*4>,>4, 8 (4*D@F4FH,<, ... 10
AD4F@,*4>,>4, 8"D*">>@(@ &":" 11
I8@D"R4&">4, 8"D*">>@(@ &":" 11
7@>HD@:\ BD,*@ND">4H,:\>@6 <JLHZ 11
'@D42@>H":\>"b JFH">@&8" 12
C,(J:4D@&84 B,D,* &>,F,>4,< J*@$D,>46 12
C"$@R"b T4D4>" &>,F,>4b 13
C,(J:4D@&8" *@2Z &>,F,>4b 4 &ZN@*>@(@ @H&,DFH4b HJ8@>"BD"&4H,:b 14
C"$@HZ F 8@<B:,8H@< *:b JFH">@&84 &>,F,>4b <":ZN *@2 16
AD@$>"b >"FHD@68" 17
C"$@H" D"FF,4&"H,:b >" &>,F,>44 J*@$D,>46 19
A@&@D@HZ "(D,("H" 4 D"FF,4&">4, >" 8D"` B@:b 20
%>,F,>4, >" 8D"` B@:b BD4 D"$@H, *&JN *4F8@& 22
%>,F,>4, >" 8D"` B@:b BD4 D"$@H, @*>@(@ *4F8" 23
M"D"8H,D4FH48" D"FBD,*,:,>4b J*@$D,>46 BD4 4FB@:\2@&">44 V4H8"-@(D">4R4H,:b 24
="FHD@68" V4H8"-@(D">4R4H,:b 24
%>,F,>4, >" 8D"` B@:b @*>4< *4F8@< 2" *&" BD@N@*" F@ V4H8@<-@(D">4R4H,:,< (<,H@* !) 25
%>,F,>4, >" 8D"` B@:b *&J<b *4F8"<4 BD4 @*>@< BD@N@*, F@ V4H8@<-@(D">4R4H,:,< (<,H@* %) 25

?Q3EG7!, E+C%3E 3 G+M=3Q+E7?+ ?#E9I / 3%!=3+ 26
C,(J:4D@&8" 2"F:@>84 *@24DJ`V,(@ JFHD@6FH&" 28
7@>HD@:\ 4 D,(J:4D@&8" *@24DJ`V4N @H&,DFH46 28
7@>HD@:\ D,(J:4D@&84 &ZN@*>@(@ @H&,DFH4b *@24DJ`V,(@ JFHD@6FH&" 29
G,FHZ *:b @P,>84 8"R,FH&" D"FBD,*,:,>4b J*@$D,>46.(*@B@:>4H,:\>@, @$@DJ*@&">4,) 30
I8"2">4b 8 H,FHJ *@2Z &>,F,>4b J*@$D,>46 30
AD@&,*,>4, H,FH" >" @BD,*,:,>4, N"D"8H,D4FH484 D"FBD,*,:,>4b J*@$D,>46 31
?P,>8" N"D"8H,D4FH484 D"FBD,*,:,>4b 31

?$@DJ*@&">4, *@B@:>4H,:\>@, ... 32

%@2<@0>Z, >,4FBD"&>@FH4 4 FB@F@$Z 4N JFHD">,>4b 33

1! a%9+=3+ ? E??G%+GEG%33

*4D,8H4&, +]E 89 / 392 / +]E

; Z, Kverneland Nieuw-Vennep B.V.
Hoofdweg 1278
NL-2153 LR Nieuw-Vennep

@$Xb&:b,< F B@:>@6 @H&,HFH&,>>@FH\`, RH@ >"T BD@*J8H
D"FF,4&"H,:4 <4>,D":\>ZN J*@$D,>46 H4B" <@*,:,6

RS-M 1050 / 1350 / 1700

B@:>@FH\` F@@H&,HFH&J,H HD,$@&">4b< >40,JB@<b>JHZN >@D<
4:4 >@D<"H4&>Z< *@8J<,>H"<
EN292-2, EN294, prEN745 (<"6 1992),
F@@H&,HFH&J`V4N B@:@0,>46 *4D,8H4& 89 / 392 / +]E 4 91 / 368 / +]E.

Nieuw-Vennep, 1 b>&"Db 2001

CJ8@&@*4H,:\ BD@42&@*FH&,>>@(@ F@&,H"

]H@ DJ8@&@*FH&@ 4 &Fb &>,F,>>"b & >,(@ 4>L@D<"P4b 4 4::`FHD"P44 2"V4V,>Z F@(:"F>@ "&H@DF8@<J BD"&J. 7"0*@, BD4<,>,>4, 4N &>, (D">4P "&H@DF8@(@ BD"&" $,2 B4F\<,>>@(@ F@(:"F4b 42*"H,:b b&:b,HFb 8"H,(@D4R,F84 >,*@BJFH4<Z<. ]H@ @H>@F4HFb, & R"FH>@FH4, 8 &Fb8@(@ D@*" D"2<>@0,>4b<, B,D,&@*"<, <48D@^8D">42"P4b<, &8:`R"b <48D@L4T84 4 <"8D@L4T84, " H"80, 8 2"(DJ28, 4/4:4 @$D"$@H8, & ^:,8HD@>>ZN 4 @BH4R,F84N F4FH,<"N, &8:`R"b &F, &4*,@F4FH,<Z 4 F4FH,<Z :"2,D>@(@ *4F8".

?#U++ ?A3E!=3+

C"FF,4&"H,:\ <4>,D":\>ZN J*@$D,>46 L4D<Z %48@> b&:b,HFb >"&,F>@6 >" HD"8H@D <"T4>@6 F BD4&@*@< @H &":" @H$@D" <@V>@FH4, 4<,,H *&" D"FF,4&"`V4N *4F8" F &@F,<\` :@B"H8"<4 8"0*Z6.)4F84 <@>H4DJ`HFb & @*>@6 B:@F8@FH4, RH@ @$,FB,R4&",H D"FBD,*,:,>4, J*@$D,>46 D"&>@<,D>Z< (@D42@>H":\>Z< B@H@8@< >"* B@:,<. ="* *@24DJ`V4<4 *4F8"<4 D"2<,V,>Z *@24DJ`V4, JFHD@6FH&" J*@$D,>46, D,(J:4DJ`V4, *@2Z &ZF,&" J*@$D,>46; @$" *@24DJ`V4N JFHD@6FH&" >"N@*bHFb H@R>@ >"* &ZBJF8>@6 HDJ$@6 HJ8@>"BD"&4H,:b. ;4>,D":\>Z, J*@$D,>4b B@B"*"`H >" &D"V"`V4,Fb D"FF,4&"`V4, *4F84, BD4 ^H@< H@R8" B@B"*">4b (D">J: >" D"FF,4&"`V4, :@B"H84 *4F8@& D,(J:4DJ,HFb B@:@0,>4,< HJ8@>"BD"&4H,:b. 32-2" ^H@(@ (D">J:Z >"N@*bHFb & F@FH@b>44 &D"V,>4b, 8@(*" @>4 F@BD48"F"`HFb :@B"H8"<4 D"FF,4&"`V,(@ *4F8".

):b @$,FB,R,>4b H@R>@6 D,(J:4D@&84 >" HD,$J,<J` *@2J &>,F,>4b <"T4>" @F>"V,>" F @$D"H>@6 FH@D@>Z *&J<b D,(J:4D@&@R>Z<4 TH">("<4, F B@<@V\` 8@H@DZN JBD"&:b`H 2"F:@>8@6 *@24DJ`V,(@ JFHD@6FH&". ?H8DZH4, 4 2"8DZH4, ^H@6 2"F:@>84 &ZB@:>b,HFb F B@<@V\` (4*D"&:484 42 8"$4>Z HD"8H@D". GD"8H@D *@:0,> $ZH\ @F>"V.> (4*D"&:4R,F84< &,>H4:,< *&@6>@(@ *,6FH&4b. =" :,&@6 4 BD"&@6 FH@D@>"N <"T4>Z >"N@*bHFb DZR"(4 *:b D,(J:4D@&84 B@:@0,>4b &ZBJF8>@(@ @H&,DFH4b HJ8@>"BD"&4H,:b.]H" JFH">@&8" &ZBJF8>@(@ @H&,DFH4b HJ8@>"BD"&4H,:b BD@42&@*4HFb & 2"&4F4<@FH4 @H &4*" J*@$D,>46 4 *@2Z &>,F,>4b >" (,8H"D 4 &ZB@:>b,HFb & F@@H&,HFH&44 F D,(J:4D@&@R>@6 H"$:4P,6. AD4 42<,>,>44 *@2Z &>,F,>4b 4:4 &4*" J*@$D,>46 (BD4 @*4>"8@&@6 D"$@R,6 T4D4>, &>,F,>4b 4 F8@D@FH4 *&40,>4b "(D,("H") >,@$N@*4<@ D,(J:4D@&"H\ H@:\8@ B@:@0,>4, 2"F:@>84 *@24DJ`V,(@ JFHD@6FH&" 4 &@2<@0>@, B@:@0,>4, &ZBJF8>@(@ @H&,DFH4b HJ8@>"BD"&4H,:b.

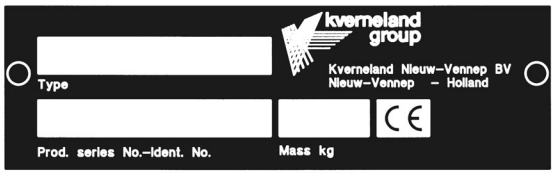

Дата приобретения

– –

AC+)3E9?%3+

]H@ DJ8@&@*FH&@ B@ ^8FB:J"H"P44 D"FF,4&"H,:b <4>,D":\>ZN J*@$D,>46 L4D<Z %48@> %Z *@:0>Z &>4<"H,:\>@ BD@R4H"H\. 1*,F\ %Z >"6*.H, &F, J8"2">4b B@ D,(J:4D@&8"< 4 H,N>4R,F8@<J @$F:J04&">4` <"T4>Z, " H"80, D,8@<,>*"P44 B@ JFHD">,>4` >,4FBD"&>@FH,6.

AD@R4H"6H, &>4<"H,:\>@ DJ8@&@*FH&@ B@ ^8FB:J"H"P44 4 D,8@<,>*"P44 B@ H,N>48, $,2@B"F>@FH4 BD,0*,, R,< <"T4>J &&,FH4 & ^8FB:J"H"P4`. A@2"$@H\H,F\ @ H@<, RH@$Z 8"0*Z6, 8H@ $J*,H D"$@H"H\ >" <"T4>,, 2>": DJ8@&@*FH&@ B@ ^8FB:J"H"P44.

+F:4 %Z 4<,,H, &@BD@FZ 4:4 B@0,:">4b B@ %"T,6 <"T4>,, @$D"V"6H,F\, B@0":J6FH", 8 %"T,<J H@D(@&@<J BD,*FH"&4H,:` L4D<Z %48@>. ?> @$JR,> L4D<@6 4 B@^H@<J 8@<B,H,>H,> ?> D"FB@:"(",H H"80, @D4(4>":\>Z<4 2"B"F>Z<4 R"FHb<4 4 F@@H&,HFH&J`V4< 4>FHDJ<,>H@<, @N@H>@ 4 $ZFHD@ B@<@0,H %"<.

=" %"T,6 <"T4>, BD48D,B:,>" H"$:4R8" F ,. F,D46>Z< >@<,D@<. %>,F4H, ^H@H >@<,D & %"T ("D">H46>Z6 H":@> 4 ND">4H, ,(@ &<,FH, F *DJ(4<4 *@8J<,>H"<4 B@ ^H@6 <"T4>,.

]H4 *">>Z, <@(JH BD4(@*4H\Fb B@2*>,,, BD4 &@2<@0>@6 B,D,B4F8, B@ <"T4>, 4 BD4 2"8"2, 2"B"F>ZN R"FH,6.

G+M=3Q+E73+)!==Y+

;?)+9[	RS-M 1050	RS-M 1350	RS-M 1700
+<8@FH4 (*<^{3})	1050	1350	1700
1"(DJ2@R>"b &ZF@H"(F<)	106	119	129
S4D4>" $J>8,D"(F<)	204	204	226
):4>" $J>8,D"(F<)	199	199	221
E@$FH&,>>"b <"FF"(8()	300	324	330
)@BJFH4<"b 2"(DJ28"(8()	1700	1700	1700

I %E+M ;?)+9+5

A@*"R" *@24DJ`V,(@ JFHD@6FH&"(8(/ <4>)	10- 280
G4B >"&,F>@(@ JFHD@6FH&"	7"H,(@D4b II
?$@D@HZ %? ; (@$ / <4>)	540
S4D4>" &>,F,>4b J*@$D,>46 (<)	10, 12, 15/16, 18, 20/21, 24, 27/28
%<,FH4<@FH\ B@ F<"28, D,*J8H@D" BD4&@*" D"FF,4&"`V4N *4F8@& (F<^{3})	180 + 20 Gear grease EP 00/000
%<,FH4<@FH\ B@ F<"28, P,>HD":\>@(@ D,*J8H@D" (F<^{3})	200 + 20 Gear grease EP 00/000
%>,T>46 TJ< {dB (A)}	<75

RS-M
smal
small
etroit
Schmal
estrecho
stretto
estreito
smal
maly
úzký
ВиА сбоку

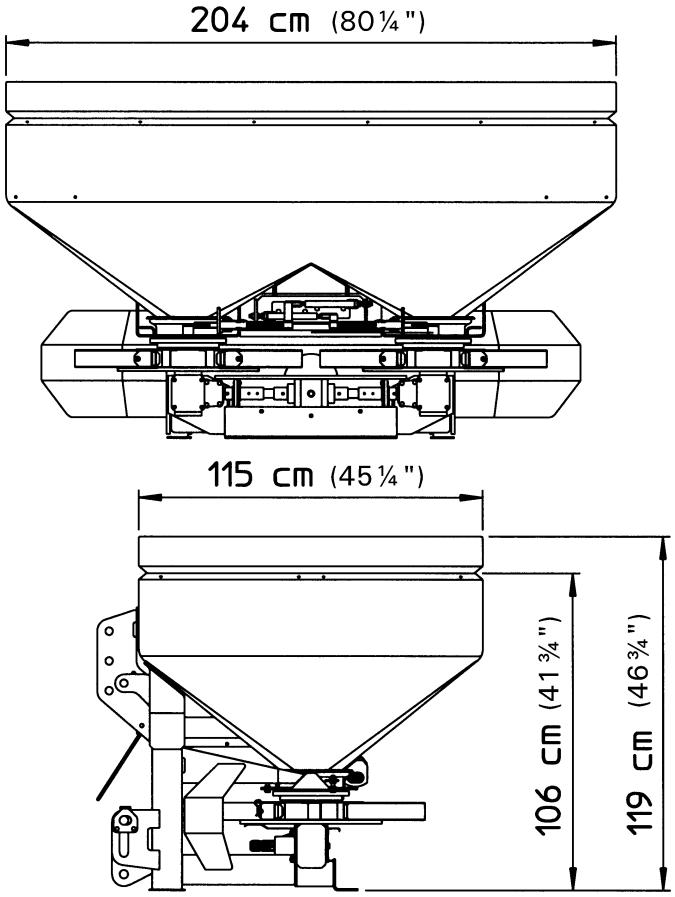

RS-M
breed
wide
large
Breit
ancho
largo
bred
vid
duzy
s'iroký
ВиА сзаАи

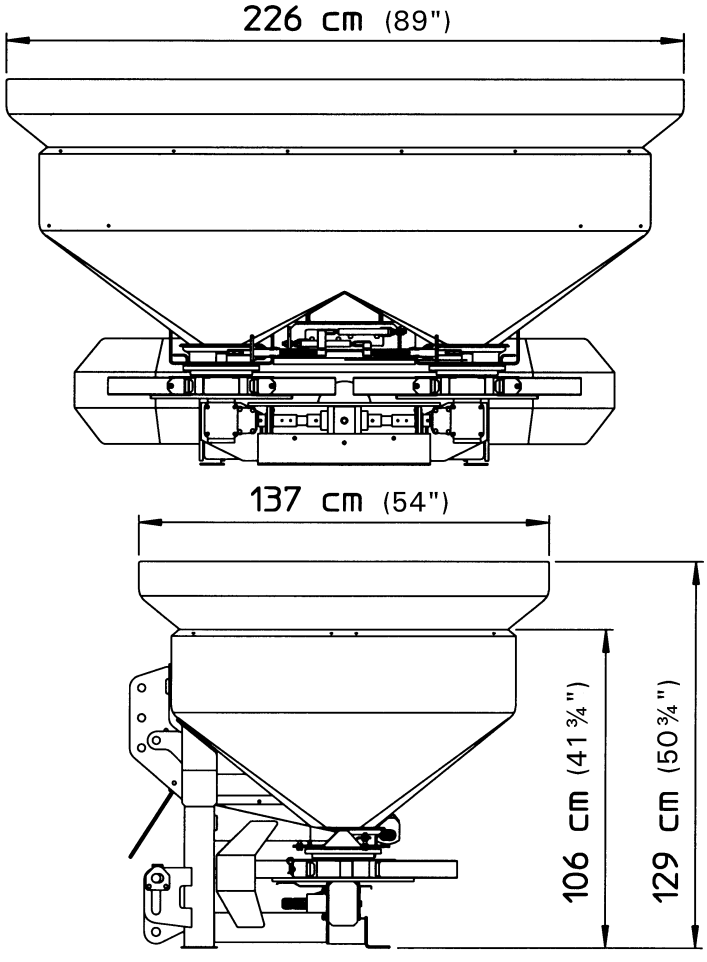

AC!%39! G+M=373 #+1?A!E=?EG3

?A!E=?EG[: +F:4 %Z &4*4H, ^H@H F4<&@: c ^H4< BD,*JBD,0*,>4,<, H@ ^H@ @2>"R",H, RH@ FJV,FH&J,H @FHD"b @B"F>@FH\ *:b 042>4 4 2*@D@&\b R,:@&,8" 4 04&@H>ZN.

I7!1!=3+:]H@ BD,*JBD,0*,>4, J8"2Z&",H >" &@2<@0>J` @B"F>@FH\ JV,D$" <"T4>"<, D"FH,>4b<, 2*">4b< 4 H.*., " H"80, >" &@2<@0>Z, L4">F@&Z, 4/4:4 `D4*4R,F84, BD@$:,<Z (("D">H4b, @H&,HFH&,>>@FH\ 4 H. B.).

%=3;!=3+: E@$:`*,>4, ^H4N 2"<,R">46 *,:"`H D"$@HJ:,(R,, :JRT, 4 $,2@B"F>,,

A,D,* &&@*@< & ^8FB:J"H"P4` <"T4>Z R4H"6H, DJ8@&@*FH&@ B@ ^8FB:J"H"P44 4 &ZB@:>b6H, &F, J8"2">4b, F@*,D0"V4,Fb & DJ8@&@*FH&,.

?$V,, HD,$@&">4,:

E@ &F,<4 BD"&4:"<4 H,N>484 $,2@B"F>@FH4 >,@$N@*4<@ @2>"8@<4H\ *DJ(4N B@:\2@&"H,:,6!

AC!%39! G+M=373 #+1?A!E=?EG3 AC3 %=+E+=33 I)?#C+=35

1. GD"8H@D"<4 F >"&,F>Z<4 <"T4>"<4 <@(JH JBD"&:bH\ H@:\8@ :`*4 F 18 :,H. ;@:@*Z, :`*4 & &@2D"FH, @H 16 *@ 17 :,H *@:0>Z 4<,H\ &@*4H,:\F8@, J*@FH@&,D,>4, >" JBD"&:,>4, HD"8H@D@< 4 <@(JH D"$@H"H\ H@:\8@ & *>,&>@, &D,<b.
2. 1"BJF8 *&4("H,:b 4 @BD@$Z&">4, "(D,("H" >48@(*" >,:\2b BD@42&@*4H\ & 2"8DZHZN B@<,V,>4bN 42-2" @B"F>@FH4 @HD"&:,>4b &ZN:@B>Z<4 ("2"<4.
3. ;"T4>J 4 HD"8H@D >,@$N@*4<@ BD@&,DbH\ B,D,* 8"0*Z< BD4<,>,>4,< >" F@@H&,HFH&4, HD,$@&">4b< H,N>484 $,2@B"F>@FH4 4 *@D@0>@(@ *&40,>4b!
4. ="Db*J F@ FB,P4L4R,F84<4 J8"2">4b<4 ^H@(@ DJ8@&@*FH&" B@ ^8FB:J"H"P44 >,@$N@*4<@ F@$:`*"H\ @$V4, HD,$@&">4b H,N>484 $,2@B"F>@FH4 4 4>FHDJ8P44 BD,*JBD,0*,>4b >,FR"FH>ZN F:JR",&! ;"T4>J >,@$N@*4<@ F@*,D0"H\ & R4FH@H, 4 >" J*":,>44 @H <4>,D":\>ZN J*@$D,>46, RH@ $J*,H FB@F@$FH&@&"H\ 4 B@0"D>@6 $,2@B"F>@FH4.
5. =,@$N@*4<@ FHD@(@ F@$:`*"H\ &"0>Z, J8"2">4b, F@*,D0"V4,Fb & >"8:,,>>ZN >" <"T4>, H"$:4R8"N; ^H@ &"0>@ *:b $,2@B"F>@FH4 BD,*BD4bH4b; 4N F@$:`*,>4, F:J04H %"T,6 F@$FH&,>>@6 $,2@B"F>@FH4!
6. AD4 4FB@:\2@&">44 @$V,FH&,>>ZN *@D@(F@$:`*"6H, *,6FH&J`V4, BD"&4:" *@D@0>@(@ *&40,>4b!
7. ?2>"8@<\H,F\ B,D,* &&@*@< <"T4>Z & ^8FB:J"H"P4` F@ &F,<4 F4FH,<"<4 4 "(D,("H"<4, 4N LJ>8P4b<4, " H"80, F BD"&4:"<4 @$F:J04&">4b! AD4 D"$@H, >" <"T4>, ^H@ <@0,H $ZH\ F:4T8@< B@2*>@!
8. ?*,0*" @B,D"H@D"-B@:\2@&"H,:b *@:0>" B:@H>@ BD4:,("H\ 8 ,(@ H,:J, >@ >, FH,F>bH\ F&@$@*J ,(@ *&40,>46! 32$,("6H, F&@$@*>@6 @*,0*Z!
9. A@<>4H,, RH@ B@F:, &Z8:`R,>4b BD4&@*" D"$@R4, @D(">Z BD@*@:0"`H &D"V"H\Fb! #J*\H, &>4<"H,:\>Z 4 *@0*4H,F\ B@:>@6 @FH">@&84 D"FF,4&"`V4N *4F8@& (F<@HD4 H"80, BJ>8H 45)!
10. A,D,* HD@(">4,< F <,FH" 4 B,D,* &8:`R,>4,< <"T4>Z BD@&,D\H, $:40"6T,, @8DJ0,>4, <"T4>Z 4 HD"8H@D"! ?$D"H4H, &>4<">4, >" *,H,6! #J*\H, BD,*JF<@HD4H,:\>Z!
11. 1"BD,V,>@ >"N@*4H\Fb >" <"T4>, BD4 D"$@H, 4 BD4 B,D,,2*"N!
12.)@B@:>4H,:\>Z, BD4>"*:,0>@FH4 2"8D,B:b6H, H@:\8@ F@(:"F>@ 4>FHDJ8P44 4 H@:\8@ >" BD,*JF<@HD,>>ZN *:b ^H@(@ BD4FB@F@$:,>4bN; @$D"V"6H, &>4<">4, >" >"*,0>@FH\ $:@84D@&84.
13. AD4 >"&,F8, >" HD"8H@D 4 @HP,B8, <"T4>Z BD@b&:b6H, @F@$J` @FH@D@0>@FH\! AD4<,>b6H, >40>46 F@,*4>4H,:\>Z6 ^:,<,>H F BD,*JF<@HD,>>@6 L48F4DJ`V,6 BDJ04>@6 4 H@:\8@ B@FH"&:b,<Z6 4:4 D"&>@P,>>Z6 &,DN>46 BD4F@,*4>4H,:\>Z6 ^:,<,>H.
14. AD@&,Db6H, HD">FB@DH>Z, BD4>"*:,0>@FH4, >"BD4<,D, BD4$@DZ @F&,V,>4b, BD,*JBD,0*"`V4, >"*B4F4, H"$:4PZ 4 H. B., F@@H&,HFH&J`V4, 2"V4H>Z, JFHD@6FH&" 4 BD4 >,@$N@*4<@FH4 JFH">@&4H, 4N.
15. ;"T4>J B,D,* HD">FB@DH>Z< B,D,,2*@< B,D,&@*4H, & HD">FB@DH>@, B@:@0,>4, 4 & F@@H&,HFH&44 F 4>FHDJ8P4,6 L48F4DJ6H,.
16. =48@(*" >, B@84*"6H, <,FH@ &@*4H,:b && &D,<b *&40,>4b "(D,("H"!
17. %Z$4D"6H, F8@D@FH\ *&40,>4b & 2"&4F4<@FH4 @H JF:@&46 <,FH>@FH4 4 D,:\,L"! AD4 *&40,>44 >" 8DJHZN B@*X.<"N 4 F8:@>"N, D"$@H, B@B,D,8 F8:@>" >48@(*" >, *,:"6H, D,284N B@&@D@H@&!
18. A@<>4H,, RH@ >"&,F>Z, @DJ*4b FJV,FH&,>>@ &:4b`H >" JFH@6R4&@FH\ *&40,>4b, JBD"&:b,<@FH\ 4 H@D<@2>Z, F&@6FH&" "(D,("H"! ?$D"V"6H, &>4<">4, B@^H@<J >" 8"R,FH&@ JBD"&:,>4b 4 H@D<@0,>4b, BD4 >,@$N@*4<@FH4, JFH">@&4H, *@B@:>4H,:\>Z, $"::"FH>Z, (DJ2Z FB,D,*4 HD"8H@D"!
19. IR4HZ&"6H, BD4 B@&@D@H"N $@:\TJ` T4D4>J 4 *:4>J >"&,F>@(@ "(D,("H" ($@:\T46 D"*4JF B@&@D@H") 4/4:4 $@:\TJ` ,(@ <"FFJ, F:,*@&"H,:\>@, $@:\TJ` 4>,DP4@>>@FH\!
20. AD4<,>b6H, H@:\8@ B@:>@FH\` 4FBD"&>J` <"T4>J, J8@<B:,8H@&">>J` 2"V4H>Z<4 BD4FB@F@$:,>4b<4! 1"V4H>Z, @(D"0*,>4b D"FF,4&"`V4N *4F8@& BD,*@H&D"V"`H *@FHJB & @B"F>Z, 2@>Z 4 B@^H@<J >J0>@ F@*,D0"H\ 4N & N@D@T,< F@FH@b>44. ?>4 F:J0"H *:b %"T,6 $,2@B"F>@FH4 4 *DJ(@(@ B,DF@>":"!
21. =48H@ >, *@:0,> >"N@*4H\Fb & D"$@R,6 2@>, D"FF,4&">4b J*@$D,>46 <"T4>@6!]H@ @B"F>@!

22. AD,0*, R,< B@84>JH\ 8"$4>J HD"8H@D" B@:>@FH\` &Z8:`R4H, BD4&@* <"T4>Z!)&4("H,:\ 2"(:JT4H, 4 &Z>\H, 8:`R 42 2"<8" 2"04(">4b!
23. =48H@ >, <@0,H >"N@*4H\Fb <,0*J <"T4>@6 4 HD"8H@D@<, *@ H,N B@D B@8" >, $J*,H &8:`R,> FH@b>@R>Z6 H@D<@2 4/4:4 4F8:`R,>" &@2<@0>@FH\ @H8"H" 2" FR.H BD4<,>,>4b BD@H4&@@H8"H>ZN JFHD@6FH&.
24. A,D,* >"&,T4&">4,< <"T4>Z >" HD,NH@R,R>J` >"&,F>J` F4FH,<J HD"8H@D" DZR"(JBD"&:,>4b (4*D@B@*X.<>48@< JFH">@&4H, & H"8@, B@:@0,>4,, RH@$Z 4F8:`R4H\ F"<@BD@42&@:\>@, @BJF8">4, ,(@ 4:4 B@*X.<.
25. 7"H,(@D4b >"&,F>@(@ <,N">42<" <"T4>Z *@:0>" F@&B"*"H\ F 8"H,(@D4,6 >"&,F84 HD"8H@D"; <"T4>J BD4&@*bH & F@@H&,HFH&4, F HD"8H@D@<!
26. A@<>4H,, RH@ & 2@>, F4FH,<Z Hb(4 DZR"(@& HD.NH@R,R>@6 >"&,F>@6 F4FH,<Z >"N@*4HFb >"4$@:,, @B"F>"b @$:"FH\ B@:JR,>4b HD"&<.
27. AD4 H,N>4R,F8@< @$F:J04&">44 >"&,F>@6 F4FH,<Z HD"8H@D" &>, 8"$4>Z >,:\2b >"N@*4H\Fb <,0*J HD"8H@D@< 4 <"T4>@6.
28. ?$,FB,R4&"6H,, RH@$Z <"T4>" & HD">FB@DH>@< B@:@0,>44 &F,(*" $Z:" >"*.0>@ 2"L48F4D@&">".
29. AD4 *&40,>44 B@ *@D@(, F <"T4>@6, >"N@*bV,6Fb & HD">FB@DH>@< B@:@0,>44, DZR"(JBD"&:,>4b (4*D@P4:4>*D@< B@*X,<" *@:0,> $ZH\ >"*,0>@ 2"L48F4D@&"> BD@H4& @BJF8">4b.
30. A,D,* BD4<,>,>4,< HV"H,:\>@ BD@&,D\H, H,N>4R,F8@, F@FH@b>4, D"FF,4&"H,:b <4>,D":\>ZN J*@$D,>46.
31. A,D,* D"$@H"<4 B@ BD@&,D8, H,N>4R,F8@(@ F@FH@b>4b &Z8:`R4H, &": @H$@D" <@V>@FH4 BD4&@*" D"FF,4&"H,:b, &Z8:`R4H, *&4("H,:\ 4 J*":4H, 8:`R 42 2"<8" 2"04(">4b.

?A!E=?EG[: QH@$Z 42$,0"H\ F"<@BD@42&@:\>@(@ *&40,>4b <"T4>Z, *@ &ZN@*" 42 8"$4>Z J$,*4H,F\ & B@:>@6 @FH">@&8, "(D,("H" (F<@HD4 H"80, BJ>8H 45)

32. A@&D,0*,>4b 4 >,4FBD"&>@FH4 FD"2J JFHD">b6H,, BD,0*, R,< <"T4>J F>@&" &8:`R"H\ & D"$@HJ.

33. ?A!E=?EG[:AD4 4FB@:\2@&">44 >4HD"H@F@*,D0"V4N <4>,D":\>ZN J*@$D,>46 FJV,FH&J,H @B"F>@FH\ &2DZ&", ,F:4 @>4 $J*JH B@*&,D(>JHZ &@2*,6FH&4` @H8DZH@(@ @(>b. A@^H@<J B,D,* D,<@>H@< F&"D@R>Z< 4:4 D,0JV4< @$@DJ*@&">4,< @$b2"H,:\>@ J*":4H, F <"T4>Z @FH"H84 <4>,D":\>ZN J*@$D,>46, & H@< R4F:, 42 J(:J$:,>46 4 HDJ$.

AC3%?) ?G%!9! ?G#?C! ;?U=?EG3 3 AC3%?) Q+C+1 7!C)!==Y5%!9

34. AD@&,D\H, 8"D*">>Z6 &": B,D,* D,04<@< D"$@HZ >" &@2<@0>Z, *,L,8HZ 4 42>@FZ.
35. 3FB@:\2J6H, H@:\8@ BD,*B4F">>Z6 42(@H@&4H,:,< 8"D*">>Z6 &":.
36. 1"V4H>Z6 8@0JN 8"D*">>@(@ &":" 4 BD,*@ND">4H,:\>Z6 V4H@8 &":" @H$@D" <@V>@FH4 *@:0>Z $ZH\ F<@>H4D@&">Z & BD"&4:\>@< F@FH@b>44!
37. ?$D"H4H, &>4<">4, >" BD"&4:\>@FH\ F@$:`*,>4b BD,*B4F">>@(@ B,D,8DZH4b B@:J@F,6 T"D>4D" 4 HDJ$ 2"V4H>@(@ 8@0JN" 8"D*">>@(@ &":" 8"8 & HD">FB@DH>@< B@:@0,>44, H"8 4 & D"$@R,< B@:@0,>44.
38. IFH">@&8J 4 *,<@>H"0 8"D*">>@6 B,D,*"R4 <@0>@ BD@42&@*4H\ H@:\8@ BD4 &Z8:`R,>>@< *&4("H,:, HD"8H@D" 4 &Z>JH@< 42 2"<8" 8:`R, 2"04(">4b.
39. ?$D"H4H, &>4<">4, >" BD"&4:\>@FH\ <@>H"0", $,2@B"F>@FH\ 4 L48F"P4` 8"D*">>@(@ &":".
40. 1"V4H>Z6 8@0JN 8"D*">>@(@ &":" B@FD,*FH&@< B@*&,F>@6 P,B4 *@:0,> $ZH\ 2"8D,B:,> @H BD@&@D"R4&">4b.
41. A,D,* &8:`R,>4,< &":" @H$@D" <@V>@FH4 BD@&,D\H, F@@H&,HFH&4, >"BD"&:,>4b ,(@ &D"V,>4b >"BD"&:,>4` &D"V,>4b BD4&@*>@(@ <,N">42<" <"T4>Z! Q"FH@H" &D"V,>4b &":" @H$@D" <@V>@FH4 >, <@0,H >4 & 8@,< F:JR", BD,&ZT"H\ 540 @$@D@H@& & <4>JHJ.
42. =48@(*" >, &8:`R"6H, &": @H$@D" <@V>@FH4 BD4 &Z8:`R,>>@< *&4("H,:,!
43. E:,*4H, 2" H,<, RH@$Z BD4 &8:`R,>>@< &":, @H$@D" <@V>@FH4 >48H@ >, >"N@*4:Fb & 2@>, D"$@H"`V,(@ &":" @H$@D" <@V>@FH4 4:4 8"D*">>@(@ &":"!
44. %Z8:`R"6H, &": @H$@D" <@V>@FH4 &F,(*", 8@(*" 8"D*">>Z, T"D>4DZ $J*JH 42:4T>, B,D,8@T,>Z 4:4 8@(*" & ,(@ D"$@H, >,H >,@$N@*4<@FH4!

45. ?A!E=?EG[:A@F:, &Z8:`R,>4b &":" @H$@D" <@V>@FH4 4<,,HFb @B"F>@FH\, RH@ D"$@R4, @D(">Z <"T4>Z $J*JH &D"V"H\Fb B@ 4>,DP44. =, B@*N@*4H, $:428@ 8 <"T4>, *@ ,. B@:>@6 @FH">@&84; D"$@HZ B@ JN@*J <@0>@ &ZB@:>bH\ H@:\8@ B@F:, B@:>@6 @FH">@&84!
46. ;,N">42<Z F BD4&@*@< @H &":" @H$@D" <@V>@FH4 4 8"D*">>Z, &":Z R4FHbH, F<"2Z&"`H 4:4 JFH">"&:4&"`H, ,F:4 &": @H$@D" <@V>@FH4 @H8:`R,>, *&4("H,:\ &Z8:`R,> 4 $Z: J*":,> 42 2"<8" 8:`R 2"04(">4b!
47. I8:"*Z&"6H, *,<@>H4D@&">>Z6 8"D*">>Z6 &": & BD,*JF<@HD,>>Z, *:b ^H@(@ <,FH" 8D,B:,>4b >" <"T4>,!
48. ="*&4("6H, 2"V4H>Z6 8@0JN B@F:, @HP,B84 8"D*">>@(@ &":" >" N&@FH@&48 &":" @H$@D" <@V>@FH4!

I7!1!=3+: C"FF,4&"H,:\ H"8 F8@>FHDJ4D@&">, RH@ @> <@0,H B,D,&@24H\ FHD@(@ @BD,*,:,>>Z6 &,F; @> >, BD,*>"2>"R,>, RH@$Z HD">FB@DH4D@&"H\ 42$ZH@R>J` <"FFJ! A@^H@<J <,0*J>"D@*>Z, E+-BD,*B4F">4b 2"BD,V"`H 4FB@:\2@&"H\ D"FF,4&"H,:\ J*@$D,>46 & 8"R,FH&, "&H@B@,2*". ;@>H"0 FP,B>@(@ JFHD@6FH&" BD4&,*,H 8 *,L,8H"< & <"T4>,. Kverneland >, BD4>4<",H >48"8@6 @H&,HFH&,>>@FH4 2" &@2<@0>Z, BD4R4>,>>Z, &F:,*FH&4, ^H@(@ J$ZH84.

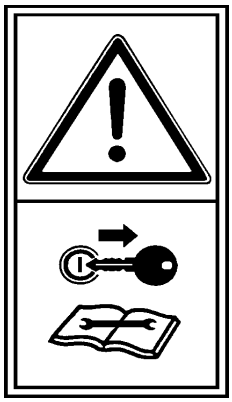

1

2

3

4

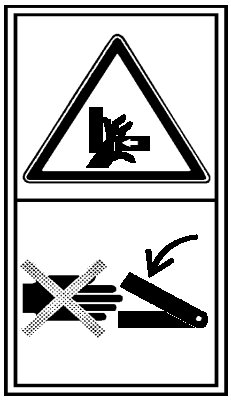

5

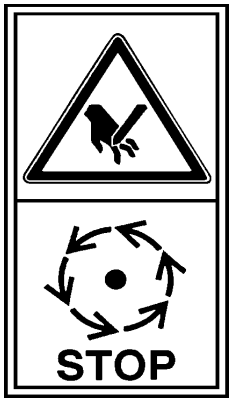

6

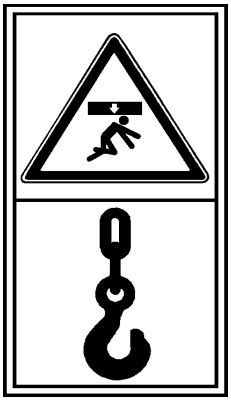

7

A?aE=+=3a 7 =!79+57! ; A? ?A!E=Y ; E3G!!O3a ;

1. **)&4("H,:\ @FH">"&:4&"`H 4 *,:"`H >,&@2<@0>Z< >@&Z6 BJF8 &@ &D,<b D"$@HZ F <"T4>@6.**

G"84< @$D"2@< 42$,("`H @B"F>ZN *:b 042>4 F4HJ"P46, 8@H@DZ, &@2>48"`H, ,F:4 <"T4>" &>,2"B>@ 2"D"$@H",H($J*,H 2"BJV,>").)J<"6H, H"80, @ F:JR"6>@< 4:4 @T4$@R>@< &8:`R,>44, 8@H@D@, <@0,H F:JR4H\Fb BD4 D"$@H"`V,< *&4("H,:, HD"8H@D"!

2. **'4*D@>"&,F>J` F4FH,<J HD"8H@D" BD4 >"&,F8, <"T4>Z >" HD"8H@D @$F:J04&"`H H@:\8@ &>, @B"F>@6 2@>Z!**

G@H, 8H@ >"N@*4HFb <, 0*J HD"8H@D@< 4 <"T4>@6, B@*&,D(",HFb @B"F>@FH4 $ZH\ 2"0"HZ< (4*D@>"&,F8@6 HD"8H@D" . A@^H@<J BD4 >"&,F8, <"T4>Z >" HD"8H@D @$F:J04&"`V46 B,DF@>": *@:0,> >"N@*4H\Fb &>, @B"F>@6 2@>Z!

3. **=,:\2b >"N@*4H\Fb & 2@>, @H84*Z&"`V4NFb *,H":,6 <"T4>Z.**

G"84, *,H":4 <@(JH >,@04*">>@ 4 F $@:\T@6 F4:@6 (42-2" F@$FH&,>>@(@ &,F" 4 (4*D"&:4R,F8@6 F4:Z) *&4("H\Fb &>42. %Z8:`R,>>Z6 *&4("H,:\ >, BD,*@H&D"V",H &F, "&"D44: (4*D"&:48" ,V, <@0,H >"N@*4H\Fb B@* *"&:,>4,< 4 >,:\2b BD4>P4B4":\>@ 4F8:`R4H\ *,6FH&4, F4:Z &,F"!

4. **),D04H, 4>H,D&":: <@(JH @H$D"FZ&"H\Fb 4>@D@*>Z, H,:"!**

AD4 FB,P4":\>@< BD4<,>,>44 <"T4>Z <@(JH @H$D"FZ&"H\Fb 8"<>4 4 B@*@$>Z, BD,*<,HZ. =48@(*" >, >"N@*4H,F\ B@^H@<J & @B"F>@6 2@>,. ?FH@D@0>@FH\ F@$:`*"6H,, BD,0*, &F,(@, BD4 BD4<,>,>44 <"T4>Z &$:424 *@D@( 4 *@<@&! A@F:, &Z8:`R,>4b <"T4>Z 8@D@H8@, &D,<b BD@4FN@*4H 4>,DP4@>>Z6 &Z$,(; *@0*4H,F\ B@:>@6 @FH">@&84 <"T4>Z!

5. **=, N&"H"6H, 2" <,FH", & 8@H@DZN 4<,`HFb 8D,B:,>4b 4 2"04<Z, *@ H,N B@D B@8" H"< @H*,:\>Z, *,H":4 <@(JH B,D,*&4("H\Fb.**

]H" @B"F>@FH\ FJV,FH&J,H, & R"FH>@FH4, BD4 BD4&,*,>44 & *,6FH&4, (4*D@P4:4>*D@&.

6. **=, B@*N@*4H, 8 <"T4>,, *@ H,N B@D B@8" @>" B@:>@FH\` >, @FH">@&4HFb!**

C"$@H"`V"b <"T4>" >48@(*" >, @FH">"&:4&",HFb FD"2J, " BD@*@:0",H *&4("H\Fb ,V, >,8@H@D@, &D,<b. )@H,N B@D B@8" <"T4>" ,V, D"$@H",H, &D"V"`V4,Fb *,H":4 @B"F>Z 4:4 &@@$V, >, &4*>Z. ?FH"&"6H,F\ & FH@D@>, @H <"T4>Z *@H,N B@D, B@8" *,6FH&4H,:\>@ >48"8"b *,H":\$@:\T, >, *&4(",HFb!

7. **A@*>4<"6H, <"T4>J H@:\8@ 2" B@*X,<>Z, BD@JT4>Z!**

+F:4 <"T4>J >,@$N@*4<@ BD4B@*>bH\, H@ F:,*J,H 2"R":4&"H\ ,. H@:\8@ 2" B@*X.<>Z, BD@JT4>Z(B,H:4) & B@*X,<>ZN JT8"N; >, >"N@*4H,F\ B@* 2"R":,>>Z< (DJ2@< (%Z JR4HZ&"6H, H"80, &@2<@0>Z, - 0,:",<Z, 4:4>, 0,:",<Z, - $@8@&Z, *&40,>4b BD4B@*>bH@(@ (DJ2")!

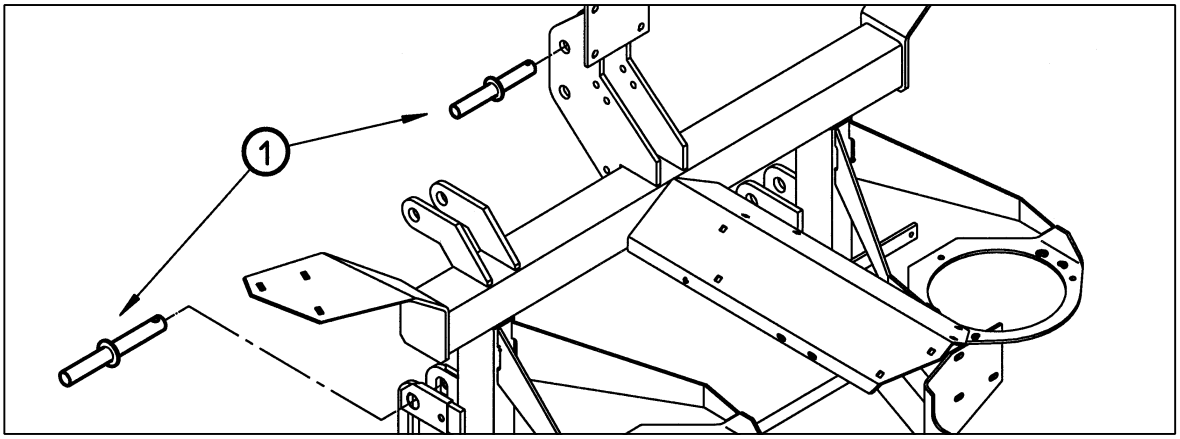

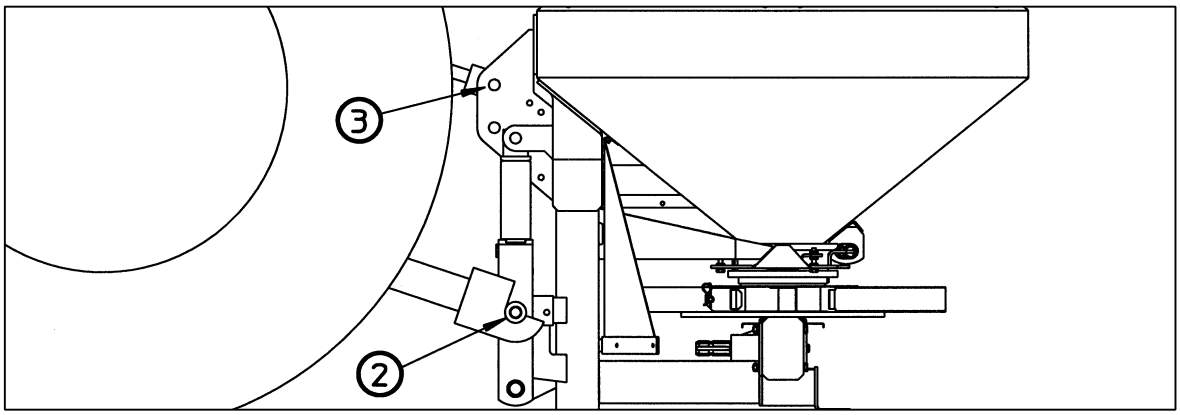

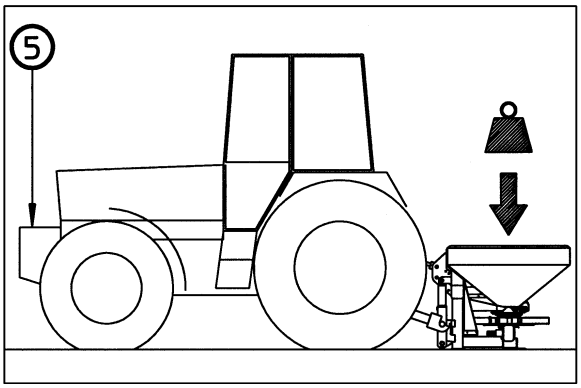

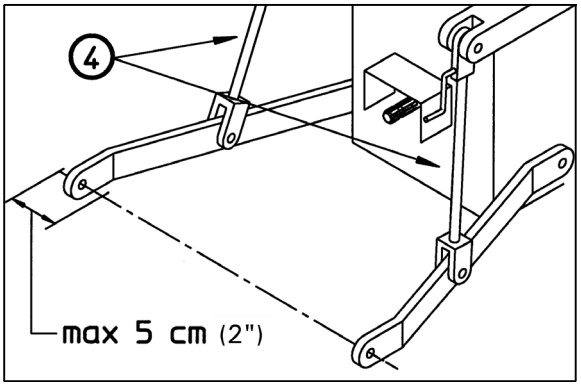

A?)'?G?%7! 7 C!#?G+, C+'!93C?%73, =!EGC?573 3 AC!%39!]7EA9!!G!O33

=!%+E7! =! GC!7G?C

C"FF,4&"H,:\ <4>,D":\>ZN J*@$D,>46 L4D<Z %48@> <@0,H >"&,T4&"H\Fb >,B@FD,*FH&,>>@ >" HD,NH@R,R>J` >"&,F>J` F4FH,<J HD"8H@D".

C"FF,4&"H,:\ *:b >"&,F84 >" >40>4, BD@*@:\>Z, 4 P,>HD":\>J` Hb(J >"&,F84 HD"8H@D" @F>"V.> >"&,F>Z<4 JFHD@6FH&"<4 8"H,(@D44 II 4 F@@H&,HFH&J`V4<4 B":\P"<4(1). G"8 8"8 T"D@&Z, T"D>4DZ (@:@&@8 >"&,F84 &2"4<@2"<,>b,<Z, H@ BD4<,>b6H, &F,(*" T"DZ >,@$N@*4<@6 8"H,(@D44.

- C"FF,4&"H,:\ L48F4DJ`H >" >40>4N BD@*@:\>ZN Hb("N(2).

I7!1!=3+:):b BD,*B@F,&>@(@ &>,F,>4b J*@$D,>46 4 B@*8@D<84 >428@D@F:ZN D"FH,>46 >,@$N@*4<@ 4FB@:\2@&"H\ &,DN>4, BD4F@,*4>4H,:\>Z, H@R84. =40>4, H@R84 BD4F@,*4>,>4b BD,*JF<@HD,>Z *:b B@*8@D<84 & $@:,, B@2*>4, FH"*44 D"2&4H4b D"FH,>46, 8@(*" HD,$J,HFb $@:,, &ZF@8@, D"FB@:@0,>4, <"T4>Z.

- O,>HD":\>J` Hb(J L48F4DJ6H, 8"8 B@8"2">@ >" FN,<,(3).
  3FB@:\2J6H, D"F8@FZ 4:4 @(D">4R4H,:\>Z, P,B4 >"&,F84 HD"8H@D", RH@$Z @(D">4R4&"H\ $@8@&@, D"F8"R4&">4, <"T4>Z(4).

% P,:@< $@8@&@, B,D,<,V,>4, <"T4>Z >" >"&,F8, >, *@:0>@ BD,&ZT"H\ 5 F<.

I7!1!=3+: ?(D">4R4H,:\>Z, P,B4 >, *@:0>Z $ZH\ >"Hb>JHZ H"8, **RH@$Z <,N">42< >"&,F84 $Z: 0,FH84<**.

% 2"&4F4<@FH4 @H H4B" HD"8H@D" <@0,H B@HD,$@&"H\Fb D"2<,FH4H\ &B,D,*4 ,(@ $":"FH>Z6 (DJ2(5). AD,*JF<@HD4H, ^H@ & 8"0*@< F:JR",, B@H@<J RH@ >"B@:>,>>"b J*@$D,>4b<4 ,<8@FH\ $J>8,D" FB@F@$FH&J,H F4:\>@6 D"2(DJ28, B,D,*>,(@ <@FH" HD"8H@D" 4 F@@H&,HFH&,>>@ <@0,H JNJ*T4H\ &<,FH, F H,< ,(@ JBD"&:b,<@FH\.

- ;@>H4DJ6H, 8"D*">>Z6 &": &F,(*" & 8@>P, >"&,F84 <"T4>Z >" HD"8H@D 4 *,<@>H4DJ6H, ,(@ & >"R":, BD4 @HP,B8, D"FF,4&"H,:b.
- 1"8D,B:b6H, *,<@>H4D@&">>Z6 8"D*">>Z6 &": &F,(*" >" BD,*JF<@HD,>>ZN *:b ^H@(@ *,D0"H,:bN.

%=3 ; I=3+: AD4 >"&,F8, <"T4>Z >" HD"8H@D BD4<,>b6H, H@:\8@ @D4(4>":\>Z, BD4F@,*4>4H,:\>Z, 8@<B@>,>HZ >"&,F84 4 B":\PZ F L48F"H@D"<4.

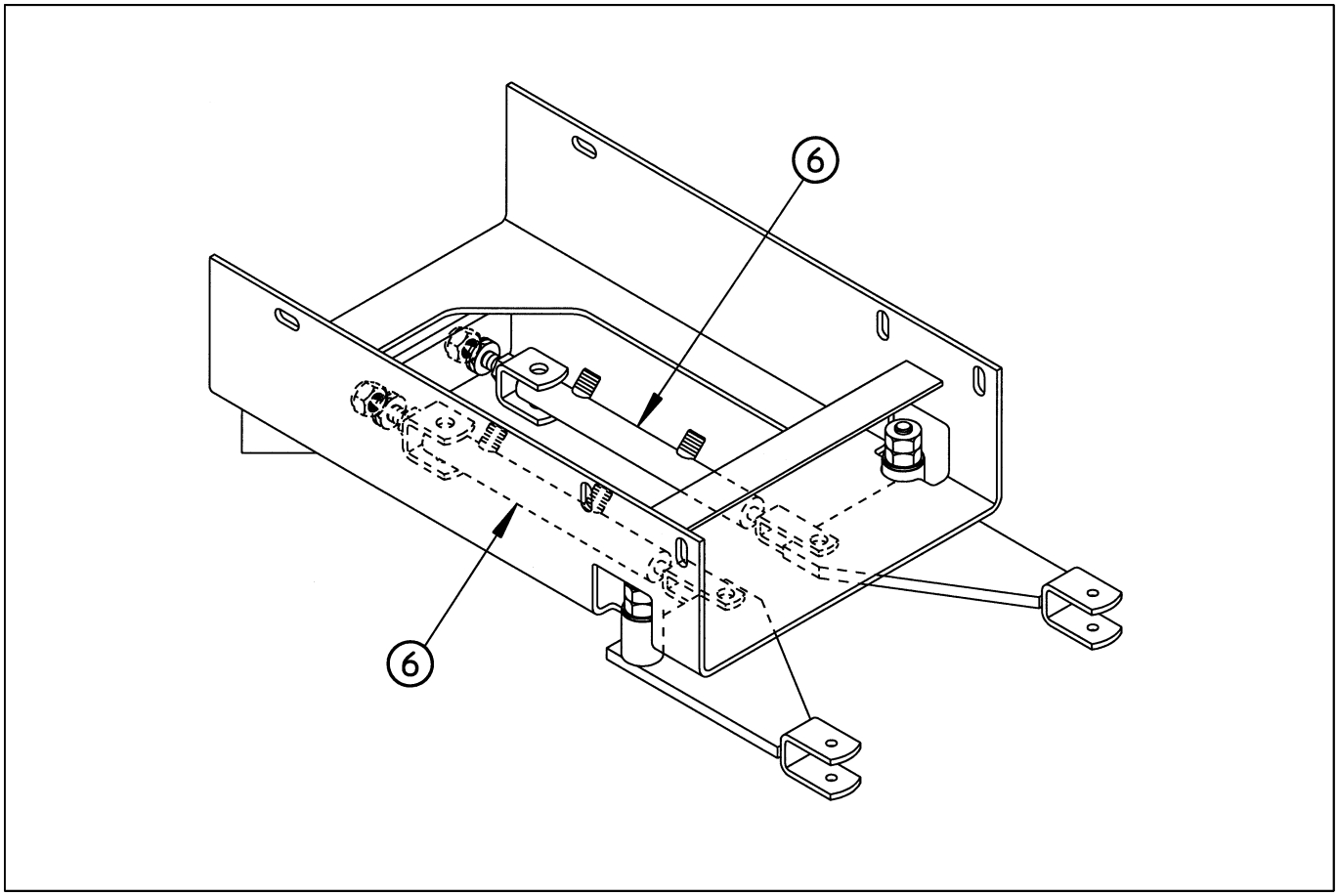

A?)E?+)3=+=3+ 7 '3)C?E3EG+;+

;"T4>" 4<,,H *&" (4*D@P4:4>*D" (6) *:b @H8DZH4b 4 2"8DZH4b @$@4N 2"F:@>@8 *@24DJ`V4N JFHD@6FH&. ):b BD4F@,*4>,>4b ^H4N (4*D@P4:4>*D@& *&@6>@(@ *,6FH&4b BD,*JF<@HD,>Z *&, (4*D"&:4R,F84, <JLHZ. ?$" P4:4>*D" BD4F@,*4>b`HFb H"84< @$D"2@<, RH@$Z @$" P4:4>*D" BD4&@*4:4F\ & *,6FH&4, @*>@&D,<,>>@ @*>@6 DJ8@bH8@6 D"FBD,*,:4H,:b (4*D"&:4R,F8@6 F4FH,<Z HD"8H@D". AD4F@,*4>4H, T:">(4 P4:4>*D@& 8 &,>H4:` (4*D@F4FH,<Z *&@6>@(@ *,6FH&4b HD"8H@D". A@ 0,:">4` B@8JB"H,:b <@0,H $ZH\ B@FH"&:,> *&@6>@6 *&JNN@*@&@6 8D"> *:b D"2*,:\>@(@ JBD"&:,>4b @$@4<4 P4:4>*D"<4

I7!1!=3+: '4*D"&:4R,F8@, @$@DJ*@&">4, B,D,* 8"0*Z< BD4<,>,>4,< *@:0>@ $ZH\ 4FBZH">@ >" B@&D,0*,>4b 4 H,R4.
'4*D"&:4R,F84, T:">(4 B@F:, @HP,B84 <"T4>Z 2"8D,B:b6H, >"
BD,*JF<@HD,>>ZN *:b ^H@(@ 8D,B:,>4bN.

%=3;!=3+: '4*D"&:4R,F84, T:">(4 >48@(*" >, <@(JH B@*&,D("H\Fb D"FHb(4&"`V4< >"(DJ28"<, & H@< R4F:, 4 BD4 <"8F4<":\>@ BD4B@*>bH@< 4:4 <4>4<":\>@ @BJV,>>@< B@:@0,>44 <"T4>Z.):0>@ $ZH\ @$,FB,R,>@, RH@$Z T:">(4 >, <@(:4 8@>H"8H4D@&"H\ F 8@:.F"<4 HD"8H@D" 4:4 *DJ(4<4 B@*&40>Z<4 *,H":b<4.

?A!E=?EG[:AD4 B@*X.<, 4 @BJF8">44 <"T4>Z (4*D@>"&,F8@6 >48H@ >, *@:0,> >"N@*4H\Fb <, 0*J HD"8H@D@< 4 <"T4>@6 42-2" @B"F>@FH4 $ZH\ 2"0"HZ< 4 B@:JR4H\ HD"&<J.

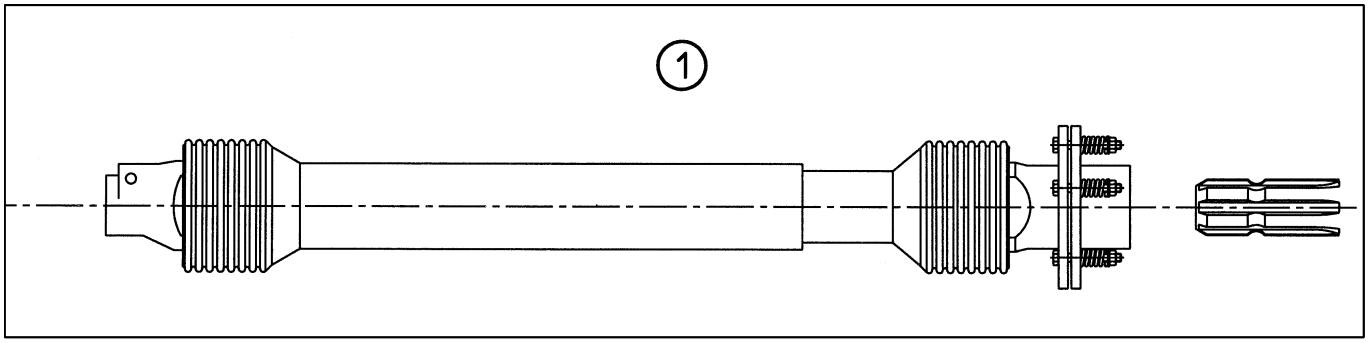

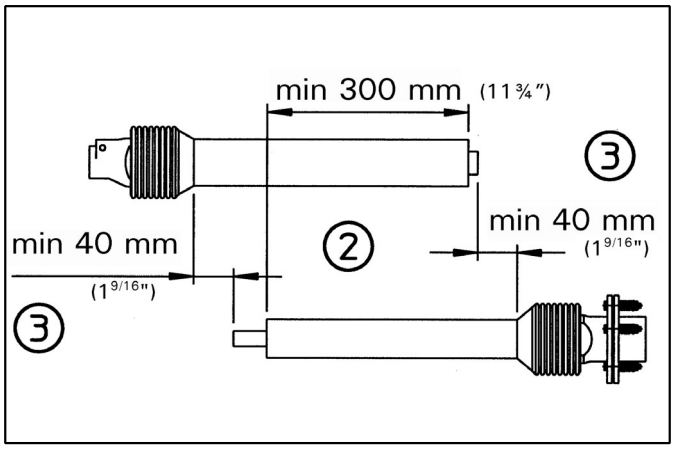

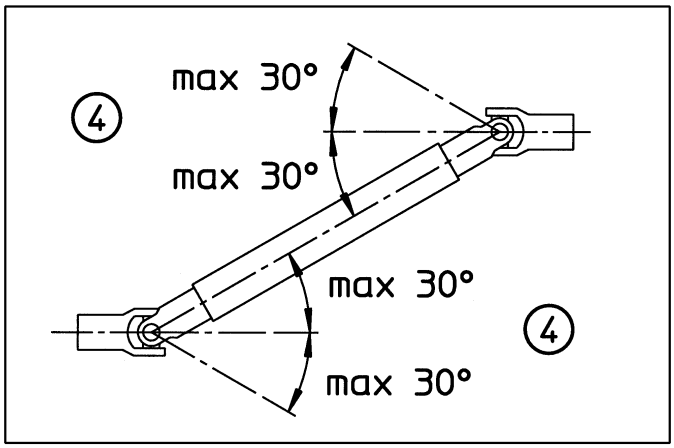

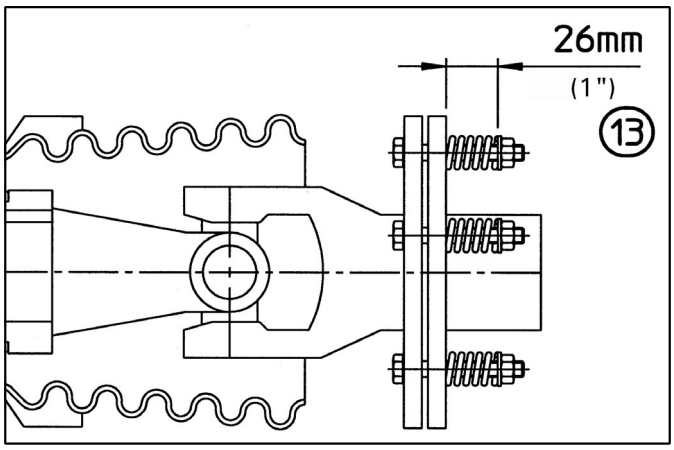

AC3E?+)3=+=3+ 7IC)I==?'?%I9I

-):b @BD,*,:,>4b *:4>Z 8"D*">>@(@ &":" <"T4>" *@:0>" $ZH\ >"&,T,>" >" HD"8H@D.
- AD4&@*>@6 &": <"T4>Z 4 &": @H$@D" <@V>@FH4 HD"8H@D" >,@$N@*4<@ D"2<,FH4H\ F@@F>@ (1)," F@FH"&>Z, R"FH4 H,:,F8@B4R,F8@(@ 8"D*">>@(@ &":" B@:@04H\ B"D"::,:\>@ Db*@<, >, &*&4("b H,:,F8@B4R,F8J` R"FH\ & HDJ$J(2). AD4 ^H@< BD,*@ND">4H,:\>"b <JLH" *@:0>" >"N@*4H\Fb F@ FH@D@>Z <"T4>Z.
- AD@&,D\H, H,B,D\ *:4>J &":" (3): HDJ$Z H,:,F8@B4R,F8@(@ F@,*4>,>4b *@:0>Z B,D,8DZ&"H\ *DJ(*DJ(" B@ &@2<@0>@FH4 8"8 <@0>@ $@:\T,, @$,FB,R4&"b BD4 ^H@< <4>4<":\>Z6 2"2@D B@ 8@>P"< & 40 <<. A,D,8DZH4, HDJ$ 2"V4H>@(@ 8@0JN" @(D"0*,>4b *@:0>@ F@FH"&:bH\ 8"8 <4>4<J< 300 <<!

%=3;I=3+: I(@:BD,:@<:,>4b & T"D>4D"N D"$@H"`V,(@ 8"D*">>@(@ &":" (9) >, <@0,H BD,&ZT"H\ 30 (D"*JF@& (B@:@0,>4, FHD,:84 R"F@& 10 B@F:, 9). A@^H@<J BD4 <"8F4<":\>@< B@*X.<, 4:4 @BJF8">44 <"T4>Z &F,(*" >J0>@ &Z8:`R"H\ &": @H$@D" <@V>@FH4.

I7?CIQ3%I=3+ 7IC)I==?'?%I9I

CJ8@&@*FH&J6H,F\ BD4 &ZB@:>,>44 ^H@6 BD@P,*JDZ &F,<4 @H>@FbV4<4Fb 8>,6 J8"2">4b<4.

7?=GC?9[AC+)?MCI=3G+9[=?5 ;IKGY

=,8@H@DZ, HD"8H@DZ 4<,`H H@D<@2>Z, F4FH,<Z &":" @H$@D" <@V>@FH4, 8@H@DZ, D,28@ H@D<@2bH, 4:4 @$@DJ*@&">Z (4*D"&:4R,F84< BD4&@*@< &":" @H$@D" <@V>@FH4. A@^H@<J F,D46>Z6 8"D*">>Z6 &": @F>"V.> BD,*@ND">4H,:\>@6 BD@F8":\2Z&"`V,6 <JLH@6. C,(J:bD>@ 4 HV"H,:\>@ 4FBZHZ&"6H, & >"R":, F,2@>" &>,F,>4b J*@$D,>46 LJ>8P4` 4 D"$@H@FB@F@$>@FH\ BD,*@ND">4H,:\>@6 <JLHZ 8"D*">>@(@ &":". 32-2" &@2*,6FH&4b &@*Z 4 <4>,D":\>ZN J*@$D,>46 $ZFHD@ <@0,H B@b&4H\Fb 8@DD@24b, &F:,*FH&4, R,(@ BD,*@ND">4H,:\>"b <JLH" <@0,H &Z6H4 F@ FHD@b. ):b BD@&,D84 D"$@H@FB@F@$>@FH4 <JLHZ %Z >J0*",H,F\ & *4>"<@<,HD4R,F8@< 8:`R, 8DJHbV,(@ <@<,>H", 8@H@DZ6 JFH">@&:,> >" 400 =< (40 8(.<). AD4 ^H@< 2>"R,>44 FH"H4R,F8@(@ 8DJHbV,(@ <@<,>H" <JLH" *@:0>" BD@F8":\2Z&"H\. AD4 ^H@< *:4>" BDJ04> BD,*@ND">4H,:\>@6 <JLHZ *@:0>" F@FH"&:bH\ 26 << (13).

%=3;I=3+: 7"D*">>Z6 &": B,D,* 8"0*Z< BD4<,>,>4,< >"*@ BD@&,DbH\ >" >":4R4, B@&D,0*,>46, <48D@HD,V4> 4 H@<J B@*@$>@,.

%=3;I=3+: +F:4 %Z >, &:"*,,H, >,@$N@*4<Z< 4>FHDJ<,>H@< *:b &ZB@:>,>4b &ZT,JB@<b>JH@(@ 8@>HD@:b, H@ @$D"H4H,F\ 8 %"T,<J FB,P4":424D@&">>@<J H@D(@&@<J B"DH>,DJ. #,2JBD,R>@, LJ>8P4@>4D@&">4, BD,*@ND">4H,:\>@6 <JLHZ 8D"6>, &"0>@ *:b %"T,6 <"T4>Z!

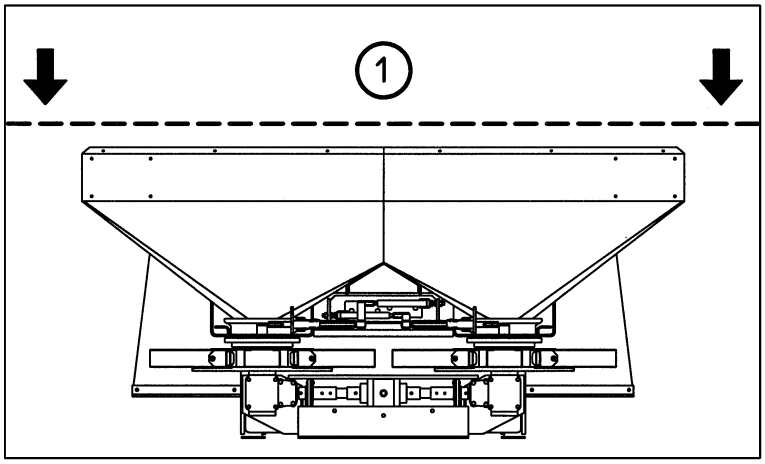

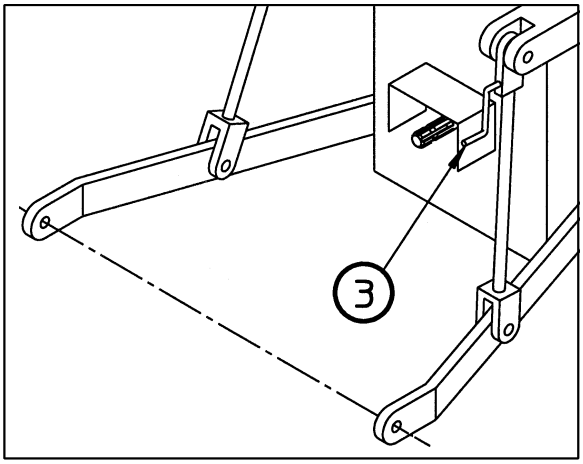

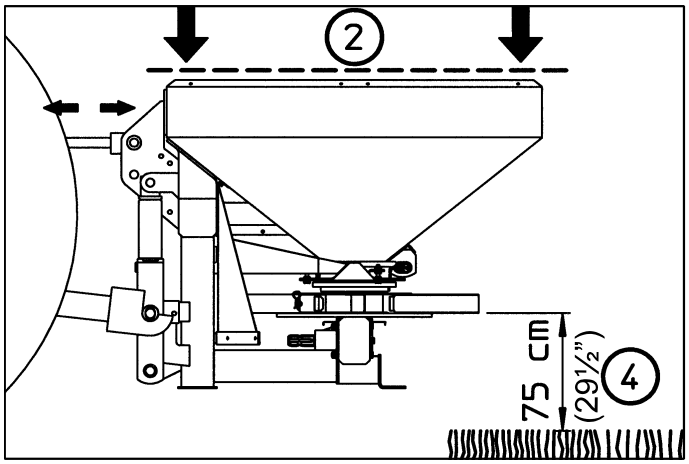

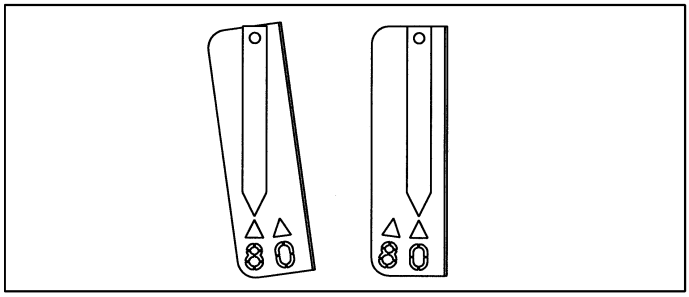

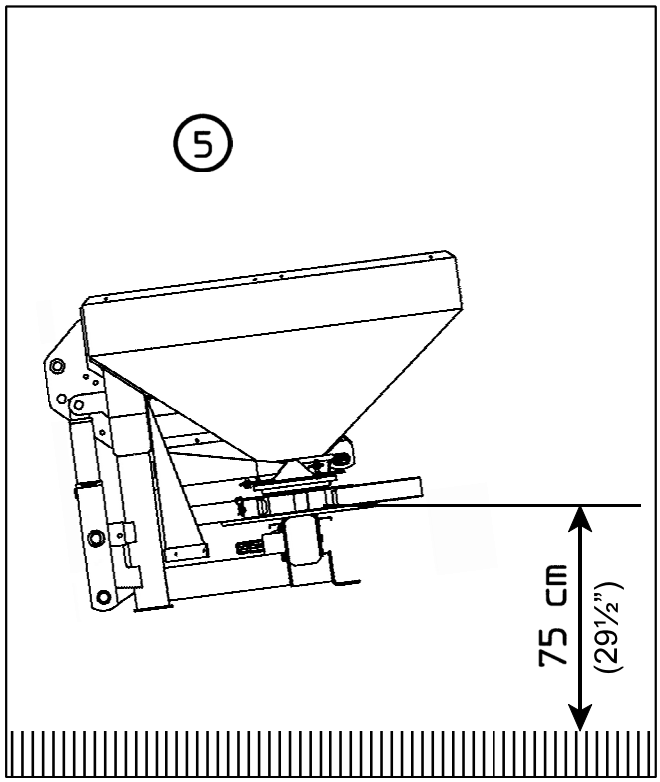

'?C31?=G!9[=!a !EG!=?%7!

):b *@FH40,>4b $,2JBD,R>@6 8"DH4>Z D"FBD,*,:,>4b J*@$D,>46 <"T4>J >,@$N@*4<@ JFH">"&:4&"H\ (@D42@>H":\>@ (1) F>"R":" & B@B,D,R>@< >"BD"&:,>44 (BD4 D"FF<"HD4&">44 F2"*4) 4 B@F:, ^H@(@ & BD@*@:\>@< >"BD"&:,>44 (2). (A,D,* D,(J:4D@&8@6 BD@&,D\H, @*4>"8@&@FH\ *"&:,>46 & T4>"N :,&ZN 4 BD"&ZN 8@:.F)

- **!FH">@&4H, @$, BD@*@:\>Z, Hb(4 >"&,F>@6 F4FH,<Z %"T,(@ HD"8H@D" F B@<@V\` D,(J:4D@&">4b D"F8@F@& B@ &ZF@H, >" D"&>J` &ZF@HJ (3).**
- **E B@<@V\` (4*D@P4:4>*D" @BJFH4H, <"T4>J *@ H,N B@D, B@8" &ZF@H" D"FB@:@0,>4b @F>@&">4b D"FF,4&"` V,(@ *4F8" D"FF,4&"H,:b >"* B@&,DN>@FH\` D,(J:4D@&@R>@6 B:@V"*84 F@FH"&4H 75 F< (4).**
- **!FH">@&4H, F B@<@V\` P,>HD":\>@6 Hb(4 >"&,F>@(@ JFHD@6FH&" (@D42@>H":\>@, B@:@0,>4, 8D@<84 $J>8,D" <"T4>Z (2). ?$D"H4H, &>4<">4,, RH@ BD4 ^H@< &ZF@H" D"FF,4&"` V4N *4F8@& <@0,H 42<,>4H\Fb.**
- **AD@8@>HD@:4DJ6H, ^HJ D,(J:4D@&8J ,V, D"2 BD4 >"B@:>,>>@< J*@$D,>4b<4 $J>8,D, <"T4>Z, H"8 8"8 HD"8H@D BD4 B@:>@6 2"(DJ28, D"FF,4&"H,:b <@0,H >,@*4>"8@&@ B@(DJ0"H\Fb & B@R&J.**

!7!1!=3+: **):b J&,:4R,>4b D"$@R,6 T4D4>Z &>,F,>4b J*@$D,>46 4 B@*8@D<84 &ZF@84N D"FH,>46 <"T4>J F:,*J,H 4>@(*" >"8:@>bH\ &@8DJ((@D42@>H":\>@6 @F4 *@ 8 ° &B,D,*. =,@$N@*4<@FH\ & ^H@< @HD"0,>" & D,(J:4D@&@R>@6 H"$:4P, (5).**

C+'!93C?%73 A+C+) %=+E+=3+; !)?#C+=35

):b *@FH40,>4b BD"&4:\>@6 D,(J:4D@&84 D"FF,4&"H,:b >,@$N@*4<@ JFH">@&4H\ F:,*J`V4, B"D"<,HDZ:

- **&Z$@D F@@H&,HFH&J`V,6 D,(J:4D@&@R>@6 H"$:4PZ**
- ***@2J &>,F,>4b >" (,8H"D**
- **D"$@RJ` T4D4>J &>,F,>4b**
- **F8@D@FH\ *&40,>4b "(D,("H"**

E B@<@V\` H,HD"*4 F D,(J:4D@&@R>Z<4 H"$:4P"<4 %Z <@0,H, >"FHD@4H\ <"T4>J.):b &Z$@D" BD"&4:\>@6 D,(J:4D@&84 &"0>@ &>4<"H,:\>@ BD@R4H"H\ BD,*4F:@&4, 8 D,(J:4D@&@R>Z< H"$:4P"<.

!7!1!=3+:
AD,*FH"&:,>>Z, & D,(J:4D@&@R>ZN H"$:4P"N 2>"R,>4b *@2 &>,F,>4b <@(JH @H:4R"H\Fb @H L"8H4R,F84N, H"8 8"8 8"0*Z6 D"2 <@(JH D"2:4R"H\Fb &4* J*@$D,>46 4 JF:@&4b 4N BD4<,>,>4b. 7"R,FH&@ B@FH"&:,>>ZN J*@$D,>46 (J*,:\>Z6 &,F 4 D"FBD,*,:,>4, D"2<,D" (D">J:) *@:0>Z &F,(*" 8@>HD@:4D@&"H\Fb; & 2"&4F4<@FH4 @H 2"L48F4D@&">>ZN 2>"R,>46 &Z$4D",HFb F@@H&,HFH&J`V"b D,(J:4D@&@R>"b H"$:4P".

!7!1!=3+: **):b BD@&,D84 8@DD,8H>@FH4 >"FHD@684 &F,(*" >,@$N@*4<@ &ZB@:>bH\ BD@$>@, &>,F,>4, (F<@HD4 H, "AD@$>J` >"FHD@68J").**

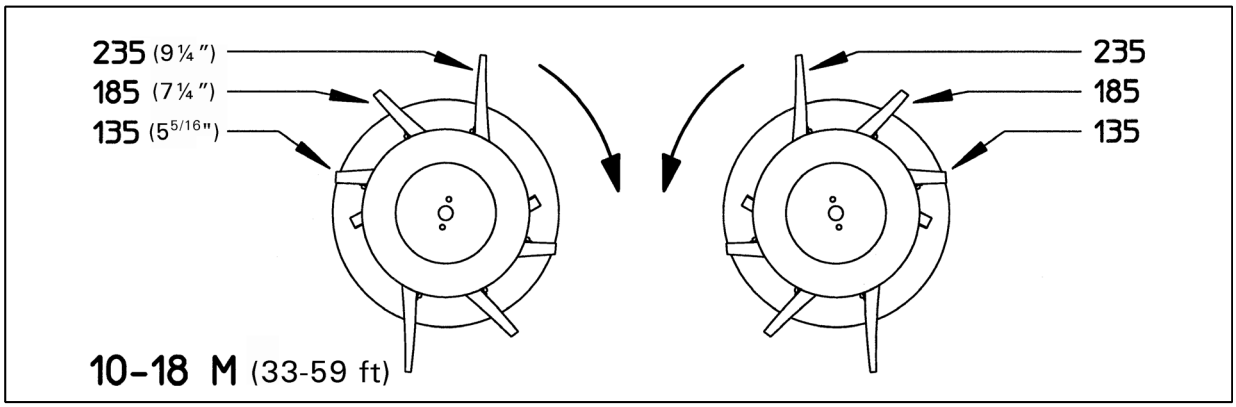

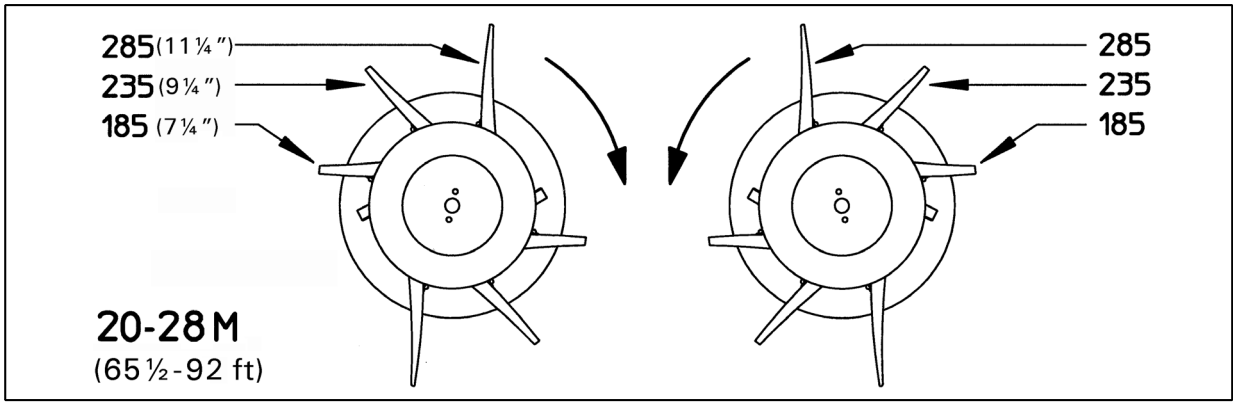

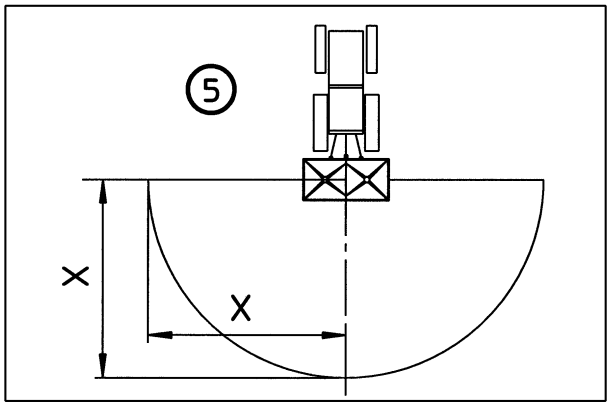

C!#?Q!a S3C3=! %=+E+=3a

C"$@RJ` T4D4>J &>,F,>4b J*@$D,>46 D,(J:4DJ`H B@F:, JFH">@&84 :@B"H@8 >" D"FF,4&"`V4, *4F84. 7 <"T4>, 8 8"0*@<J D"FF,4&"`V,<J *4F8J BD4:"(" `HFb B@ R,HZD, H4B" :@B"H@8 *:4>@6 135, 185, 235 4 285 <<.

% >40,D"FB@:@0,>>@6 H"$:4P, BD4&,*,>Z &@2<@0>Z, 8@<$4>"P44 *:4> :@B"H@8 *:b @$,FB,R,>4b 0,:",<@6 D"$@R,6 T4D4>Z &>,F,>4b.

C"$@R"b T4D4>" (<)	7@<$4>"P4b :@B"H@8 *:4>@6 (<<)
10 - 18	135 - 185 - 235
20 - 28	185 - 235 - 285

=" F:,*J`V,6 FHD">4P, F<@HD4H, B@F:,*@&"H,:\>@FH\ D"2<,V,>4b D"FF,4&"`V4N :@B"H@8.

!7!1!=3+:
=,@$N@*4<"b R"FH@H" &D"V,>4b &":" @H$@D" <@V>@FH4 &F,(*" *@:0>" F@FH"&:bH\ 540 @$. / <4>.

%=3;!=3+:
32 &Z$D">>@6 D"$@R,6 T4D4>Z &>,F,>4b (X) H"80, F:,*J,H, 8"8 *":,8@ <4>,D":\>Z, J*@$D,>4b $J*JH D"2$D"FZ&"H\Fb >":,&@, >"BD"&@ 4 >"2"* (5).

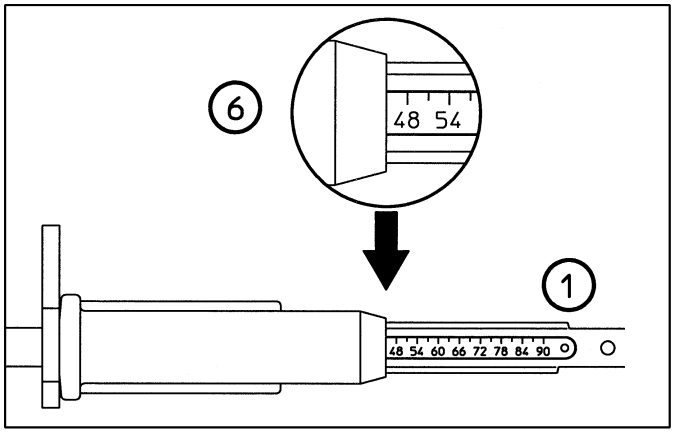

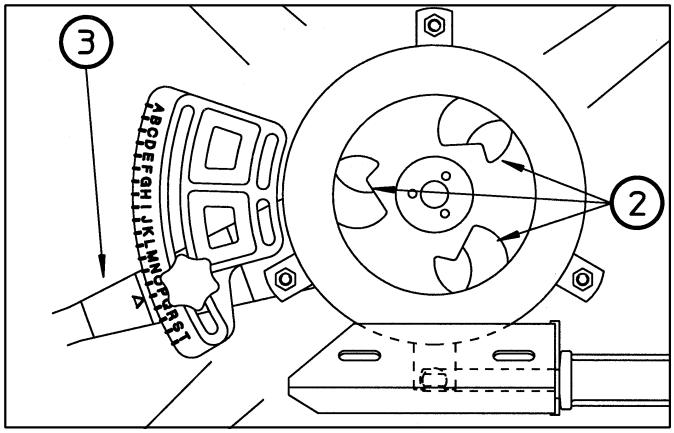

NPK 17-17-17	ФРАКЦИОННЫЙ СОСТАВ			
	< 2	2-3,3	3,3-4,75	>4,75
	10%	70%	18%	2%
	НАСЫПНАЯ ПЛОТНОСТЬ	1,07 KG/L		

РАБОЧАЯ ШИРИНА ВНЕСЕНИЯ	18 МЕТРОВ	ЛОПАТКИ	135 / 185 / 235

КОЛИЧЕСТВО	ОТВЕРСТИЕ ВЫПУСКНОЕ	КГ/МИН	СКОРОСТЬ km/h; 6	km/h; 8	km/h; 10	km/h; 12	km/h; 14
			ДОЗА КГ/ГА				
18	P	12	67	50	40	33	29
21	P	17	96	72	58	48	41
24	P	23	126	94	76	63	54
27	P	28	156	117	93	78	67
30	P	33	185	139	111	93	79
33	P	39	215	161	129	107	92
36	P	44	244	183	147	122	105
39	P	54	297	223	178	149	127
42	P	63	350	263	210	175	150
45	P	73	403	302	242	201	173
48	N	82	456	342	273	228	195

5

C+'I93C?%7I)?1Y %=+E+=3a I)?#C+=35 3 %YM?)=?'? ?G%+CEG3a GI7?=IACI%3G+9a

E @$D"H>@6 FH@D@>Z <"T4>Z >"N@*bHFb *&, D,(J:4D@&@R>Z, TH">(4 (1), F B@<@V\` 8@H@DZN JFH">"&:4&",HFb <"FF" *@24DJ,<ZN J*@$D,>46. 7"0*"b TH">(" 4<,,H <"FTH"$>J` T8":J @H 0 *@ 90. ; "FF" J*@$D,>46 D,(J:4DJ,HFb @H8DZH4,< 2"F:@>8@6 HD,N @H&,DFH46 & *@24DJ`V,< *4F8, (2), D"2<,D 8@H@DZN JFH">"&:4&"`H B,D,<,V,>4,< D,(J:4D@&@R>@6 TH">(4 F L48F4DJ`V,6 ("68@6. =" :,&@6 4 BD"&@6 FH@D@>, <"T4>Z <@0>@ DZR"(@< (3) JFH">"&:4&"H\ 2"*">>J` B@24P4` B@*"R4 <4>,D":\>ZN J*@$D,>46 >" D"FF,4&"`V4, *4F84 BJH.< 42<,>,>4b B@:@0,>4b &ZN@*>@(@ @H&,DFH4b HJ8@>"BD"&4H,:b. =,@$N@*4<"b B@24P4b DZR"(" @BD,*,:b,HFb &4*@< J*@$D,>46, T4D4>@6 &>,F,>4b 4 *@2@6 &>,F,>4b J*@$D,>46 & 8(/ <4>.

E B@<@V\` D,(J:4D@&@R>ZN H"$:4P <@0>@ JFH">@&4H\ HD,$J,<J` *@2J &>,F,>4b J*@$D,>46.C"FF<@HD4< BD4<,D:

)@BJFH4<, RH@ %Z N@H4H, D"FF,bH\ NPK 17-17-17 BD4 F:,*J`V4N JF:@&4bN:

- 2"*">>"b *@2" &>,F,>4b 300 8(>" (,8H"D
- D"$@R"b T4D4>" &>,F,>4b 18 <
- F8@D@FH\ "(D,("H" 8 8</R.
- 3V4H, & D,(J:4D@&@R>@6 H"$:4P, &>,F,>4b 2>"R,>4b *:b (D">J:4D@&">>ZN NPK-17-17-17 BD4 D"$@R,6 T4D4>, &>,F,>4b 18 < (4).
- % FH@:$P, 8-8</R %Z 4V,H, H,B,D\ 0,:",<J` *@2J & 300 8( / (": >" :,&@6 FH@D@>, H"$:4PZ <@0>@ J&4*,H\, RH@ T8":" D,(J:4D@&@R>@6 TH">(4 *@:0>" $ZH\ JFH">@&:,>" >" B@24P4` 45 (5). 1*,F\ BD,*FH"&:,>" H"80, BD@BJF8>"b FB@F@$>@FH\ & 8(& <4>JHJ, 8@H@D"b HD,$J,HFb BD4 0,:",<@6 *@2, &>,F,>4b J*@$D,>46.
- =" D,(J:4D@&@R>@6 TH">(, JFH">"&:4&",< B@24P4` 45 (6).

I7I1I=3+:

IFH">@&:,>>@, B@:@0,>4, >"FHD@684 >" *@2J &>,F,>4b &F,(*" *@:0>@ BD@&,DbH\Fb BD@$>@6 >"FHD@68@6. =" FHD">4P, 17 ^H@H BD@P,FF @B4FZ&",HFb.

):b B@:JR,>4b <":ZN *@2 &>,F,>4b F,<b>, BD@HD"&:,>>@(@ 2,D>" *:b J:4H@8 4:4 <":ZN *@2 *DJ(4N <"H,D4":@& D,8@<,>*J,HFb BD4<,>bH\ F@@H&,HFH&J`V46 8@<B:,8H @$@DJ*@&">4b *:b *@24D@&">4b <":ZN >@D< (F<@HD4H, FHD">4PJ 16).

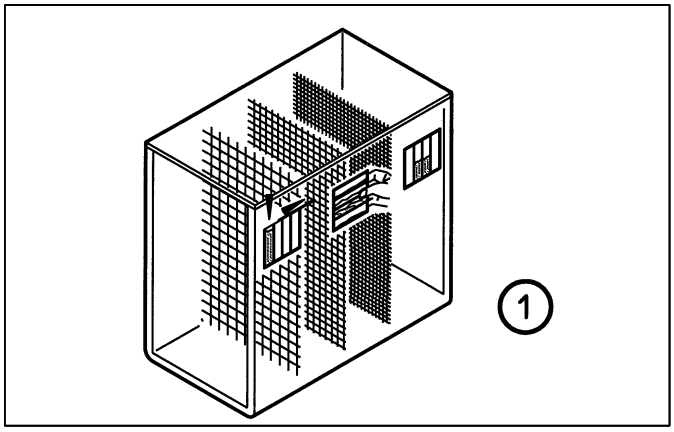

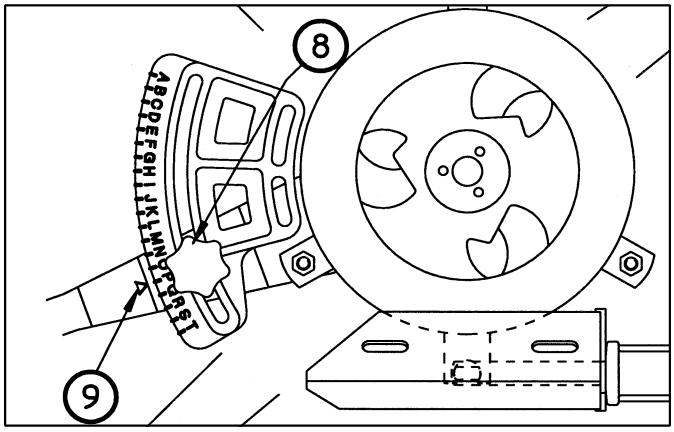

NPK 17-17-17	ФРАКЦИОННЫЙ СОСТАВ			
	< 2	2-3,3	3,3-4,75	>4,75
	10%	70%	18%	2%
	НАСЫПНАЯ ПЛОТНОСТЬ		1,07 KG/L	

РАБОЧАЯ ШИРИНА ВНЕСЕНИЯ	18 МЕТРОВ	ЛОПАТКИ	135 / 185 / 235

КОЛИЧЕСТВО	7 ОТВЕРСТИЕ ВЫПУСКНОЕ	КГ/МИН	СКОРОСТЬ km/h; 6	km/h; 8	km/h; 10	km/h; 12	km/h; 14
			ДОЗА КГ/ГА				
18	P	12	67	50	40	33	29
21	P	17	96	72	58	48	41
24	P	23	126	94	76	63	54
27	P	28	156	117	93	78	67
30	P	33	185	139	111	93	79
33	P	39	215	161	129	107	92
36	P	44	244	183	147	122	105
39	P	54	297	223	178	149	127
42	P	63	350	263	210	175	150
45	P 10	73	403	302	242	201	173
48	N	82	456	342	273	228	195

%=3 ; I=3+:
7"0*"b *@24DJ`V"b 2"F:@>8" *@24DJ`V,(@ JFHD@6FH&" @F>"V,>" D,(J:4D@&@R>@6 TH">(@6 F@ T8":@6. SH">(4 <@(JH @*>@&D,<,>>@ B,D,<,V"H\Fb (4*D"&:48@6, " 4N N@* @(D">4R,> JB@D@<. QH@$Z @$,FB,R4H\ @*4>"8@&J` >@D<J &Z*"R4 J*@$D,>46 BD"&Z< 4 :,&Z< *@24DJ`V4<4 JFHD@6FH&"<4, @$, D,(J:4D@&@R>Z, TH">(4 *@:0>Z $ZH\ JFH">@&:,>Z >" @*>4 4 H, 0, 2>"R,>4b T8":Z.

AD"&4:\>J` B@24P4` @H&,DFH4b &ZN@*" J*@$D,>46 <@0>@ FR4HZ&"H\ &@ &H@D@< FH@:$P, D,(J:4D@&@R>@6 H"$:4PZ (7) F:,*J`V4< @$D"2@<:

- CJR8J L48F"H@D" (8) >,@$N@*4<@ @F:"$4H\ 4 B,D,<,FH4H\ B@ F,8H@DJ D,(J:4D@&@R>Z6 DZR"(JFH">@&84 B@24P44 &ZN@*>@(@ @H&,DFH4b HJ8@>"BD"&4H,:b H"84< @$D"2@<, RH@$Z J8"2"H,:\ (9) >"N@*4:Fb H@R>@ BD@H4& @$@2>"R,>4b $J8&Z, J8"2">>@6 & D,(J:4D@&@R>@6 H"$:4P,: P (10).
- 1"H,< >"*@ N@D@T@ 2"8D,B4H\ DZR"(L48F"H@D@<.

%=3 ; I=3+:
QH@$Z D,2J:\H"HZ D"$@HZ D"FF,4&"H,:b $Z:4 B@FH@b>>@ N@D@T4<4, D,(J:4D@&@R>Z, DZR"(4 *@24DJ`V,(@ JFHD@6FH&" *@:0>Z F@ND">bH\Fb & @*4>"8@&@6 B@24P44.

%=3 ; I=3+:
?F@$,>>@ HV"H,:\>@ >,@$N@*4<@ 8@>HD@:4D@&"H\ N"D"8H,D4FH48J D"FBD,*,:,>4b J*@$D,>46 BD4 >"FHD@68, D"FF,4&"H,:b >" $@:\TJ` D"$@RJ` T4D4>J &>,F,>4b. 7"DH4>J D"FBD,*,:,>4b <@0>@ 8@>HD@:4D@&"H\ B@:\2@&"H,:` F"<@<J F B@<@V\` «H,FH" 8@:4R,FH&" D"FF,4&",<ZN J*@$D,>46» (F<. ?$@DJ*@&">4, *@B@:>4H,:\>@,, F.29) G"80, ^H@H H,FH *:b %"F <@(JH BD@&@*4H\ @L4P4":\>@ *@BJV,>>Z, 4FBZH"H,:\>Z, @D(">42"P44.

I7I1I=3+:
% BD,*4F:@&44 8 D,(J:4D@&@R>Z< H"$:4P"< JB@<4>"`HFb ,V, >,F8@:\8@ B@:,2>ZN J8"2">46 @ <,H@*"N 42<,D,>4b LD"8P4@>>@(@ F@FH"&" J*@$D,>46 (1) 4 4N >"FZB>@6 B:@H>@FH4.

%=3 ; I=3+:
CJR8J L48F"H@D" (8) D,(J:4D@&@R>@(@ DZR"(" B@ <,>\T,6 <,D, D"2 & (@* >,@$N@*4<@ *,<@>H4D@&"H\ 4 ,. D,2\$J B@->@&@<J F<"2Z&"H\ 04D@&@6 F<"28@6.

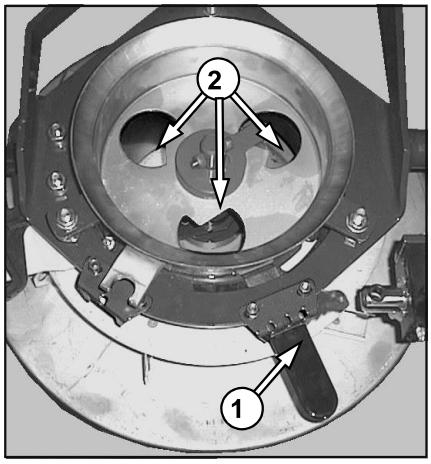

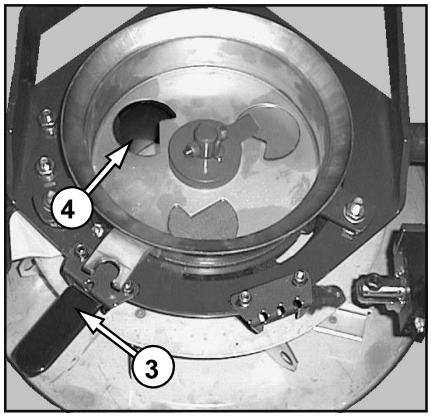

NPK	ФРАКЦИОННЫЙ СОСТАВ			
	< 2	2-3,3	3,3-4,75	>4,75
	0 %	20 %	80 %	0 %
	НАСЫПНАЯ ПЛОТНОСТЬ		KG/L 0,96	

РАБОЧАЯ ШИРИНА ВНЕСЕНИЯ	18 МЕТРОВ	ЛОПАТКИ	135 / 185 / 235

КОЛИЧЕСТВО	ОТВЕРСТИЕ ВЫПУСКНОЕ	КГ/МИН	СКОРОСТЬ km/h; 6	km/h; 8	km/h; 10	km/h; 12	km/h; 14
			ДОЗА КГ/ГА				
18	O	13	72	54	43	36	31
21	O	18	102	76	61	51	44
24	O	24	131	99	79	66	56
27	O	29	161	121	97	81	69
30	O	34	191	143	114	95	82
33	O	40	220	165	132	110	94
36	O	45	250	188	150	125	107
39	O	54	299	224	179	150	128
42	O	63	348	261	209	174	149
45	O	72	397	298	238	199	170
48	O	80	446	335	268	223	191
51	O	89	495	372	297	248	212
54	O	98	544	408	327	272	233
57	M	110	610	458	366	305	262
60	M	122	676	507	406	338	290
63	M	134	742	556	445	371	318
66	M	145	807	606	484	404	346
69	M	157	873	655	524	437	374
72	M	169	939	704	563	469	402

C I # ? G I E 7 ? ; A 9 + 7 G ? ;) 9 a
I E G I = ? % 7 3 % = + E + = 3 a ; I 9 Y M) ? 1

AD4 D"$@H, F 8@<B:,8H@< *:b &>,F,>4b <":ZN *@2 *&" 42 HD.N @H&,DFH46 *@24DJ`V,(@ JFHD@6FH&" B,D,8DZ&"`HFb, RH@ B@2&@:b,H H@R>@ 4 $,2 BD@$:,< D"FBD,*,:bH\ D"FF,4&",<Z6 <"H,D4": F <4>4<":\>@6 BD@BJF8>@6 FB@F@$>@FH\` (& 8(/ <4>). G"84< FB@F@$@< <@(JH D"FBD,*,:bH\Fb:

- B@F,&>@, 2,D>@ 4:4 2,D>@ *:b J:4H@8
- >4284, >@D<Z J*@$D,>46 (BD@BJF8>"b FB@F@$>@FH\ <,>,, 50 8(/ <4>)
- &4*Z J*@$D,>46 J<,D,>>@(@ 8"R,FH&" 4:4 F &ZF@84< F@*,D0">4,< "2@H", <"(>4b 4:4 SO_3

):b >@D<":\>@(@ &ZBJF8" <4>,D":\>ZN J*@$D,>46 R,D,2 &F, HD4 *@24DJ`V4N @H&,DFH4b DZR"( JFH">"&:4&",HFb & B@:@0,>4, BD@H4& HD,H\,6 BD@D,24 >" 8D"` F,8H@D" *,D0"H,:b (1). % ^H@< B@:@0,>44, ,F:4 JFH">@&:,>" <"8F4<":\>@ &@2<@0>"b *@2" &>,F,>4b, &F, @H&,DFH4b *@24DJ`V,(@ *4F8" (2) B@:>@FH\` @H8DZHZ.

+F:4 4FB@:\2J,HFb 8@<B:,8H &>,F,>4b <":ZN *@2, H@ DZR"(@H8DZH4b @H&,DFH46 *@24DJ`V,(@ *4F8" JFH">"&:4&"`H & L48F"H@D & B@:@0,>44, 8@H@D@, @$@2>"R,>@ H@:\8@ @*>@6 BD@D,2\` >" F,8H@D, (3). G"8 8"8 & H"8@< B@:@0,>44 4FB@:\2J,HFb H@:\8@ @*>@ *@24DJ`V,, @H&,DFH4, (4).H@ *@:0>" F@@H&,HFH&,>>@ J<,>\T"H\Fb & HD4 D"2" *@2" &>,F,>4b & D"FR.H, >" (,8H"D (5).

)@2J &>,F,>4b BD4 4FB@:\2@&">44 8@<B:,8H" &>,F,>4b <":ZN *@2 JFH">"&:4&"6H, H"8::

- %Z$,D4H, >,@$N@*4<J` D,(J:4D@&@R>J` H"$:4PJ. E<@HD4H, 8D@<, H@(@ J8"2">4b & H"$:4P"N >"FHD@684.
- 1"*">>J` *@2J &>,F,>4b J<>@0\H, >" HD4 (5), @H>@FbV,,Fb 8 ^H@6 *@2, 2>"R,>4, B@:@0,>4b D,(J:4D@&@R>@6 TH">(4 (6) FR4HZ&"6H, F H"$:4PZ 4 JFH">@&4H, TH">(J & H"8@< B@:@0,>44.
- AD@&,*4H, BD@$>J` >"FHD@68J F@(:"F>@ @B4F">4` & DJ8@&@*FH&, B@ ^8FB:J"H"P44. (EHD">4P" 17)
- %Z$,D4H, @H>@FbVJ`Fb 8 ^H@6 *@2, (& 8( / <4>) B@24P4` $J8&Z (7) *:b >"FHD@684 D,(J:4D@&@R>@(@ DZR"(" B@:@0,>4b @H&,DFH4b HJ8@>"BD"&4H,:b.

AD4<,D:

%4* J*@$D,>46	>4HD"H "<<@>4b
C"$@R"b T4D4>" &>,F,>4b	18 <
)@2" &>,F,>4b	150 8(/ ("
E8@D@FH\ "(D,("H"	10 8</R
C"FN@* J*@$D,>46	150 8(/(" BD4 10 8</R = 45 8(/<4>

AD4 D"FN@*, <,>,, R,< 50 8(/ <4> 8@<B:,8H &>,F,>4b <":ZN *@2 *@:0,> @$b2"H,:\>@ 4FB@:\2@&"H\Fb.

- A@:@0,>4, T8":Z *@24DJ`V,6 D,(J:4D@&@R>@6 TH">(4 = 63 (150 8(/ (" x 3) (5)
- CZR"(@H8DZH4b @H&,DFH46 *@24DJ`V,(@ *4F8" & *,D0"H,:, F @*>@6 BD@D,2\` (3).
- AD4 2>"R,>44 B@:@0,>4b D,(J:4D@&@R>@6 TH">(4 63 D"FN@* J*@$D,>46 F@FH"&:b,H @$ZR>@ 134 8(/ <4>, " F 8@<B:,8H@< &>,F,>4b <":ZN *@2 & HD4 D"2" <,>\T, - 45 8(/ <4>.
- A@24P4b $J8&Z *:b >"FHD@684 D,(J:4D@&@R>@(@ DZR"(" B@:@0,>4b @H&,DFH4b HJ8@>"BD"&4H,:b BD4 45 8(/ <4> F@@H&,HFH&J,H 0 (7)
- AD@&@*bH BD@$>J` >"FHD@68J (2" 40 F D"FN@* J*@$D,>46 *@:0,> F@FH"&4H\ 15 8()
- AD4 >,@$N@*4<@FH4 8@DD,8H4DJ`H B@:@0,>4, D,(J:4D@&@R>@6 TH">(4.

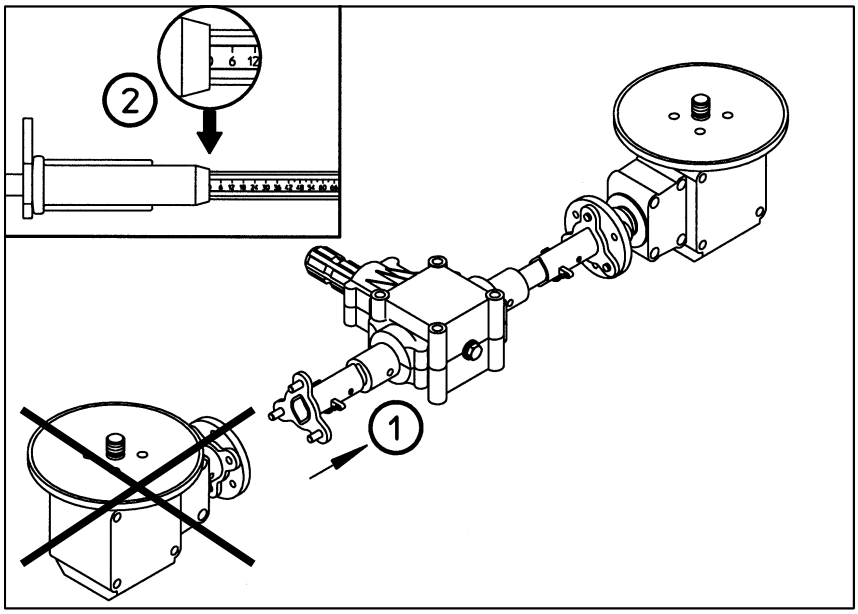

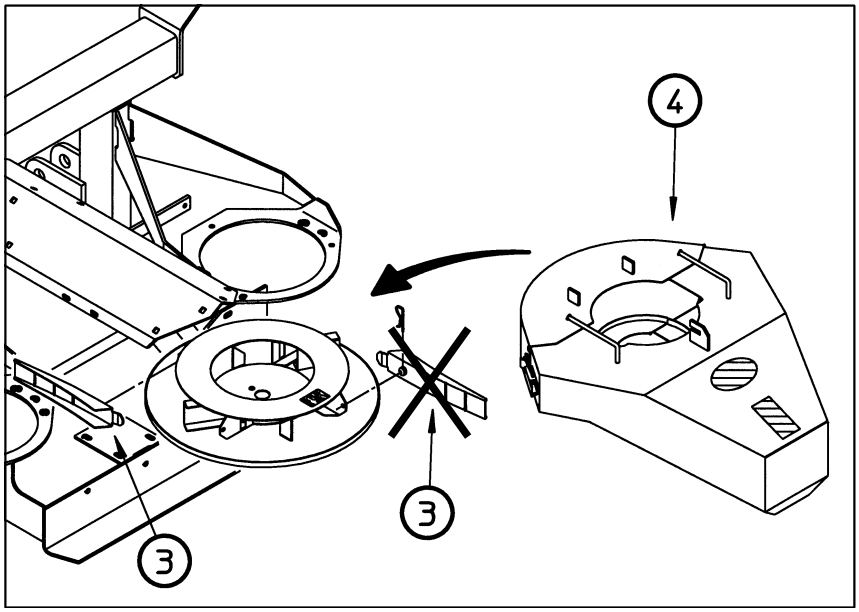

AC?#=Ia=IEGC?57I

C,(J:4D@&@R>Z, H"$:4PZ >"FHD@684 >" *@2Z &>,F,>4b J*@$D,>46 F@2*"&":4F\ F 4FB@:\2@&">4,< &ZF@8@8"R,FH&,>>ZN <4>,D":\>ZN J*@$D,>46 4 F@&D,<,>>ZN BD4$@D@&. ?*>"8@ >" BD"8H48, <@0,H $ZH\ F4HJ"P4b, RH@ %"T4 BD@42&@*FH&,>>Z, JF:@&4b @H:4R"`HFb @H F4HJ"P44 H,FH4D@&">4b, BD4 8@H@D@6 %48@> JFH">@&4: 2>"R,>4b *:b D,(J:4D@&@R>ZN H"$:4P. E B@<@V\` BD@$>@6 >"FHD@684 <@0>@ JFH">@&4H\ &@2<@0>Z, D"2:4R4b & N"D"8H,D4FH48, <4>,D":\>ZN J*@$D,>46 4 &@2>48"`V4, 42-2" ^H@(@ @H8:@>,>4b *@2 &>,F,>4b F8@DD,8H4D@&"H\ F@@H&,HFH&J`V4<4 FB@F@$"<4.

?AIE=?EG[: A,D,* 2"(DJ28@6 $J>8,D" <"T4>Z <4>,D":\>Z<4 J*@$D,>4b<4 BD@R4H"6H, @$b2"H,:\>@ D,8@<,>*"P44 42(@H@&4H,:b B@ BD"&4:"< H,N>484 $,2@B"F>@FH4; BD4 >,@$N@*4<@FH4 4FB@:\2J6H, FB,P4":\>J` 2"V4H>J` @*,0*J.

AD@$>J` >"FHD@68J <@0>@ BD@&@*4H\ 8"8 BD"&@(@, H"8 4 :,&@(@ *@24DJ`V,(@ JFHD@6FH&". =40, @B4FZ&",HFb B@F:,*@&"H,:\>@FH\ &ZB@:>,>4b BD@$>@6 >"FHD@684 *:b BD"&@6 FH@D@>Z <"T4>Z.

- **?H8:`R4H, &": BD4&@*" :,&@(@ *4F8"** (1) 4 BD4 F"<@6 8@D@H8@6 B@24P44 ,(@ F>@&" 2"L48F4DJ6H,. G,B,D\ F@,*4>,>4, <,0*J :,&Z< D"FF,4&"`V4< *4F8@< 4 ,(@ BD4&@*@< BD,D&">@.
- **9,&J` D,(J:4D@&@R>J` TH">(J** F@ T8":@6 JFH">@&4H, & B@:@0,>4, 0 (2), H"8 RH@$Z >" :,&Z6 *4F8 &@ &D,<b BD@$>@6 >"FHD@684 >, B@FHJB":4 J*@$D,>4b.
- **9@B"H84** (3) **BD"&@(@ D"FF,4&"`V,(@ *4F8" F>4<4H,**.
- G,B,D\ JFH">@&4H, >" BD"&Z6 *4F8 FB,P4":\>Z6 J:"&:4&"`V46 $J>8,D (4).
- AD@8@>HD@:4DJ6H, $:@84D@&">4, 8@0JN" (5).
- % H,HD"*4 D,(J:4D@&@R>ZN H"$:4P >"FHD@684 >" *@2Z &>,F,>4b J*@$D,>46 B@*$,D4H, F&@6 &4* J*@$D,>46 4 D"$@RJ` T4D4>J &>,F,>4b.
- % D,(J:4D@&@R>@6 H"$:4P, >"FHD@684 &Z$,D4H, FH@:$,P F >,@$N@*4<@6 F8@D@FH\` D"$@HZ "(D,("H".
- % ^H@< FH@:$P, H"$:4PZ >"6*4H, 0,:",<J` *@2J &>,F,>4b J*@$D,>46 >" (,8H"D.
- % 8D"6>,< :,&@< FH@:$P, <@0>@ BD@R4H"H\ BD@H4& 0,:",<@6 *@2Z >,@$N@*4<@, B@:@0,>4, T8":Z D,(J:4D@&@R>@6 TH">(4.
- #J>8,D D"FF,4&"H,:b >"B@:@&4>J >"B@:>4H, <4>,D":\>Z<4 J*@$D,>4b<4.

I7I1I=3+: AD4 F&,0, >"B@:>,>>@< $J>8,D, <@(JH BD@4FN@*4H\ >,$@:\T4, @H8:@>,>4b BD4 @BD,*,:,>44 BD@BJF8>@6 FB@F@$>@FH4 >" &ZF,&, <4>,D":\>ZN J*@$D,>46.):b B@:JR,>4b H@R>ZN D,2J:\H"H@& D,8@<,>*J,HFb, RH@$Z <"T4>" *@ BD@&,*,>4b 42<,D,>46 BD@$>@6 >"FHD@684 B,D&@>"R":\>@ BD@D"$@H":" BD4<,D>@ 10 F.

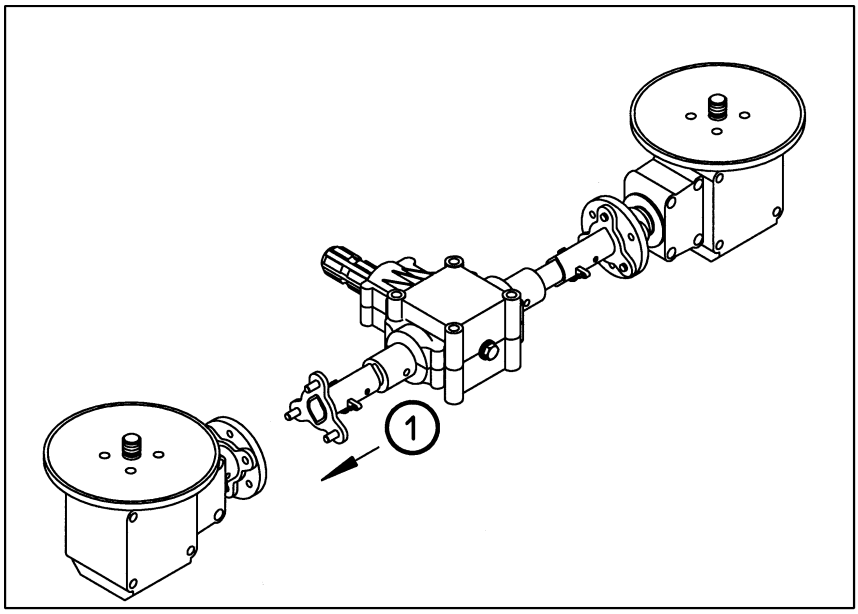

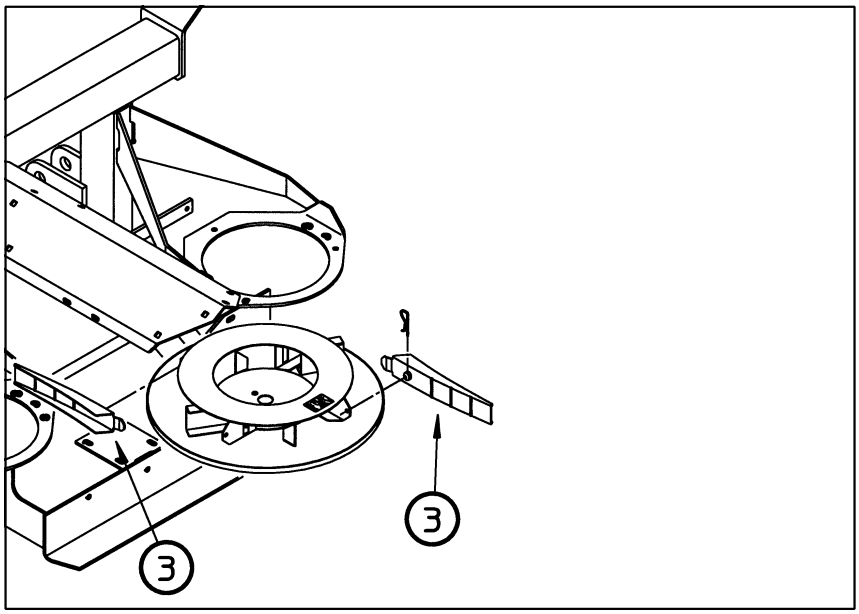

- **1"H,< 2"BJF8" `H <"T4>J & D"$@HJ >" @*>J <4>JHJ** (**BD4 $@:\T4N *@2"N &>,F,>4b BD@*@:04H,:\>@FH\ @BZH" <@0>@ J<,>\T4H\ *@** 30 **F,8J>***). **)4F8 2"D">,, BD4&@*bH && &D"V,>4,** (**BD4 R"FH@H, &D"V,>4b &":" @H$@D" <@V>@FH4** 540 **@$.** / **<4>**).
- **1"H,< @H8DZ&" `H 2"F:@>8J B@FHJB:,>4b J*@$D,>46 >" *4F8**.
- **A@F:, 2"8DZH4b 2"F:@>84 *4F8" &2&, T4&" `H F@$D">>Z, <4>,D":\>Z, J*@$D,>4b**.
- **AD,*FH"&:,>>Z, & D,(J:4D@&@R>@6 H"$:4P, 2>"R,>4b J<>@0" `H >" *&"** ( **>"** 2 **D"FF,4&" `V4N *4F8"**). **]H@ b&:b,HFb 2>"R,>4,< BD@BJF8>@6 FB@F@$>@FH4** (**B@*"R4**) **& 8(** / **<4> *:b &F,6 <"T4>Z** (**BD4 BD@*@:04H,:\>@FH4 @BZH"** 30 **F,8J>* 42<,D,>>@, 2>"R,>4, J<>@0",HFb >, >"** 2, **" >"** 4).
- **A@F:, BD@$>@6 >"FHD@684 :@B"H84 (3) <@>H4DJ`H F>@&" >" *4F8, 8"8 BD,*JF<@HD,>@ H"$:4P,6 4 BD4F@,*4>b`H BD4&@*>@6 &": :,&@(@ *4F8" 8 L:">PJ D,*J8H@D" (1)**.

AD4<,D: **%Z N@H4H, D"FF,bH\ (D">J:4D@&">>Z, J*@$D,>4b** Rhe-Ka-Phos-Granulat 17-17-17 **>" D"$@R,6 T4D4>,** 18 **< BD4 *@2, &>,F,>4b** 450 **8(** / **(" 4 F8@D@FH4 "(D,("H"** 8 **8<**-/R.

- **C,(J:4D@&@R>"b TH">(" *@2Z &>,F,>4b JFH">@&:,>" >" B@24P44** 45.**]H@ *".H** 73 **8(**/**<4> BD4 D"$@H, *&JN *4F8@& 4:4** 36,5 **8(**/**<4> BD4 D"$@H, @*>@(@ *4F8"**. **]H@ F@@H&,HFH&J,H B@FHJB:,>4`** 18,3 **8(J*@$D,>46 >" @*4> *4F8 2"** 30 **F,8J>***.
- **AD@&,*.< BD@$>J` >"FHD@68J BD@*@:04H,:\>@FH\`** 30 **F,8J>***.
- **%,FZ B@8"2":4 2"** 30 **F,8J>* @BZH" 8@:4R,FH&@ &Z*">>ZN J*@$D,>46** 16 **8(**; **^H@ F@@H&,HFH&J,H** 32 **8(/<4> >" *4F8**, **" *:b *&JN *4F8@& 2>"R,>4, $J*,H F@FH"&:bH** 64 **8(/<4>**.
- **1>"R,>4, <"FFZ F@$D">>ZN BD4 >"FHD@68, J*@$D,>46 BD4&,*,>@ & D,(J:4D@&@R>@6 H"$:4P, >" HD4 FHJB,>4 >40,**, H. **,. BD4 *DJ(@6 D,(J:4D@&8,**.
- **C"FF,4&"H,:\ D,(J:4DJ`H 8"8 J8"2">@ & H"$:4P, >"** 3 **FHJB,>4 &ZT, 4 B@&H@Db`H F>@&" BD@$>J` >"FHD@68J**.

?AIE=?EG[: %F,(*" BD4&@*>@6 &": :,&@(@ D"FF,4&"H,:b >"*@ BD4&,FH4 & @H8:`R,>>@, J8@D@R,>>@, F@FH@b>4,** (1), **BD,0*, R,< BD4FHJB4H\ 8 BD@P,*JD, >"FHD@684**, **H"8 8"8 :,&Z6 D"FF,4&"H,:\ &@ &D,<b BD@$>@6 >"FHD@684 >, *@:0,> D"$@H"H\. )&4("H,:\ HD"8H@D" 2"BJF8"6H, H@:\8@ H@(*"**, **8@(*" %Z J&,D,>Z**, **RH@ J:"&:4&"`V46 $J>8,D JFH">@&:,> BD"&4:\>@.

AD@$>"b >"FHD@68" 4 :,&@(@ D"FF,4&"`V,(@ *4F8" <@0,H BD@&@*4H\Fb H"84< 0, <,H@*@<.

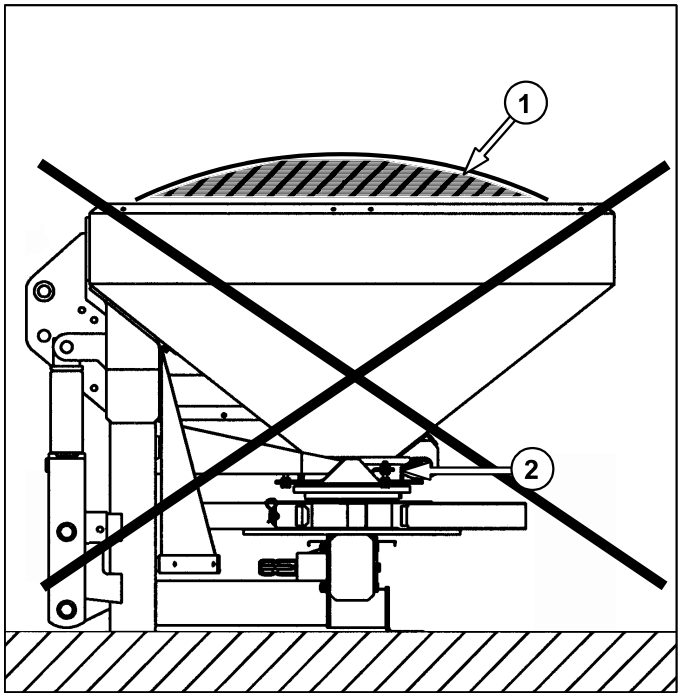

C I#?G I C IEE+3%IG+9a = I %=+E+=33 I)?#C+=35

%=3 ; I=3+: C"FF,4&"H,: F >"B@:>,>>Z< $J>8,D@< >48@(*" >, @FH"&:b6H, >" ND">,>4, (1). =48@(*" >, *@BJF8"6H, &D"V,>4b D"FF,4&"`V4N *4F8@&, ,F:4 $J>8,D <"T4>Z R"FH4R>@ 2"B@:>,> J*@$D,>4b<4 4 <"T4>" FH@4H >" (DJ>H,, RH@$Z >, B@&D,*4H\ &ZBJF8>Z, HDJ$Z (2). +F:4 D"FF,4&"H,:\ HD">FB@DH4DJ,HFb >" BD4P,B,, H@ H@:\8@ D"<J <@0>@ BD@R>@ BD48D,B:bH\ 8 @F>@&">4` (B@:J) HD">FB@DH>@(@ FD,*FH&". #J>8,D >,:\2b F4:\>@ BD4Hb(4&"H\ FHD@B"<4 42-2" @B"F>@FH4 B@&D,*4H\ *"HR484 <"FFZ.

- 1"F:@>84 *@24DJ`V,(@ JFHD@6FH&" *@:0>Z $ZH\ 2"8DZHZ F B@<@V\` (4*D@F4FH,<Z HD"8H@D" *@ 2"B@:>,>4b $J>8,D" J*@$D,>4b<4. AD@&,D\H,, 8"8 JFH">@&:,>" @H84*>"b D,T.H8" & $J>8,D,.
- ;4>,D":\>Z, J*@$D,>4b 2"(DJ0"6H, & $J>8,D H@:\8@ >,2"*@:(@ *@ 4N &>,F,>4b.
- ;4>,D":\>Z, J*@$D,>4b D"FBD,*,:b6H, & $J>8,D, D"&>@<,D>@, " &@2<@0>Z, 8@<84 *@:0>Z 42<,:\R4H\Fb BD4 BD@N@0*,>44 R,D,2 @H84*>J` D,T.H8J. #J>8,D <"T4>Z >, >"B@:>b6H, >48@(*" H"8 &ZF@8@, RH@$Z J*@$D,>4b H,Db:4F\ BD4 HD">FB@DH4D@&8,.
- A@**,D04&"6H, *@:0>J` &ZF@HJ D"FF,4&"`V4N *4F8@& & D"$@R,< B@:@0,>44 4 JFH">"&:4&"6H, D"FF,4&"H,:\ FHD@(@ & (@D42@>H":\>@< B@:@0,>44 (8"8 BD4 &4*, F$@8J, H"8 4 BD4 @F<@HD, F2"*4) (**F<. FHD">4PJ** 12 «C+'I93C?%73 A+C+) %=+E+=3+; I)?#C+=35»).
- %": @H$@D" <@V>@FH4 HD"8H@D" >" B@:, D"2(@>b6H, B:"&>@ *@ 540 @$. / <4>.

I7I1I=3+: C"FF,4&"`V4, *4F84 BD4 2"8DZHZN 2"F:@>8"N *@24DJ`V4N JFHD@6FH& 42:4T>, >, D"2(@>bH\, RH@$Z 42$,0"H\ 42:4T>,(@ 42<,:\R,>4b (D">J: <4>,D":\>ZN J*@$D,>46.

- 1"F:@>8J *@24DJ`V,(@ JFHD@6FH&" @H8DZH\ & >"R":, *&40,>4b "(D,("H" 4 R"FH@HJ &D"V,>4b D"FF,4&"`V4N *4F8@& *,D04H, B@FH@b>>@6.

+F:4 *@24D@&">4, J*@$D,>46 && &D,<b *&40,>4b "(D,("H" HD,$J,HFb >,<>@(@ 42<,>4H\, >"BD4<,D, ^<B4D4R,F84 JFH">@&:,>@, RH@ >" @BD,*,:,>>ZN JR"FH8"N B@:, >J0*",HFb & $@:\T,< 4:4 >,<>@(@ <,>\T,< 8@:4R,FH&, <4>,D":\>ZN J*@$D,>46, H@ <@0>@:

- $@:,, $ZFHD@ ,N"H\, &F:,*FH&4, R,(@ L"8H4R,F8"b *@2" &>@F4<ZN J*@$D,>46 >" (,8H"D J<,>\T4HFb;
- $@:,, <,*:,>>@ ,N"H\, &F:,*FH&4, R,(@ L"8H4R,F8"b *@2" &>@F4<ZN J*@$D,>46 >" (,8H"D J&,:4R4HFb.

AD4 ^H@< R"FH@H" &D"V,>4b *&4("H,:b HD"8H@D" (4 &<,FH, F H,< &":" @H$@D" <@V>@FH4) *@:0>" @FH"&"H\Fb &F,(*" B@FH@b>>@6 (*:b @$,FB,R,>4b D"&>@<,D>@(@ B@B,D,R>@(@ D"FBD,*,:,>4b <4>,D":\>ZN J*@$D,>46). **E8@D@FH\ *&40,>4b "(D,("H" <@0>@ 42<,>bH\ H@:\8@ B,D,8:`R,>4,< >" *DJ(J` FHJB,>\ 8@D@$84 B,D,*"R!**

I7I1I=3+: 32-2" D"2:4R>ZN @B@D>ZN F&@6FH& B@&,DN>@FH4 B@:b <@0,H BD@4FN@*4H\ D"2>@, $J8F@&">4, 8@:.F HD"8H@D", 8@H@D@, B@&:4b,H >" F8@D@FH\ "(D,("H" 4 H,< F"<Z< H"80, >" L"8H4R,F8J` *@2J &>@F4<ZN >" (,8H"D J*@$D,>46.

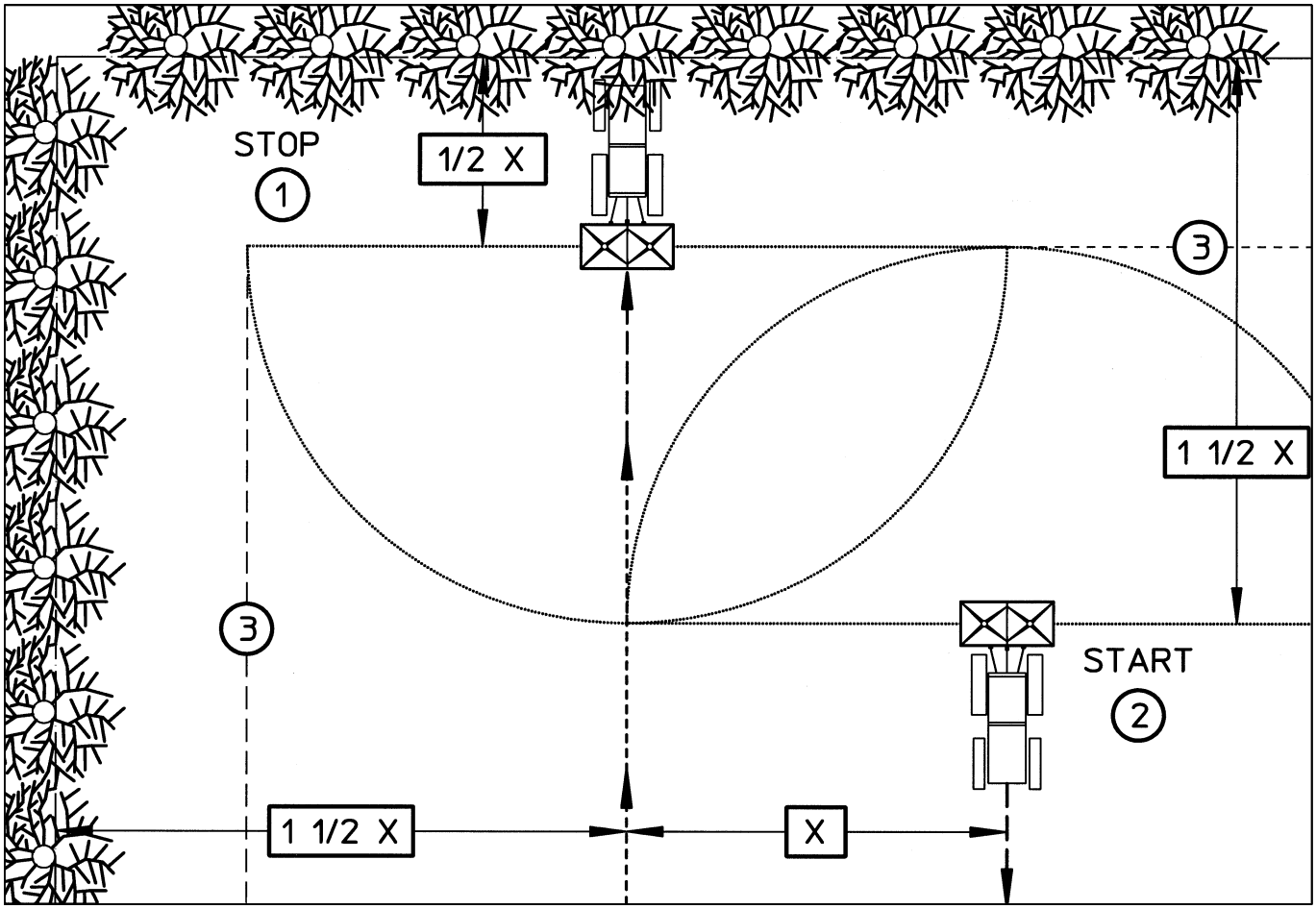

A?%?C?GY I'C+'IGI 3 CIEE+3%I=3+=I 7CI _ A?9a

7"8 %Z *@:0>Z @FH">"&:4&"H\Fb >" 8D"` B@:b 4 B@&@D"R4&"H\, 2"&4F4H @H H@(@, BD@4FN@*4H :4 &>,F,>4, >" 8D"` B@:b (F >"8:@>>@ B@FH"&:,>>@6 <"T4>@6) 4:4 BD,8D"V,>@ &>,F,>4, @FH">@&8@6 @*>@(@ *4F8" 4 BD4<,>,>4,< V4H8"-@(D">4R4H,:b (@*>@*4F8@&@, B@(D">4R>@, &>,F,>4,).

+F:4 <"T4>" $J*,H >"8:@>>@ B@FH"&:,>" *:b &>,F,>4b >" 8D"` B@:b 4:4 ,F:4 $J*,H, D"$@H"H\ 2" *&" BD@N@*" F@ V4H8@<-@(D">4R4H,:,<, >J0>@ F@$:`*"H\ F:,*J`V,,:

- **=" D"FFH@b>44, D"&>@< D"$@R,6 T4D4>, 2"N&"H", *@ 8D"b B@:b @8">R4&"6H, BD@P,FF &>,F,>4b BJH.< 2"8DZH4b 2"F:@>84 *@24DJ`V,(@ JFHD@6FH&" <"T4>Z (1).**
- **C"FF,4&"`V46 *4F8>, &Z8:`R"6H, (@> BD@*@:0",H &D"V"H\Fb).**
- **A@F:, D"2&@D@H" <"T4>Z 2"F:@>8J *@24DJ`V,(@ *4F8" >,@$N@*4<@ @BbH\ @H8DZH\ B@F:, J*":,>4b "(D,("H" @H 8D"b B@:b >" D"FFH@b>4,, D"&>@, B@:H@DZ D"$@R4, T4D4>Z (2).**
- **AD4 @$D"$@H8, 8D"b B@:b 4:4 ,(@ >"R":" >"8:@>>@ JFH">@&:,>>@6 <"T4>@6 F:,*J,H DJ8@&@*FH&@&"H\Fb @B4F">4,< «%>,F,>4, >" 8D"` B@:b BD4 D"$@H, *&JN *4F8@&» >" FHD">4P, 22 4:4 «%>,F,>4, >" 8D"` B@:b BD4 D"$@H, @*>@(@ *4F8"», <,H@* ! >" FHD">4P, 25 (3). AD4 4FB@:\2@&">44 <,H@*" ! 8D"6 B@:b *@:0,> @$D"$"HZ&"H\Fb ,V. D"2.**

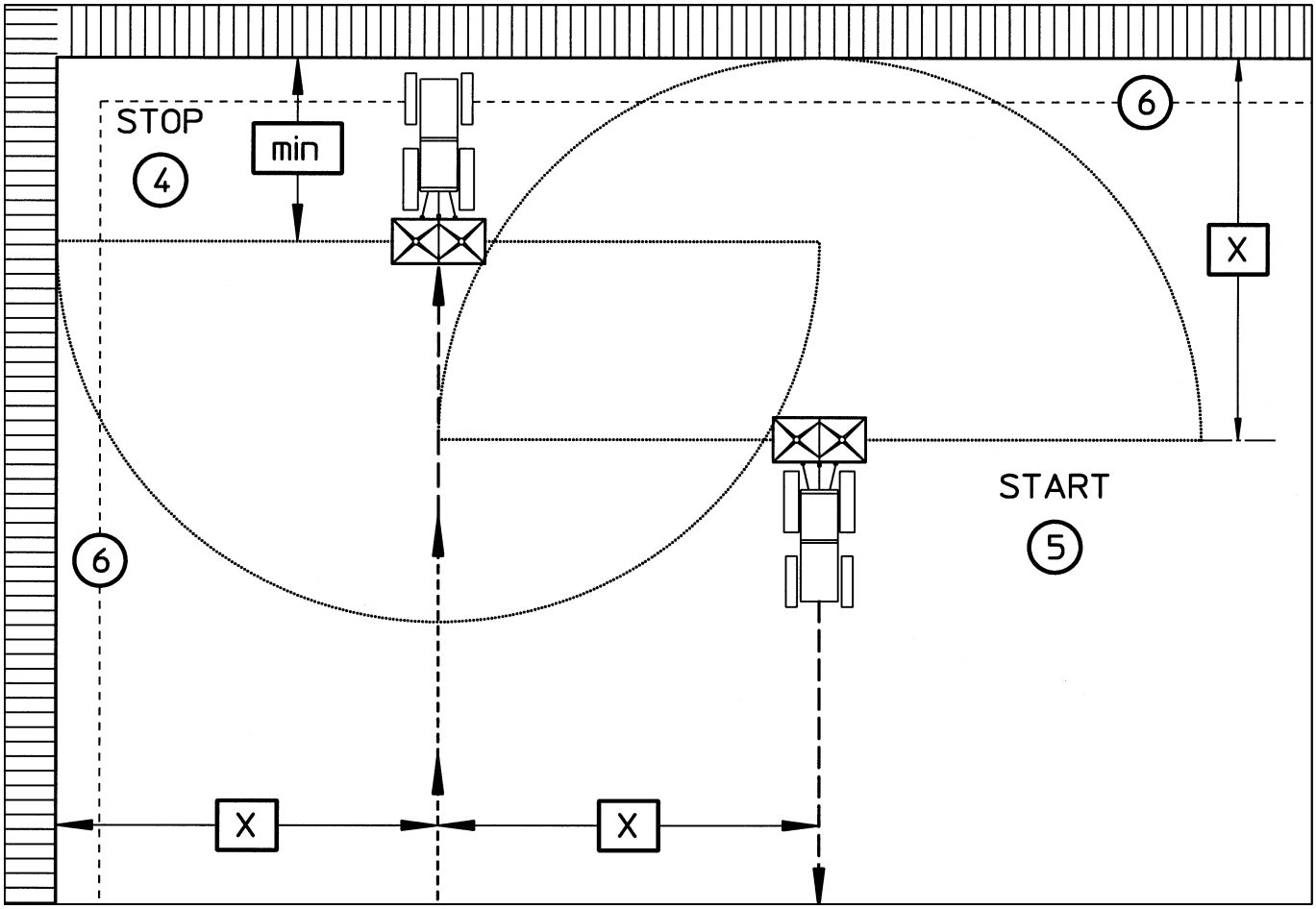

+F:4 4FB@:\2J,HFb V4H@8-@(D">4R4H,:\ *:b @(D">4R,>4b T4D4>Z &>,F,>4b >" 8D"` B@:b B@ <,H@*J B, 8"8 @B4F">@ >" FHD">4P, 24, >J0>@ D"$@H"H\ F:,*J`V4< @$D"2@<:

- A@*&,FH4 "(D,("H B@ &@2<@0>@FH4 8"8 <@0>@ $:40, 8 8D"` B@:b 4 BD,8D"H4H\ &>,F,>4, J*@$D,>46 >,B@FD,*FH&,>>@ B,D,* D"2&@D@H@< BJH.< 2"8DZH4b 2"F:@>84 *@24DJ`V,(@ JFHD@6FH&" (4).
- C"FF,4&"`V4, *4F84 >, @FH">"&:4&"H\: @>4 BD@*@:0"`H &D"V"H\Fb.
- Z A@F:, D"2&@D@H", 8@(*" "(D,("H @HX,*,H @H 8D"b B@:b >" D"FFH@b>4,, D"&>@, B@:>@6 D"$@R,6 T4D4>, 2"N&"H" D"FF,4&"H,:b, *@24DJ`VJ` 2"F:@>8J F>@&" @H8DZH\ (5).
- 7@>,P 4:4 >"R":@ 8D"b B@:b @$D"$"HZ&"H\ B@F:, @FH">@&84 D"FF,4&"`V4N *4F8@& 4 JFH">@&84 V4H8"-@(D">4R4H,:b, 8"8 @B4F">@ & D"2*,:, «%>,F,>4, >" 8D"` B@:b BD4 D"$@H, @*>@(@ *4F8"», <,H@* ! >" FHD">4P, 23 (6).

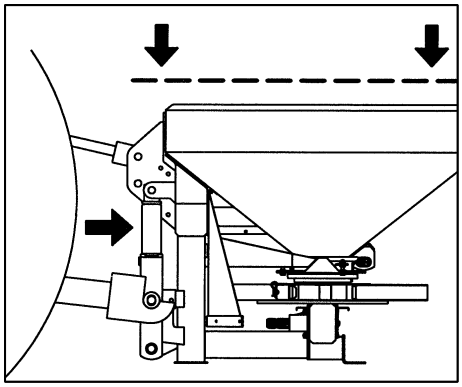

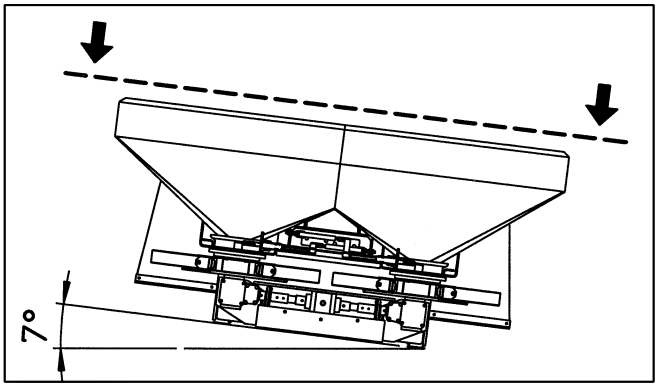

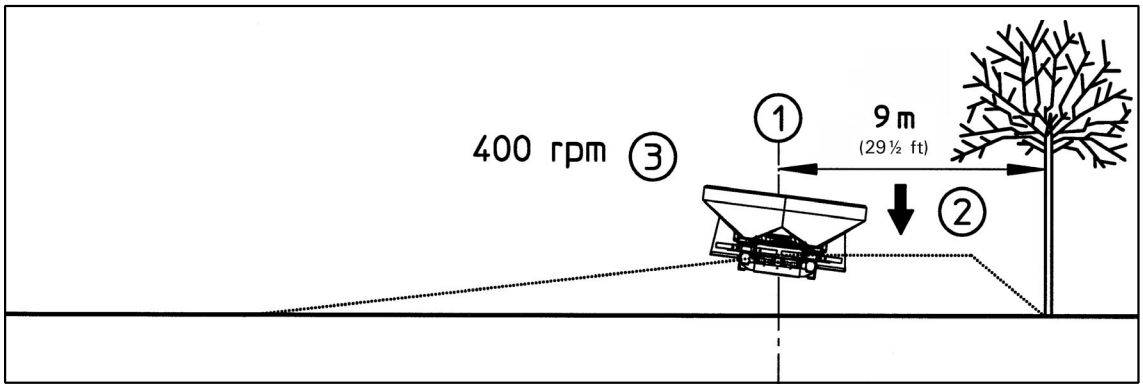

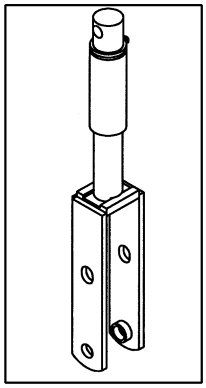

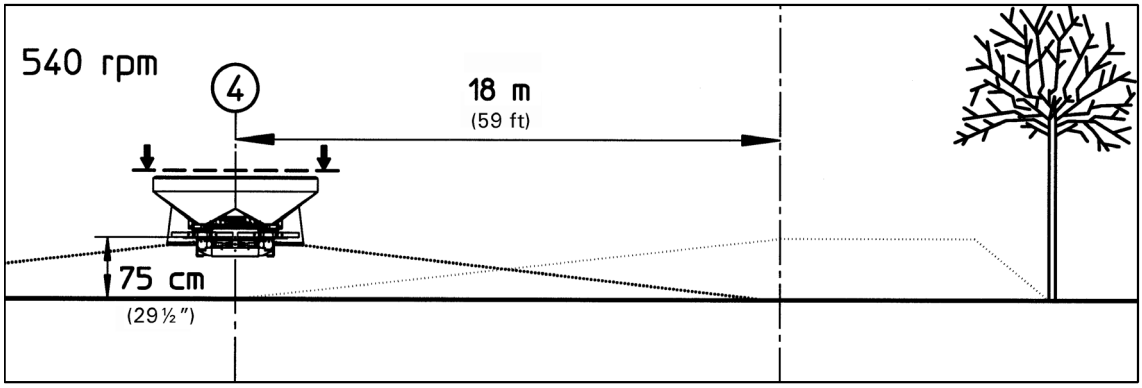

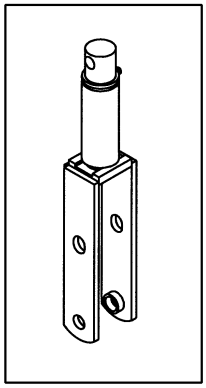

%=+E+=3+ =I 7CI _ A?9a AC3 CI#?G+)%IM)3E7?%

+F:4 >,@$N@*4<@ BD@42&,FH4 BD@P,FF &>,F,>4b BD4 FJ0 ,>>@< (<,>,, JFH">@&:,>>@6 D"$@R,6 T4D4>Z 2"N&"H") BD@N@*, "(D,("H", H@ <@0>@ 8D"6 B@:b @$D"$@H"H\ BD4 B,D&@< BD@N@*, "(D,("H" &*@:\ (D">4PZ B@:b.]H@(@ <@0>@ *@FH4(>JH\ 2" FR.H >"8:@>" D"FF,4&"H,:b & HJ FH@D@>J, F 8@H@D@6 *@:0>" F@8D"H4H\Fb T4D4>" &>,F,>4b. G"84< @$D"2@< &F, (D">J:Z J*@$D,>46 D"FBD,*,:b`HFb >" FH@D@>, F <,>\T,6 T4D4>@6 &>,F,>4b 4 ^H@ >, @HD"0",HFb >" FD,*>,6 *@2, &>,F,>4b >" (,8H"D. IFH">@&8" <"T4>Z B@* J(:@< <@0,H J*@$>@ BD@42&@*4H\Fb 42 8"$4>Z HD"8H@D" F B@<@V\` P4:4>*D" J(:" JFH">@&84 >"8:@>" <"T4>Z, 8@H@DZ6 B@FH"&:b,HFb B@:\2@&"H,:` B@ ,(@ 0,:">4`.)@24D@&8" 4 D,(J:4D@&8" B@:@0,>4b &ZN@*>@(@ @H&,DFH4b HJ8@>"BD"&4H,:b BD4 ^H@< <,H@*, B@(D">4R>@(@ &>,F,>4b >, 42<,>b`HFb.

%=3 ; I=3+:
; 4>,D":\>Z, J*@$D,>4b &Z$D"FZ&"`HFb F :,&@6 FH@D@>Z <"T4>Z F @H>@F4H,:\>@ $@:\T@6 F4:@6. QH@$Z @(D">4R4H\ *@ <4>4<J<" @B"F>@FH\ B@&D, 0*,>4b D"FH,>46, >,@$N@*4<@ BD4 B@2*>,6 B@*8@D<8, F@@H&,HFH&J`V4N D"FH,>46 BD4<,>bH\ V4H@8-@(D">4R4H,:\, 8@H@DZ6 B@FH"&:b,HFb B@ FB,P4":\>@<J 2"8"2J.

AD4 D"$@R,6 T4D4>, &>,F,>4b 18 < >J0>@ *,6FH&@&"H\ F:,*J`V4< @$D"2@<:
- A,D&Z6 BD@N@* >"R4>"H\ >" D"FFH@b>44 9 < @H 8D"b B@:b (1).
- ; "T4>J >"8:@>4H\ (2) (TH@8 P4:4>*D" B@:>@FH\` &Z*&4>JH).

I7I1I=3+:
Q"FH@HJ &D"V,>4b *4F8@& D"FF,4&"H,:,6 >J0>@ &Z$4D"H\ 4FN@*b 42 &@2<@0>@6 J(D@2Z *:b R,:@&,8" 4 @8DJ0"`V,6 FD,*Z H"84< @$D"2@<, RH@$Z >48"84, (D">J:Z >, B@B"*":4 2" 8D"6 B@:b. E>"R":" R"FH@H" &D"V,>4b &":" @H$@D" <@V>@FH4 *@:0>" $ZH\ @8@:@ 400 @$. /<4> (3) BD4 B@:>@FH\` &Z*&4>JH@< TH@8, P4:4>*D" JFH">@&84 J(:" >"8:@>". SH@8 P4:4>*D" <@0>@ >,<>@(@ &*&4>JH\, ,F:4 B@HD,$J,HFb *@B@:>4H,:\>@ &>,FH4 J*@$D,>4b & @$:"FH\ 8D"b B@:b. 7@(*" P4:4>*D JFH">@&84 J(:" &*&4(",H,, H@ J&,:4R4&"6H, R"FH@HJ &D"V,>4b &":" @H$@D" <@V>@FH4.

-):b B@F:,*J`V4N BD@N@*@& "(D,("H" JFH">@&4H, <"T4>J F>@&" (@D42@>H":\>@, B@:@0,>4, 8"8 & B@B,D,R>@<, H"8 4 & BD@*@:\>@< >"BD"&:,>44, R"FH@HJ &D"V,>4b &":" @H$@D" <@V>@FH4 *@&,*4H, *@ 540 @$ / <4> 4 D"FF,4&"6H, J*@$D,>4b F F4<<,HD4R>@6 N"D"8H,D4FH48@6 D"FBD,*,:,>4b F 4>H,D&":@< 18 < @H B,D&@(@ BD@N@*" (4).

%=3 ; I=3+: AD4 B@2*>4N B@*8@D<8"N 4 BD4 $@:\T@6 T4D4>, &>,F,>4b & B@(D">4R>@< D,04<, D"$@HZ <"T4>" *@:0>" $ZH\ >"8:@>," *@ 8 (D"*JF@& &B,D,* (F<@HD4 D,(J:4D@&@R>Z, H"$:4PZ).

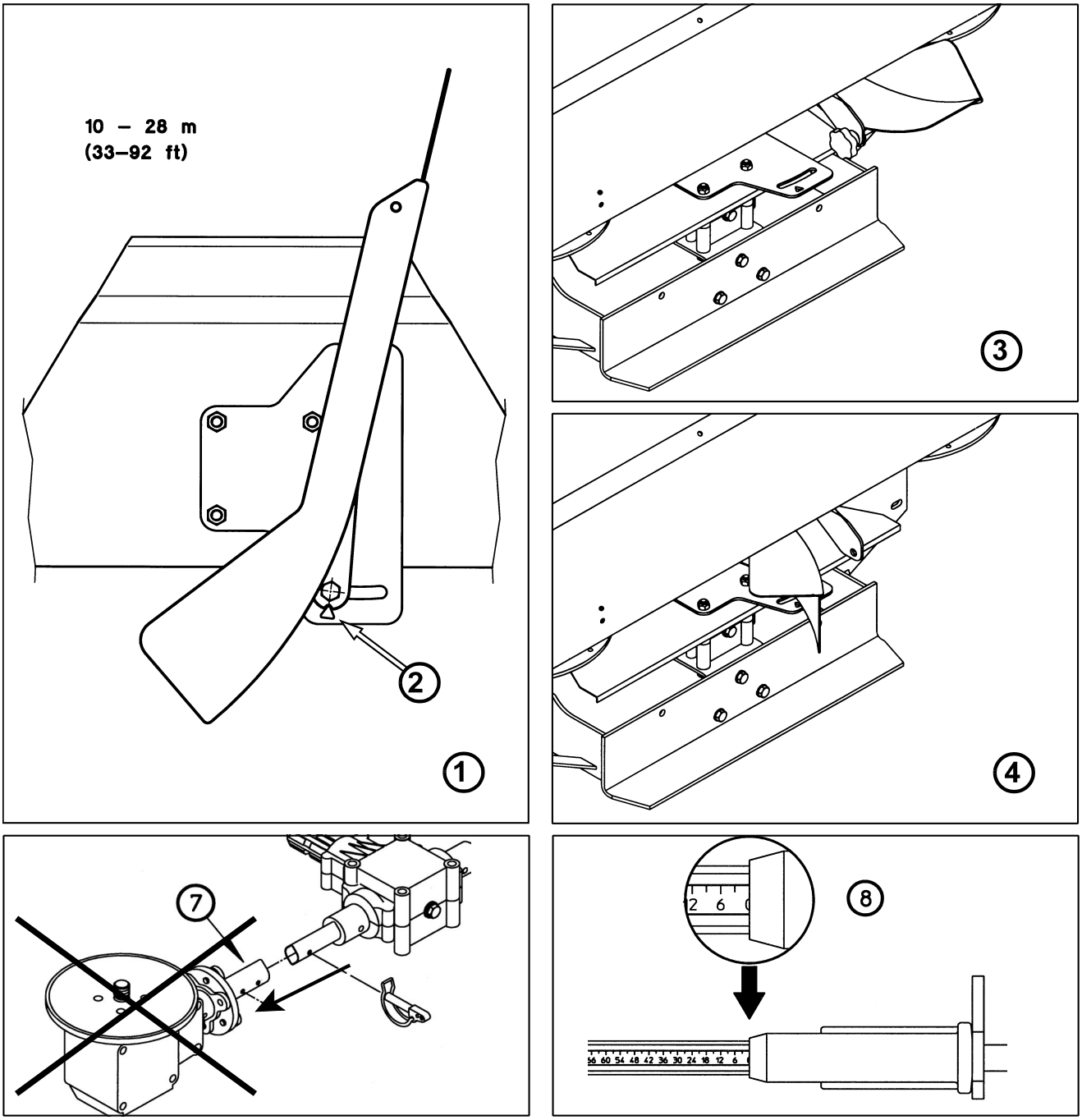

%=+E+=3+ =I 7CI _ A?9a AC3 CI#?G+ ?)=?'?)3E7I

+F:4 "(D,("H *&40,HFb >,B@FD,*FH&,>>@ &*@:\ 8D"b B@:b, H@ >"2Z&"`H ^H@ B@(D">4R>Z< &>,F,>4,<. AD4 H"8@< &>,F,>44 J*@$D,>46 F @*>4< D"$@H"`V4< D"FF,4&"`V4< *4F8@< <"T4>Z *@:0,> 4FB@:\2@&"H\Fb V4H@8-@(D">4R4H,:\ (4). G"84< FB@F@$@< <@0>@ H@R>@ @(D">4R4&"H\ D"$@RJ` T4D4>J &>,F,>4b F @*>@6 FH@D@>Z. U4H@8- @(D">4R4H,:\ B@FH"&:b,HFb 8"8 *@B@:>4H,:\>"b BD4>"*:,0>@FH\ 4 ,(@ <@0>@ BD@FH@ HD">FB@DH4D@&"H\ >" <"T4>, (3).

AD4 @*>@*4F8@&@< &>,F,>44 &@2<@0>Z *&" <,H@*" D"$@HZ:

; ,H@* A. % *&" BD@N@*" F@ V4H8@<-@(D">4R4H,:,<
(F<. FHD">4PJ 25)
; ,H@* B. % @*4> BD@N@* F@ V4H8@<-@(D">4R4H,:,<
(F<. FHD">4PJ 25)

)@24DJ`V,, @H&,DFH4, D"FB@:@0,>>@(@ F@ FH@D@>Z B@:b D"FF,4&"`V,(@ *4F8" 2"8DZ&"`H (8) 4 2"8D,B:b`H V4H@8-@(D">4R4H,:\ (4).

A@:@0,>4, J(@:8" B:"FH4>Z <@0,H 42<,>bH\Fb 2" FR.H B,D,<,V,>4b & BD@*@:\>@< B"2J (2); BD"&4:\>@, B@:@0,>4, JFH">"&:4&"`H (>"Db*J F 4>H,D&":@< <,0*J D"FF,4&"H,:,< 4 8D",< B@:b) & 2"&4F4<@FH4 @H &4*" 4FB@:\2J,<ZN J*@$D,>46, D"$@R,6 T4D4>Z &>,F,>4b, F8@D@FH4 &,HD" 4 ,(@ >"BD"&:,>4b.

I7I1I=3+: AD4 B@(D">4R>@< &>,F,>44 @$X,2*Z <@0>@ &ZB@:>bH\ H@:\8@ &:,&@.

?B"F>@FH\: A,D,* &8:`R,>4,< &":" @H$@D" <@V>@FH4 >,@$N@*4<@ J$,*4H\Fb, RH@ :@B"H84 D"FF,4&"H,:b >, 8@>H"8H4DJ`H F@ V4H8@<-@(D">4R4H,:,<!

C"FF,4&"`V4, *4F84 *@:0>Z $ZH\ &ZD@&>,>Z &(@D42@>H":\>@6 B:@F8@FH4 4 JFH">@&:,>Z >" &ZF@HJ 75 F< @H P,:,&@6 B@&,DN>@FH4.

I7I1I=3+:
;"T4>" & F,D46>@< 4FB@:>,>44 4<,,H *&" @H8:`R",<ZN BD4&@*>ZN &":" D"FF,4&"`V4N *4F8@&. AD4&@*>@6 &": D"FF,4&"`V,(@ *4F8", 8@H@DZ6 >, $J*,H &>@F4H\ J*@$D,>4b, *@:0,> $ZH\ @H8:`R,>, H"8 8"8 4>"R, @> $J*,H 42<,:\R"H\ <4>,D":\>Z, J*@$D,>4b (7).

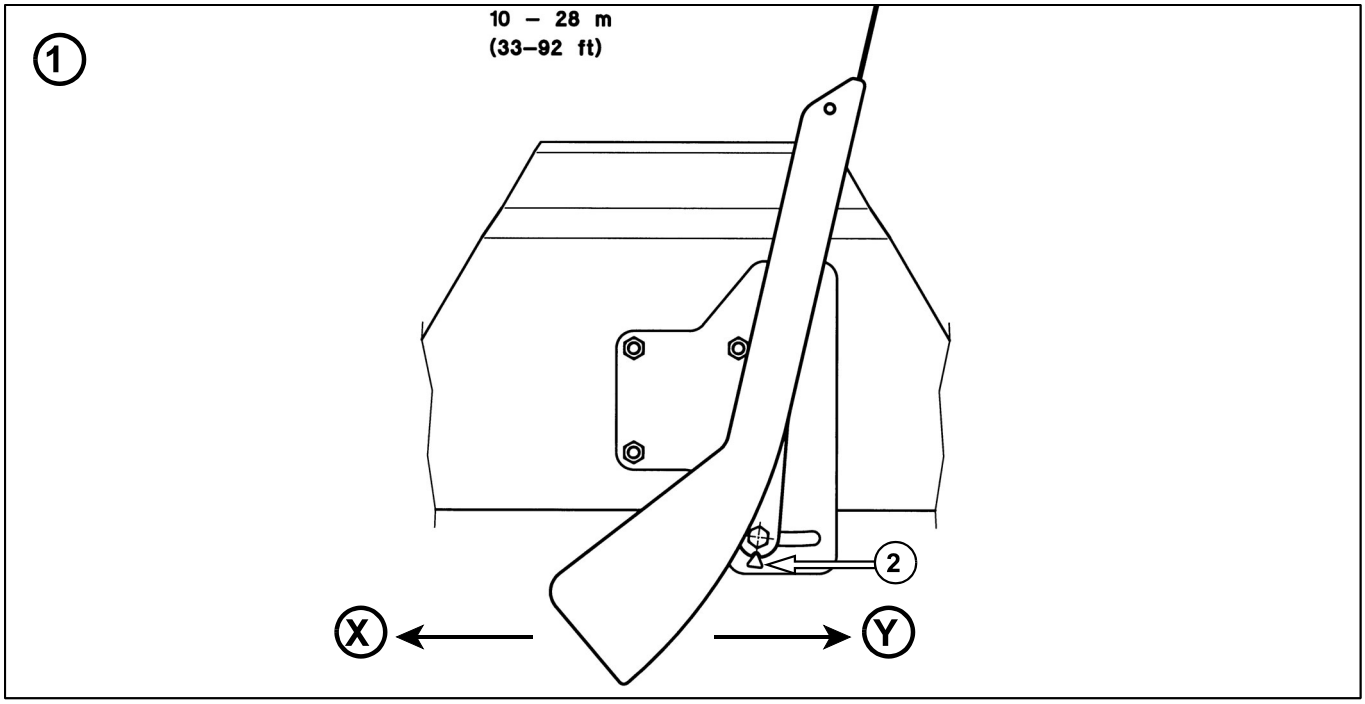

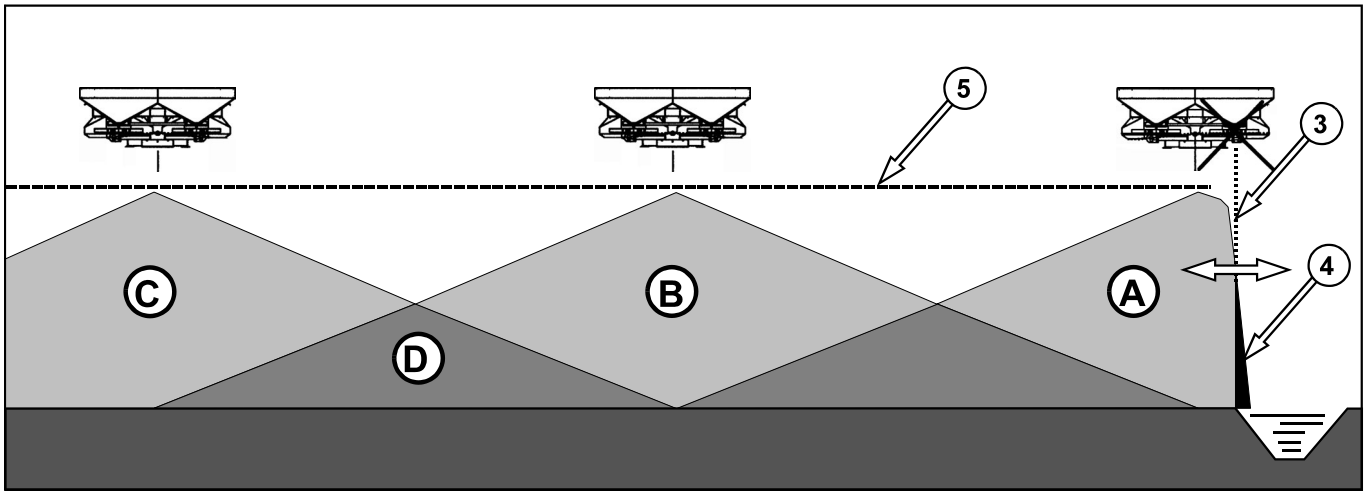

MICI7G+C3EG37I CIEAC+)+9+=3a I)?#C+=35 AC3 3EA?9[1?%!=33 U3G7!-?'C!=3Q3G+9a

#,2 V4H8"-@(D">4R4H,:b N"D"8H,D4FH48" D"FBD,*,:,>4b D"FF,4&">4b J*@$D,>46 4<,,H &4*, BD,*FH"&:,>>Z6 HD,J(@:\>48"<4 (B) 4 (C). ="8:"*Z&"` V4,Fb *DJ( >" *DJ(" @$:"FH4 (D) D"FBD,*,:,>4b J*@$D,>46 *@:0>Z FJ<<4D@&"H\Fb. A@:JR,>>"b H"84< FB@F@$@< @$V"b N"D"8H,D4FH48" D"FBD,*,:,>4b D"FF,4&",<ZN J*@$D,>46 BD,*FH"&:,>" >" :4>44 (5). G"8 8"8 >" BD"&@6 FH@D@>, D"FF,4&"H,:b (3) >,H >48"8@(@ B,D,8DZH4b, H@ HD,$J,HFb 8 8D"` B@:b &>,FH4 >,F8@:\8@ $@:\T,, 8@:4R,FH&@ J*@$D,>46, RH@$Z &ZD@&>bH\ 8"DH4>J D"FBD,*,:,>4b. 7D@<, H@(@, :4>4b, (D"L4R,F84 @HD"0"` V"b N"D"8H,D4FH48J D"FBD,*,:,>4b J*@$D,>46 BD"&@6 FH@D@>@6 <"T4>Z, *@:0>" J 8D"b B@:b FB"*"H\ 8"8 <@0>@ $@:,, 8DJR, ($:40, 8 &,DH48":4).

]H@(@ <@0>@ *@FH4(>JH\, ,F:4 >" @*>@6 4 H@6 0, B,D,*"R, HD"8H@D" 4 >, <,>bb D,(J:4D@&84 B@ *@24D@&">4` J<,>\T4H\ R"FH@HJ &D"V,>4b &":" @H$@D" <@V>@FH4 F 540 *@ 400 **@$.** / **<4> ($@:,, <,*:,>>@ ,N"H\!**).

=IEGC?57I U3G7I-?'CI=3Q3G+9a

C,8@<,>*J,<"b B@24P4b *:b V4H8"-@(D">4R4H,:b (1) <"D84D@&">" HD,J(@:\>48@< (2).
E B@<@V\` BD@D,24 & 8D,B:,>44 V4H8"-@(D">4R4H,:b <@0>@ 42<,>bH\ ,(@ B@24P4` B@ <,D, >"*@$>@FH4.

A@:@0,>4, & "&4*, 8DZT4" (F<,V,>4, & >"BD"&:,>44 X)
AJH.< F<,V,>4b V4H8"-@(D">4R4H,:b & >"BD"&:,>44 **M** 8DJH"b FH@D@>" N"D"8H,D4FH484 (3) F<,V",HFb >,F8@:\8@ &:,&@. 32$ZH@R>@, 8@:4R,FH&@ J*@$D,>46 & 2@>, (4) J<,>\T",HFb, >@, D"2J<,,HFb, B@:>@(@ &ZD"&>4&">4b N"D"8H,D4FH484 D"FBD,*,:,>4b >" 8D"` B@:b >, BD@4FN@*4H.

A@:@0,>4, &ZN@*" (F<,V,>4, & >"BD"&:,>44 Y)
AJH.< F<,V,>4b V4H8"-@(D">4R4H,:b & >"BD"&:,>44 Y 8DJH"b FH@D@>" N"D"8H,D4FH484 D"FBD,*,:,>4b J*@$D,>46 F<,V",HFb >,F8@:\8@ &BD"&@. %ZD"&>4&">4, D"FBD,*,:,>4b J*@$D,>46 & @$:"FH4 8D"b B@:b J:JRT",HFb. 32$ZH@R>@, 8@:4R,FH&@ J*@$D,>46 & 2@>, (4) >,F8@:\8@ J&,:4R4&",HFb.

%>4<">4,:
A@* "42$ZH@R>Z< 8@:4R,FH&@< J*@$D,>46 & 2@>," B@*D"2J<,&"`H <"FFJ J*@$D,>46, 8@H@D"b D"FF,4&",HFb 2" 8D"6 B@:b. AD4 @BH4<":\>@< &ZD"&>4&">44 J*@$D,>46 *@ 8D"b B@:b <"FF" D"FBD,*,:,>>ZN B@ B@&,DN>@FH4 J*@$D,>46 & 84:@(D"<<"N >" <,HD F@@H&,HFH&J,H JFD,*>.>>@6 >@D<, B@ &F,6 J*@$Db,<@6 B:@V"*4.I(@: >"8:@>" V4H8"-@(D">4R4H,:b <@0>@ 42<,>bH\ 2" FR.H B"2" & 8D,B:,>44. C,T"` V4<4 L"8H@D"<4 *:b BD"&4:\>@6 JFH">@&84 b&:b`HFb, >"Db*J F D"FFH@b>4b< <,0*J D"FF,4&"H,:,< 4 8D",< B@:b, H"80, &4* 4FB@:\2J,<ZN J*@$D,>46, D"$@R"b T4D4>" &>,F,>4b, F8@D@FH\ 4 >"BD"&:,>4, &,HD".

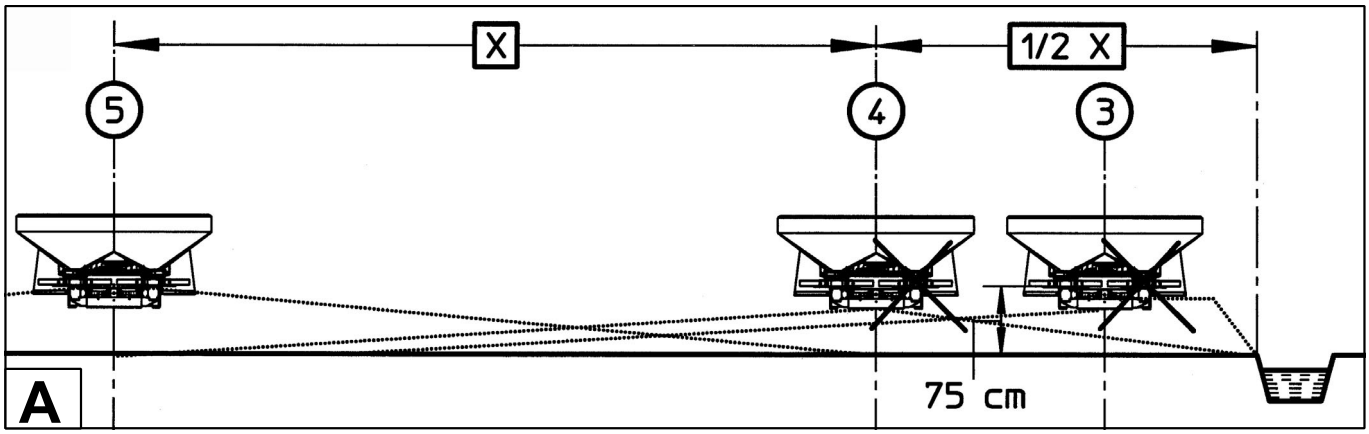

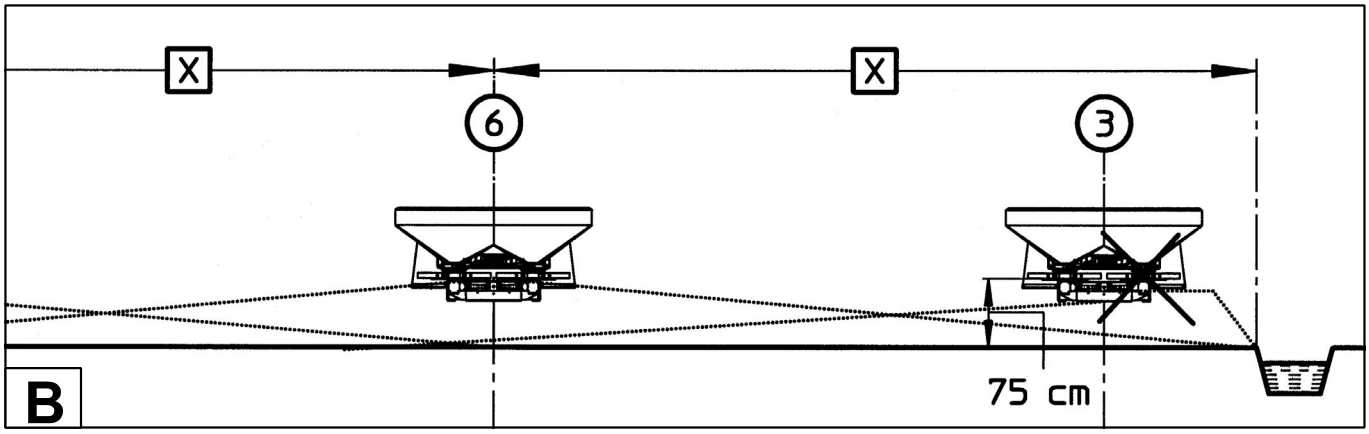

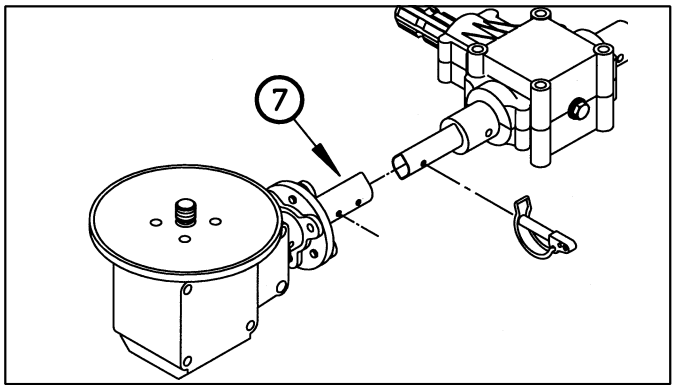

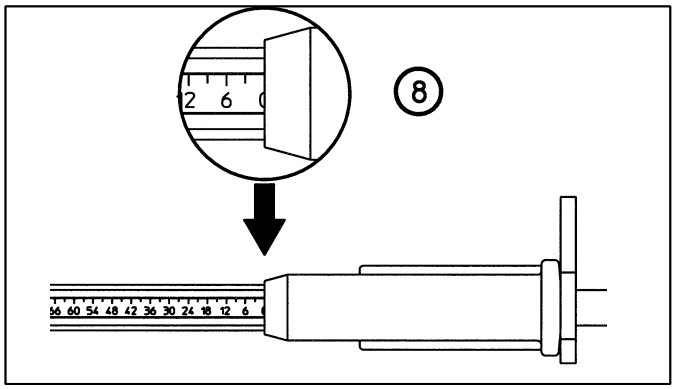

%>,F,>4, >" 8D"` B@:b @*>4< *4F8@<
1I)%I AC?M?) I E? U3G7?;-?'CI=3Q3G+9+; (<,H@* I)

- AD4 B,D&@< BD@N@*, J (D">4PZ B@:b (3) 4>H,D&": <,0*J HD"8H@D@< 4 8D",< B@:b *@:0,> F@FH"&:bH\ BD4$:424H,:\>@ 3 **< (<"T4>" BD4 ^H@< @F>"V,>" V4H8@<-@(D">4R4H,:,<, " &": @H$@D" <@V>@FH4 HD"8H@D" &D"V",HFb BD4** 400 **@$./ <4>)**.
- AD4 &H@D@< BD@N@*, &H@D@6 D"FF,4&"` V46 *4F8 F>@&" 2"$:@84D@&"> (7), **@*>"8@ V4H@8-@(D">4R4H,:\ F>bH, " "(D,("HJ *&4("H\Fb >"*@ B@ B,D&@<J BD@N@*J BD4 @$@D@H"N %?;** (4) 540 **@$. / <4>.**
- AD4 HD,H\,< BD@N@*, D"FF,4&">4, BD@42&@*4HFb & 2@>,, J*@$D,>>@6 BD4 &H@D@< BD@N@*, (5).)@24DJ`V4, @H&,DFH4b (8) @H8:`R.>>@(@ D"FF,4&"`V,(@ *4F8" *@:0>Z $ZH\ @BbH\ @HD,(J:4D@&">Z & F@@H&,HFH&44 F D,(J:4D@&@R>@6 H"$:4P,6.

I7I1I=3+:
G"8 8"8 8"R,FH&@ D"FBD,*,:,>4b J*@$D,>46 8@:,$:,HFb & 2"&4F4<@FH4 @H F@DH" J*@$D,>46, >,@$N@*4<@ BD4 4FB@:\2@&">44 <"T4>Z F@ V4H8@<-@(D">4R4H,:,< >" &>,F,>44 J*@$D,>46 >" 8D"` B@:b &Z$4D"H\ H"8@, B@:@0,>4, V4H8", BD4 8@H@D@< $J*,H BD,*@H&D"V"H\Fb &Z:,H (D">J: J*@$D,>46 2" 8D"6 B@:b (A 4 B).]H@ 2"&4F4H @H 8"R,FH& 4FB@:\2J,<ZN %"<4 <4>,D":\>ZN J*@$D,>46, " H"80, @H D"$@R,6 T4D4>Z &>,F,>4b 4 N"D"8H,D4FH484 &,HD".

%>,F,>4, >" 8D"` B@:b *&J<b *4F8"<4
AC3 ?)=?; AC?M?)+E? U3G7?;-?'CI=3Q3G+9+; (<,H@* B)

- AD4 B,D&@< BD@N@*, J (D">4PZ B@:b (3) 4>H,D&": <,0*J HD"8H@D@< 4 8D",< B@:b *@:0,> F@FH"&:bH\ BD4$:424H,:\>@ 3 **< (<"T4>" @F>"V,>" V4H8@<-@(D">4R4H,:,<, " &": @H$@D" <@V>@FH4 &D"V",HFb BD4** 400 **@$./ <4>)**.
- **I <"T4>Z B@F:, D"$@HZ >" 8D"` B@:b &@FFH">"&:4&"`H D,(J:4D@&84 *:b 4FB@:\2@&">4b & @F>@&>@< D,04<,:**)@24DJ`V4, @H&,DFH4b (8) @H8:`R.>>@(@ D"FF,4&"`V,(@ *4F8" *@:0>Z $ZH\ @BbH\ @HD,(J:4D@&">Z & F@@H&,HFH&44 F D,(J:4D@&@R>@6 H"$:4P,6.
- %ZB@:>b`H &H@D@6 BD@N@* & 4>H,D&":, B@:@&4>Z D"$@R,6 T4D4>Z &>,F,>4b @H 8D"b B@:b (6). %Z$D">>J` D"$@RJ` T4D4>J &>,F,>4b 4 JFH">@&:,>>J` T4D4>J D"FF,4&">4b F@ND">b`H! IFH">@&:,>>J` T4D4>J D"FF,4&">4b <@0>@ D"2<,H4H\ 8@:ZT8"<4.

I7I1I=3+:
)@24DJ`V4, @H&,DFH4b (A 4 B) *@:0>Z $ZH\ B@:>@FH\` 2"8DZHZ 2"F:@>8"<4 4 & ^H@< B@:@0,>44 2"F:@>84 >,6:@>@&"b T8":" D,(J:4D@&@R>@6 TH">(4 (8) *@:0>" >"N@*4H\Fb >" B@24P44 0. A@ 0,:">4` B@HD,$4H,:b <"T4>" <@0,H $ZH\ J8@<B:,8H@&">" (4*D"&:4R,F84< *&JNN@*@&Z< 8D">@< 2x2 (F<. «?$@DJ*@&">4, *@B@:>4H,:\>@,», F.32), F B@<@V\` 8@H@D@(@ <@0>@ B@ @H*,:\>@FH4 2"8DZ&"H\ :,&J` 4:4 BD"&J` 2"F:@>8J *@24DJ`V,(@ JFHD@6FH&".

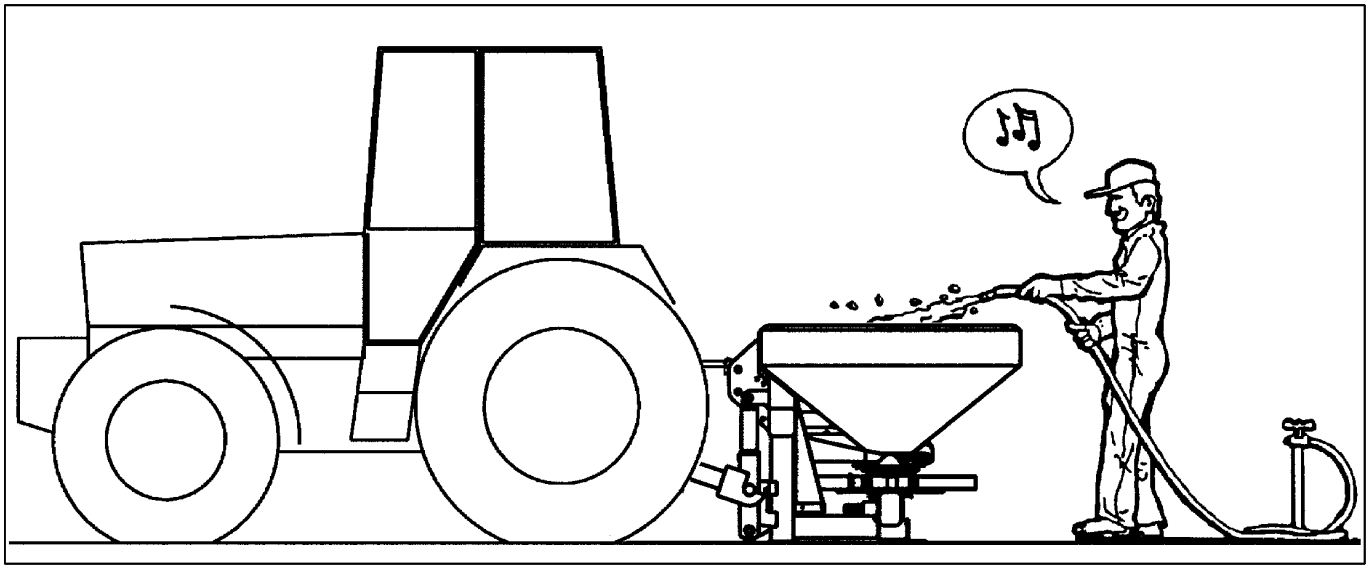

?Q3EG7!, E+C%3E 3 G+M=3Q+E7?+ ?#E9I / 3%!=3+

+0,*>,&>@:

#J>8,D <"T4>Z >,@$N@*4<@ B@F:, D"$@HZ ,0,*>,&>@ @R4V"H\ @H J*@$D,>46. ?FH"H84 J*@$D,>46 <@(JH &ZBJF8"H\Fb & <@>H4DJ,<Z6 J:"&:4&" ` V46 $J>8,D R,D,2 :,&Z6 4:4 BD"&Z6 D"FF,4&" ` V46 *4F8. ; "T4>J @$<Z&" `H &@*@6 F@ T:">(". **AD4 BD4<,>,>44 @R4FH84 &ZF@8@(@ *"&:,>4b >,:\2b >"BD"&:bH\ FHDJ` &@*Z >,B@FD,*FH&,>>@ >" B@*T4B>484 4 F":\>484 BD4&@*@&.** ; "T4>J >,@$N@*4<@ &ZFJT4H\ 4 F<"2"H\ >, F@*,D0"V4< 84F:@HZ 04D@< (& R"FH>@FH4, @H8DZHZ, $,2 2"V4H>@(@ B@8DZH4b <,FH"). G"80, @$D"$@H"6H, >,$@:\T4< 8@:4R,FH&@< F<"284 >"DJ0>Z, FH@D@>Z B@*T4B>48@& BD4&@*@&.

%=3 ; I=3+: AD4 @R4FH8, <"T4> @$@DJ*@&">4,< &ZF@8@(@ *"&:,>4b >4 & 8@,< F:JR", >, BD4<,>b6H, *"&:,>4, $@:,, R,< 3 $"D".

?AIE=?EG[: +F:4 %Z >"<,D,&",H,F\ B@B"FH\ B@* D"FF,4&"H,:\, RH@$Z 2"<,>4H\ 2J$R"HZ, 8@:,F" 4:4 &ZB@:>4H\ H"< *DJ(4, D"$@HZ, H@ @$b2"H,:\>@ B@FH"&\H, <"T4>J >" @B@DZ.

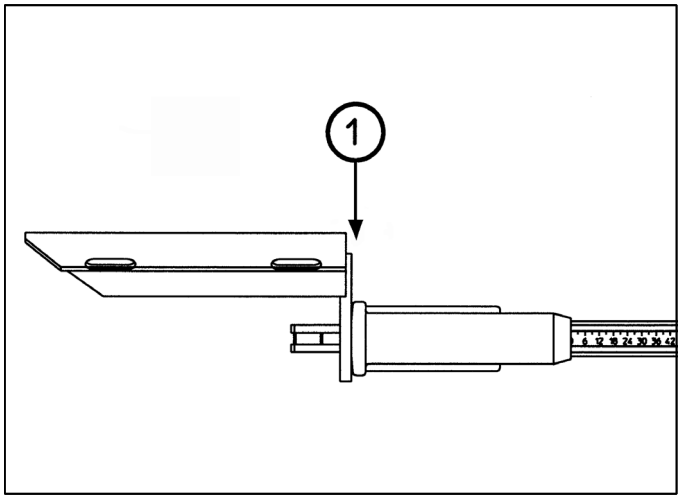

?*4> D"2 & F,2@>:

; Z D,8@<,>*J,< %"<, RH@$Z %Z @F>@&"H,:\>@ BD@&,D4:4 D"FF,4&"D,:\ <4>,D":\>ZN J*@$D,>46 B,D,* >"R":@< F,2@>" B@:,&ZN D"$@H 4:4 B@F:, &>,F,>4b J*@$D,>46 >" B:@V"*4 500 (".) ,L,8H>Z, 4 B@&D, 0*,>>Z, *,H":4 >,@$N@*4<@ @HD,<@>H4D@&"H\ 4:4 2"<,>4H\, & D,2J:\H"H, R,(@ 42$, 04H, @H8"2@& & H,R,>4, F,2@>".**

E<"2Z&">4, 4 @$F:J04&">4, 8"D*">>@(@ &":" *@:0>@ &ZB@:>bH\Fb F@(:"F>@ J8"2">4b< 42(@H@&4H,:b; &ZB@:>b6H, F<"2@R>Z, D"$@HZ, H,< >, <,>,,, R"V,, ,F:4 8"D*">>Z6 &": R"FH@ ^8FB:J"H4DJ,HFb BD4 J(:, $@:,, R,< 20 **(D"*JF@&.**

KJ>8P4b BD,*@ND">4H,:\>@6 <JLHZ H"80, *@:0>" BD@&,DbH\Fb @*4> D"2 & F,2@>, 8"8 @B4F">@ >" FHD">4P, 11.

%=3 ; I=3+:

A@F:, B,D&ZN 8 **R"F@& D"$@HZ** >,@$N@*4<@ BD@8@>HD@:4D@&"H\ 8"8 F@@H&,HFH&J,H >"FHD@68, D,(J:4D@&8" *@24DJ`V,(@ JFHD@6FH&", 8"8 @B4F">@ >" **FHD">4P,** 28, 4 D,(J:4D@&8" @H&,DFH4b &ZN@*" J*@$D,>46, 8"8 @B4F">@ >" **FHD">4P,** 29.

%"0>@ BD@8@>HD@:4D@&"H\, & BD"&4:\>@< :4 B@:@0,>44 >"N@*4HFb JB@D D,(J:4D@&@R>@6 TH">(4 (1). ; Z D,8@<,>*J,< B@&H@DbH\ ^H@H 8@>HD@:\ 8"0*Z6 F,2@> 4:4 R,D,2 100 R"F@& D,04<" D"$@HZ.

?AIE=?EG[: A,D,* D"$@H"<4 B@ H,N>4R,F8@<J @$F:J04&">4` 4:4 D,<@>HJ D"FF,4&"H,:b & HD"8H@D, BD4&@*bH & *,6FH&4, FH@b>@R>Z6 H@D<@2 4 &F,(*" &Z8:`R"`H *&4("H,:\. EH"&\H, JB@D B@* B,D,*>``R"FH\ <"T4>Z, RH@$Z BD,*JBD,*4H\ ,. B"*,>4,. A,D,* F&"D@R>Z<4 D"$@H"<4 <"T4>" *@:0>" @F>@&"H,:\>@ @R4V"H\Fb: BD4 >":4R44 >4HD@> F@*,D0"V4N <4>,D":\>ZN J*@$D,>46 FJV,FH&J,H ?AIE=?EG[%1CY%I!

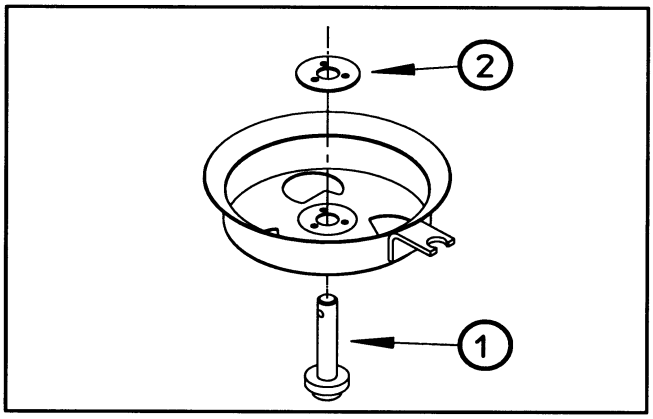

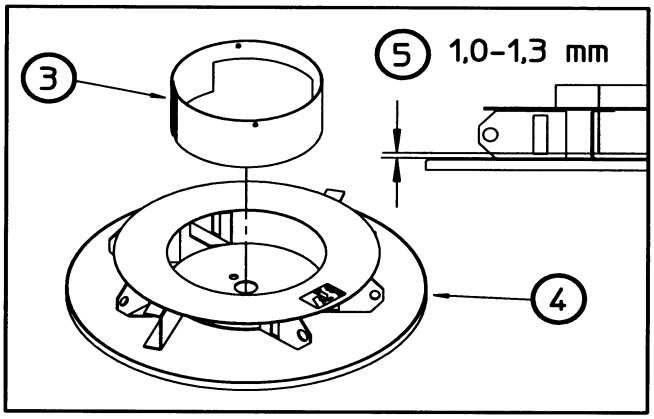

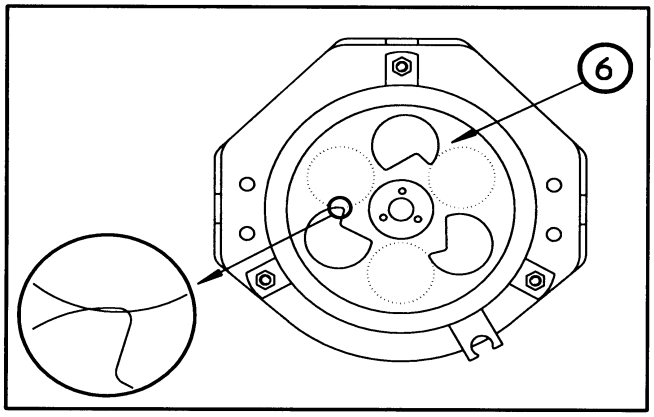

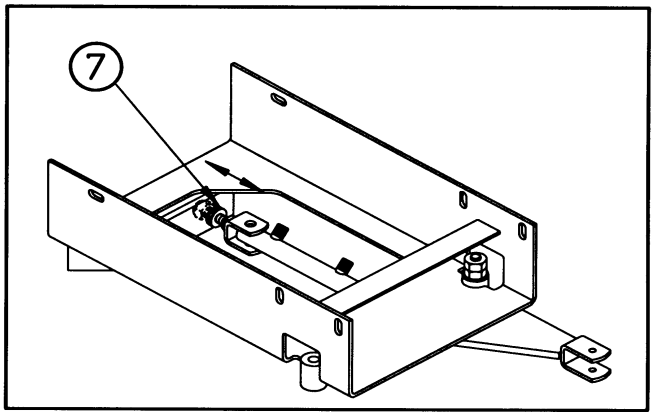

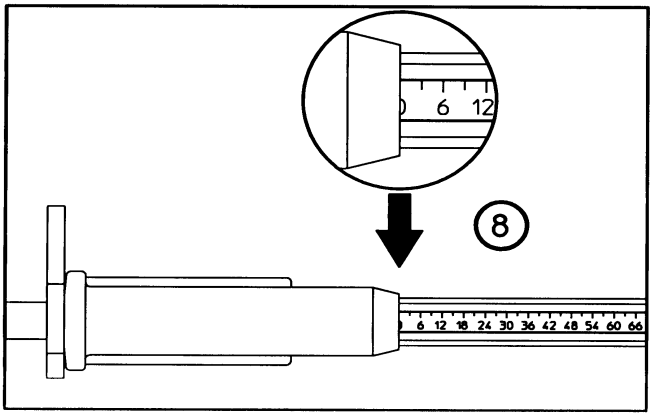

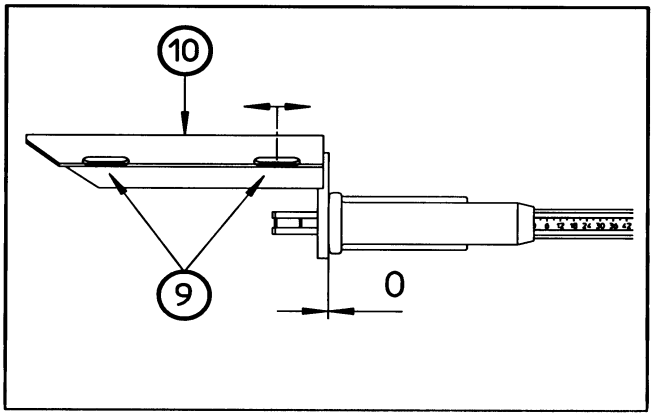

C+'I93C?%7I 1IE9?=73)?13CI _ U+'? IEGC?5EG%I

- ?$" *@24DJ` V4N JFHD@6FH&" *@: 0>Z >"N@*4H\Fb H@R>@ >"* D"FF,4&" ` V4<4 *4F8"<4. AD@&,D\H,, @*4>"8@&@, :4 D"FFH@b>4, <, 0*J BD4&@*>Z< &": @< (1) 4 <@>H4DJ,<Z< 8@:\P@< (2) F@ &F,N FH@D@>; BD4&@*>@6 &": 4 8@:\P@ *@: 0>Z B,D,<,V"H\Fb *DJ(@H>@F4H,:\>@ *DJ(" F&@$@*>@, $,2 2",*">46.
- AD@&,D\H, H"80,, >, 8"F"`HFb :4 D"FF,4&"` V4N *4F8@& &ZBJF8>Z, HDJ$Z *@24DJ` V,(@ JFHD@6FH&". 1"2@D (5) <, 0*J &ZBJF8>@6 HDJ$@6 (3) 4 D"FF,4&"` V4< *4F8@< (4) *@: 0,> F@FH"&:bH\ @H 1,0 *@ 1,3 << F@ &F,N FH@D@>.]H@H 2"2@D :JRT, &F,(@ JFH">"&:4&"H\ F B@<@V\` VJB".

7?=GC?9[3 C+'I93C?%7I)?13CI _ U3M ?G%+CEG35

- 1"8D@6H, B@:>@FH\` 2"F:@>84 *@24DJ` V,(@ JFHD@6FH&" (4*D"&:48@6 HD"8H@D" (TH@84 P4:4>*D@& *@: 0>Z $ZH\ B@:>@FH\` &Hb>JHZ<4). )@24DJ` V4, @H&,DFH4b *@: 0>Z $ZH\ BD"8H4R,F84 B@:>@FH\` 2"8DZHZ, ^H@ 2>"R4H, RH@ BD@F<"HD4&",HFb <":,>\846 BD@F&,H (F&,H@&"b V,:\) (6). +F:4 ^H@6 V,:4 >,H, H@ P4:4>*D >,@$N@*4<@ `FH4D@&"H\ B,D,<,V,>4,< ("684 (7), *@ H,N B@D B@8" *@24DJ` V,, @H&,DFH4, $J*,H B,D,8DZH@ F F@ND">,>4,< J8"2">>@6 V,:4.

A@&H@D>Z< @H8DZH4,< 4 2"8DZH4,< *@24DJ` V,6 2"F:@>84 8@>HD@:4DJ`H, F@@H&,HFH&J,H :4 L"8H4R,F8"b D,(J:4D@&8" J8"2">>Z< HD,$@&">4b<.

- IFH">"&:4&"`H T8":J D,(J:4D@&@R>@(@ DZR"(" (8) >" B@24P44 0. 1" FR.H B,D,<,V,>4b JB@D" (10) & B"2"N (9) <@0>@ D,(J:4D@&@R>Z6 DZR"(JFH">@&4H\ H"84< @$D"2@<, RH@ T8":" DZR"(" $J*,H >"N@*4H\Fb >" B@24P44 0, JB4D"bF\ H@R>@ & JB@D.

7D@<, H@(@, *@B@:>4H,:\>@ <@0>@ 8@>HD@:4D@&"H\, @H8DZ&"`HFb :4 *@24DJ` V4, @H&,DFH4b @*>@&D,<,>>@, 8"8 J8"2">@ >40,:

- C,(J:4D@&@R>Z6 DZR"(JFH">"&:4&"`H >" B@24P4` 36 4 @H8DZ&"`H *@24DJ` V4, @H&,DFH4b (4*D"&:48@6 HD"8H@D". ?H8:@>,>4, <, 0*J :,&Z< 4 BD"&Z< @H&,DFH4b<4 >, <@0,H BD,&ZT"H\ 0,5 <<.

I7I1I=3+: %"T FB,P4":\>Z6 H@D(@&Z6 B"DH>.D 2>",H BD"&4:", 8"8 &ZB@:>4H\ ^HJ D,(J:4D@&8J 4 8"8 ,. BD@8@>HD@:4D@&"H\.

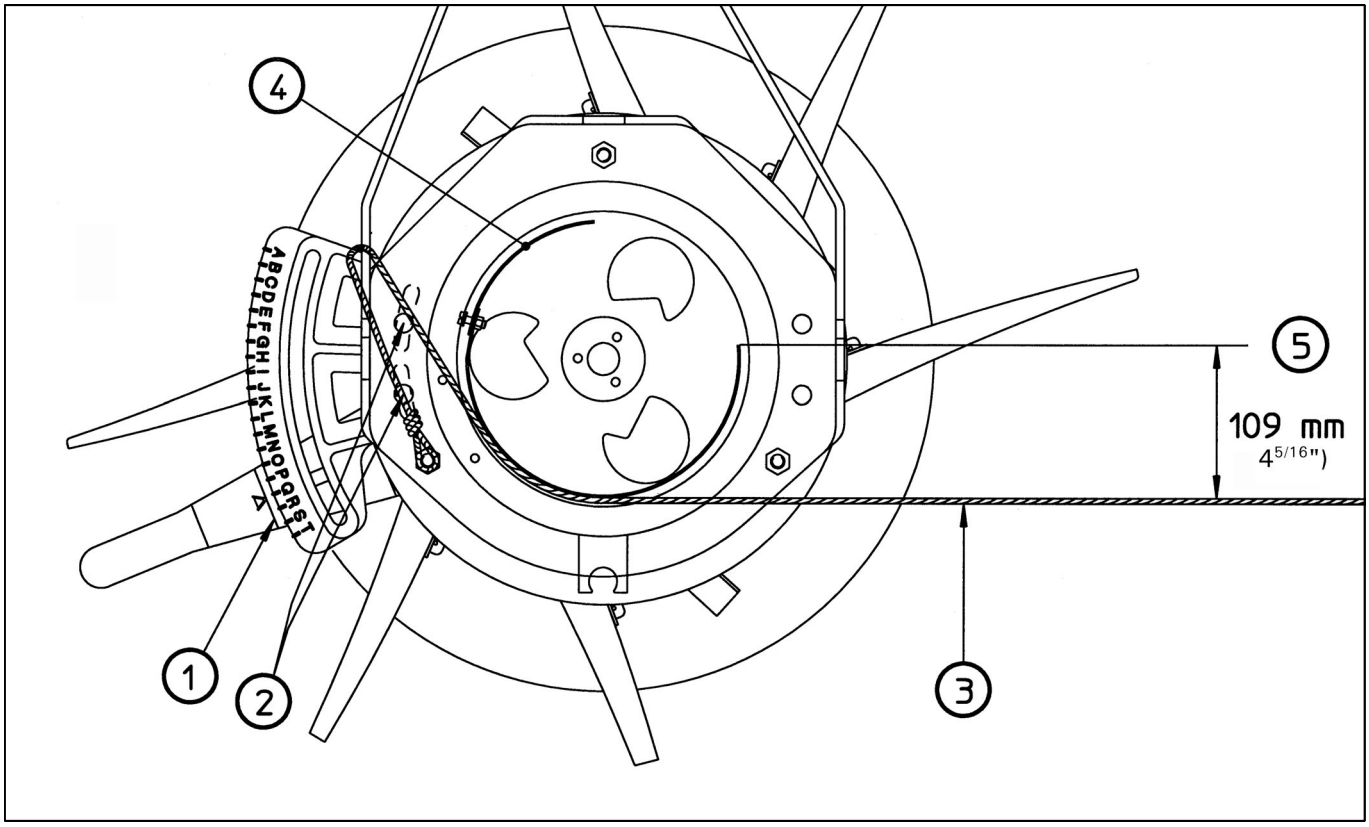

7?=GC?9[C+'I93C?%73 %YM?)=?'? ?G%+CEG3a
)?13CI _ U+'? IEGC?5EG%I

+F:4 >"*@ BD@8@>HD@:4D@&"H\ 4, BD4 >,@$N@*4<@FH4,
@HD,(J:4D@&"H\ B@:@0,>4, @$,4N &ZBJF8>ZN HDJ$ *@24DJ`V,(@
JFHD@6FH&", H@ F:,*J,H B@FHJB"H\ F:,*J`V4< @$D"2@<:

- E>"R":" D,(J:4DJ`H 2"F:@>8J *@24DJ`V,(@ JFHD@6FH&"
  (F<@HD4 " C+'I93C?%7I 1!E9?=73)?13CI _ U+'?
  IEGC?5EG%!" >" FHD">4P, 28).
- IFH">"&:4&"`H DZR"(D,(J:4D@&84 B@:@0,>4b &ZN@*>@(@
  @H&,DFH4b >" B@24P4` 0 (1).
- %4>HZ (2) @F:"$:b`H.
- % &ZBJF8>ZN HDJ$"N (4) B@<,V"`H >4H\ (3).
- 3>H,D&": (5) <,0*J >4H\` 4 2"*>4< 8D",< (@$D,2@<)
  @H&,DFH4b & &ZBJF8>Z, HDJ$Z *@:0,> F@FH"&:bH\ 109 <<.
- %4>HZ (2) F>@&" B@*04<"`H.

]H" D,(J:4D@&8" *@:0>" BD@42&@*4H\Fb 8"8 >" :,&@<, H"8 4 >"
BD"&@< *@24DJ`V4N JFHD@6FH&"N.

I7I1I=3+:
%"T FB,P4":\>Z6 H@D(@&Z6 B"DH>.D 2>",H BD"&4:", 8"8
&ZB@:>4H\ ^HJ D,(J:4D@&8J 4 8"8 ,. BD@8@>HD@:4D@&"H\.

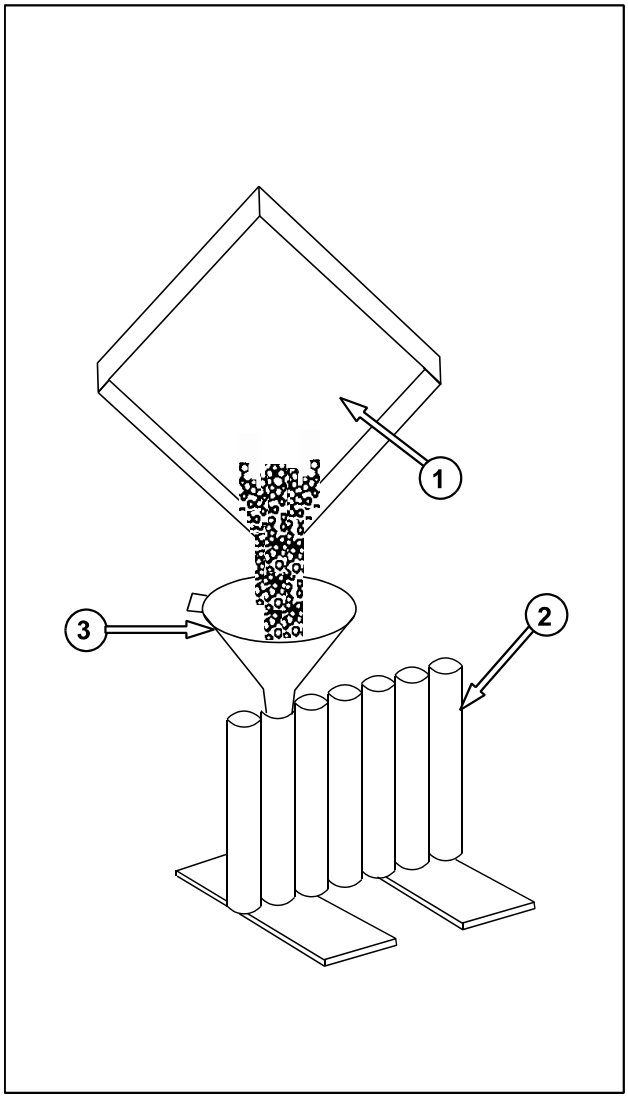

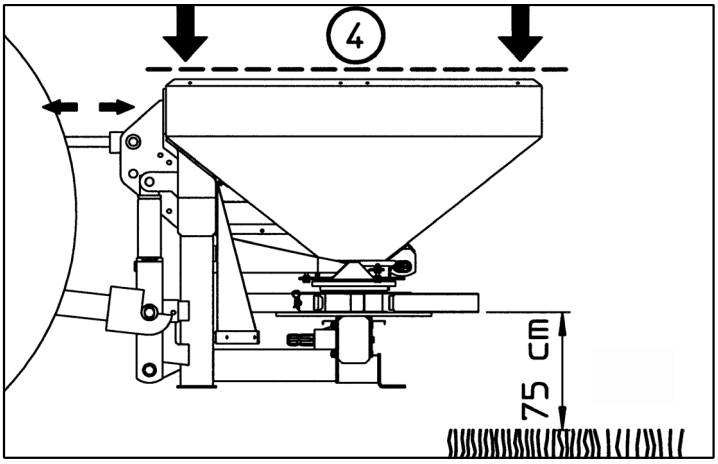

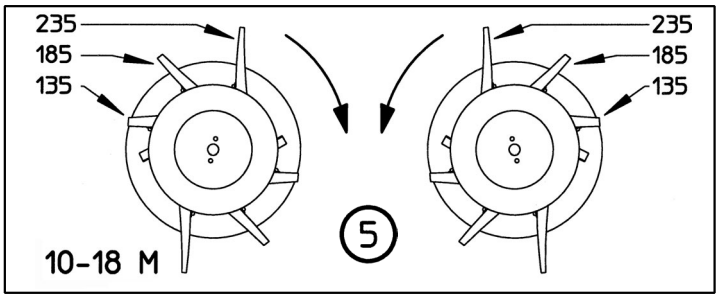

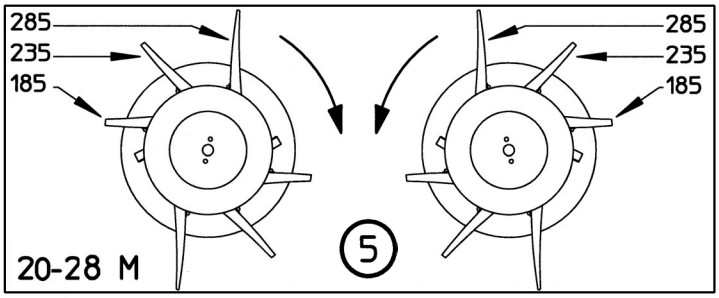

G+EGY)9a ?O+=73 7IQ+EG%I CIEAC+)+9+=3a I)?#C+=35 (F *@B@:>4H,:\>Z< @$@DJ*@&">4,<)

32-2" $@:\T4N D"2:4R46 <,0*J @H*,:\>Z<4 B"DH4b<4 J*@$D,>46 4>@(*" *@:0>" BD@&@*4H\Fb D,(J:4D@&8" D"$@R,6 T4D4>Z D"FBD,*,:,>4b J*@$D,>46 D"FF,4&"H,:,<.):b ^H@(@ %Z <@0,H, @$D"V"H\Fb 8 BD,*BD4bH4` B@ H,FH4D@&">4` D"FF,4&"H,:,6, 8@H@D@, & %"T,6 @$:"FH4 BD@&@*4H 8@:4R,FH&,>>Z, H,FHZ.]H4 L4D<Z FB,P4":424D@&">Z >" @$F:J04&">44 <"T4> *:b &>,F,>4b J*@$D,>46 4 D"FB@:"(" `H $@:\T4< @BZH@< D"$@HZ F D"FF,4&"H,:b<4 4 &4*"<4 J*@$D,>46. ;Z D,8@<,>*J,<, RH@$Z BD4 &@2>48>@&,>44 BD@$:,< 4 &@BD@F@& F&b2Z&":4F\ F ^H4<4 @D(">42"P4b<4.

?*>"8@ %Z <@0,H, 8@>HD@:4D@&"H\ F&@6 D"FF,4&"H,:\ J*@$D,>46 H"80, F"<4.):b ^H@(@ BD,*:"(",HFb *@B@:>4H,:\>@, @$@DJ*@&">4, *:b &ZB@:>,>4b "H,FH" *@2Z &>,F,>4b J*@$D,>46".]H@ @$@DJ*@&">4, J*@&:,H&@Db,H &F,< ,&D@B,6F84< HD,$@&">4b< 4 BD,*B4F">4b<.

%>4<">4,:
?$ZR>@ BD"&4:\>"b D,(J:4D@&8" <@0,H BD@42&@*4H\Fb F 4FB@:\2@&">4,< D,(J:4D@&@R>ZN H"$:4P, ,F:4 BD4<,>bH\ F@&<,FH>@ B@FH"&:b,<Z, 42<,D4H,:\>Z, BD4$@DZ 4 ,F:4 $Z: @BD,*,:,> J*,:\>Z6 &,F J*@$D,>46. %Z$D">>"b B@ ^H4< *">>Z< D,(J:4D@&@R>"b H"$:4P" *@:0>" F:J04H\ &F,(*" 4FN@*>Z< BJ>8H@< *:b "H,FH" *@2Z &>,F,>4b J*@$D,>46".

):b &ZB@:>,>4b "H,FH" *@2Z &>,F,>4b J*@$D,>46" HD,$J,HFb F:,*J`V,,:
- 7 B@**@>@& (1)
- 7 D,T,H@8
- 7 42<,D4H,:\>ZN HDJ$@8 (2)
- 1 &@D@>8" (3)
- CJ8@&@*FH&@ B@ ^8FB:J"H"P44

%>4<">4,:
A@(@*" @8"2Z&",H $@:\T@, &:4b>4, >" N"D"8H,D4FH48J D"FBD,*,:,>4b J*@$D,>46.]H@ @H>@F4HFb H"80, 4 8 «G,FHJ *@2Z &>,F,>4b J*@$D,>46».

I7I1I=3a 7 G+EGI)?1Y %=+E+=3a I)?#C+=35
- AD@&,D\H, R"FH@HJ &D"V,>4b &":" @H$@D" <@V>@FH4 HD"8H@D".
- AD@&,D\H, B@:@0,>4, :@B"H@8 >" D"FF,4&"`V4N *4F8"N (5).
- AD@&,D\H, BD"&4:\>@FH\ >"&,F84 D"FF,4&"H,:b >" HD"8H@D (4) ((@D42@>H":\>@FH\ 8D@<@8 $J>8,D", &ZF@H" D"FB@:@0,>4b >"* B@&,DN>@FH\` 4 *D.).
- E8@D@FH\ &,HD" BD4 H,FH4D@&">44 >, *@:0>" BD,&ZT"H\ 3 </c.
- =48@(*" >,:\2b BD@&@*4H\ H,FH >" @BD,*,:,>4, *@2Z &>,F,>4b BD4 *@0*,, H"8 8"8 &F:,*FH&4, ^H@(@ J*@$D,>4, & B@**@>"N <@0,H BD4:4B>JH\, RH@ FL":\F4L4P4D@&":@ $Z 42<,D,>4b.
- G,FH *@2Z &>,F,>4b J*@$D,>46 >48@(*" >,:\2b BD@&@*4H\ BD4 8D"6>, &ZF@8@6 &:"0>@FH4 &@2*JN", H"8 8"8 4 &F:,*FH&4, ^H@(@ J*@$D,>4, & B@**@>"N <@0,H BD4:4B>JH\, RH@ FL":\F4L4P4DJ,H D,2J:\H"HZ 42<,D,>46.

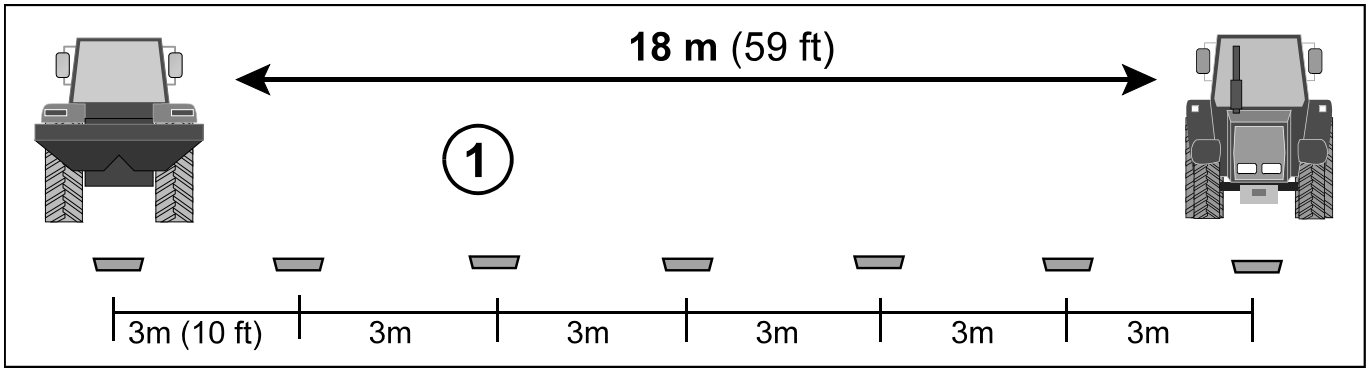

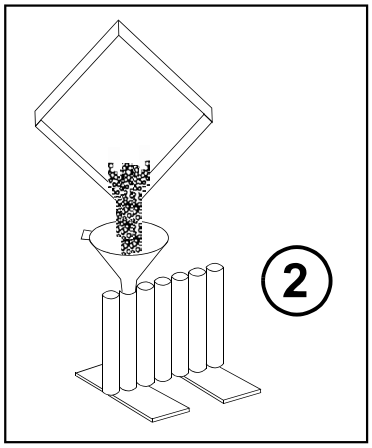

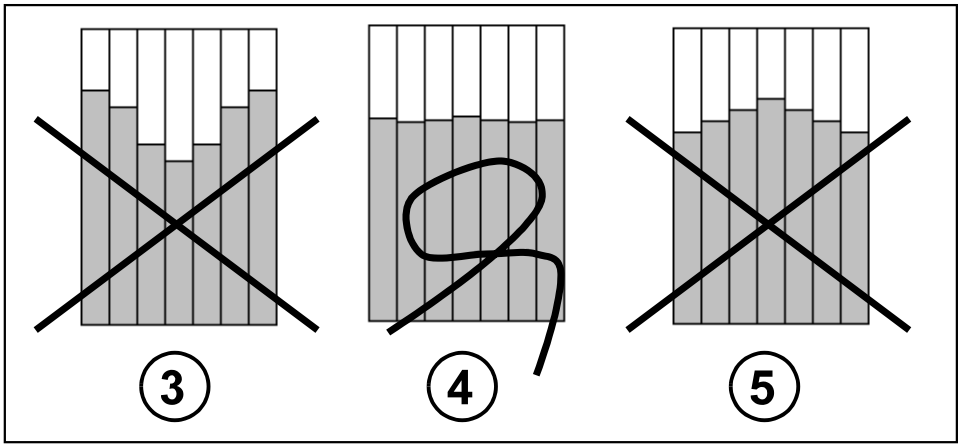

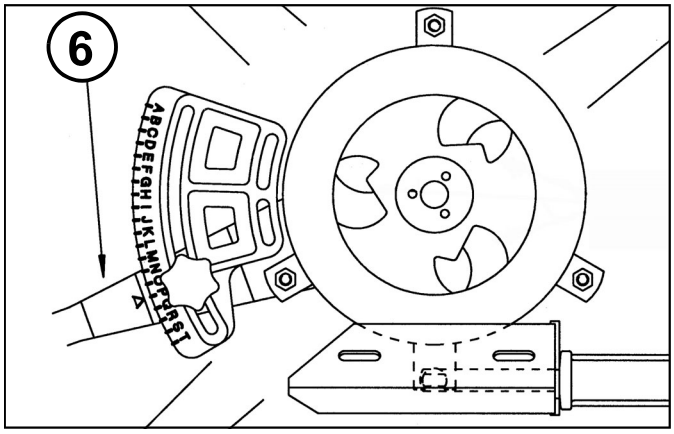

AC?%+)+=3+ G+EGI =I ?AC+)+9+=3+ MICI7G+C3EG373 CIEAC+)+9+=3a I)?#C+=35

- %8:"*Z&" `H D,T,H84 & B@**@>Z.
- 32<,D4H,:\>Z, HDJ$84 &ZFH"&:b`H @*>J &@2:, *DJ(@6.
- IFH">"&:4&" `H B@**@> 1 <,0*J 8@:.F"<4 HD"8H@D" BD4 B,D&@< BD@N@*,; B@**@> 7 JFH">"&:4&" `H & 2@>, <,0*J 8@:.F"<4 HD"8H@D" F<,0>@(@ BD@N@*".
- ?FH":\>Z, 5 B@**@>@& JFH">"&:4&" `H F D"&>@<,D>Z< 4>H,D&":@< *DJ(@H *DJ(" <,0*J F<,0>Z<4 BD@N@*"<4 HD"8H@D" (1).
- GD"8H@D>Z6 "(D,("H >"R4>",H *&40,>4, & B,D&@< BD@N@*, 4 2" >,F8@:\8@ <,HD@& *@ *@FH40,>4b :4>44 B@**@>@& &8: `R" `H D"FF,4&"H,:\ & D"$@HJ. +F:4 D"$@R"b T4D4>" &>,F,>4b F@FH"&:b,H, 8 BD4<,DJ, 18 <, H@ BD@P,FF D"FF,4&">4b J*@$D,>46 <@0,H $ZH\ @8@>R,> H@:\8@ B@F:, H@(@, 8"8 "(D,("H $J*,H >"N@*4H\Fb >" D"FFH@b>44 <4>4<J< 18 < @H B@**@>@&.
- E<,0>Z6 BD@N@* 8 B@**@>"< &ZB@:>b`H & @$D"H>@< >"BD"&:,>44. AD4 ^H@< B,D,* 4 2" B@**@>@< 7 >" @*4>"8@&@6 *4FH">P44 @H B@**@>" F@@H&,HFH&,>>@ &8: `R" `H 4 &Z8: `R" `H D"FF,4&"H,:\.
- I*@$D,>4b 42 8"0*@(@ B@**@>" B,D,FZB" `H R,D,2 &@D@>8J & F@@H&,HFH&J` VJ` 42<,D4H,:\>J` HDJ$8J (2). ID@&>4 J*@$D,>46 &@ &F,N 42<,D4H,:\>ZN HDJ$8"N BD,*FH"&:b`H F@$@6 L"8H4R,F8J` N"D"8H,D4FH48J D"FBD,*,:,>4b J*@$D,>46.

?O+=7I MICI7G+C3EG373 CIEAC+)+9+=3a

ID@&,>\ J*@$D,>46 & HDJ$8"N >, *@:0,> @H:4R"H\Fb $@:\T, R,< 15 % @H FD,*>,6 &,:4R4>Z.
AD4 @P,>8, &@2<@0>@ &FHD,H4H\Fb F HD,<b F4HJ"P4b<4:

(3) %@(>JH"b &>42 N"D"8H,D4FH48" D"FBD,*,:,>4b J*@$D,>46. S4D4>" D"FBD,*,:,>4b @R,>\ J28"b. 1" HD"8H@D@< D"FBD,*,:b,HFb 42:4T>,, 8@:4R,FH&@ <4>,D":\>ZN J*@$D,>46. M"D"8H,D4FH48J D"FBD,*,:,>4b J*@$D,>46 <@0>@ J:JRT4H\ BJH.< B@FH,B,>>@(@ B,D,<,V,>4b DZR"(" D,(J:4D@&84 B@:@0,>4b &ZBJF8>ZN HDJ$ *@24DJ` V,(@ JFHD@6FH&" R,D,2 *&" *,:,>4b T8":Z & >"BD"&:,>44 $J8&Z A (6), B@F:, R,(@ >"*@ B@&H@D4H\ H,FH.
(4) 7@DD,8H>"b N"D"8H,D4FH48" D"FBD,*,:,>4b J*@$D,>46. ?H8:@>,>4b & JD@&>bN J*@$D,>46 & HDJ$8"N <,>,, R,< 15 %. %"T D"FF,4&"H,:\ @HD,(J:4D@&"> BD"&4:\>@.
(5) %ZBJ8:"b &&,DN N"D"8H,D4FH48" D"FBD,*,:,>4b J*@$D,>46. S4D4>" &>,F,>4b J*@$D,>46 F:4T8@< $@:\T"b. ?R,>\ $@:\T@, B,D,8DZH4, JR"FH8" BD4 F<,0>ZN BD@N@*"N, 2" HD"8H@D@< D"FBD,*,:b,HFb >,*@FH"H@R>@, 8@:4R,FH&@ <4>,D":\>ZN J*@$D,>46. M"D"8H,D4FH48J D"FBD,*,:,>4b J*@$D,>46 <@0>@ J:JRT4H\ BJH.< B@FH,B,>>@(@ B,D,<,V,>4b DZR"(" D,(J:4D@&84 B@:@0,>4b &ZBJF8>ZN HDJ$ *@24DJ` V,(@ JFHD@6FH&" R,D,2 *&" *,:,>4b T8":Z & >"BD"&:,>44 $J8&Z G (6), B@F:, R,(@ >"*@ B@&H@D4H\ H,FH.

I7I1I=3+:
; 4>4<":\>"b *@2" &>,F,>4b BD4 H,FH4D@&">44 >" @BD,*,:,>4, N"D"8H,D4FH484 D"FBD,*,:,>4b J*@$D,>46 *@:0>" F@FH"&:bH\ 250 8(/(". +F:4 0,:",<"b *@2" <,>\T, J8"2">>@6, H@ H,FH *@:0,> B@&H@DbH\Fb *@ H,N B@D, B@8" & B@**@>"N >, @8"0,HFb 8@:4R,FH&@ J*@$D,>46, F@@H&,HFH&J` V,, <4>4<":\>@6 *@2, &>,F,>4b BD4 H,FH4D@&">44 >" 8"R,FH&@ D"FBD,*,:,>4b (250 8(/(").

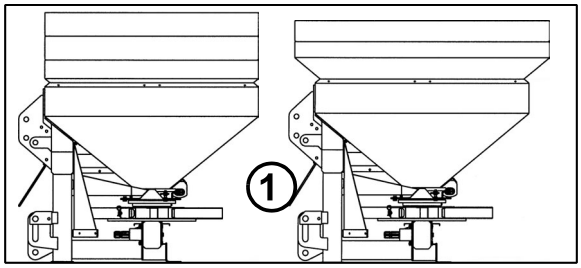

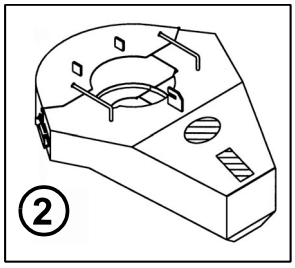

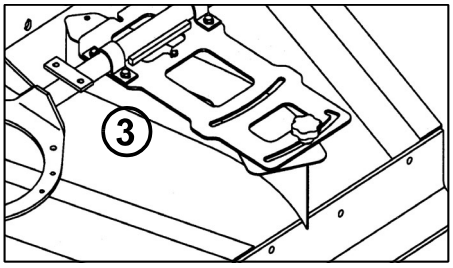

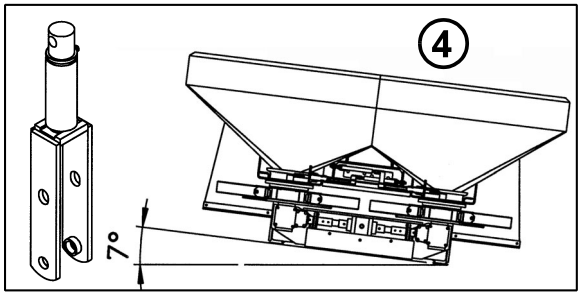

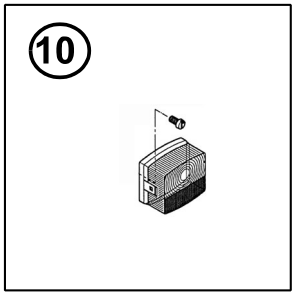

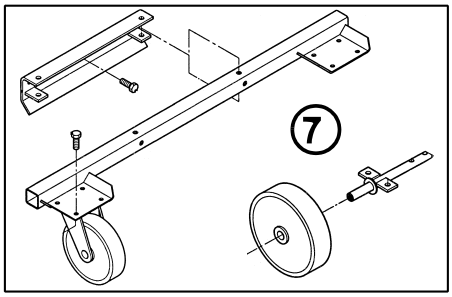

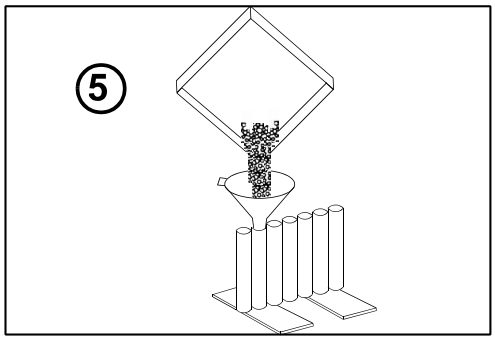

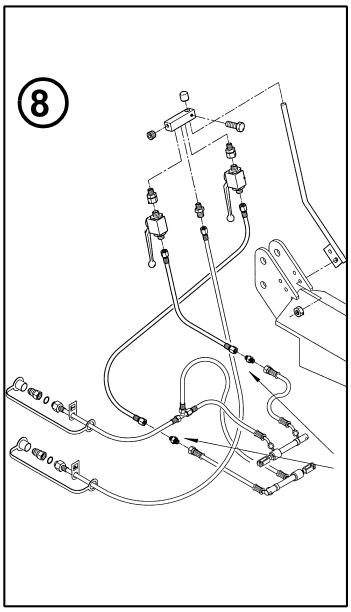

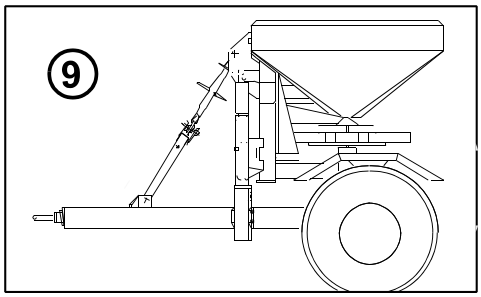

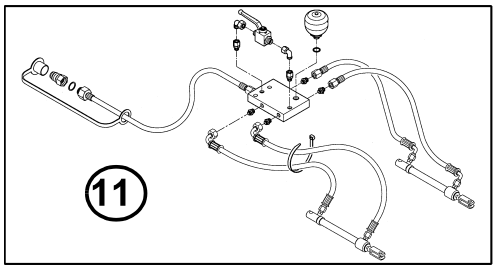

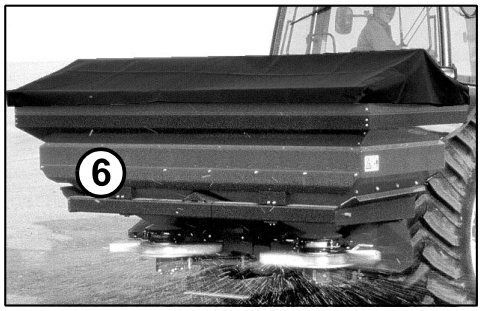

?#?CI)?%I=3+)?A?9=3G+9[=?+

1. =**"F"*84 $J>8,D" (FHD">4P"** 5) -A@*D@$>@FH4 F<@HD4H, & H,N>4R,F84N *">>ZN. =**J0**>@ F@$:`*"H\ <"8F4<":\>J` 2"(DJ2@R>J` &ZF@HJ 4 BD,*,:\>J` <"FFJ 2"(DJ**0**",<ZN & **$J>8**,D J*@$D,>46 BD4 ,(@ B@:>@< 2"B@:>,>44.

2. **I:"&:4&"`V46 $J>8,D (FHD">4P"** 17) - **):b** BD@$>@6 >"FHD@684 >,@$N@*4<@ *,<@>H4D@&"H\ :@B"H84 @*>@(@ 42 *&JN D"FF,4&"`V4N *4F8@& 4 @H8:`R4H\ BD4&@* *DJ(@(@ *4F8". 9`8 F @H&@D"R4&"`V,6Fb 8DZT8@6 <@**0**,H 4FB@:\2@&"H\Fb *:b 8@>HD@:b >"FHD@684 *@24D@&">4b 4 *:b @B@D@**0**>,>4b $J>8,D".

3. **U4H@8-@(D">4R4H,:\ (FHD">4P"** 24) -AD4<,>b,HFb BD4 &>,F,>44 J*@$D,>46 >" 8D"` B@:b BD4 D"$@H, @*>@(@ *4F8" 4 B@2&@:b,H H@R>@ F @*>@6 FH@D@>Z @(D">4R4H\ 8"DH4>J D"FF,4&">4b. U4H@8-@(D">4R4H,:\ <@**0**,H <@>H4D@&"H\Fb 8"8 FBD"&", H"8 4 F:,&".

4. **'4*D"&:4R,F846 P4:4>*D JFH">@&84 J(:" >"8:@>" <"T4>Z (FHD">4P"** 22) - %>,F,>4, J*@$D,>46 >" 8D"` B@:b F J<,>\T,>>@6 T4D4>@6 2"N&"H" (& J28@< BD@N@*,) <@**0**,H &ZB@:>bH\Fb BD4 *&JN D"$@H"`V4N *4F8"N 2" FR.H >"8:@>" D"FF,4&"H,:b. '4*D"&:4R,F84< P4:4>*D@< <@**0**>@ J*@$>@ >"8:@>bH\ <"T4>J 42 8"$4>Z HD"8H@D".

5. **7@<B:,8H @$@DJ*@&">4b *:b H,FH4D@&">4b (FHD">4P"** 30) - IFH">@&8@6 >,F8@:\84N J:"&:4&"`V4N B@**@>@& >" B@:, <@**0**>@ 8@>HD@:4D@&"H\ N"D"8H,D4FH48J D"FBD,*,:,>4b J*@$D,>46 >,B@FD,*FH&,>>@ & B@:,&ZN JF:@&4bN.

6. **G,>H $J>8,D"** - 1"V4V",H >"N@*bV4,Fb & $J>8,D, <4>,D":\>Z, J*@$D,>4b @H (Db24 4 &:"(4. G,>H :.(846 4 4< BD@FH@ J8DZ&"H\ &DJR>J` $J>8,D, " H"80, ,(@ :,(8@ F&@D"R4&"H\.

7. **GD">FB@DH>Z, 8@:.F"** - GD">FB@DH>Z, 8@:.F" @$:,(R"`H B,D,<,V,>4, &DJR>J` <"T4>Z, *,<@>H4D@&">>@6 F HD"8H@D".

8. **'4*D"&:4R,F846 *&JNN@*@&@6 8D">** 2x2 -AD4<,>b,HFb BD4 @*>@FH@D@>>,< &>,F,>44 J*@$D,>46 >" 8D"` B@:b F 4FB@:\2@&">4,< V4H8"-@(D">4R4H,:b. ;@**0**>@ BD,8D"V"H\ *@24D@&">4, :,&@(@ 4:4 BD"&@(@ D"FF,4&"`V,(@ *4F8" 42 8"$4>Z HD"8H@D". +F:4 HD"8H@D @F>"V,> *&J<b D"FBD,*,:4H,:b<4 *&@6>@(@ *,6FH&4b, H@ P4:4>*DZ 2"F:@>@8 *@24DJ`V,(@ JFHD@6FH&" <@(JH BD4&@*4H\Fb & *,6FH&4, H"80, B@ @H*,:\>@FH4 (F 4FB@:\2@&">4,< *@B@:>4H,:\>@(@ 8@<B:,8H" T:">(@&).

9. **7@:.F>Z6 N@*** -%48@> B@FH"&:b,H 8@:.F>Z6 N@* (T"FF4) F T4>"<4 B@ &Z$@DJ D"2<,D@< 11.5/80-15,3, 15.0/55-17 **4:4** 500/50-17, 8@H@DZ6 B@2&@:b,H BD4<,>bH\ D"FF,4&"H,:\ F $@:\T4< @$X,<@< $J>8,D" F $@:,, :,(84<4 HD"8H@D"<4. =**J0**>@ 4<,H\ & &4*J, RH@ BD4 4FB@:\2@&">44 8@:.F>@(@ N@*" 2"(DJ2@R>"b &ZF@H" &@2D"FH",H BD4<,D>@ >" 65 F<.

10. **?F&,V,>4,** - C"FF,4&"H,:\ <@**0**,H @F>"V"H\Fb @F&,H4H,:\>Z< @$@DJ*@&">4,<.

11. **'4*D"&:4R,F8@, @$@DJ*@&">4, @*>@FH@D@>>,(@ *,6FH&4b E** B@<@V\` (4*D"&:4R,F8@(@ "88J<J:bH@D" *"&:,>4b <@**0**>@ BD4&@*4H\ & *,6FH&4, 2"F:@>8J *@24DJ`V,(@ JFHD@6FH&" HD"8H@D>@6 (4*D@F4FH,<@6 @*>@FH@D@>>,(@ *,6FH&4b.

%?1 ; ? / =Y+ =+3EAC!%=?EG3 3 EA?E?#Y 3M IEGC!=+=3a

AD@$:,<"	AD4R4>"	EB@F@$Z JFHD">,>4b	EHD
?T4$@R>@, *@24D@&">4,	)@24D@&">4, JFH">@&:,>@ @T4$@R>@, >48"8@6 BD@$>@6 >"FHD@684 >, BD@&,*,>@	IFH">@&8J *@2Z &F,(*" 8@>HD@:4DJ6H, B@FD,*FH&@< BD@$>@6 >"FHD@684	17
	E:4T8@< $@:\T"b 4:4 F:4T8@< <":"b F8@D@FH\ *&40,>4b "(D,("H"	3FB@:\2J6H, *:b 8@>HD@:b F8@D@FH4 FB4*@<,HDZ 4:4 *"HR484 @$@D@H@&	14
	S4D4>" BD@N@*" (D"$@R"b T4D4>" &>,F,>4b) @T4$@R>"b	A,D,* D"FF,4&">4,< &F,(*" D"2<,R"6H, BD@N@*Z "(D,("H"	20
	7@<B:,8H *:b JFH">@&84 &>,F,>4b <":ZN *@2 JFH">@&:,> >,BD"&4:\>@	AD@&,D\H, D,(J:4D@&8J 8@<B:,8H" *:b JFH">@&84 &>,F,>4b <":ZN *@2	16
	=@&"b B"DH4b J*@$D,>46 D"FF,4&",HFb BD4 D,(J:4D@&8"N <"T4>Z >" &>,F,>4, BD,*Z*JV,6 B"DH44	7"R,FH&@ B"DH46 <4>,D":\>ZN J*@$D,>46 <@0,H FJV,FH&,>>@ D"2:4R"H\Fb 4 B@^H@<J >"*@ ,(@ &F,(*" 8@>HD@:4D@&"H\, " *@24DJ`V,, JFHD@6FH&@ 2">@&@ >"FHD"4&"H\	15
	="DJT,> B@H@8 J*@$D,>46	?F>@&"H,:\>@ @R4V"6H, <"T4>J B@F:, 8"0*@(@ BD4<,>,>4b. 32>@T,>>Z, B@*&40>Z, *,H":4 F&@,&D,<,>>@ 2"<,>b6H,	26
C"2>Z, *@2Z &>,F,>4b J*@$D,>46 :,&Z< 4 BD"&Z< *4F8@<	C,(J:4D@&@R>Z, TH">(4 8@:4R,FH&" J*@$D,>46 JFH">@&:,>Z B@-D"2>@<J	A,D,BD@&,D\H, JFH">@&8J D,(J:4D@&@R>ZN TH">(	14
	E<,V.> JB@D D,(J:4D@&@R>@6 TH">(4 8@:4R,FH&" J*@$D,>46	IFH">@&4H, JB@D B@->@&@<J	28
	A@H@8 J*@$D,>46 >" @*>@6 FH@D@>, >"DJT,>	?F>@&"H,:\>@ @R4V"6H, <"T4>J B@F:, 8"0*@(@ BD4<,>,>4b. 32>@T,>>Z, B@*&40>Z, *,H":4 F&@,&D,<,>>@ 2"<,>b6H,	25
E4:\>@, @$D"2@&">4, BZ:4 BD4 D"FF,4&">44 J*@$D,>46	=,&ZF@8@, 8"R,FH&@ J*@$D,>46 (F:4T8@< <>@(@ D"2DJT,>>ZN (D">J: 4 H. B.)	?$D"H4H,F\ 8 %"T,<J B@FH"&V48J J*@$D,>46. ; 4>,D":\>Z, J*@$D,>4b >,B@:>@P,>>Z, 4 >,J*@&:,H&@D4H,:\>@ ND">4:4F\	
	;>@(@ (D">J: D"2<,D@< <,>,, R,< 2 <<	?$D"H4H,F\ 8 %"T,<J B@FH"&V48J J*@$D,>46	15
	7@:4R,FH&@ @$@D@H@& D"FF,4&"`V4N *4F8@& F:4T8@< $@:\T@,	AD@8@>HD@:4DJ6H, 8@:4R,FH&@ @$@D@H@& &":" @H$@D" <@V>@FH4	13
	32<,:\R,>4, J*@$D,>46 B@*&40>Z<4 *,H":b<4 <"T4>Z. 1"F:@>8" *@24DJ`V,(@ JFHD@6FH&" $Z:" F:4T8@< *@:(@ 2"8DZH" BD4 &8:`R,>>@< &":, @H$@D" <@V>@FH4	%": @H$@D" <@V>@FH4 FD"2J 0, &Z8:`R"6H, B@F:, 2"8DZH4b 2"F:@>84 *@24DJ`V,(@ JFHD@6FH&", B@*&40>Z, *,H":4 8@>HD@:4DJ6H, >" &@2<@0>@FH\ B@&D,0*,>4b J*@$D,>46	19
?R,&4*>@, &>,F,>4, J*@$D,>46 B@:@F"<4	I*@$D,>4b >,&ZF@8@(@ 8"R,FH&"	AD,*B@FZ:8@6 *:b N@D@T,(@ D,2J:\H"H" &>,F,>4b b&:b,HFb, RH@ 80 % (D">J: J*@$D,>46 4<,`H *4"<,HD <,0*J 2 4 4,75 <<. 7@>HD@:4DJ6H, J*@$D,>4b 42<,D,>4,< 4N LD"8P4@>>@(@ F@FH"&"	15
	AD4<,>,>4, F<,F4 J*@$D,>46 (Blend).	IR4HZ&"6H,, RH@ BD4 T4D4>, D"FF,4&">4b $@:,, R,< 15 < F<,F4 J*@$D,>46 D"FBD,*,:b`HFb >,D"&>@<,D>@	
	=@&"b B"DH4b J*@$D,>46 D"FF,4&",HFb F D,(J:4D@&8"<4 <"T4>Z >" &>,F,>4, BD,*Z*JV,6 B"DH44	7"R,FH&@ B"DH46 <4>,D":\>ZN J*@$D,>46 <@0,H FJV,FH&,>>@ D"2:4R"H\Fb 4 B@^H@<J *@:0>@ &F,(*" 8@>HD@:4D@&"H\Fb, " *@24DJ`V,, JFHD@6FH&@ –B,D,>"FHD"4&"H\Fb	15
	3FB@:\2@&">4, >, F@@H&,HFH&J`V,6 D,(J:4D@&@R>@6 H"$:4PZ	C,(J:4D@&@R>J` H"$:4PJ >J0>@ &Z$4D"H\ & 2"&4F4<@FH4 @H D"2<,D" (D">J: 4 J*,:\>@(@ &,F" J*@$D,>46; 8@>HD@:4DJ6H, ^H4 B"D"<,HDZ	15
	C"FF,4&">4, J*@$D,>46 BD4 B:@N@6 B@(@*,	=,:\2b D"FF,4&"H\ J*@$D,>4b BD4 &ZF@8@6 &:"0>@FH4 &@2*JN", *@0*,, 8D"6>, &ZF@8@6 H,<B,D"HJD, 4 F4:\>@< &,HD, ($@:,, 5 </F)	20
	IFH">@&:,>@ @T4$@R>@, 2>"R,>4, B,D,8DZH4b	A,D,* D"FF,4&">4,< &F,(*" D"2<,R"6H, >" B@:, BD@N@*Z "(D,("H"	12
	;"T4>" >,BD"&4:\>@ >"&,T,>" >" HD"8H@D	AD@&,D\H,, F@$:`*,>" :4 (@D42@>H":\>@FH\ <"T4>Z & BD@*@:\>@< 4 B@B,D,R>@< >"BD"&:,>44 (,F:4 & D,(J:4D@&@R>ZN H"$:4P"N >, BD,*JF<@HD,>@ *DJ(@,); BD@8@>HD@:4DJ6H, &ZF@HJ D"FB@:@0,>4b D"FF,4&"`V4N *4F8@&	13
	C"$@R"b T4D4>" &>,F,>4b >,BD"&4:\>@ JFH">@&:,>"	7@>HD@:4DJ6H, BD"&4:\>@FH\ JFH">@&84 D,(J:4D@&@R>@6 TH">(4 >"BD@H4& $J8& (F:,&" 4 FBD"&") >" F,8H@D,, @F>"V,>4, :@B"H8"<4 4 8@:4R,FH&@ @$@D@H@& &":" @H$@D" <@V>@FH4	14
	32>@T,>>Z, D"FF,4&"`V4, :@B"H84 4:4 4N >,8@<B:,8H>@FH\	7@>HD@:4DJ6H, :@B"H84	17
	C"2:4R4b & *"&:,>44 T4> HD"8H@D"	7@>HD@:4DJ6H, *"&:,>4, & T4>"N	
	A"*,>4, R4F:" @$@D@H@& D"$@R4N @D(">@& 42-2" >,4FBD"&>@FH4 BD,*@ND">4H,:\>@6 <JLHZ	7@>HD@:4DJ6H, D"FF,4&"`V4, *4F84 >" <":ZN @$@D@H"N 4 BD@&,Db6H, BD,*@ND">4H,:\>J` <JLHJ, BD4 >,@$N@*4<@FH4 D,<@>H4DJ6H,	11

;"T4>" BD@42&@*4H @HR,H:4&Z6 B@FH@D@>>46 TJ<	C"FF,4&"`V4, *4F84 2"*,&"`H 2" &ZBJF8>Z, HDJ$Z *@24DJ`V,(@ JFHD@6FH&"  C"FF,4&"H,:\ @FH"&:,> BD4 &8:`R.>>@< &":, @H$@D" <@V>@FH4 C"FF,4&"`V4, *4F84 *,L@D<4D@&">Z, 4<,`H *4F$":">F =":4B">4, <4>,D":\>ZN J*@$D,>46 >" B@*&40>Z, *,H":4 4 /4:4 >" D"FF,4&"`V4, *4F84	?HD,(J:4DJ6H, B@:@0,>4, &ZBJF8>ZN HDJ$ (2"2@D @H 1,0 *@ 1,3 <<) =48@(*" >, @FH"&:b6H, D"FF,4&"H,:\ F>"B@:>,>>Z< $J>8,D@< 7@>HD@:4DJ6H, D"FF,4&"`V4, *4F84 >" >":4R4, B@&D,0*,>46 4 J8@<B:,8H@&">>@FH\ &F,<4 >,@$N@*4<Z<4 :@B"H8"<4 I*":4H, >":4BT4, @FH"H84 J*@$D,>46. ;"T4>J @F>@&"H,:\>@ @R4V"6H, B@F:, 8"0*@(@ 4FB@:\2@&">4b	28 19 15 26
?VJV",HFb F4:\>"b &4$D"P4b <"T4>Z	EC!1I %Y79 _ Q3G+%I9 ?G#?C! ;?U=?EG3! E4:\>Z6 *4F$":">F D"FF,4&"`V4N *4F8@&),L@D<4D@&">>Z,&":Z BD4&@*@&4:4B@&D,0*,>>Z, B@*&40>Z, *,H":4 ="DJT,>Z *@BJFH4<Z, 2>"R,>4b D"$@R4N J(:@& 8"D*">>@(@ &":"	AD,*@H&D"V"6H, B@&D,0*,>4b, JFHD">b6H, BD4R4>Z! 7@>HD@:4DJ6H, D"FF,4&"`V4, *4F84 4 D"FF,4&"`V4, :@B"H84 1"<,>4H, *,L@D<4D@&">>Z, &":Z BD4&@*@&, B@&D,0*,>>Z, B@*&40>Z, *,H":4 =, *@BJF8"H\ D"$@R46 J(@: 8"D*">>@(@ &":" $@:,, R,< 30 (D"*JF@&	 15 28 11

Руководство по зксплуатации

KVERNELAND NIEUW-VENNEP B.V.
Hoofdweg 1278
NL-2153 LR Nieuw-Vennep
The Netherlands

Prod. series nr 77151
Эффективный от ident.nr (PIN)
0001

70.050.405