MX210, MX230, MX255, MX285 Magnum Tractors

Parts Catalog

Rac 7-8631

CASE IH

MX210, MX230, MX255, MX285 Magnum Tractors

Parts Catalog

Rac 7-8631

CASE IH

Sectional Layout

General - 1

Engine- 2

Fuel System- 3

Electrical System - 4

Steering - 5

Power Train - 6

Brakes- 7

Hydraulics - 8

Chassis/Attachment - 9

Numerical Index - 10

How to Use Your Parts Catalog

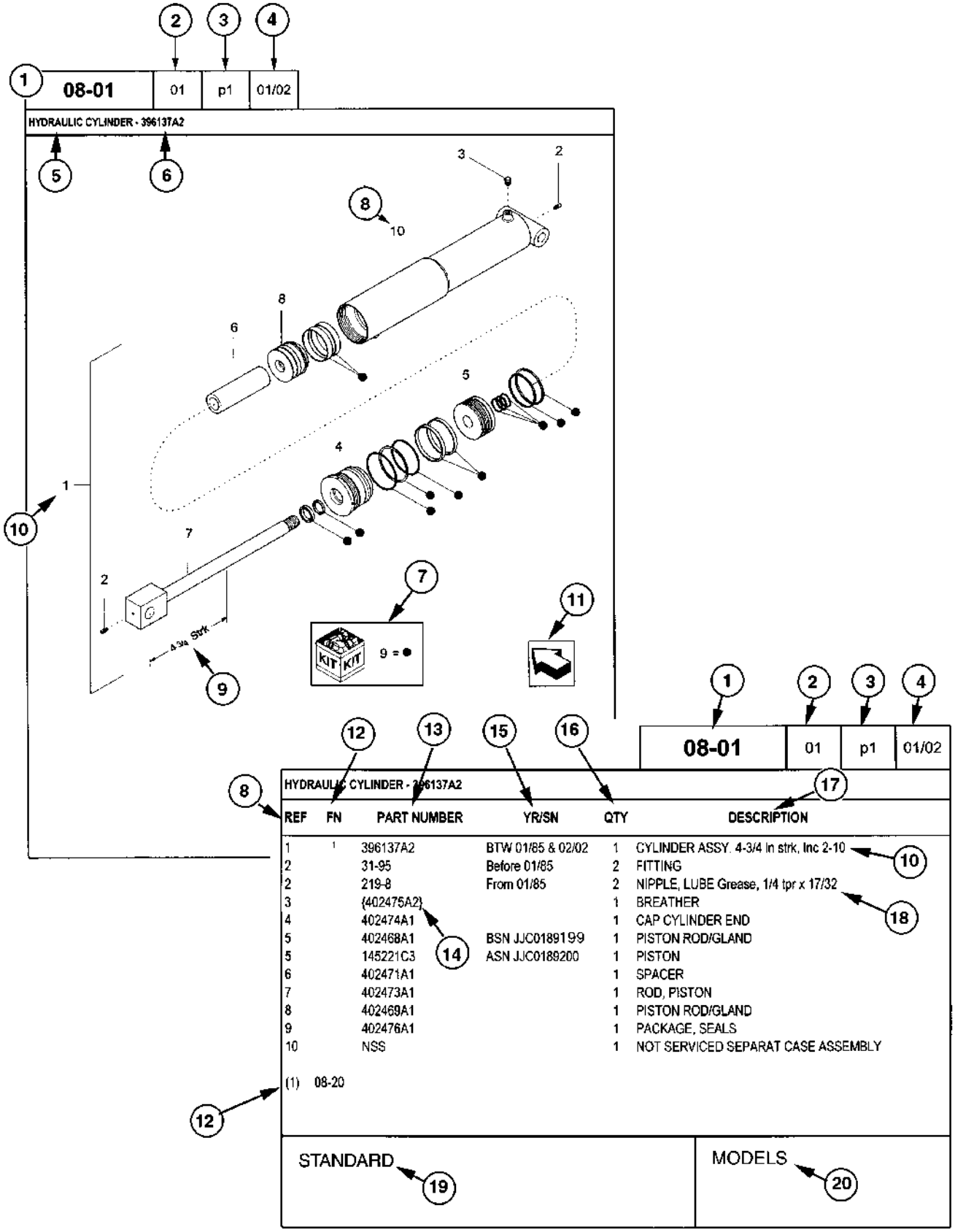

How to Use Your Parts Catalog

1. Figure Number
2. Sequence code within the Figure Number
3. Page number within the Sequence Code
4. Date of Printing (month / year)
5. Figure Description
6. General information regarding the figure
7. Parts supplied in repair kits per symbol reference
8. Figure call-out of the part number (REF)
9. Technical Specifications relating to the part indicated
10. Figure call-out includes bracketed items, the included items may also be listed in the additional description area
11. Orientation - Arrow indicates front of the machine
12. Footnote - Additional information relating to the part number. In this example, 08-20 equals another figure that this part is shown on.
13. Part Number
    NSS = Non-serviced parts
    Bracketed numbers = not available as service parts in this market
14. Not Available as service part in this market
15. YR/SN
    Year
    Before 01/85 = Part valid for production January 1985 and before
    From 01/85 = Part valid for production from January 1985 and after
    BTW 01/85 & 02/02 = Part valid for machines produced between January 1985 and February 2002.

    Serial Number (P.I.N.)
    BSN JJC0268800 = Part valid for serial number JJC0268800 and below
    ASN JJC0268800 = Part valid for serial number JJC0268800 and above
    BTW JJC0178000 & JJC0179000 = Part valid for serial numbers between JJC0178000 & JJC0179000
16. Total Quantity of the Part referred to in the page. The quantity can be replaced by the following indications:
    AR = quantity as required
    X = as required
17. Part Description
18. Additional description of the part to help confirm identification
19. Figure Notes
20. Model Number(s)

Explanation of Abbreviations

Abbreviation	Meaning
adj	adjustable
amp	ampere
AR	As required
ASN	Serial number and after / P.I.N. and after
barb	barb
blkhd	bulkhead
boss	boss
BSN	before serial number / before P.I.N
BTW	between
cc	cubic centimetre
chain	chain
cl	class
cp pt	cup point
CRS	Chrome Alloy Steel
CST	Carbon Steel
cu yd	cubic yard
deg	degree
dia	diameter
dr type	drive type
dry	dry
fc	face
fc sl	face seal
fem	female
fem PT	female pipe thread
fl	flare
ft	feet (or foot)
gal	gallon(s)
gr	grade
hd	head
hp	horsepower
ID	inside diameter

Abbreviation	Meaning
in	inch(es)
Inc.	includes
inv fl	inverted flare
K	kilo
kg	kilogram
L	litre
lb	pound(s)
lg	long
LH	left hand
LH thd	left hand thread
links	links
M	(prefix) metric thread size
m	metre
male	male
mm	millimetre
NF	National Fine
No.	number
NS	National Super Fine
OD	outside diameter
ohm	electrical unit of resis-tance
Or	O-ring
orifice	orifice
P	pitch
piece	piece
psi	pounds per square inch
PT	pipe thread
rd	round
rd holes	round holes
RH	right hand
RH thd	right hand thread
rpm	revolutions per minute

Explanation of Abbreviations

Abbreviation	Meaning
sl	self locking
slat	slat
spool	spool
sq	square
SST	Stainless Steel
st	self tapping
stem	stem
strk	stroke
sw	swivel
T	teeth
Teflon	Teflon
thin	thin
thk	thick
tpr	taper

Abbreviation	Meaning
tube	tube
type	type
V	volt(s)
W	watt(s)
way	way
wide	wide
X	as required
yd	yard

Dimensions

Metric and U.S. hardware dimensions do not show the numeric designations of standard coarse threads. A number following a semi colon (;) is the class or grade of hardware. A comma (,) represents the decimal point (.) used in U.S. dimensions.

Sezioni

Informazioni generali - - - - - - - - - - 1

Motore - - - - - - - - - - 2

Impianto di alimentazione del combustibile - - - - - - - - - - 3

Impianto elettrico - - - - - - - - - - 4

Sterzo - - - - - - - - - - 5

Trasmissione - - - - - - - - - - 6

Freni - - - - - - - - - - 7

Impianto idraulico - - - - - - - - - - 8

Telaio/Accessori - - - - - - - - - - 9

Indice numerico - - - - - - - - - - 10

Come utilizzare il catalogo ricambi

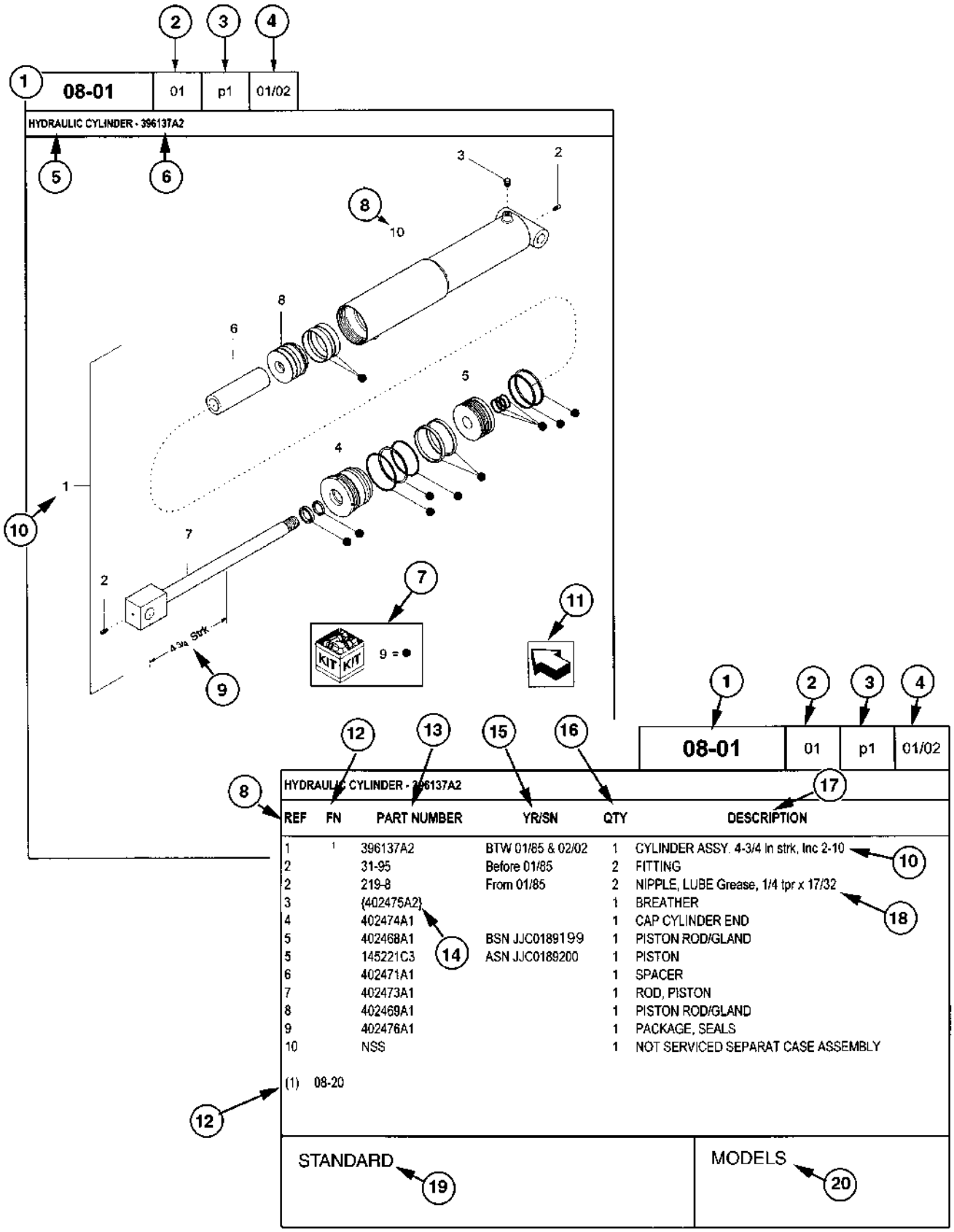

Come utilizzare il catalogo ricambi

1. Numero della figura.
2. Codice dei sequenza all'interno del numero della figura.
3. Numero di pagina all'interno del codice di sequenza.
4. Data di stampa (mese/anno).
5. Descrizione figura.
6. Informazioni generali relative alla figura.
7. Pezzi in dotazione con i kit per simbolo di riferimento.
8. Rimando a didascalia del numero pezzo (RIF).
9. Specifiche tecniche relative al pezzo indicato.
10. Il rimando a didascalia include elementi in parentesi. Gli elementi inclusi possono anche essere elencati nell'area di descrizione supplementare.
11. Orientamento – Le frecce indicano la parte anteriore della macchina.
12. Nota in calce – Ulteriori informazioni relative al numero pezzo. Nel presente esempio, 08-20 equivale ad un'altra figura che rappresenta lo stesso pezzo.
13. Numero pezzo
    NSS = Pezzi che non richiedono manutenzione.
    Numeri in parentesi = Non disponibili come pezzi di ricambio sul mercato.
14. Non disponibili come pezzi di ricambio sul mercato.
15. Anno/Numero di serie
    Anno
    Precedenti a 01/85 = Pezzi validi per produzione fino a gennaio 1985.
    Successivi a 01/85 = Pezzi validi per produzione da gennaio 1985 in avanti.
    BTW 01/85 e 02/02 = Pezzi validi per macchine la cui produzione è compresa tra il gennaio 1985 ed il febbraio 2002.

    Numero di serie (P.I.N.)
    BSN JJC0268800 = Pezzi validi per numero di serie JJC0268800 e precedenti.
    ASN JJC0268800 = Pezzi validi per numero di serie JJC0268800 e successivi.
    BTW JJC0178000 e JJC0179000 = Pezzi validi per numeri di serie compresi tra JJC0178000 e JJC0179000.
16. Quantità totale dei pezzi descritti nella pagina. La quantità può essere sostituita dalle seguenti indicazioni:
    AR = quantità secondo necessità.
    X = secondo necessità.
17. Descrizione dei pezzi.
18. Ulteriori descrizioni del pezzo per confermarne l'identificazione.
19. Note.
20. Numero/i di modello.

Significato delle abbreviazioni

Abbreviazione	Significato
adj	regolabile
amp	ampere
AR	secondo necessità
ASN	numero di serie e successivi / P.I.N. e successivi
barb	dentato
blkhd	paratia
boss	risalto
BSN	precedenti al numero di serie / precedenti al P.I.N
BTW	compreso tra
cc	centimetro cubo
chain	catena
cl	classe
cp pt	estremità a corona tagliente
CRS	acciaio al cromo
CST	acciaio al carbonio
cu yd	iarda cubica
deg	grado
dia	diametro
dr type	tipo di trasmissione
dry	a secco
fc	superficie
fc sl	guarnizione a tenuta frontale
fem	femmina
fem PT	filettatura passo gas femmina
fl	svasatura
ft	piede (o piedi)
gal	galloni
gr	grado
hd	testa
hp	potenza
ID	diametro interno

Abbreviazione	Significato
in	pollice (pollici)
Inc.	comprende
inv fl	svasatura inversa
K	kilo
kg	chilogrammo
L	litro
lb	libbra (libbre)
lg	lungo
LH	sinistra
LH thd	filettatura sinistrorsa
links	connessioni
M	(prefisso) filettatura metrica
m	metro
male	maschio
mm	millimetro
NF	filettatura fine American Standard
No.	numero
NS	filettatura super fine American Standard
OD	diametro esterno
ohm	unità di misura elettrica della resistenza
Or	o-ring
orifice	orifizio
P	passo
piece	pezzo
psi	libbre per pollice quadrato
PT	filettatura a passo gas
rd	rotondo
rd holes	fori rotondi
RH	destra
RH thd	filettatura destrorsa
rpm	giri/min.

Significato delle abbreviazioni

Abbreviazione	Significato
sl	autobloccante
slat	spranga
spool	bobina
sq	quadrato
SST	acciaio inossidabile
st	autofilettante
stem	stelo
strk	corsa
sw	pezzo girevole
T	dentatura
Teflon	Teflon
thin	sottile
thk	spesso
tpr	conicità

Abbreviazione	Significato
tube	tubo
type	tipo
V	volt
W	watt
way	via
wide	largo
X	secondo necessità
yd	iarda

Dimensioni

Le dimensioni della bulloneria espresse nei sistemi metrico e americano non indicano le designazioni numeriche delle filettature grosse standard. Un numero seguito da un punto e virgola (;) rappresenta la classe o il grado della bulloneria. Una virgola (,) rappresenta il punto decimale (.) utilizzato nelle unità di misura americane.

Configuration des sections

Généralités - 1

Moteur - 2

Circuit de carburant - 3

Circuit électrique - 4

Direction - 5

Groupe motopropulseur - 6

Freins - 7

Installation hydraulique - 8

Châssis/Accessoires - 9

Index numérique - 10

Utilisation du catalogue de pièces

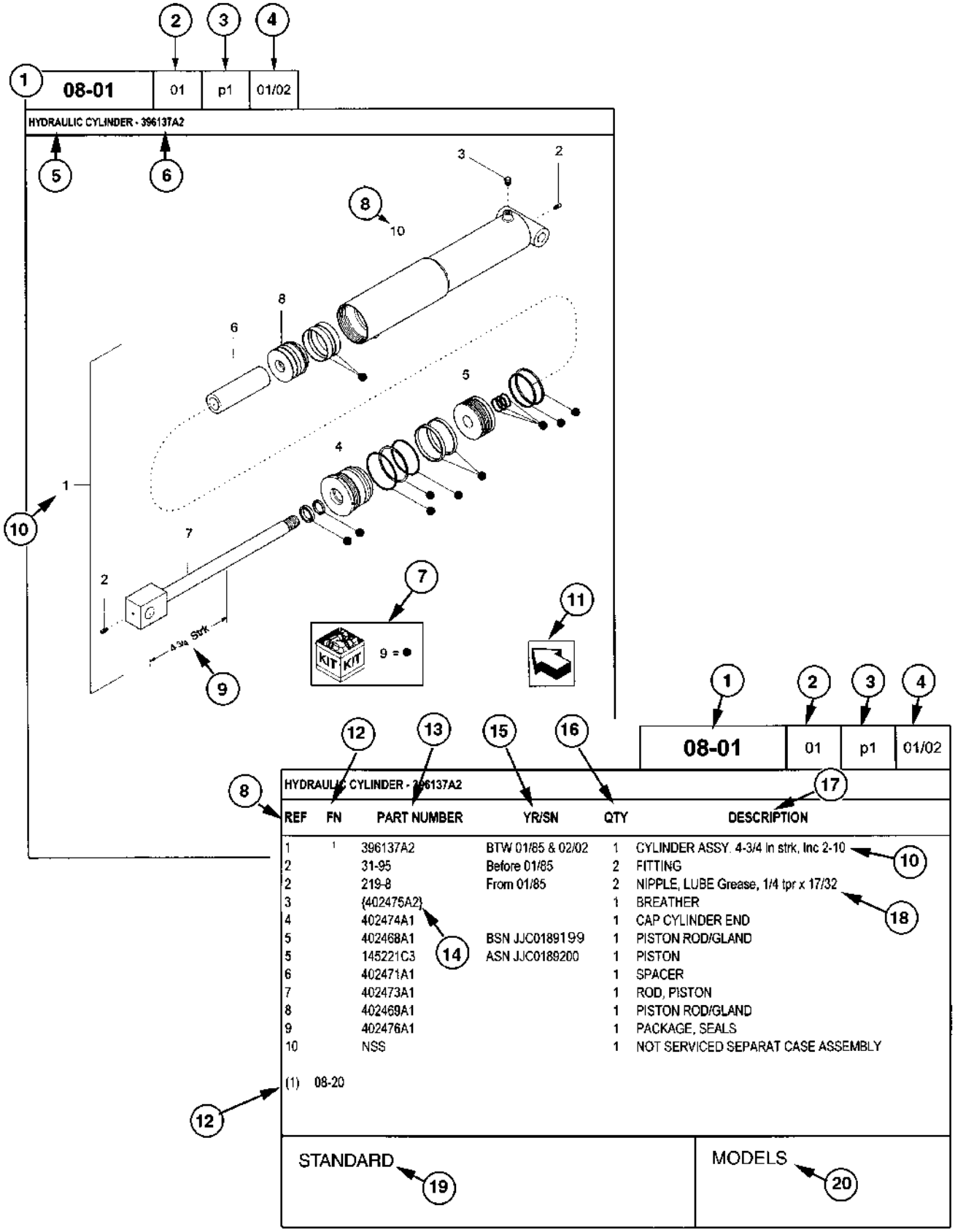

Utilisation du catalogue de pièces

1. Numéro de la figure
2. Code de séquence dans le numéro de la figure
3. Numéro de la page dans le code de séquence
4. Date d'impression (mois/année)
5. Description de la figure
6. Informations générales relatives à la figure
7. Pièces fournies dans les kits de réparation selon référence de symbole
8. Chiffre-référence de la référence
9. Caractéristiques techniques relatives à la pièce indiquée
10. Le chiffre-référence de la figure inclut des articles entre crochets, les articles inclus peuvent aussi être énumérés dans la zone de description additionnelle
11. Orientation - La flèche indique l'avant de la machine
12. Note de pied de page – Informations supplémentaires relatives à la référence. Dans cet exemple, 08-20 correspond à une autre figure où cette pièce est illustrée
13. Référence
    NSS = pièces sans entretien
    Numéros entre parenthèses = localement non disponibles comme pièces détachées
14. Localement non disponible comme pièce détachée
15. Année/N° de série
    Année
    Avant 01/85 = pièce valable pour la production de janvier 1985 et antérieure
    À partir de 01/85 = pièce valable pour la production de janvier 1985 et postérieure
    Entre 01/85 et 02/02 = pièce valable pour les machines produites entre janvier 1985 et février 2002

    Numéro de série (P.I.N.)
    BSN JJC0268800 = pièce valable pour les numéros de série JJC0268800 et inférieurs
    ASN JJC0268800 = pièce valable pour les numéros de série JJC0268800 et supérieurs
    Entre JJC0178000 et JJC0179000 = pièce valable pour les numéros de série compris entre JJC0178000 et JJC0179000
16. La quantité totale de pièces auxquelles il est fait référence dans cette page. La quantité peut être remplacée par les indications suivantes :
    AR = quantité selon le besoin
    X = selon le besoin
17. Description
18. Description complémentaire de la pièce pour faciliter la confirmation de l'identification
19. Notes de la figure
20. Numéro(s) de modèle

Explication des abréviations

Abréviation	Signification
adj	réglable
amp	ampère
AR	selon le besoin
ASN	numéro de série et supérieur/ P.I.N. et supérieur
barb	à cannelure
blkhd	cloison
boss	bossage
BSN	avant le numéro de série / avant le P.I.N.
BTW	entre
cc	centimètre cube
chain	chaîne
cl	classe
cp pt	bout cuvette
CRS	acier en alliage de chrome
CST	acier au carbone
cu yd	yard cube
deg	degré
dia	diamètre
dr type	type d'entraînement
dry	sec
fc	face
fc sl	joint à face
fem	femelle
fem PT	filetage de tube femelle
fl	évasement
ft	pied(s)
gal	gallon(s)
gr	grade
hd	tête
hp	chevaux
ID	diamètre intérieur

Abréviation	Signification
in	pouce(s)
Inc.	comprend
inv fl	évasement inversé
K	kilo
kg	kilogramme
L	litre
lb	livre(s)
lg	long
LH	côté gauche
LH thd	filetage à gauche
links	tringles
M	(préfixe) taille métrique du filetage
m	mètre
male	mâle
mm	millimètre
NF	National Fine
No.	n°
NS	National Super Fine
OD	diamètre externe
ohm	ohm
Or	joint torique
orifice	orifice
P	pas
piece	pièce
psi	livres par pouce carré
PT	filetage de tuyau
rd	rond
rd holes	trous ronds
RH	droit
RH thd	filetage à droite
rpm	tr/mn
sl	autobloquant

Explication des abréviations

Abréviation	Signification
slat	latte
spool	tiroir
sq	carré
SST	acier inoxydable
st	à auto-taraudage
stem	tige
strk	course
sw	pivot
T	dent
Teflon	Teflon
thin	mince
thk	épais
tpr	conique

Abréviation	Signification
tube	tube
type	type
V	volt(s)
W	watt(s)
way	voie
wide	large
X	selon le besoin
yd	yard

Dimensions

Les dimensions impériales et métriques ne montrent pas les désignations numériques du filetage standard. Un chiffre suivant un point virgule (;) est la classe ou le grade de la visserie. Une virgule (,) représente le point séparateur décimal (.) du système impérial.

Abschnittsstrukturierung

Allgemeines - 1

Motor - 2

Kraftstoffanlage - 3

Elektrische Anlage - 4

Lenkung - 5

Kraftübertragung - 6

Bremsen - 7

Hydraulische Anlage - 8

Fahrgesell/Zubehör - 9

Nummerischer Index - 10

Verwendung Ihres Teilekatalogs

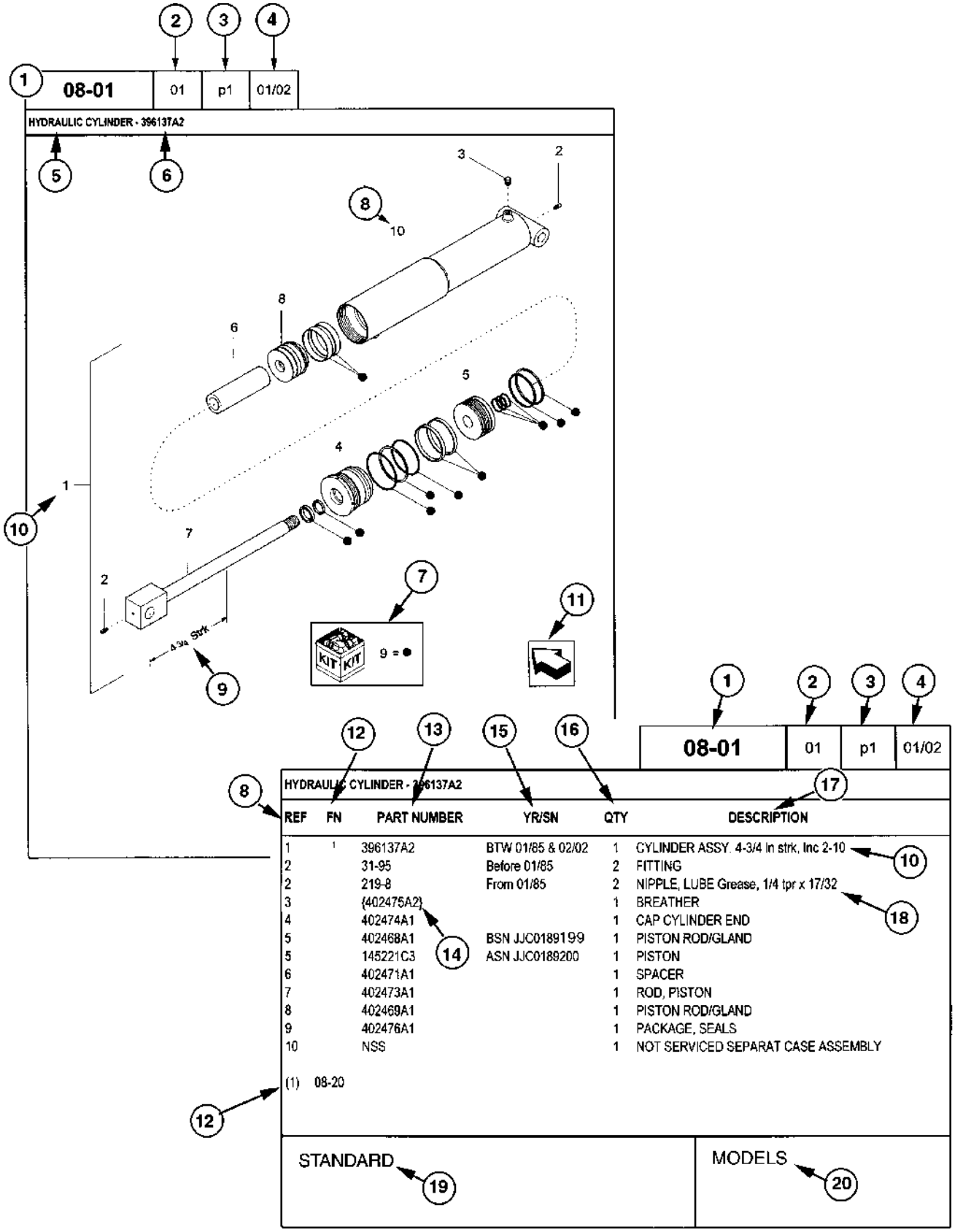

Verwendung Ihres Teilekatalogs

1. Abbildungsnummer
2. Sequenzcode in der Abbildungsnummer
3. Seitennummer im Sequenzcode
4. Druckdatum (Monat / Jahr)
5. Abbildungsbeschreibung
6. Allgemeine Informationen zur Abbildung
7. In den Reparaturkits mitgelieferte Teile gem. Symbolreferenz
8. Abbildungs-Bildunterschrift der Teilnummer (REF)
9. Technische Spezifikationen des angezeigten Teils
10. Abbildungs-Bildunterschrift enthält Artikel in Klammern. Diese eingeschlossenen Teile werden u. U. auch im zusätzlichen Beschreibungsfeld aufgeführt
11. Ausrichtung – Pfeil zeigt zum Vorderteil der Maschine
12. Fußnote – Zusätzliche Informationen zur Teilnummer. In diesem Beispiel steht 08-20 für eine andere Abbildung, in der dieses Teil gezeigt ist
13. Teilnummer
    NSS = nicht wartungsfähige Teile
    Zahlen in Klammern = nicht als Wartungsteile auf diesem Markt erhältlich
14. Nicht als Wartungsteil auf diesem Markt erhältlich
15. YR/SN
    Jahr
    Bis 01/85 = Teil gültig für Herstellung bis Januar 1985
    Ab 01/85 = Teil gültig für Herstellung ab Januar 1985
    BTW 01/85 und 02/02 = Teil gültig für Maschinen, die zwischen Januar 1985 und Februar 2002 hergestellt wurden.

    Seriennummer (P.I.N.)
    BSN JJC0268800 = Teil gültig bis Seriennummer JJC0268800
    ASN JJC0268800 = Teil gültig ab Seriennummer JJC0268800
    BTW JJC0178000 & JJC0179000 = Teil gültig für Seriennummern zwischen JJC0178000 und JJC0179000
16. Gesamtmenge der Teile, auf die auf dieser Seite Bezug genommen wird. Die Menge kann durch folgende Angaben ersetzt werden:
    AR = Menge nach Bedarf
    X = nach Bedarf
17. Beschreibung
18. Zusätzliche Beschreibung des Teils, um die Identifizierung zu bestätigen
19. Abbildungsbemerkungen
20. Modellnummer(n)

Erklärung der Abkürzungen

Abkürzung	Bedeutung
adj	einstellbar
amp	Ampere
AR	nach Bedarf
ASN	Ab Seriennummer / ab Fahrgestellnummer (P.I.N.)
barb	Widerhaken
blkhd	Motor
boss	Vorsprung
BSN	Bis Seriennummer / bis Fahrgestellnummer (P.I.N.)
BTW	zwischen
cc	Kubikzentimeter
chain	Kette
cl	Klasse
cp pt	Ringschneide
CRS	Legierter Chromstahl
CST	Kohlenstoffstahl
cu yd	Cubic yd
deg	Grad
dia	Durchmesser
dr type	Antriebstyp
dry	trocken
fc	Front
fc sl	Frontdichtung
fem	Buchse
fem PT	Buchsenrohrgewinde
fl	konisch
ft	Feet (oder Foot)
gal	Gallon(en)
gr	Güteklasse
hd	Kopf
hp	PS
ID	Innendurchmesser

Abkürzung	Bedeutung
in	inch(es)
Inc.	einschließlich
inv fl	invertiert konisch
K	Kilo
kg	Kilogramm
L	Liter
lb	pound(s)
lg	lang
LH	links
LH thd	Linksgewinde
links	Glieder
M	(Präfix) metrische Gewindegröße
m	Meter
male	Stecker
mm	Millimeter
NF	National Fine
No.	Nummer
NS	National Super Fine
OD	Außendurchmesser
ohm	elektrische Einheit des Widerstands
Or	O-Ring
orifice	Düse
P	Neigung
piece	Stück
psi	Pound pro Quadratzoll
PT	Rohrgewinde
rd	rund
rd holes	runde Bohrungen
RH	rechts
RH thd	Rechtsgewinde
rpm	Umdrehungen pro Minute

Erklärung der Abkürzungen

Abkürzung	Bedeutung
sl	selbstverriegelnd
slat	Leiste
spool	Schieber
sq	quadratisch
SST	Edelstahl
st	selbstschneidend
stem	Stamm
strk	Hub
sw	Drehgelenk
T	Zähne
Teflon	Teflon
thin	dünn
thk	dick
tpr	Verjüngung

Abkürzung	Bedeutung
tube	Rohr
type	Typ
V	Volt
W	Watt
way	Wege
wide	breit
X	nach Bedarf
yd	yard

Abmessungen

Metrische und US-Befestigungselementegrößen zeigen nicht die nummerischen Zuordnungen von Standardgrobgewinden an. Eine dem Semikolon (;) folgende Zahl ist die Klasse oder Güteklasse der Befestigungselemente. Ein Komma (,) steht für die Dezimalstelle (.) in US-Abmessungen.

Índice por secciones

General - 1

Motor - 2

Sistema de combustible - 3

Sistema eléctrico - 4

Dirección - 5

Tren de fuerza - 6

Frenos - 7

Sistema hidráulico - 8

Bastidor/Accesorios - 9

Índice numérico - 10

Cómo usar el catálogo de piezas

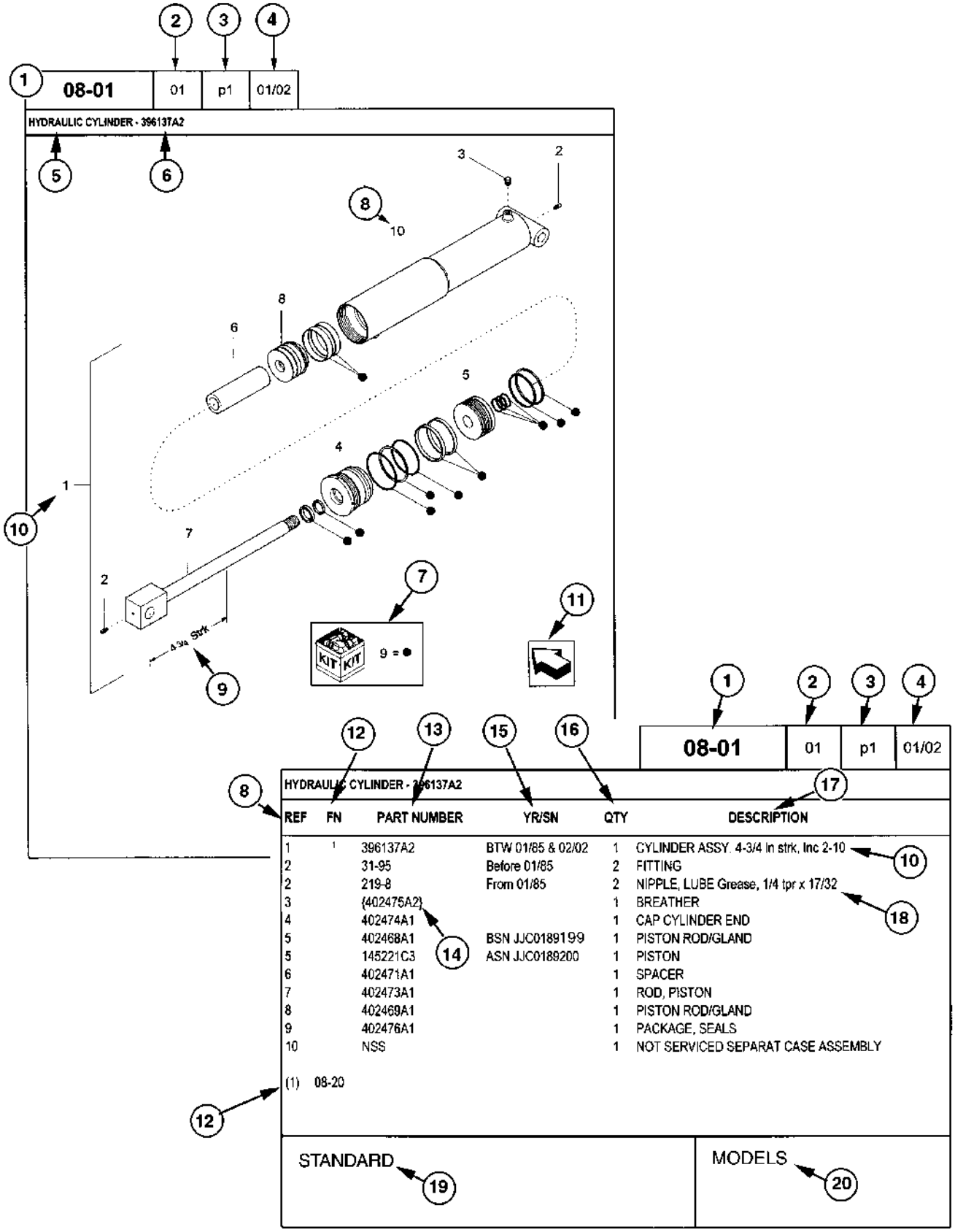

Cómo usar el catálogo de piezas

1. Número de figura
2. Código de secuencia con número de figura
3. Número de página en el código de secuencia
4. Fecha de impresión (mes/año)
5. Descripción de la figura
6. Información general sobre la figura
7. Piezas suministradas en los juegos de reparación según la referencia del símbolo
8. Leyenda de referencia del número de pieza (REF)
9. Especificaciones técnicas referentes a la pieza indicada
10. Leyenda de figura que incluye artículos en paréntesis, los artículos incluidos pueden encontrarse también en el área de descripción adicional.
11. Orientación – La flecha muestra la parte delantera de la máquina.
12. Pie de página – Información adicional referente al número de pieza. En este ejemplo, 08-20 equivale a otra figura en la que se muestra esta pieza.
13. Número de pieza
    NSS = Piezas a las que no se les realiza mantenimiento
    Números en paréntesis = no disponibles como piezas de mantenimiento en este mercado
14. No disponibles como piezas de mantenimiento en este mercado
15. YR/SN
    Año
    Antes de 01/85 = Pieza en fabricación en enero de 1985 y anteriormente.
    Desde 01/85 = Pieza en fabricación desde enero de 1985 y posteriormente.
    BTW 01/85 & 02/02 = Pieza válida para máquinas fabricadas entre enero de 1985 y febrero de 2002.

    Número de serie (N.I.P.)
    BSN JJC0268800 = Pieza válida para el número de serie JJC0268800 y anteriores
    ASN JJC0268800 = Pieza válida para el número de serie JJC0268800 y posteriores
    BTW JJC0178000 & JJC0179000 = Pieza válida para los números de serie entre JJC0178000 y JJC0179000
16. Cantidad total de piezas referidas en la página. La cantidad puede reemplazarse por las siguientes instrucciones:
    AR = Cantidad según se requiera
    X = Según se requiera
17. Descripción de la pieza
18. Información adicional sobre la pieza para ayudar a confirmar la identificación
19. Notas de figura
20. Número(s) de modelo

Explicación de abreviaturas

Abreviaturas	Significado
adj	ajustable
amp	amperios
AR	según sea necesario
ASN	número de serie y posterior/N.I.P. y posterior
barb	barb
blkhd	mamparo
boss	boss
BSN	anterior al número de serie / anterior al N.I.P.
BTW	entre
cc	centímetros cúbicos
chain	cadena
cl	clase
cp pt	punto de copa
CRS	Acero de aleación de cromo
CST	Acero al carbono
cu yd	yarda cúbica
deg	grados
dia	diámetro
dr type	tipo de transmisión
dry	seco
fc	superficie
fc sl	superficie de sellado
fem	hembra
fem PT	rosca hembra de tubería
fl	ensanche
ft	pies (o pie)
gal	galón(es)
gr	grado
hd	cabeza
hp	potencia en C.V.
ID	diámetro interior

Abreviaturas	Significado
in	pulgada(s)
Inc.	incluye
inv fl	ensanche invertido
K	kilo
kg	kilogramo
L	litro
lb	libra(s)
lg	largo
LH	lado izquierdo
LH thd	rosca izquierda
links	enganches
M	(prefijo) tamaño de rosca en métrico
m	metro
male	macho
mm	milímetros
NF	National Fine
No.	número
NS	National Super Fine
OD	diámetro exterior
ohm	unidad eléctrica de resistencia
Or	junta tórica
orifice	diafragma
P	pitch
piece	pieza
psi	libras por pulgada cuadrada
PT	rosca de la tubería
rd	redondo/a
rd holes	agujeros redondos
RH	lado derecho
RH thd	rosca derecha
rpm	revoluciones por minuto

Explicación de abreviaturas

Abreviaturas	Significado
sl	autobloqueante
slat	slat
spool	bobina
sq	cuadrado/a
SST	Acero inoxidable
st	autorroscante
stem	vástago
strk	carrera
sw	balancín
T	dientes
Teflon	Teflon
thin	fino/a
thk	grueso/a

Abreviaturas	Significado
tpr	ahusado/a
tube	tubo
type	tipo
V	voltio(s)
W	vatio(s)
way	vía
wide	ancho/a
X	según sea necesario
yd	yardas

Dimensiones

Las dimensiones métricas e imperiales de la tornillería no muestran el número de medida de roscas anchas estándares. El número después de un punto y coma (;) es la clase o el grado de la tornillería. Una coma (,) representa el punto decimal (.) usando en dimensiones imperiales (EE.UU.)

Sumário

Geral - 1

Motor - 2

Sistema de Combustível - 3

Sistema Eléctrico - 4

Direcção - 5

Corrente Cinemática - 6

Travões - 7

Instalação Hidráulico - 8

Chassis/Acessórios - 9

Índice Numérico - 10

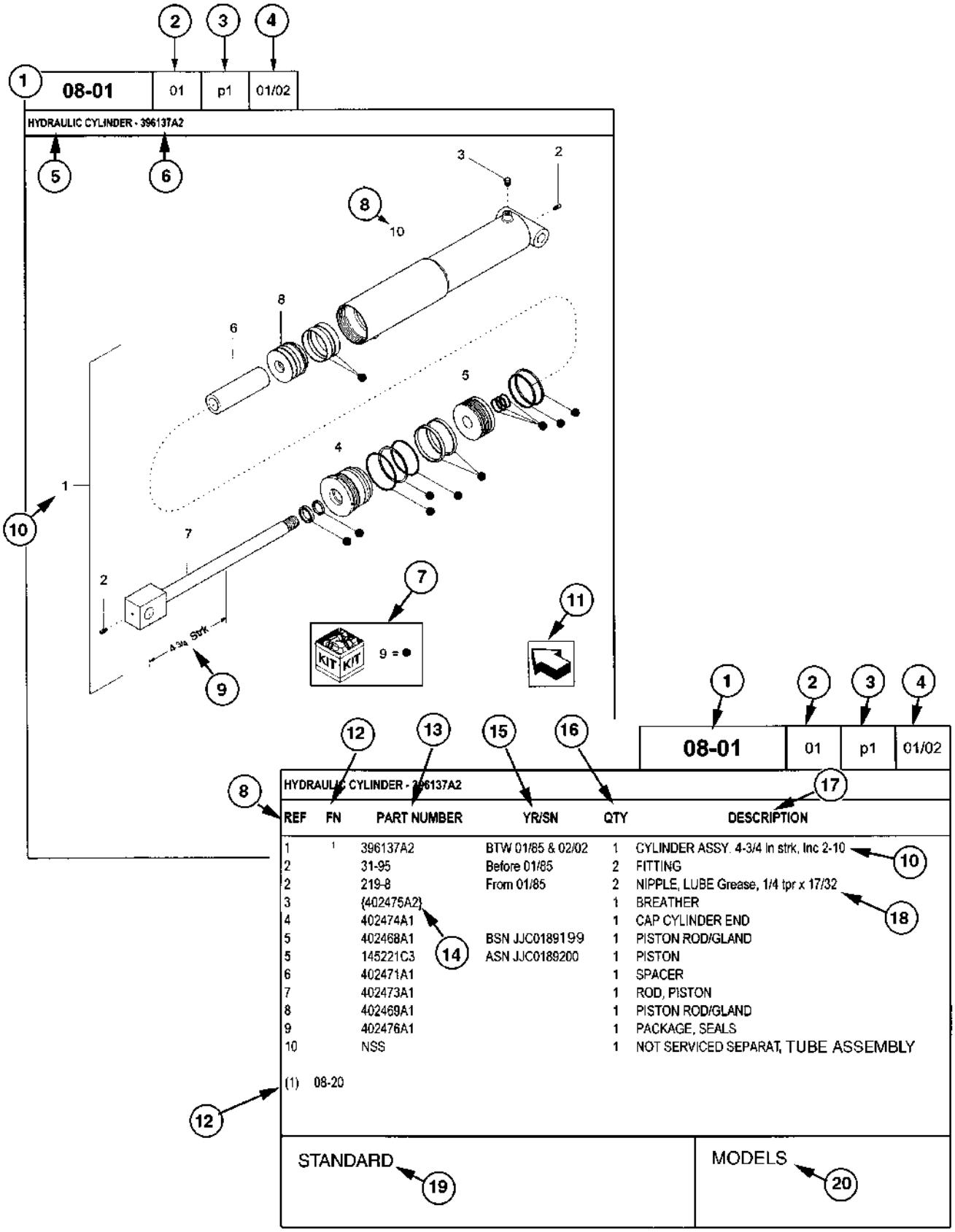
08-01
01
p1
01/02
HYDRAULIC CYLINDER - 396137A2
4 3/4 Strk
KIT
9 = ●
08-01
01
p1
01/02
HYDRAULIC CYLINDER - 396137A2
REF FN PART NUMBER YR/SN QTY DESCRIPTION
1 1 396137A2 BTW 01/85 & 02/02 1 CYLINDER ASSY. 4-3/4 in strk, Inc 2-10
2 31-95 Before 01/85 2 FITTING
2 219-8 From 01/85 2 NIPPLE, LUBE Grease, 1/4 tpr x 17/32
3 (402475A2) 1 BREATHER
4 402474A1 1 CAP CYLINDER END
5 402468A1 BSN JJC0189199 1 PISTON ROD/GLAND
5 145221C3 ASN JJC0189200 1 PISTON
6 402471A1 1 SPACER
7 402473A1 1 ROD, PISTON
8 402469A1 1 PISTON ROD/GLAND
9 402476A1 1 PACKAGE, SEALS
10 NSS 1 NOT SERVICED SEPARAT, TUBE ASSEMBLY
(1) 08-20
STANDARD
MODELS

Como Utilizar o Seu Catálogo de Peças

1. Número da Figura
2. Código de sequência dentro do Número da Figura
3. Número de Página dentro do Código de Sequência
4. Data de Impressão (mês/ano)
5. Descrição da Figura
6. Informações gerais sobre a figura
7. Peças fornecidas em kits de reparação de acordo com a referência do símbolo
8. Número de referência à peça (REF)
9. Especificações Técnicas sobre a peça indicada
10. O número de referência à peça inclui itens entre parênteses; os itens incluídos também podem estar listados na área de descrições adicionais.
11. Orientação – A seta indica a dianteira da máquina.
12. Nota de rodapé – Informações adicionais relativas ao número de peça. Neste exemplo, 08-20 refere-se a outra figura onde esta peça é exibida.
13. Número de Peça
    NSS = Peças sem possibilidade de manutenção
    Números entre chavetas = não disponíveis como peças de manutenção neste mercado
14. Não disponíveis como peças de manutenção neste mercado
15. YR/SN
    Ano
    Antes de 01/85 = Peça válida para produção até Janeiro de 1985
    A partir de 01/85 = Peça válida para produção a partir de Janeiro de 1985
    Entre 01/85 e 02/02 = Peça válida para máquinas produzidas entre Janeiro de 1985 e Fevereiro de 2002

    Número de Série (P.I.N.)
    BSN JJC0189199 = Peça válida para os números de série JJC0189199 e inferiores
    ASN JJC0189200 = Peça válida para os números de série JJC0189200 e superiores
    Entre JJC0178000 e JJC0179000 = Peça válida para os números de série entre JJC0178000 e JJC0179000
16. Quantidade Total da Peça referida na página. A quantidade pode ser substituída pelas seguintes indicações:
    AR = quantidade, conforme requerido
    X = conforme requerido
17. Descrição da Peça
18. Descrição adicional da peça para ajudar a confirmar a identificação
19. Notas sobre a Figura
20. Número(s) de Modelo(s)

Explicação de Abreviaturas

Abreviatura	Significado
adj	ajustável
amp	ampere
AR	Conforme requerido
ASN	número de série e posteriores / P.I.N. e posteriores
barb	rebarba
blkhd	antepara
boss	ressalto
BSN	anterior ao número de série / anterior ao P.I.N.
BTW	entre
cc	centímetros cúbicos
chain	corrente
cl	classe
cp pt	ponto de copo
CRS	aço de liga de cromo
CST	aço de carbono
cu yd	jardas cúbicas
deg	grau
dia	diâmetro
dr type	tipo de tracção
dry	seco
fc	face
fc sl	vedação da face
fem	fêmea
fem PT	rosca do cano fêmea
fl	afunilado
ft	pés (ou pé)
gal	galão(ões)
gr	classificação
hd	cabeça
hp	cavalos-vapor
ID	diâmetro interno

Abreviatura	Significado
in	polegada(s)
Inc.	inclui
inv fl	afunilado invertido
K	quilo
kg	quilograma
L	litro
lb	libra(s)
lg	comprido
LH	lado esquerdo
LH thd	rosca esquerda
links	acopladores
M	(prefixo) tamanho métrico da rosca
m	metro
male	macho
mm	milímetro
NF	National Fine
No.	número
NS	National Super Fine
OD	diâmetro externo
ohm	unidade eléctrica de resistência
Or	anel em O
orifice	orifício
P	afastamento
piece	parte
psi	libras por polegadas ao quadrado
PT	rosca do cano
rd	redondo
rd holes	orifícios redondos
RH	lado direito
RH thd	rosca direita
rpm	rotações por minuto

Explicação de Abreviaturas

Abreviatura	Significado
sl	auto trancamento
slat	ardósia
spool	rolo
sq	quadrado
SST	aço inoxidável
st	auto-roscante
stem	haste
strk	curso
sw	articulação giratória
T	dentes
Teflon	Teflon
thin	fino
thk	espesso
tpr	cónico

Abreviatura	Significado
tube	tubo
type	tipo
V	volt(s)
W	watt(s)
way	entrada
wide	largo
X	conforme requerido
yd	jarda

Dimensões

As dimensões métricas e imperiais das peças não mostram as designações numéricas das roscas standard. Um número a seguir a um ponto e vírgula (;) é a classe ou classificação da peça. Uma vírgula (,) representa o ponto decimal (.) usado nas dimensões imperiais.

Indeling in hoofdstukken

Algemeen - - - - - 1

Motor - - - - - 2

Brandstofsysteem - - - - - 3

Elektrisch systeem - - - - - 4

Stuurinrichting - - - - - 5

Aandrijflijn - - - - - 6

Remsysteem - - - - - 7

Hydraulisch systeem - - - - - 8

Chassis/aanbouw - - - - - 9

Genummerde index - - - - - 10

Het gebruik van uw onderdelencatalogus

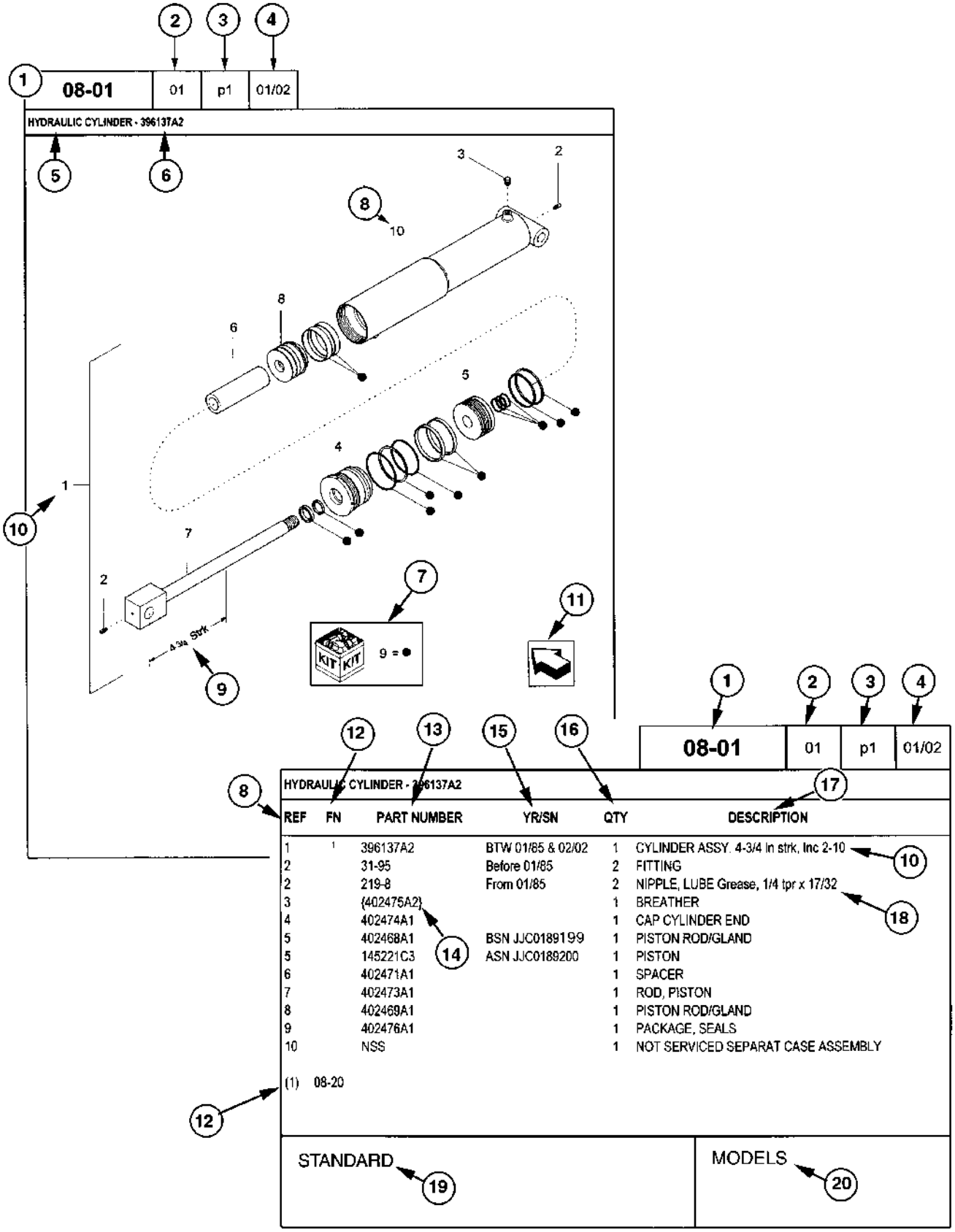

Het gebruik van uw onderdelencatalogus

1. Nummer afbeelding
2. Sequentiecode binnen het nummer van de afbeelding
3. Paginanummer binnen de sequentiecode
4. Datum druk (maand/jaar)
5. Beschrijving afbeelding
6. Algemene informatie met betrekking tot de afbeelding
7. Onderdelen geleverd in reparatiesets, per symboolreferentie
8. Afbeeldingsonderschrift van het onderdeelnummer (REF)
9. Technische specificaties met betrekking tot het aangeduide onderdeel
10. Het afbeeldingsonderschrift bevat voorwerpen tussen haakjes; de genoemde voorwerpen kunnen ook genoemd worden in de aanvullende omschrijvingen
11. Richting – De pijl geeft de voorkant van de machine aan
12. Voetnoot – Aanvullende informatie met betrekking tot het onderdeelnummer. In dit voorbeeld duidt 08-20 op een andere afbeelding waar dit onderdeel op voorkomt
13. Onderdeelnummer
    NSS = Onderdelen waaraan geen onderhoud wordt verricht
    Nummers tussen haakjes = niet in dit afzetgebied leverbaar als onderhoudsonderdelen
14. Niet leverbaar als onderhoudsonderdeel in dit afzetgebied
15. YR/SN
    Jaar
    Vóór 01/85 = Onderdeel geldig voor productie januari 1985 en eerder
    Vanaf 01/85 = Onderdeel geschikt voor productie januari 1985 en later
    BTW 01/85 en 02/02 = Onderdeel geschikt voor machines geproduceerd tussen januari 1985 en februari 2002.

    Serienummer (P.I.N.)
    BSN JJC0268800 = Onderdeel geschikt voor serienummer JJC0268800 en lager
    ASN JJC0268800 = Onderdeel geschikt voor serienummer JJC0268800 en hoger
    BTW JJC0178000 en JJC0179000 = Onderdeel geschikt voor serienummers tussen JJC0178000 en JJC0179000
16. Totaal aantal van het onderdeel waar op de pagina naar verwezen wordt. Het aantal kan worden vervangen door de volgende aanduidingen:
    AR = aantal zoals vereist
    X = naar vereist
17. Beschrijving onderdeel
18. Aanvullende beschrijving van het onderdeel om identificatie te bevestigen
19. Opmerkingen bij afbeelding
20. Modelnummer(s)

Verklaring van afkortingen

Afkorting	Betekenis
adj	verstelbaar
amp	ampère
AR	Naar vereist
ASN	Serienummer en later / P.I.N. en later
barb	haak
blkhd	scheidingswand
boss	bevestigingspunt
BSN	voor serienummer / voor P.I.N
BTW	tussen
cc	kubieke centimeter
chain	ketting
cl	klasse
cp pt	ronde punt
CRS	chroomstaallegering
CST	koolstofstaal
cu yd	kubieke yard
deg	graden
dia	diameter
dr type	type aandrijving
dry	droog
fc	loopvlak
fc sl	loopvlakafdichting
fem	vrouwelijk
fem PT	vrouwelijke pijpdraad
fl	tromp
ft	feet (of foot)
gal	gallon(s)
gr	graad
hd	head
pk	paardenkracht
ID	binnendiameter

Afkorting	Betekenis
in.	inch(es)
Inc.	inclusief
inv fl	omgekeerde tromp
K	kilo
kg	kilogram
L	liter
lb	pound(s)
lg	lang
LH	links
LH thd	linkse schroefdraad
links	links
M	(voorvoegsel) metrieke maat draad
m	meter
male	mannelijk
mm	millimeter
NF	National Fine
No.	nummer
NS	National Super Fine
OD	buitendiameter
ohm	eenheid elektrische weerstand
Or	O-ring
orifice	opening
P	spoed schroefdraad
piece	stuk
psi	pound per vierkante inch
PT	pijpdraad
rd	rond
rd holes	ronde gaten
RH	rechts
RH thd	rechtse schroefdraad
rpm	toeren per minuut

Verklaring van afkortingen

Afkorting	Betekenis
sl	zelfborgend
slat	lat
spool	spoel
sq	vierkant
SST	roestvrij staal
st	zelftappend
stem	steel
strk	slag (van zuiger)
sw	draaibaar
T	tanden
Teflon	Teflon
thin	dun
thk	dik
tpr	taps
tube	leiding

Afkorting	Betekenis
type	type
V	Volt
W	Watt
way	richting
wide	breed
X	naar vereist
yd	yard

Afmetingen

Metrieke en Amerikaanse maten van bevestigingsmaterialen geven niet de numerieke benamingen van de standaard typen schroefdraad weer. Een nummer volgend op een puntkomma (;) geeft de klasse of graad van het bevestigingsmateriaal weer. Een komma (,) vertegenwoordigt de decimale punt (.) in Amerikaanse maten.

Afsnitslayout

Generelt - 1

Motor - 2

Brændstofsystem - 3

Elektrisk system - 4

Styring - 5

Drivanordning- 6

Bremser - 7

Hydraulik - 8

Chassis/redskab- 9

Numerisk stikordsregister - 10

Sådan bruges reservedelskataloget

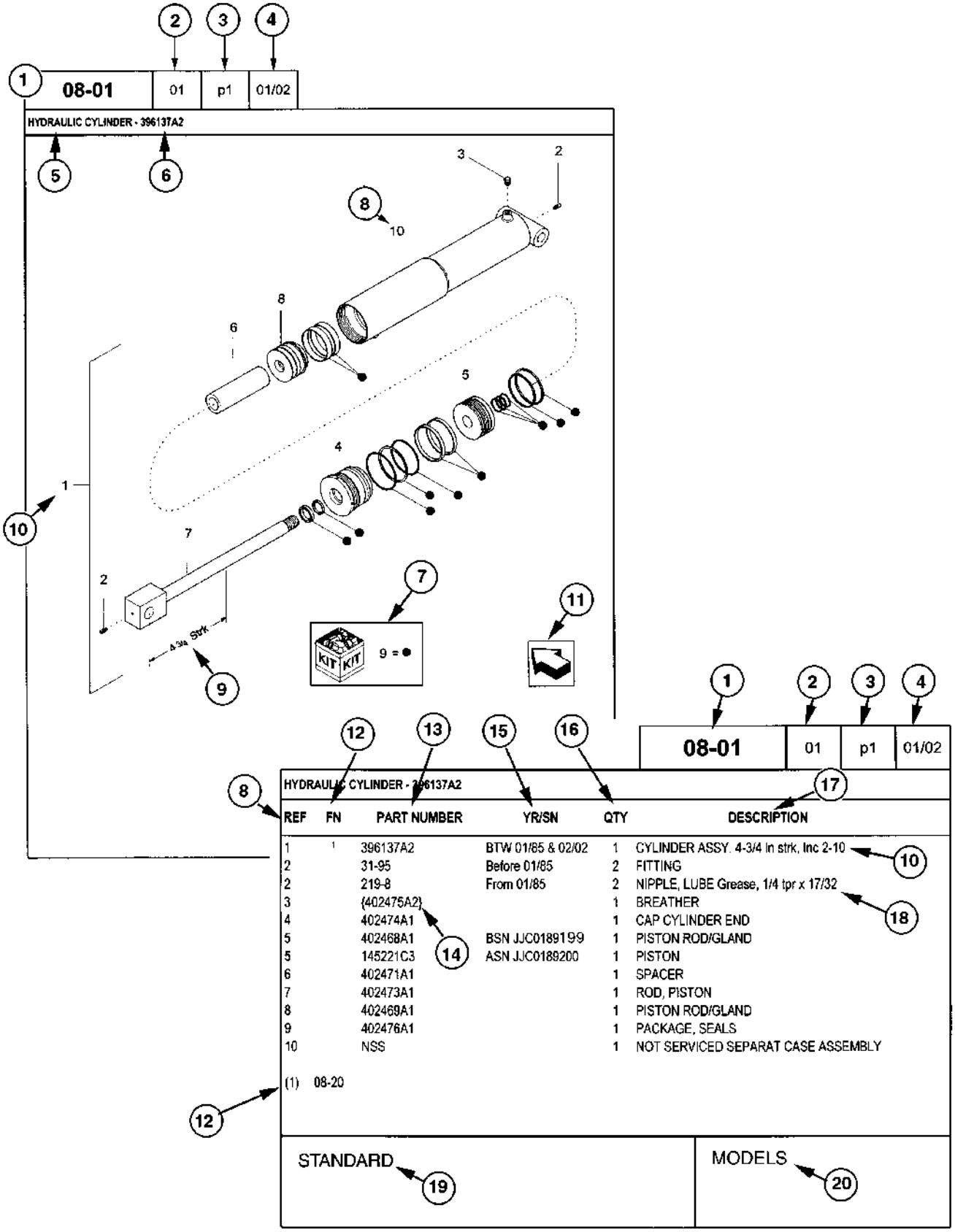

Sådan bruges reservedelskataloget

1. Figurnummer
2. Sekvenskode i figurnummeret
3. Sidenummer i sekvenskoden
4. Trykkedato (måned/år)
5. Figurbeskrivelse
6. Generelle oplysninger omkring figuren
7. Reservedele, der fulgte med reparationssæt, ifølge symbolhenvisninger
8. Henvisningsnummer for reservedelsnummeret (REF)
9. Tekniske specifikationer for den reservedel, der er indikeret
10. Nummerhenvisninger indbefatter genstande i parentes indbefattede genstande kan også stå i det ekstra beskrivelsesområde.
11. Orientering - Pil angiver maskinens forende
12. Fodnote - Yderligere oplysninger om reservedelsnummeret. I dette eksempel betyder 08-20 en anden figur, som denne reservedel er vist på
13. Reservedelsnummer
    NSS = Non-serviced parts (ikke-servicerede reservedele)
    Tal i parentes = fås ikke som servicedele på dette marked
14. Fås ikke som servicedele på dette marked
15. YR/SN
    År
    Inden 01/85 = Del gyldig for produktion januar 1985 og før
    Fra 01/85 = Del gyldig for produktion fra januar 1985 og efter
    BTW 01/85 og 02/02 = Del gyldig for maskiner, der er produceret mellem januar 1985 og februar 2002.

    Serienummer (P.I.N.)
    BSN JJC0268800 = Del gyldig for serienummer JJC0268800 og under
    ASN JJC0268800 = Del gyldig for serienummer JJC0268800 og over
    BTW JJC0178000 og JJC0179000 = Del gyldig for serienumre mellem JJC0178000 og JJC0179000
16. Samlet antal af den del, der henvises til på siden. Antallet kan være skiftet ud med følgende angivelser:
    AR = mængde efter behov
    X = efter behov
17. Beskrivelse
18. Yderligere beskrivelse af delen til at hjælpe med bekræftelse af identificering
19. Bemærkninger om figurer
20. Modelnummer/numre

Forklaring på forkortelser

Forkortelse	Betydning
adj	justerbar
amp	ampere
AR	Efter behov
ASN	Serienummer og opefter / P.I.N. og opefter
barb	modhage
blkhd	skot
boss	nav
BSN	før serienummer / før P.I.N.
BTW	mellem
cc	kubikcentimeter
chain	kæde
cl	klasse
cp pt	krater
CRS	Kromlegeringsstål
CST	Kulstofstål
cu yd	kubikyard
deg	grad
dia	diameter
dr type	drivtype
dry	tør
fc	flade
fc sl	fladesegl
fem	hun
fem PT	hunrørgevind
fl	tragt
ft	fod
gal	gallon
gr	kvalitetsgrad
hd	hoved
hp	hestekræfter
ID	indvendig diameter

Forkortelse	Betydning
in	In./tommer
Inc.	omfatter
inv fl	omvendt tragt
K	kilo
kg	kilogram
L	liter
lb	engelske pund
lg	lang
LH	venstre side
LH thd	venstre gevind
links	led
M	(præfiks) metrisk gevindstørrelse
m	meter
male	han
mm	millimeter
NF	National Fine
No.	nummer
NS	National Super Fine
OD	udvendig diameter
ohm	enhed for elektrisk modstand
Or	O-ring
orifice	åbning
P	hældning
piece	stykke
psi	pund pr. kvadrattomme
PT	rørgevind
rd	rund
rd holes	runde huller
RH	højre side
RH thd	højre gevind
rpm	omdrejninger i minuttet

Forklaring på forkortelser

Forkortelse	Betydning
sl	selvlåsende
slat	lamel
spool	spole
sq	kvadrat
SST	Rustfrit stål
st	galop
stem	spindel
strk	slag
sw	drejeled
T	tænder
Teflon	Teflon
thin	tynd
thk	tyk
tpr	konus

Forkortelse	Betydning
tube	rør
type	type
V	volt
W	watt
way	vej
wide	bred
X	efter behov
yd	yard

Mål

De metriske og amerikanske mål viser ikke de numeriske angivelser af standard grovgevind. Et nummer efter et semikolon (;) betegner klassen eller kvalitetsgraden af delen. Et komma (,) repræsenterer decimalpunktet. I amerikanske dimensioner anvendes et (.).

ALPHABETICAL INDEX

	FIGURE
AFTERCOOLER	02-06
AIR CONDITIONING - AIR FILTER	09-43
AIR CONDITIONING - CLIMATE CONTROL UNIT, WITH AUTO TEMP CONTROL	09-42
AIR CONDITIONING - CLIMATE CONTROL UNIT, WITHOUT AUTO TEMP CONTROL	09-41
AIR CONDITIONING - COMPRESSOR MOUNTING	09-38
AIR CONDITIONING - CONDENSER	09-39
AIR CONDITIONING - DUCTS	09-44
AIR INDUCTION SYSTEM - SEVERE DUTY	02-05
AIR INDUCTION SYSTEM - STANDARD DUTY	02-04
ALTERNATOR - MOUNTING	04-17
ALTERNATOR ASSEMBLY - 135 AMPERE	04-18
ANEROID AND WASTEGATE SYSTEM, MX210 AND MX230	03-03
A-POST COVER - INSTRUMENT CLUSTER	04-12
BATTERY, BATTERY BOX AND CABLES	04-22
BRAKES - CONTROL VALVE	07-05
BRAKES - DIFFERENTIAL	07-06
BRAKES - HYDRAULIC SYSTEM, WITH HYDRAULIC TRAILER BRAKES	07-03
BRAKES - HYDRAULIC SYSTEM, WITH PNEUMATIC TRAILER BRAKES	07-04
BRAKES - HYDRAULIC SYSTEM, WITHOUT TRAILER BRAKES	07-02
BRAKES - PEDAL BRAKE	07-01
BREATHER - TRANSMISSION	06-33
CAB - DOOR	09-19
CAB - EXTERIOR TRIM	09-16
CAB - FIXED GLASS	09-21
CAB - FLOOR MAT AND INSULATION	09-25
CAB - FRONT WINDOW STEP	09-18
CAB - HEADLINER, DELUXE AND LUXURY TRIM	09-24
CAB - HEADLINER, STANDARD TRIM	09-23
CAB - INSTRUMENT PANEL	09-28
CAB - INSULATION	09-45
CAB - MOUNTING AND FRAME, ASN AJB0355923	09-14
CAB - MOUNTING AND FRAME, BSN AJB0355923	09-13
CAB - REAR WINDOW	09-20
CAB - ROOF	09-15
CAB - STEPS	09-17
CAB - TRIM, CAB POSTS	09-27
CAB - TRIM, FENDERS	09-26
CAMSHAFT, MX210 AND MX230	02-34
CAMSHAFT, MX255 AND MX285	02-35
CARRIER AND DIFFERENTIAL - MFD, 10 BOLT HUB, WITH DIFFERENTIAL LOCK	05-19
CARRIER AND DIFFERENTIAL - MFD, 10 BOLT HUB, WITHOUT DIFFERENTIAL LOCK	05-18
CARRIER AND DIFFERENTIAL - MFD, 12 BOLT HUB, WITH DIFFERENTIAL LOCK	05-20
CONSOLE, RIGHT HAND, DELUXE AND LUXURY CAB	09-35
CONSOLE, RIGHT HAND, STANDARD CAB	09-34
CONTROLS - FRONT CONSOLE	04-13
CONTROLS - RIGHT FENDER CONSOLE, WITH ATC	04-16
CONTROLS - RIGHT FENDER CONSOLE, WITHOUT ATC	04-15
CONTROLS - RIGHT HAND CONSOLE	04-14
CRANKCASE, BREATHER, MX210 AND MX230, BSN JAZ132841	02-32
CRANKCASE, BREATHER, MX255 AND MX285	02-33
CRANKSHAFT	02-40
CUSHION ASSEMBLY - SEAT	09-30
CYLINDER ASSEMBLY - HITCH (278419A3)	08-26
CYLINDER ASSEMBLY - HITCH (305022A2)	08-24
CYLINDER ASSY - HITCH (278277A3)	08-25
CYLINDER BLOCK, MX210 AND MX230	02-36
CYLINDER BLOCK, MX255 AND MX285	02-37
CYLINDER HEAD - COVER, MX210 AND MX230, ASN JAZ132841	02-27
CYLINDER HEAD - COVER, MX210 AND MX230, BSN JAZ132841	02-26

ALPHABETICAL INDEX

	FIGURE
CYLINDER HEAD - COVER, MX255 AND MX285	02-28
CYLINDER HEAD - VALVE MECHANISM, MX210 AND MX230	02-29
CYLINDER HEAD - VALVE MECHANISM, MX255 AND MX285	02-30
DEAERATION SYSTEM	02-03
DECALS	09-62
DECALS	09-64
DECALS - STEYR	09-63
DRAWBAR AND HAMMERSTRAP	09-46
DRAWBAR AND HAMMERSTRAP - ITALY ONLY	09-47
ELECTRICAL COMPONENT MOUNTING	04-10
ELECTRICAL COMPONENT MOUNTING - FUSES	04-11
ENGINE MOUNTING	02-09
ETHER START SYSTEM	02-07
EXHAUST SYSTEM	02-08
FAN SHIELDS	09-11
FENDERS - FRONT, NARROW	09-06
FENDERS - FRONT, WIDE	09-07
FENDERS - REAR	09-08
FENDERS - REAR, EXTRA WIDE	09-09
FILTER AND COOLER - OIL, MX210 AND MX230	02-23
FILTER AND COOLER - OIL, MX255 AND MX285	02-24
FLYWHEEL	02-41
FLYWHEEL SHIELDS	02-10
FOOT THROTTLE, MX210 AND MX230	03-18
FOOT THROTTLE, MX255 AND MX285	03-19
FRONT AXLE - MOUNTING, MFD	05-08
FRONT AXLE - SUSPENSION, SUSPENDED MFD	05-09
FRONT AXLE DRIVE SHAFT - MFD, WITH DIFFERENTIAL LOCK	05-17
FRONT AXLE DRIVE SHAFT - MFD, WITHOUT DIFFERENTIAL LOCK	05-16
FRONT AXLE PLANETARIES AND HUB - MFD, 10 BOLT HUB	05-21
FRONT AXLE PLANETARIES AND HUB - MFD, 12 BOLT HUB	05-22
FRONT FRAME	09-01
FRONT GEAR COVER, MX210 AND MX230	02-13
FRONT GEAR COVER, MX255 AND MX285	02-14
FRONT HITCH	09-05
FRONT TOW CLEVIS	09-02
FRONT WEIGHTS	09-03
FRONT WEIGHTS	09-04
FRONT WHEELS - MFD, 10 BOLT HUB	05-25
FRONT WHEELS - MFD, 12 BOLT HUB	05-26
FUEL FILTER - PUMP, TRANSFER, MX210 AND MX230	03-04
FUEL FILTER AND CONNECTIONS, MX255 AND MX285	03-06
FUEL INJECTION - NOZZLE , MX255 AND MX285	03-15
FUEL INJECTION - NOZZLE, MX210 AND MX230	03-14
FUEL INJECTION - PUMP AND DRIVE, MX210 AND MX230	03-07
FUEL INJECTION PUMP - GEAR AND MOUNTING BRACKETS, MX255 AND MX285	03-13
FUEL INJECTION PUMP, MX255 AND MX285	03-08
FUEL INJECTION PUMP, MX255 AND MX285	03-09
FUEL INJECTION PUMP, MX255 AND MX285	03-10
FUEL INJECTION PUMP, MX255 AND MX285	03-11
FUEL INJECTION PUMP, MX255 AND MX285	03-12
FUEL INJECTION SYSTEM, MX210 AND MX230	03-01
FUEL INJECTION SYSTEM, MX255 AND MX285	03-02
FUEL LINES WITH INLINE FILTER, MX210 AND MX230	03-21
FUEL LINES WITH INLINE FILTER, MX255 AND MX285	03-23
FUEL LINES WITH SEPARATOR FILTER, MX210 AND MX230	03-22
FUEL LINES WITH SEPARATOR FILTER, MX255 AND MX285	03-24
FUEL SEPARATOR FILTER	03-25
FUEL TANKS	03-20

ALPHABETICAL INDEX

	FIGURE
GASKET KIT - BASIC SERVICE ENGINE, MX210 AND MX230	02-48
GASKET KIT - BASIC SERVICE ENGINE, MX255 AND MX285	02-49
GASKET KIT - CYLINDER BLOCK, MX210 AND MX230	02-46
GASKET KIT - CYLINDER BLOCK, MX255 AND MX285	02-47
GASKET KIT - VALVE GRIND, MX210 AND MX230	02-44
GASKET KIT - VALVE GRIND, MX255 AND MX285	02-45
GROUND SPEED SENSOR	04-34
HAND THROTTLE, MX210 AND MX230	03-16
HAND THROTTLE, MX255 AND MX285	03-17
HARNESS - CAB	04-07
HARNESS - CAB ROOF, SHELF AND CD CHANGER	04-08
HARNESS - CHASSIS	04-05
HARNESS - ENGINE, MX210 AND MX230	04-01
HARNESS - ENGINE, MX255 AND MX285	04-02
HARNESS - REMOTE HYDRAULIC VALVE	04-06
HARNESS - SUSPENDED AXLE	04-09
HEADLAMPS	04-25
HEADLAMPS - AUXILIARY	04-26
HEATER SYSTEM	09-40
HITCH - DRAFT CONTROL PINS	09-54
HITCH - LIFT LINKS	09-50
HITCH - LOWER LIFT LINKS	09-51
HITCH - POSITION SENSOR	09-53
HITCH - SUPPORTS AND ROCKSHAFT	09-48
HITCH - SWAY LIMITER	09-52
HITCH - TOP LINK	09-49
HITCH VALVE ASSEMBLY	08-21
HOOD FIXED	09-12
HOOD TILTING	09-10
HUB ASSEMBLY - REAR WHEEL	06-47
HYDRAULIC LIFT LINK - HITCH, RIGHT HAND	08-10
HYDRAULIC SYSTEM - 3RD OIL COOLER	08-02
HYDRAULIC SYSTEM - CHARGE PUMP	08-03
HYDRAULIC SYSTEM - CREEP SPEED	08-07
HYDRAULIC SYSTEM - FRONT HITCH	08-11
HYDRAULIC SYSTEM - HITCH	08-09
HYDRAULIC SYSTEM - MFD DIFFERENTIAL LOCK	05-05
HYDRAULIC SYSTEM - MOTOR RETURN	08-15
HYDRAULIC SYSTEM - OIL COOLER	08-01
HYDRAULIC SYSTEM - PISTON PUMP AND FILTER, HIGH FLOW CAPACITY	08-05
HYDRAULIC SYSTEM - PISTON PUMP AND FILTER, STANDARD FLOW CAPACITY	08-04
HYDRAULIC SYSTEM - POWER BEYOND	08-14
HYDRAULIC SYSTEM - PTO/DIFFERENTIAL LOCK VALVE	08-12
HYDRAULIC SYSTEM - REGULATED PRESSURE	08-06
HYDRAULIC SYSTEM - REMOTE COUPLERS	08-13
HYDRAULIC SYSTEM - SUSPENDED AXLE	05-06
HYDRAULIC SYSTEM - TRANSMISSION LUBE	08-08
IMPLEMENT CONNECTORS AND MOUNTING	04-35
ISO 11783 HARNESS AND MONITOR	04-27
KIT ENGINE OVERHAUL, MX210 AND MX230	02-38
KIT ENGINE OVERHAUL, MX255 AND MX285	02-39
LAMP - BEACON	04-32
LAMPS - CAB ROOF	04-29
LAMPS - FRONT POSITION AND WORK	04-28
LAMPS - REAR FENDER AND REMOTE HITCH SWITCH	04-30
LEVER ASSEMBLY - TRANSMISSION CONTROL	06-31
MANIFOLD VALVE ASSEMBLY	08-19
MANIFOLDS, MX210 AND MX230	02-15
MANIFOLDS, MX255 AND MX285	02-16

ALPHABETICAL INDEX

	FIGURE
MFD AXLE - DRIVE SHAFT	06-24
MFD AXLE HOUSING ASSEMBLY - STANDARD WITH 10 BOLT HUB, WITH DIFFERENTIAL LOCK	05-11
MFD AXLE HOUSING ASSEMBLY - STANDARD WITH 10 BOLT HUB, WITHOUT DIFFERENTIAL LOCK	05-10
MFD AXLE HOUSING ASSEMBLY - STANDARD WITH 12 BOLT HUB, WITH DIFFERENTIAL LOCK	05-12
MFD AXLE HOUSING ASSEMBLY - SUSPENDED WITH 10 BOLT HUB, WITH DIFFERENTIAL LOCK	05-14
MFD AXLE HOUSING ASSEMBLY - SUSPENDED WITH 10 BOLT HUB, WITHOUT DIFFERENTIAL LOCK	05-13
MFD AXLE HOUSING ASSEMBLY - SUSPENDED WITH 12 BOLT HUB, WITH DIFFERENTIAL LOCK	05-15
MIRRORS	09-22
MODULE, ENGINE CONTROL, MX255 AND MX285	04-04
MONITOR MOUNTING - CAB A POST	09-37
MONITOR MOUNTING - CAB ROOF	09-36
OIL PUMP AND OIL PAN	02-25
PARK AND EMERGENCY BRAKE - BRAKE ASSEMBLY	07-10
PARK AND EMERGENCY BRAKE - HYDRAULIC SYSTEM	07-08
PARK AND EMERGENCY BRAKE - LEVER AND LINKAGE	07-07
PARK AND EMERGENCY BRAKE - VALVE ASSEMBLY	07-09
PARK BRAKE - RELEASE, ASN AJB0355923	07-12
PARK BRAKE - RELEASE, BSN AJB0355923	07-11
PEDAL - INCHING	06-30
PISTONS - CONNECTING RODS, MX210 AND MX230	02-42
PISTONS - CONNECTING RODS, MX255 AND MX285	02-43
PLATE ASSEMBLY - VALVE MOUNTING, LEFT HAND SIDE	06-06
PLATE ASSEMBLY - VALVE MOUNTING, TOP	06-07
POWER BEYOND VALVE ASSEMBLY	08-27
POWER DISTRIBUTION	04-03
POWER TAKE OFF ASSEMBLY - INPUT SHAFT, ASN AJB0355026	06-40
POWER TAKE OFF ASSEMBLY - INPUT SHAFT, BSN AJB0355026	06-39
POWER TAKE OFF ASSEMBLY - OUTPUT SHAFT, DUAL SPEED	06-42
POWER TAKE OFF ASSEMBLY - OUTPUT SHAFT, SINGLE SPEED - ASN AJB0355026	06-44
POWER TAKE OFF ASSEMBLY - OUTPUT SHAFT, SINGLE SPEED, BSN AJB0355026	06-43
POWER TAKE OFF ASSEMBLY - REDUCTION GEAR, DUAL SPEED	06-41
POWER TAKE OFF ASSEMBLY - SHIELDS	06-45
PRIORITY AND REGULATOR VALVE ASSEMBLY	08-16
PTO AND DIFFERENTIAL LOCK VALVE ASSEMBLY	08-17
PUMP, FUEL TRANSFER, MX255 AND MX285	03-05
RADIATOR AND FAN SHROUD	02-01
RADIATOR ASSEMBLY	02-02
RADIOS, SPEAKERS AND ANTENNAS	04-33
RANGE TRANSMISSION - COUNTERSHAFT	06-20
RANGE TRANSMISSION - HOUSING, ASN AJB0355923	06-16
RANGE TRANSMISSION - HOUSING, BSN AJB0355338	06-14
RANGE TRANSMISSION - HOUSING, BTW AJB0355338 & AJB0355923	06-15
RANGE TRANSMISSION - INPUT SHAFT	06-18
RANGE TRANSMISSION - MASTER CLUTCH	06-19
RANGE TRANSMISSION - MFD CLUTCH	06-23
REAR AXLE - 4 X 98 INCH, MX210 AND MX230	06-36
REAR AXLE - 4 X 98 INCH, MX255 AND MX285	06-37
REAR AXLE - HOUSING	06-32
REAR AXLE - PLANETARY, MX210, MX230 AND MX255	06-34
REAR AXLE - PLANETARY, MX285	06-35
REAR WHEEL WEIGHTS	06-49
REMOTE HYDRAULIC CONTROL VALVE	08-20
REMOTE HYDRAULIC COUPLING MOUNTING	08-22

ALPHABETICAL INDEX

	FIGURE
REMOTE HYDRAULIC COUPLINGS	08-23
REMOTE HYDRAULIC VALVE STACK	08-18
SEAT - INSTRUCTIONAL	09-33
SEAT ASSEMBLY	09-29
SEMI ACTIVE SUSPENSION ASSEMBLY - SEAT	09-32
SOLENOID - STARTER	04-21
SOLID STEEL REAR WHEELS	06-46
SPACER - DUAL FRONT WHEELS	05-27
SPACER - DUAL REAR WHEELS	06-48
SPEED TRANSMISSION - COUNTERSHAFT WITH CREEP SPEED	06-11
SPEED TRANSMISSION - COUNTERSHAFT WITHOUT CREEP SPEED	06-10
SPEED TRANSMISSION - HOUSING, ASN AJB0355923	06-05
SPEED TRANSMISSION - HOUSING, BSN AJB0355338	06-03
SPEED TRANSMISSION - HOUSING, BTW AJB0355338 & AJB0355923	06-04
SPEED TRANSMISSION - INPUT SHAFT WITH CREEP SPEED	06-09
SPEED TRANSMISSION - INPUT SHAFT WITHOUT CREEP SPEED	06-08
SPEED TRANSMISSION - OUTPUT SHAFT FRONT CLUTCH	06-12
SPEED TRANSMISSION - OUTPUT SHAFT REAR CLUTCH	06-13
STARTER - MOUNTING	04-19
STARTER ASSEMBLY	04-20
STEERING COLUMN ASSEMBLY	05-02
STEERING CYLINDER ASSEMBLY - MFD, 10 BOLT HUB	05-23
STEERING CYLINDER ASSEMBLY - MFD, 12 BOLT HUB	05-24
STEERING SYSTEM - MFD, ASN JAZ126070	05-04
STEERING SYSTEM - MFD, BSN JAZ126070	05-03
STEERING WHEEL AND COLUMN	05-01
SUSPENSION ASSEMBLY - SEAT	09-31
THERMOSTAT - FILTER, WATER	02-31
TRAILER BRAKES - HYDRAULIC, EXCEPT ITALY	07-13
TRAILER BRAKES - HYDRAULIC, ITALY ONLY	07-14
TRAILER BRAKES - PNEUMATIC, AIR COMPRESSOR MOUNTING AND DRIVE	07-15
TRAILER BRAKES - PNEUMATIC, COUPLERS, EXCEPT ITALY	07-19
TRAILER BRAKES - PNEUMATIC, COUPLERS, ITALY ONLY	07-20
TRAILER BRAKES - PNEUMATIC, RESERVOIR, EXCEPT ITALY	07-16
TRAILER BRAKES - PNEUMATIC, RESERVOIR, ITALY ONLY	07-17
TRAILER BRAKES - PNEUMATIC, VALVES	07-18
TRAILER HITCH - AUTO CLEVIS, 32 MM, GERMANY ONLY (CRAMER)	09-59
TRAILER HITCH - AUTO CLEVIS, 37 MM, GERMANY ONLY (CRAMER)	09-58
TRAILER HITCH - AUTO CLEVIS, 38 MM, GERMANY ONLY (CBM)	09-60
TRAILER HITCH - AUTO CLEVIS, GERMANY ONLY (CRAMER)	09-57
TRAILER HITCH - MANUAL PIN, FRANCE ONLY (CBM)	09-56
TRAILER HITCH - MANUAL PIN, FRANCE ONLY (CRAMER)	09-55
TRAILER HITCH - MANUAL PIN, ITALY ONLY (CBM)	09-61
TRANSMISSION - DIFFERENTIAL	06-22
TRANSMISSION - PINION SHAFT AND GEARS	06-21
TRANSMISSION - PUMP DRIVE	06-38
TRANSMISSION CONTROL VALVE LOCATION	06-25
TRANSMISSION DRIVE SHAFT	06-01
TRANSMISSION DROP BOX	06-02
TURBOCHARGER ASSEMBLY, MX210 AND MX230	02-19
TURBOCHARGER ASSEMBLY, MX255 AND MX285	02-20
TURBOCHARGER SYSTEM, MX210 AND MX230	02-17
TURBOCHARGER SYSTEM, MX255 AND MX285	02-18
VALVE ASSEMBLY - TRANSMISSION CONTROL (450721A2)	06-27
VALVE ASSEMBLY - TRANSMISSION CONTROL (450726A2)	06-28
VALVE ASSEMBLY - TRANSMISSION CONTROL (450728A2)	06-29
VALVE ASSEMBLY - TRANSMISSION CONTROL (450729A2)	06-26
VALVE ASSY - INCHING	06-17
VALVE ASSY - SUSPENDED MFD AXLE	05-07

ALPHABETICAL INDEX

	FIGURE
WASTEGATE ACTUATOR, MX210 AND MX230	02-21
WASTEGATE ACTUATOR, MX255 AND MX285	02-22
WATER PUMP SYSTEM, MX210 AND MX230	02-11
WATER PUMP SYSTEM, MX255 AND MX285	02-12
WINDSHIELD WASHER FRONT AND REAR	04-24
WINDSHIELD WIPER ASSEMBLY - FRONT AND REAR	04-23
WORK LAMPS - ROOF AND REAR FENDERS	04-31

TABLE OF CONTENTS

02-01	RADIATOR AND FAN SHROUD
02-02	RADIATOR ASSEMBLY
02-03	DEAERATION SYSTEM
02-04	AIR INDUCTION SYSTEM - STANDARD DUTY
02-05	AIR INDUCTION SYSTEM - SEVERE DUTY
02-06	AFTERCOOLER
02-07	ETHER START SYSTEM
02-08	EXHAUST SYSTEM
02-09	ENGINE MOUNTING
02-10	FLYWHEEL SHIELDS
02-11	WATER PUMP SYSTEM, MX210 AND MX230
02-12	WATER PUMP SYSTEM, MX255 AND MX285
02-13	FRONT GEAR COVER, MX210 AND MX230
02-14	FRONT GEAR COVER, MX255 AND MX285
02-15	MANIFOLDS, MX210 AND MX230
02-16	MANIFOLDS, MX255 AND MX285
02-17	TURBOCHARGER SYSTEM, MX210 AND MX230
02-18	TURBOCHARGER SYSTEM, MX255 AND MX285
02-19	TURBOCHARGER ASSEMBLY, MX210 AND MX230
02-20	TURBOCHARGER ASSEMBLY, MX255 AND MX285
02-21	WASTEGATE ACTUATOR, MX210 AND MX230
02-22	WASTEGATE ACTUATOR, MX255 AND MX285
02-23	FILTER AND COOLER - OIL, MX210 AND MX230
02-24	FILTER AND COOLER - OIL, MX255 AND MX285
02-25	OIL PUMP AND OIL PAN
02-26	CYLINDER HEAD - COVER, MX210 AND MX230, BSN JAZ132841
02-27	CYLINDER HEAD - COVER, MX210 AND MX230, ASN JAZ132841
02-28	CYLINDER HEAD - COVER, MX255 AND MX285
02-29	CYLINDER HEAD - VALVE MECHANISM, MX210 AND MX230
02-30	CYLINDER HEAD - VALVE MECHANISM, MX255 AND MX285
02-31	THERMOSTAT - FILTER, WATER
02-32	CRANKCASE, BREATHER, MX210 AND MX230, BSN JAZ132841
02-33	CRANKCASE, BREATHER, MX255 AND MX285
02-34	CAMSHAFT, MX210 AND MX230
02-35	CAMSHAFT, MX255 AND MX285
02-36	CYLINDER BLOCK, MX210 AND MX230
02-37	CYLINDER BLOCK, MX255 AND MX285
02-38	KIT ENGINE OVERHAUL, MX210 AND MX230
02-39	KIT ENGINE OVERHAUL, MX255 AND MX285
02-40	CRANKSHAFT
02-41	FLYWHEEL
02-42	PISTONS - CONNECTING RODS, MX210 AND MX230
02-43	PISTONS - CONNECTING RODS, MX255 AND MX285
02-44	GASKET KIT - VALVE GRIND, MX210 AND MX230
02-45	GASKET KIT - VALVE GRIND, MX255 AND MX285
02-46	GASKET KIT - CYLINDER BLOCK, MX210 AND MX230
02-47	GASKET KIT - CYLINDER BLOCK, MX255 AND MX285
02-48	GASKET KIT - BASIC SERVICE ENGINE, MX210 AND MX230
02-49	GASKET KIT - BASIC SERVICE ENGINE, MX255 AND MX285
03-01	FUEL INJECTION SYSTEM, MX210 AND MX230
03-02	FUEL INJECTION SYSTEM, MX255 AND MX285
03-03	ANEROID AND WASTEGATE SYSTEM, MX210 AND MX230
03-04	FUEL FILTER - PUMP, TRANSFER, MX210 AND MX230
03-05	PUMP, FUEL TRANSFER, MX255 AND MX285
03-06	FUEL FILTER AND CONNECTIONS, MX255 AND MX285

TABLE OF CONTENTS

03-07	FUEL INJECTION - PUMP AND DRIVE, MX210 AND MX230
03-08	FUEL INJECTION PUMP, MX255 AND MX285
03-09	FUEL INJECTION PUMP, MX255 AND MX285
03-10	FUEL INJECTION PUMP, MX255 AND MX285
03-11	FUEL INJECTION PUMP, MX255 AND MX285
03-12	FUEL INJECTION PUMP, MX255 AND MX285
03-13	FUEL INJECTION PUMP - GEAR AND MOUNTING BRACKETS, MX255 AND MX285
03-14	FUEL INJECTION - NOZZLE, MX210 AND MX230
03-15	FUEL INJECTION - NOZZLE , MX255 AND MX285
03-16	HAND THROTTLE, MX210 AND MX230
03-17	HAND THROTTLE, MX255 AND MX285
03-18	FOOT THROTTLE, MX210 AND MX230
03-19	FOOT THROTTLE, MX255 AND MX285
03-20	FUEL TANKS
03-21	FUEL LINES WITH INLINE FILTER, MX210 AND MX230
03-22	FUEL LINES WITH SEPARATOR FILTER, MX210 AND MX230
03-23	FUEL LINES WITH INLINE FILTER, MX255 AND MX285
03-24	FUEL LINES WITH SEPARATOR FILTER, MX255 AND MX285
03-25	FUEL SEPARATOR FILTER
04-01	HARNESS - ENGINE, MX210 AND MX230
04-02	HARNESS - ENGINE, MX255 AND MX285
04-03	POWER DISTRIBUTION
04-04	MODULE, ENGINE CONTROL, MX255 AND MX285
04-05	HARNESS - CHASSIS
04-06	HARNESS - REMOTE HYDRAULIC VALVE
04-07	HARNESS - CAB
04-08	HARNESS - CAB ROOF, SHELF AND CD CHANGER
04-09	HARNESS - SUSPENDED AXLE
04-10	ELECTRICAL COMPONENT MOUNTING
04-11	ELECTRICAL COMPONENT MOUNTING - FUSES
04-12	A-POST COVER - INSTRUMENT CLUSTER
04-13	CONTROLS - FRONT CONSOLE
04-14	CONTROLS - RIGHT HAND CONSOLE
04-15	CONTROLS - RIGHT FENDER CONSOLE, WITHOUT ATC
04-16	CONTROLS - RIGHT FENDER CONSOLE, WITH ATC
04-17	ALTERNATOR - MOUNTING
04-18	ALTERNATOR ASSEMBLY - 135 AMPERE
04-19	STARTER - MOUNTING
04-20	STARTER ASSEMBLY
04-21	SOLENOID - STARTER
04-22	BATTERY, BATTERY BOX AND CABLES
04-23	WINDSHIELD WIPER ASSEMBLY - FRONT AND REAR
04-24	WINDSHIELD WASHER FRONT AND REAR
04-25	HEADLAMPS
04-26	HEADLAMPS - AUXILIARY
04-27	ISO 11783 HARNESS AND MONITOR
04-28	LAMPS - FRONT POSITION AND WORK
04-29	LAMPS - CAB ROOF
04-30	LAMPS - REAR FENDER AND REMOTE HITCH SWITCH
04-31	WORK LAMPS - ROOF AND REAR FENDERS
04-32	LAMP - BEACON
04-33	RADIOS, SPEAKERS AND ANTENNAS
04-34	GROUND SPEED SENSOR
04-35	IMPLEMENT CONNECTORS AND MOUNTING
05-01	STEERING WHEEL AND COLUMN

TABLE OF CONTENTS

05-02	STEERING COLUMN ASSEMBLY
05-03	STEERING SYSTEM - MFD, BSN JAZ126070
05-04	STEERING SYSTEM - MFD, ASN JAZ126070
05-05	HYDRAULIC SYSTEM - MFD DIFFERENTIAL LOCK
05-06	HYDRAULIC SYSTEM - SUSPENDED AXLE
05-07	VALVE ASSY - SUSPENDED MFD AXLE
05-08	FRONT AXLE - MOUNTING, MFD
05-09	FRONT AXLE - SUSPENSION, SUSPENDED MFD
05-10	MFD AXLE HOUSING ASSEMBLY - STANDARD WITH 10 BOLT HUB, WITHOUT DIFFERENTIAL LOCK
05-11	MFD AXLE HOUSING ASSEMBLY - STANDARD WITH 10 BOLT HUB, WITH DIFFERENTIAL LOCK
05-12	MFD AXLE HOUSING ASSEMBLY - STANDARD WITH 12 BOLT HUB, WITH DIFFERENTIAL LOCK
05-13	MFD AXLE HOUSING ASSEMBLY - SUSPENDED WITH 10 BOLT HUB, WITHOUT DIFFERENTIAL LOCK
05-14	MFD AXLE HOUSING ASSEMBLY - SUSPENDED WITH 10 BOLT HUB, WITH DIFFERENTIAL LOCK
05-15	MFD AXLE HOUSING ASSEMBLY - SUSPENDED WITH 12 BOLT HUB, WITH DIFFERENTIAL LOCK
05-16	FRONT AXLE DRIVE SHAFT - MFD, WITHOUT DIFFERENTIAL LOCK
05-17	FRONT AXLE DRIVE SHAFT - MFD, WITH DIFFERENTIAL LOCK
05-18	CARRIER AND DIFFERENTIAL - MFD, 10 BOLT HUB, WITHOUT DIFFERENTIAL LOCK
05-19	CARRIER AND DIFFERENTIAL - MFD, 10 BOLT HUB, WITH DIFFERENTIAL LOCK
05-20	CARRIER AND DIFFERENTIAL - MFD, 12 BOLT HUB, WITH DIFFERENTIAL LOCK
05-21	FRONT AXLE PLANETARIES AND HUB - MFD, 10 BOLT HUB
05-22	FRONT AXLE PLANETARIES AND HUB - MFD, 12 BOLT HUB
05-23	STEERING CYLINDER ASSEMBLY - MFD, 10 BOLT HUB
05-24	STEERING CYLINDER ASSEMBLY - MFD, 12 BOLT HUB
05-25	FRONT WHEELS - MFD, 10 BOLT HUB
05-26	FRONT WHEELS - MFD, 12 BOLT HUB
05-27	SPACER - DUAL FRONT WHEELS
06-01	TRANSMISSION DRIVE SHAFT
06-02	TRANSMISSION DROP BOX
06-03	SPEED TRANSMISSION - HOUSING, BSN AJB0355338
06-04	SPEED TRANSMISSION - HOUSING, BTW AJB0355338 & AJB0355923
06-05	SPEED TRANSMISSION - HOUSING, ASN AJB0355923
06-06	PLATE ASSEMBLY - VALVE MOUNTING, LEFT HAND SIDE
06-07	PLATE ASSEMBLY - VALVE MOUNTING, TOP
06-08	SPEED TRANSMISSION - INPUT SHAFT WITHOUT CREEP SPEED
06-09	SPEED TRANSMISSION - INPUT SHAFT WITH CREEP SPEED
06-10	SPEED TRANSMISSION - COUNTERSHAFT WITHOUT CREEP SPEED
06-11	SPEED TRANSMISSION - COUNTERSHAFT WITH CREEP SPEED
06-12	SPEED TRANSMISSION - OUTPUT SHAFT FRONT CLUTCH
06-13	SPEED TRANSMISSION - OUTPUT SHAFT REAR CLUTCH
06-14	RANGE TRANSMISSION - HOUSING, BSN AJB0355338
06-15	RANGE TRANSMISSION - HOUSING, BTW AJB0355338 & AJB0355923
06-16	RANGE TRANSMISSION - HOUSING, ASN AJB0355923
06-17	VALVE ASSY - INCHING
06-18	RANGE TRANSMISSION - INPUT SHAFT
06-19	RANGE TRANSMISSION - MASTER CLUTCH
06-20	RANGE TRANSMISSION - COUNTERSHAFT
06-21	TRANSMISSION - PINION SHAFT AND GEARS
06-22	TRANSMISSION - DIFFERENTIAL
06-23	RANGE TRANSMISSION - MFD CLUTCH

TABLE OF CONTENTS

06-24	MFD AXLE - DRIVE SHAFT
06-25	TRANSMISSION CONTROL VALVE LOCATION
06-26	VALVE ASSEMBLY - TRANSMISSION CONTROL (450729A2)
06-27	VALVE ASSEMBLY - TRANSMISSION CONTROL (450721A2)
06-28	VALVE ASSEMBLY - TRANSMISSION CONTROL (450726A2)
06-29	VALVE ASSEMBLY - TRANSMISSION CONTROL (450728A2)
06-30	PEDAL - INCHING
06-31	LEVER ASSEMBLY - TRANSMISSION CONTROL
06-32	REAR AXLE - HOUSING
06-33	BREATHER - TRANSMISSION
06-34	REAR AXLE - PLANETARY, MX210, MX230 AND MX255
06-35	REAR AXLE - PLANETARY, MX285
06-36	REAR AXLE - 4 X 98 INCH, MX210 AND MX230
06-37	REAR AXLE - 4 X 98 INCH, MX255 AND MX285
06-38	TRANSMISSION - PUMP DRIVE
06-39	POWER TAKE OFF ASSEMBLY - INPUT SHAFT, BSN AJB0355026
06-40	POWER TAKE OFF ASSEMBLY - INPUT SHAFT, ASN AJB0355026
06-41	POWER TAKE OFF ASSEMBLY - REDUCTION GEAR, DUAL SPEED
06-42	POWER TAKE OFF ASSEMBLY - OUTPUT SHAFT, DUAL SPEED
06-43	POWER TAKE OFF ASSEMBLY - OUTPUT SHAFT, SINGLE SPEED, BSN AJB0355026
06-44	POWER TAKE OFF ASSEMBLY - OUTPUT SHAFT, SINGLE SPEED - ASN AJB0355026
06-45	POWER TAKE OFF ASSEMBLY - SHIELDS
06-46	SOLID STEEL REAR WHEELS
06-47	HUB ASSEMBLY - REAR WHEEL
06-48	SPACER - DUAL REAR WHEELS
06-49	REAR WHEEL WEIGHTS
07-01	BRAKES - PEDAL BRAKE
07-02	BRAKES - HYDRAULIC SYSTEM, WITHOUT TRAILER BRAKES
07-03	BRAKES - HYDRAULIC SYSTEM, WITH HYDRAULIC TRAILER BRAKES
07-04	BRAKES - HYDRAULIC SYSTEM, WITH PNEUMATIC TRAILER BRAKES
07-05	BRAKES - CONTROL VALVE
07-06	BRAKES - DIFFERENTIAL
07-07	PARK AND EMERGENCY BRAKE - LEVER AND LINKAGE
07-08	PARK AND EMERGENCY BRAKE - HYDRAULIC SYSTEM
07-09	PARK AND EMERGENCY BRAKE - VALVE ASSEMBLY
07-10	PARK AND EMERGENCY BRAKE - BRAKE ASSEMBLY
07-11	PARK BRAKE - RELEASE, BSN AJB0355923
07-12	PARK BRAKE - RELEASE, ASN AJB0355923
07-13	TRAILER BRAKES - HYDRAULIC, EXCEPT ITALY
07-14	TRAILER BRAKES - HYDRAULIC, ITALY ONLY
07-15	TRAILER BRAKES - PNEUMATIC, AIR COMPRESSOR MOUNTING AND DRIVE
07-16	TRAILER BRAKES - PNEUMATIC, RESERVOIR, EXCEPT ITALY
07-17	TRAILER BRAKES - PNEUMATIC, RESERVOIR, ITALY ONLY
07-18	TRAILER BRAKES - PNEUMATIC, VALVES
07-19	TRAILER BRAKES - PNEUMATIC, COUPLERS, EXCEPT ITALY
07-20	TRAILER BRAKES - PNEUMATIC, COUPLERS, ITALY ONLY
08-01	HYDRAULIC SYSTEM - OIL COOLER
08-02	HYDRAULIC SYSTEM - 3RD OIL COOLER
08-03	HYDRAULIC SYSTEM - CHARGE PUMP
08-04	HYDRAULIC SYSTEM - PISTON PUMP AND FILTER, STANDARD FLOW CAPACITY
08-05	HYDRAULIC SYSTEM - PISTON PUMP AND FILTER, HIGH FLOW CAPACITY
08-06	HYDRAULIC SYSTEM - REGULATED PRESSURE
08-07	HYDRAULIC SYSTEM - CREEP SPEED
08-08	HYDRAULIC SYSTEM - TRANSMISSION LUBE
08-09	HYDRAULIC SYSTEM - HITCH

TABLE OF CONTENTS

08-10	HYDRAULIC LIFT LINK - HITCH, RIGHT HAND
08-11	HYDRAULIC SYSTEM - FRONT HITCH
08-12	HYDRAULIC SYSTEM - PTO/DIFFERENTIAL LOCK VALVE
08-13	HYDRAULIC SYSTEM - REMOTE COUPLERS
08-14	HYDRAULIC SYSTEM - POWER BEYOND
08-15	HYDRAULIC SYSTEM - MOTOR RETURN
08-16	PRIORITY AND REGULATOR VALVE ASSEMBLY
08-17	PTO AND DIFFERENTIAL LOCK VALVE ASSEMBLY
08-18	REMOTE HYDRAULIC VALVE STACK
08-19	MANIFOLD VALVE ASSEMBLY
08-20	REMOTE HYDRAULIC CONTROL VALVE
08-21	HITCH VALVE ASSEMBLY
08-22	REMOTE HYDRAULIC COUPLING MOUNTING
08-23	REMOTE HYDRAULIC COUPLINGS
08-24	CYLINDER ASSEMBLY - HITCH (305022A2)
08-25	CYLINDER ASSY - HITCH (278277A3)
08-26	CYLINDER ASSEMBLY - HITCH (278419A3)
08-27	POWER BEYOND VALVE ASSEMBLY
09-01	FRONT FRAME
09-02	FRONT TOW CLEVIS
09-03	FRONT WEIGHTS
09-04	FRONT WEIGHTS
09-05	FRONT HITCH
09-06	FENDERS - FRONT, NARROW
09-07	FENDERS - FRONT, WIDE
09-08	FENDERS - REAR
09-09	FENDERS - REAR, EXTRA WIDE
09-10	HOOD TILTING
09-11	FAN SHIELDS
09-12	HOOD FIXED
09-13	CAB - MOUNTING AND FRAME, BSN AJB0355923
09-14	CAB - MOUNTING AND FRAME, ASN AJB0355923
09-15	CAB - ROOF
09-16	CAB - EXTERIOR TRIM
09-17	CAB - STEPS
09-18	CAB - FRONT WINDOW STEP
09-19	CAB - DOOR
09-20	CAB - REAR WINDOW
09-21	CAB - FIXED GLASS
09-22	MIRRORS
09-23	CAB - HEADLINER, STANDARD TRIM
09-24	CAB - HEADLINER, DELUXE AND LUXURY TRIM
09-25	CAB - FLOOR MAT AND INSULATION
09-26	CAB - TRIM, FENDERS
09-27	CAB - TRIM, CAB POSTS
09-28	CAB - INSTRUMENT PANEL
09-29	SEAT ASSEMBLY
09-30	CUSHION ASSEMBLY - SEAT
09-31	SUSPENSION ASSEMBLY - SEAT
09-32	SEMI ACTIVE SUSPENSION ASSEMBLY - SEAT
09-33	SEAT - INSTRUCTIONAL
09-34	CONSOLE, RIGHT HAND, STANDARD CAB
09-35	CONSOLE, RIGHT HAND, DELUXE AND LUXURY CAB
09-36	MONITOR MOUNTING - CAB ROOF
09-37	MONITOR MOUNTING - CAB A POST

TABLE OF CONTENTS

09-38	AIR CONDITIONING - COMPRESSOR MOUNTING
09-39	AIR CONDITIONING - CONDENSER
09-40	HEATER SYSTEM
09-41	AIR CONDITIONING - CLIMATE CONTROL UNIT, WITHOUT AUTO TEMP CONTROL
09-42	AIR CONDITIONING - CLIMATE CONTROL UNIT, WITH AUTO TEMP CONTROL
09-43	AIR CONDITIONING - AIR FILTER
09-44	AIR CONDITIONING - DUCTS
09-45	CAB - INSULATION
09-46	DRAWBAR AND HAMMERSTRAP
09-47	DRAWBAR AND HAMMERSTRAP - ITALY ONLY
09-48	HITCH - SUPPORTS AND ROCKSHAFT
09-49	HITCH - TOP LINK
09-50	HITCH - LIFT LINKS
09-51	HITCH - LOWER LIFT LINKS
09-52	HITCH - SWAY LIMITER
09-53	HITCH - POSITION SENSOR
09-54	HITCH - DRAFT CONTROL PINS
09-55	TRAILER HITCH - MANUAL PIN, FRANCE ONLY (CRAMER)
09-56	TRAILER HITCH - MANUAL PIN, FRANCE ONLY (CBM)
09-57	TRAILER HITCH - AUTO CLEVIS, GERMANY ONLY (CRAMER)
09-58	TRAILER HITCH - AUTO CLEVIS, 37 MM, GERMANY ONLY (CRAMER)
09-59	TRAILER HITCH - AUTO CLEVIS, 32 MM, GERMANY ONLY (CRAMER)
09-60	TRAILER HITCH - AUTO CLEVIS, 38 MM, GERMANY ONLY (CBM)
09-61	TRAILER HITCH - MANUAL PIN, ITALY ONLY (CBM)
09-62	DECALS
09-63	DECALS - STEYR
09-64	DECALS

SOMMARIO

02-01	RADIATORE E PROTEZIONE DEL VENTILATORE
02-02	GRUPPO DEL RADIATORE
02-03	IMPIANTO DI DISAERAZIONE
02-04	SISTEMA DI ASPIRAZIONE FORZATA DELL ARIA - SERVIZIO STANDARD
02-05	SISTEMA DI ASPIRAZIONE FORZATA DELL ARIA - SERVIZIO PESANTE
02-06	POSTREFRIGERATORE
02-07	IMPIANTO DI AVVIAMENTO AD ETERE
02-08	IMPIANTO DI SCARICO
02-09	SUPPORTO DEL MOTORE
02-10	PROTEZIONI DEL VOLANO
02-11	IMPIANTO DELLA POMPA DELL ACQUA, MX210 E MX230
02-12	IMPIANTO DELLA POMPA DELL ACQUA, MX255 E MX285
02-13	COPERCHIO DELL INGRANAGGIO ANTERIORE, MX210 E MX230
02-14	COPERCHIO DELL INGRANAGGIO ANTERIORE, MX255 E MX285
02-15	COLLETTORI, MX210 E MX230
02-16	COLLETTORI, MX255 E MX285
02-17	IMPIANTO DEL TURBOCOMPRESSORE, MX210 E MX230
02-18	IMPIANTO DEL TURBOCOMPRESSORE, MX255 E MX285
02-19	GRUPPO DEL TURBOCOMPRESSORE, MX210 E MX230
02-20	GRUPPO DEL TURBOCOMPRESSORE, MX255 E MX285
02-21	AZIONATORE DELLA VALVOLA WESTGATE, MX210 E MX230
02-22	AZIONATORE DELLA VALVOLA WESTGATE, MX255 E MX285
02-23	FILTRO E SCAMBIATORE DI CALORE - OLIO, MX210 E MX230
02-24	FILTRO E SCAMBIATORE DI CALORE - OLIO, MX255 E MX285
02-25	POMPA E VASCHETTA DELL OLIO
02-26	TESTA DEI CILINDRI - COPERCHIO, MX210 E MX230, BSN JAZ132841
02-27	TESTA DEI CILINDRI - COPERCHIO, MX210 E MX230, ASN JAZ132841
02-28	TESTA DEI CILINDRI - COPERCHIO, MX255 E MX285
02-29	TESTA DEI CILINDRI - MECCANISMO DELLE VALVOLE, MX210 E MX230
02-30	TESTA DEI CILINDRI - MECCANISMO DELLE VALVOLE, MX255 E MX285
02-31	TERMOSTATO - FILTRO, ACQUA
02-32	CARTER MOTORE, SFIATO, MX210 E MX230, BSN JAZ132841
02-33	CARTER MOTORE, SFIATO, MX255 E MX285
02-34	ALBERO A CAMME, MX210 E MX230
02-35	ALBERO A CAMME, MX255 E MX285
02-36	MONOBLOCCO, MX210 E MX230
02-37	MONOBLOCCO, MX255 E MX285
02-38	KIT PER LA REVISIONE DEL MOTORE, MX210 E MX230
02-39	KIT PER LA REVISIONE DEL MOTORE, MX255 E MX285
02-40	ALBERO A GOMITI
02-41	VOLANO
02-42	PISTONI - BIELLE, MX210 E MX230
02-43	PISTONI - BIELLE, MX255 E MX285
02-44	SERIE DI GUARNIZIONI - SMERIGLIATURA DELLE VALVOLE, MX210 E MX230
02-45	SERIE DI GUARNIZIONI - SMERIGLIATURA DELLE VALVOLE, MX255 E MX285
02-46	SERIE DI GUARNIZIONI - MONOBLOCCO, MX210 E MX230
02-47	SERIE DI GUARNIZIONI - MONOBLOCCO, MX255 E MX285
02-48	SERIE DI GUARNIZIONI - MANUTENZIONE DI BASE MOTORE, MX210 E MX230
02-49	SERIE DI GUARNIZIONI - MANUTENZIONE DI BASE MOTORE, MX255 E MX285
03-01	IMPIANTO DI INIEZIONE DEL COMBUSTIBILE, MX210 E MX230
03-02	IMPIANTO DI INIEZIONE DEL COMBUSTIBILE, MX255 E MX285

SOMMARIO

03-03	IMPIANTO DELL ANEROIDE E DELLA VALVOLA WESTGATE, MX210 E MX230
03-04	FILTRO DEL COMBUSTIBILE - POMPA, TRASFERIMENTO, MX210 E MX230
03-05	POMPA, TRASFERIMENTO DEL COMBUSTIBILE, MX255 E MX285
03-06	FILTRO E COLLEGAMENTI DEL COMBUSTIBILE, MX255 E MX285
03-07	INIEZIONE DEL COMBUSTIBILE - POMPA E TRASMISSIONE, MX210 E MX230
03-08	POMPA DI INIEZIONE DEL COMBUSTIBILE, MX255 E MX285
03-09	POMPA DI INIEZIONE DEL COMBUSTIBILE, MX255 E MX285
03-10	POMPA DI INIEZIONE DEL COMBUSTIBILE, MX255 E MX285
03-11	POMPA DI INIEZIONE DEL COMBUSTIBILE, MX255 E MX285
03-12	POMPA DI INIEZIONE DEL COMBUSTIBILE, MX255 E MX285
03-13	POMPA DI INIEZIONE DEL COMBUSTIBILE - INGRANAGGI E STAFFE DI MONTAGGIO, MX255 E MX285
03-14	INIEZIONE DEL COMBUSTIBILE - UGELLO, MX210 E MX230
03-15	INIEZIONE DEL COMBUSTIBILE - UGELLO, MX255 E MX285
03-16	ACCELERATORE MANUALE, MX210 E MX230
03-17	ACCELERATORE MANUALE, MX255 E MX285
03-18	ACCELERATORE A PEDALE, MX210 E MX230
03-19	ACCELERATORE A PEDALE, MX255 E MX285
03-20	SERBATOI DEL COMBUSTIBILE
03-21	TUBI DI ALIMENTAZIONE DEL COMBUSTIBILE CON FILTRO IN LINEA, MX210 E MX230
03-22	TUBI DI ALIMENTAZIONE DEL COMBUSTIBILE CON FILTRO SEPARATORE, MX210 E MX230
03-23	TUBI DI ALIMENTAZIONE DEL COMBUSTIBILE CON FILTRO IN LINEA, MX255 E MX285
03-24	TUBI DI ALIMENTAZIONE DEL COMBUSTIBILE CON FILTRO SEPARATORE, MX255 E MX285
03-25	FILTRO SEPARATORE DEL COMBUSTIBILE
04-01	CABLAGGIO - MOTORE, MX210 E MX230
04-02	CABLAGGIO - MOTORE, MX255 E MX285
04-03	DISTRIBUZIONE DELLA POTENZA
04-04	CENTRALINA ELETTRONICA, MX255 E MX285
04-05	CABLAGGIO - TELAIO
04-06	CABLAGGIO - VALVOLA IDRAULICA AUSILIARIA
04-07	CABLAGGIO - CABINA
04-08	CABLAGGIO - TETTO, MENSOLA E CD-CHANGER DELLA CABINA
04-09	CABLAGGIO - ASSALE SOSPESO
04-10	SUPPORTO DEI COMPONENTI ELETTRICI
04-11	SUPPORTO DEI COMPONENTI ELETTRICI - FUSIBILI
04-12	COPERCHIO DEL MONTANTE AD A - QUADRO STRUMENTI
04-13	COMANDI - QUADRO FRONTALE
04-14	COMANDI - QUADRO DESTRO
04-15	COMANDI - QUADRO PARAFANGO DESTRO, SENZA COMANDI AUTOMATICI DELLA CABINA
04-16	COMANDI - QUADRO PARAFANGO DESTRO, CON COMANDI AUTOMATICI DELLA CABINA
04-17	ALTERNATORE - SUPPORTO
04-18	GRUPPO DELL ALTERNATORE - 135 AMPERE
04-19	MOTORINO D AVVIAMENTO - SUPPORTO
04-20	GRUPPO DEL MOTORINO DI AVVIAMENTO
04-21	SOLENOIDE - MOTORINO DI AVVIAMENTO

SOMMARIO

04-22	BATTERIA, VANO BATTERIA E CAVIBATERIA, CAIXA DA BATERIA E CABOS
04-23	GRUPPO TERGICRISTALLI - ANTERIORE E POSTERIORE
04-24	LAVACRISTALLI ANTERIORE E POSTERIORE
04-25	FANALI ANTERIORI
04-26	FANALI ANTERIORI - AUSILIARI
04-27	ISO 11783 - CABLAGGIO E MONITOR
04-28	LUCI - ANTERIORI, DI POSIZIONE E DI LAVORO
04-29	LUCI - TETTO DELLA CABINA
04-30	LUCI - POSTERIORI, PARAFANGO E INTERRUTTORE DI COMANDO A DISTANZA DELL ATTACCO
04-31	LUCI DI LAVORO - TETTO E PARAFANGHI POSTERIORI
04-32	LUCI - FARO ROTATIVO
04-33	RADIO, ALTOPARLANTI E ANTENNE
04-34	VOLANTE E PIANTONE DI GUIDA
04-35	GRUPPO DEL PIANTONE DI GUIDA
05-01	VOLANTE E PIANTONE DI GUIDA
05-02	GRUPPO DEL PIANTONE DI GUIDA
05-03	IMPIANTO DI STERZO - MFD, BSN JAZ126070
05-04	IMPIANTO DI STERZO - MFD, ASN JAZ126070
05-05	IMPIANTO IDRAULICO - BLOCCAGGIO DEL DIFFERENZIALE MFD
05-06	IMPIANTO IDRAULICO - ASSALE SOSPESO
05-07	GRUPPO VALVOLA - ASSALE MFD SOSPESO
05-08	ASSALE ANTERIORE - SUPPORTO, MFD
05-09	ASSALE ANTERIORE - SOSPENSIONE, MFD SOSPESO
05-10	GRUPPO DELL ALLOGGIAMENTO DELL ASSALE MFD - STANDARD CON MOZZO A 10 BULLONI
05-11	GRUPPO DELL ALLOGGIAMENTO DELL ASSALE MFD - STANDARD CON MOZZO A 10 BULLONI,
05-12	GRUPPO DELL ALLOGGIAMENTO DELL ASSALE MFD - STANDARD CON MOZZO A 12 BULLONI
05-13	GRUPPO DELL ALLOGGIAMENTO DELL ASSALE MFD - SOSPESO CON MOZZO A 10 BULLONI
05-14	GRUPPO DELL ALLOGGIAMENTO DELL ASSALE MFD - SOSPESO CON MOZZO A 10 BULLONI
05-15	GRUPPO DELL ALLOGGIAMENTO DELL ASSALE MFD - SOSPESO CON MOZZO A 12 BULLONI
05-16	SEMIASSE ANTERIORE - MFD, SENZA BLOCCAGGIO DEL DIFFERENZIALE
05-17	SEMIASSE ANTERIORE - MFD, CON BLOCCAGGIO DEL DIFFERENZIALE
05-18	SUPPORTO E DIFFERENZIALE - MFD, MOZZO A 10 BULLONI, SENZA BLOCCAGGIO DEL DIFFERENZIALE
05-19	SUPPORTO E DIFFERENZIALE - MFD, MOZZO A 10 BULLONI, CON BLOCCAGGIO DEL DIFFERENZIALE
05-20	SUPPORTO E DIFFERENZIALE - MFD, MOZZO A 12 BULLONI, CON BLOCCAGGIO DEL DIFFERENZIALE
05-21	RIDUTTORI FINALI EPICICLOIDALI E MOZZO DELL ASSALE ANTERIORE - MFD, MOZZO A 10 BULLONI
05-22	RIDUTTORI FINALI EPICICLOIDALI E MOZZO DELL ASSALE ANTERIORE - MFD, MOZZO A 12 BULLONI
05-23	GRUPPO DEL CILINDRO DI STERZO - MFD, MOZZO A 10 BULLONI
05-24	GRUPPO DEL CILINDRO DI STERZO - MFD, MOZZO A 12 BULLONI
05-25	RUOTE ANTERIORI - MFD, MOZZO A 10 BULLONI

SOMMARIO

05-26	RUOTE ANTERIORI - MFD, MOZZO A 12 BULLONI
05-27	DISTANZIALE - RUOTE ANTERIORI DOPPIE
06-01	ALBERO DELLA TRASMISSIONE
06-02	SCATOLA DI RINVIO DELLA TRASMISSIONE
06-03	CAMBIO VELOCIT - ALLOGGIAMENTO, BSN AJB0355338
06-04	CAMBIO VELOCIT - ALLOGGIAMENTO, BTW AJB0355338 & AJB0355923
06-05	CAMBIO VELOCIT - ALLOGGIAMENTO, ASN AJB0355923
06-06	GRUPPO PIASTRA DI MONTAGGIO VALVOLA, LATO SINISTRO
06-07	GRUPPO DELLA PIASTRA - SUPPORTO DELLA VALVOLA
06-08	CAMBIO VELOCIT - ALBERO D ENTRATA SENZA MARCIA SUPER RIDOTTA
06-09	CAMBIO VELOCIT - ALBERO D ENTRATA CON MARCIA SUPER RIDOTTA
06-10	CAMBIO VELOCIT - CONTRALBERO SENZA MARCIA SUPER RIDOTTA
06-11	CAMBIO VELOCIT - CONTRALBERO CON MARCIA SUPER RIDOTTA
06-12	CAMBIO VELOCIT - FRIZIONE ANTERIORE DELL ALBERO D USCITA
06-13	CAMBIO VELOCIT - FRIZIONE POSTERIORE DELL ALBERO D USCITA
06-14	CAMBIO GAMMA - ALLOGGIAMENTO, BSN AJB0355338
06-15	CAMBIO GAMMA - ALLOGGIAMENTO, BTW AJB0355338 & AJB0355923
06-16	CAMBIO GAMMA - ALLOGGIAMENTO, ASN AJB0355923
06-17	GRUPPO DELLA VALVOLA - SPOSTAMENTO GRADUALE
06-18	CAMBIO GAMMA - ALBERO D ENTRATA
06-19	CAMBIO GAMMA - FRIZIONE PRINCIPALE
06-20	CAMBIO GAMMA - CONTRALBERO
06-21	TRASMISSIONE - ALBERO A PIGNONE E INGRANAGGI
06-22	TRASMISSIONE - DIFFERENZIALE
06-23	CAMBIO GAMMA - FRIZIONE MFD
06-24	ASSALE MFD - ALBERO MOTORE
06-25	SEDE DELLA VALVOLA DI COMANDO DELLA TRASMISSIONE
06-26	GRUPPO DELLA VALVOLA - COMANDO DELLA TRASMISSIONE (450729A2)
06-27	GRUPPO DELLA VALVOLA - COMANDO DELLA TRASMISSIONE (450721A2)
06-28	GRUPPO DELLA VALVOLA - COMANDO DELLA TRASMISSIONE (450726A2)
06-29	GRUPPO DELLA VALVOLA - COMANDO DELLA TRASMISSIONE (450728A2)
06-30	PEDALE - SPOSTAMENTO GRADUALE
06-31	GRUPPO DELLA LEVA - COMANDO DELLA TRASMISSIONE
06-32	ASSALE POSTERIORE - ALLOGGIAMENTO
06-33	SFIATATOIO - TRASMISSIONE
06-34	ASSALE POSTERIORE - RIDUTTORI FINALI EPICICLOIDALI, MX210, MX230 E MX255
06-35	ASSALE POSTERIORE - RIDUTTORI FINALI EPICICLOIDALI, MX285
06-36	ASSALE POSTERIORE - 4 X 98 IN., MX210 E MX230
06-37	ASSALE POSTERIORE - 4 X 98 IN., MX255 E MX285
06-38	TRASMISSIONE - COMANDO DELLA POMPA
06-39	GRUPPO DELLA PTO - ALBERO D ENTRATA, BSN AJB0355026
06-40	GRUPPO DELLA PTO - ALBERO D ENTRATA, ASN AJB0355026
06-41	GRUPPO DELLA PTO - RIDUTTORE A INGRANAGGI, DOPPIO REGIME
06-42	GRUPPO DELLA PTO - ALBERO D USCITA, DOPPIO REGIME
06-43	GRUPPO DELLA PTO - ALBERO D USCITA, REGIME UNICO, BSN AJB0355026
06-44	GRUPPO DELLA PTO - ALBERO D USCITA, REGIME UNICO - ASN AJB0355026
06-45	GRUPPO DELLA PTO - PROTEZIONI
06-46	RUOTE POSTERIORI IN ACCIAIO CALMATO
06-47	GRUPPO DEL MOZZO - RUOTA POSTERIORE
06-48	DISTANZIALE - RUOTE POSTERIORI DOPPIE
06-49	PESI DELLE RUOTE POSTERIORI

SOMMARIO

07-01	FRENI - FRENO A PEDALE
07-02	FRENI - IMPIANTO IDRAULICO, SENZA FRENI DEL RIMORCHIO
07-03	FRENI - IMPIANTO IDRAULICO, CON FRENI IDRAULICI DEL RIMORCHIO
07-04	FRENI - IMPIANTO IDRAULICO, CON FRENI PNEUMATICI DEL RIMORCHIO
07-05	FRENI - VALVOLA DI COMANDO
07-06	FRENI - DIFFERENZIALE
07-07	FRENO DI STAZIONAMENTO E DI EMERGENZA - LEVA E TIRANTERIA
07-08	FRENO DI STAZIONAMENTO E DI EMERGENZA - IMPIANTO IDRAULICO
07-09	FRENO DI STAZIONAMENTO E DI EMERGENZA - GRUPPO DELLA VALVOLA
07-10	FRENO DI STAZIONAMENTO E DI EMERGENZA - GRUPPO DEI FRENI
07-11	FRENO DI STAZIONAMENTO - RILASCIO, BSN AJB0355923
07-12	FRENO DI STAZIONAMENTO - RILASCIO, ASN AJB0355923
07-13	FRENI DEL RIMORCHIO - IDRAULICI, TRANNE CHE PER L ITALIA
07-14	FRENI DEL RIMORCHIO - IDRAULICI, SOLO PER L ITALIA
07-15	FRENI DEL RIMORCHIO - PNEUMATICI, SUPPORTO E COMANDO DEL COMPRESSORE D ARIA
07-16	FRENI DEL RIMORCHIO - PNEUMATICI, SERBATOIO, TRANNE CHE PER L ITALIA
07-17	FRENI DEL RIMORCHIO - PNEUMATICI, SERBATOIO, SOLO PER L ITALIA
07-18	FRENI DEL RIMORCHIO - PNEUMATICI, VALVOLE
07-19	FRENI DEL RIMORCHIO - PNEUMATICI, GIUNTI DI ACCOPPIAMENTO, TRANNE CHE PER L ITALIA
07-20	FRENI DEL RIMORCHIO - PNEUMATICI, GIUNTI DI ACCOPPIAMENTO, SOLO PER L ITALIA
08-01	IMPIANTO IDRAULICO - SCAMBIATORE DI CALORE DELL OLIO
08-02	IMPIANTO IDRAULICO - TERZO SCAMBIATORE DI CALORE DELL OLIO
08-03	IMPIANTO IDRAULICO - POMPA DI CARICA
08-04	IMPIANTO IDRAULICO - POMPA E FILTRO DEI PISTONI, A PORTATA STANDARD
08-05	IMPIANTO IDRAULICO - POMPA E FILTRO DEI PISTONI, AD ALTA PORTATA
08-06	IMPIANTO IDRAULICO - PRESSIONE REGOLATA
08-07	IMPIANTO IDRAULICO - MARCIA SUPER RIDOTTA
08-08	IMPIANTO IDRAULICO - LUBRIFICAZIONE DELLA TRASMISSIONE
08-09	IMPIANTO IDRAULICO - ATTACCO
08-10	
08-11	IMPIANTO IDRAULICO - ATTACCO ANTERIORE
08-12	IMPIANTO IDRAULICO - VALVOLA DI BLOCCAGGIO DEL DIFFERENZIALE E DELLA PTO
08-13	IMPIANTO IDRAULICO - GIUNTI DI ACCOPPIAMENTO AUSILIARI
08-14	IMPIANTO IDRAULICO - POWER BEYOND
08-15	IMPIANTO IDRAULICO - RITORNO DEL MOTORE
08-16	GRUPPO DELLE VALVOLE PRIORITARIA E DEL REGOLATORE
08-17	GRUPPO DELLA VALVOLA DI BLOCCAGGIO DELLA PTO E DEL DIFFERENZIALE
08-18	TUBO DELLA VALVOLA IDRAULICA AUSILIARIA
08-19	GRUPPO DELLA VALVOLA DEL COLLETTORE
08-20	VALVOLA DI COMANDO IDRAULICA AUSILIARIA
08-21	SENSORE DELLA VALVOLA DELL ATTACCO
08-22	SUPPORTO DEL GIUNTO DI ACCOPPIAMENTO DELLE VALVOLE AUSILIARIE
08-23	GIUNTI DI ACCOPPIAMENTO IDRAULICI AUSILIARI
08-24	GRUPPO DEL CILINDRO - ATTACCO (305022A2)
08-25	GRUPPO DEL CILINDRO - ATTACCO (278277A3)
08-26	GRUPPO DEL CILINDRO - ATTACCO (278419A3)
08-27	GRUPPO VALVOLA POWER BEYOND

SOMMARIO

09-01	TELAIO ANTERIORE
09-02	MANIGLIONE DI TRAINO ANTERIORE
09-03	PESI ANTERIORI
09-04	PESI ANTERIORI
09-05	ATTACCO ANTERIORE
09-06	PARAFANGHI - ANTERIORI, STRETTI
09-07	PARAFANGHI - ANTERIORI, LARGHI
09-08	PARAFANGHI - POSTERIORI
09-09	PARAFANGHI - POSTERIORI, EXTRA LARGHI
09-10	RIBALTAMENTO DEL COFANO
09-11	PROTEZIONI DEL VENTILATORE
09-12	COFANO FISSO
09-13	CABINA - SUPPORTO E TELAIO, BSN AJB0355923
09-14	CABINA - SUPPORTO E TELAIO, ASN AJB0355923
09-15	CABINA - TETTO
09-16	CABINA - RIFINITURA ESTERIORE
09-17	CABINA - PREDELLE
09-18	CABINA - PREDELLA DEL PARABREZZA
09-19	CABINA - SPORTELLO
09-20	CABINA - LUNOTTO
09-21	CABINA - CRISTALLO FISSO
09-22	SPECCHIETTI
09-23	CABINA - CONSOLLE SUPERIORE, RIFINITURA STANDARD
09-24	CABINA - CONSOLLE SUPERIORE, RIFINITURE DELUXE E LUXURY
09-25	CABINA - TAPPETINO E ISOLAMENTO
09-26	CABINA - RIFINITURE, PARAFANGHI
09-27	CABINA - RIFINITURE, MONTANTI
09-28	CABINA - QUADRO STRUMENTI
09-29	GRUPPO DEL SEDILE
09-30	GRUPPO DEL CUSCINO - SEDILE
09-31	GRUPPO DELLE SOSPENSIONI - SEDILE
09-32	GRUPPO DELLA SOSPENSIONE SEMIATTIVA - SEDILE
09-33	SEDILE - ADDESTRAMENTO
09-34	CONSOLLE, DESTRA, CABINA STANDARD
09-35	CONSOLLE, DESTRA, CABINA DELUXE E LUXURY
09-36	SUPPORTO DEL DISPOSITIVO DI CONTROLLO - TETTO DELLA CABINA
09-37	SUPPORTO DEL DISPOSITIVO DI CONTROLLO - MONTANTE AD A DELLA CABINA
09-38	CLIMATIZZATORE - SUPPORTO DEL COMPRESSORE
09-39	CLIMATIZZATORE - CONDENSATORE
09-40	IMPIANTO DI RISCALDAMENTO
09-41	CLIMATIZZATORE - UNIT DI COMANDO DEL CLIMA, SENZA COMANDO AUTO TEMP
09-42	CLIMATIZZATORE - UNIT DI COMANDO DEL CLIMA, CON COMANDO AUTO TEMP
09-43	CLIMATIZZATORE - FILTRO DELL ARIA
09-44	CLIMATIZZATORE - CONDOTTI
09-45	CABINA - ISOLAMENTO
09-46	BARRA DI TRAINO E PERNO D ATTACCO AUTOMATICO
09-47	BARRA DI TRAINO E PERNO D ATTACCO AUTOMATICO - SOLO PER L ITALIA
09-48	ATTACCO - SUPPORTI E ALBERO BILANCIERE
09-49	ATTACCO - TIRANTE SUPERIORE
09-50	ATTACCO - TIRANTI DI SOLLEVAMENTO

SOMMARIO

09-51	ATTACCO - TIRANTI DI SOLLEVAMENTO INFERIORI
09-52	ATTACCO - LIMITATORE DI OSCILLAZIONE
09-53	ATTACCO - SENSORE DI POSIZIONE
09-54	ATTACCO - PERNI DI COMANDO DEL CARICO
09-55	ATTACCO DEL RIMORCHIO - PERNO MANUALE, SOLO PER LA FRANCIA (CRAMER)
09-56	ATTACCO DEL RIMORCHIO - PERNO MANUALE, SOLO PER LA FRANCIA (CBM)
09-57	ATTACCO DEL RIMORCHIO - MANIGLIONE CON PERNO AUTOMATICO, SOLO PER LA GERMANIA (CRAMER)
09-58	ATTACCO DEL RIMORCHIO - MANIGLIONE CON PERNO AUTOMATICO, 37 MM, SOLO PER LA GERMANIA (CRAMER)
09-59	ATTACCO DEL RIMORCHIO - MANIGLIONE CON PERNO AUTOMATICO, 32 MM, SOLO PER LA GERMANIA (CRAMER)
09-60	ATTACCO DEL RIMORCHIO - MANIGLIONE CON PERNO AUTOMATICO, 38 MM, SOLO PER LA GERMANIA (CBM)
09-61	ATTACCO DEL RIMORCHIO - PERNO MANUALE, SOLO PER L ITALIA (CBM)
09-62	ETICHETTE DI SICUREZZA
09-63	ETICHETTE DI SICUREZZA - STEYR
09-64	ETICHETTE DI SICUREZZA

TABLE DES MATIÈRES

02-01	RADIATEUR ET DÉFLECTEUR DU VENTILATEUR
02-02	RADIATEUR
02-03	SYSTÈME DE DÉSAÉRATION
02-04	SYSTÈME D INDUCTION D AIR - SERVICE STANDARD
02-05	SYSTÈME D INDUCTION D AIR - SERVICE INTENSIF
02-06	REFROIDISSEUR INTERMÉDIAIRE
02-07	SYSTÈME DE DÉMARRAGE L ÉTHER
02-08	SYSTÈME D ÉCHAPPEMENT
02-09	MONTAGE DU MOTEUR
02-10	GARANTS DU VOLANT MOTEUR
02-11	CIRCUIT DE LA POMPE EAU MX210 ET MX230
02-12	CIRCUIT DE LA POMPE EAU MX255 ET MX285
02-13	COUVERCLE DU PIGNON AVANT, MX210 ET MX230
02-14	COUVERCLE DU PIGNON AVANT, MX255 ET MX285
02-15	COLLECTEURS, MX210 ET MX230
02-16	COLLECTEURS, MX255 ET MX285
02-17	CIRCUIT DU TURBOCOMPRESSEUR, MX210 ET MX230
02-18	CIRCUIT DU TURBOCOMPRESSEUR, MX255 ET MX285
02-19	TURBOCOMPRESSEUR, MX210 ET MX230
02-20	TURBOCOMPRESSEUR, MX255 ET MX285
02-21	SOUPAPE DE DÉCHARGE - ACTIONNEUR, MX210 ET MX230
02-22	SOUPAPE DE DÉCHARGE - ACTIONNEUR, MX255 ET MX285
02-23	FILTRE ET REFROIDISSEUR D HUILE, MX210 ET MX230
02-24	FILTRE ET REFROIDISSEUR D HUILE, MX255 ET MX285
02-25	POMPE ET CARTER D HUILE
02-26	COUVRE-CULASSE, MX210 ET MX230, BSN JAZ132841
02-27	COUVRE-CULASSE, MX210 ET MX230, ASN JAZ132841
02-28	COUVRE-CULASSE, MX255 ET MX285
02-29	CULASSE - MÉCANISME DE SOUPAPES, MX210 ET MX230
02-30	CULASSE - MÉCANISME DE SOUPAPES, MX255 ET MX285
02-31	THERMOSTAT - FILTRE EAU
02-32	RENIFLARD DU CARTER MOTEUR, MX210 ET MX230, BSN JAZ132841
02-33	RENIFLARD DU CARTER MOTEUR, MX255 ET MX285
02-34	ARBRE CAME, MX210 ET MX230
02-35	ARBRE CAME, MX255 ET MX285
02-36	BLOC-CYLINDRES , MX210 ET MX230
02-37	BLOC-CYLINDRES , MX255 ET MX285
02-38	KIT DE RÉVISION DU MOTEUR, MX210 ET MX230
02-39	KIT DE RÉVISION DU MOTEUR, MX255 ET MX285
02-40	VILBREQUIN
02-41	VOLANT MOTEUR
02-42	TIGES DE CONNEXION DES PISTONS, MX210 ET MX230
02-43	TIGES DE CONNEXION DES PISTONS, MX255 ET MX285
02-44	KIT DE JOINTS D ÉTANCHÉITÉ POUR SOUPAPE MEULÉE, MX210 ET MX230
02-45	KIT DE JOINTS D ÉTANCHÉITÉ POUR SOUPAPE MEULÉE, MX255 ET MX285
02-46	KIT DE JOINTS D ÉTANCHÉITÉ POUR BLOC-CYLINDRES, MX210 ET MX230
02-47	KIT DE JOINTS D ÉTANCHÉITÉ POUR BLOC-CYLINDRES, MX255 ET MX285
02-48	KIT DE JOINTS D ÉTANCHÉITÉ DU MOTEUR D ENTRETIEN STANDARD, MX210 ET MX230
02-49	KIT DE JOINT D ÉTANCHÉITÉ DU MOTEUR D ENTRETIEN STANDARD, MX255 ET MX285

TABLE DES MATIÈRES

03-01	CIRCUIT D INJECTION DE CARBURANT, MX210 ET MX230
03-02	CIRCUIT D INJECTION DE CARBURANT, MX255 ET MX285
03-03	CIRCUIT DE LA SOUPAPE DE DÉCHARGE ET DE L ANÉROÏDE, MX210 ET MX230
03-04	FILTRE DE LA POMPE DE TRANSFERT DE CARBURANT, MX210 ET MX230
03-05	POMPE DE TRANSFERT DE CARBURANT, MX255 ET MX285
03-06	FILTRE CARBURANT ET CONNEXIONS, MX255 ET MX285
03-07	POMPE ET ENTRAÎNEMENT DE L INJECTION DE CARBURANT, MX210 ET MX230
03-08	POMPE D INJECTION DE CARBURANT, MX255 ET MX285
03-09	POMPE D INJECTION DE CARBURANT, MX255 ET MX285
03-10	POMPE D INJECTION DE CARBURANT, MX255 ET MX285
03-11	POMPE D INJECTION DE CARBURANT, MX255 ET MX285
03-12	POMPE D INJECTION DE CARBURANT, MX255 ET MX285
03-13	ENGRENAGE ET SUPPORTS DE MONTAGE DE LA POMPE D INJECTION DE CARBURANT, MX255 ET MX285
03-14	INJECTEUR, MX210 ET MX230
03-15	INJECTEUR, MX255 ET MX285
03-16	MANETTE DES GAZ, MX210 ET MX230
03-17	MANETTE DES GAZ, MX255 ET MX285
03-18	PÉDALE D ACCÉLÉRATION, MX210 ET MX230
03-19	PÉDALE D ACCÉLÉRATION, MX255 ET MX285
03-20	RÉSERVOIR DE CARBURANT
03-21	CONDUITES DE CARBURANT AVEC FILTRE EN LIGNE, MX210 ET MX230
03-22	CONDUITES DE CARBURANT AVEC FILTRE SÉPARATEUR, MX210 ET MX230
03-23	CONDUITES DE CARBURANT AVEC FILTRE EN LIGNE, MX255 ET MX285
03-24	CONDUITES DE CARBURANT AVEC FILTRE SÉPARATEUR, MX255 ET MX285
03-25	FILTRE SÉPARATEUR DE CARBURANT
04-01	FAISCEAU DU MOTEUR, MX210 ET MX230
04-02	FAISCEAU DU MOTEUR, MX255 ET MX285
04-03	DISTRIBUTION DE L ALIMENTATION
04-04	CONTR LEUR DU MOTEUR, MX255 ET MX285
04-05	FAISCEAU DU CH SSIS
04-06	FAISCEAU DU DISTRIBUTEUR DE COMMANDE DISTANCE
04-07	FAISCEAU DE LA CABINE
04-08	FAISCEAU DU TOIT DE LA CABINE, DE L ÉTAGÈRE ET DU CHARGEUR DE CD
04-09	FAISCEAU DE L ESSIEU SUSPENDU
04-10	MONTAGE DES COMPOSANTS ÉLECTRIQUES
04-11	MONTAGE DES COMPOSANTS ÉLECTRIQUES - FUSIBLES
04-12	PROTECTION DU MONTANT EN A DU TABLEAU DE BORD
04-13	COMMANDES DE LA CONSOLE AVANT
04-14	COMMANDES DE LA CONSOLE DROITE
04-15	COMMANDES DE LA CONSOLE DE GARDE-BOUE DROITE, SANS ATC
04-16	COMMANDES DE LA CONSOLE DE GARDE-BOUE DROITE, AVEC ATC
04-17	MONTAGE DE L ALTERNATEUR
04-18	ALTERNATEUR - 135 A
04-19	MONTAGE DU DÉMARREUR
04-20	DÉMARREUR
04-21	SOLÉNOÏDE DU DÉMARREUR
04-22	BATTERIE, COMPARTIMENT BATTERIE ET C BLES
04-23	ESSUIE-GLACES AVANT ET ARRIÈRE
04-24	LAVE-GLACES AVANT ET ARRIÈRE
04-25	PHARES

TABLE DES MATIÈRES

04-26	PHARES AUXILIAIRES
04-27	MONITEUR ET FAISCEAU ISO 11783
04-28	FEUX DE POSITION AVANT ET PROJECTEURS DE TRAVAIL
04-29	FEUX DU TOIT DE LA CABINE
04-30	FEUX DE GARDE-BOUE ARRIÈRE ET COMMANDE D ATTELAGE DISTANCE
04-31	PROJECTEURS DE TRAVAIL DU TOIT ET DES GARDE-BOUES ARRIÈRE
04-32	GYROPHARE
04-33	RADIOS, HAUTS-PARLEURS ET ANTENNES
04-34	VOLANT ET COLONNE DE DIRECTION
04-35	COLONNE DE DIRECTION
05-01	VOLANT ET COLONNE DE DIRECTION
05-02	COLONNE DE DIRECTION
05-03	DIRECTION - PONT AVANT MOTEUR, BSN JAZ126070
05-04	DIRECTION - PONT AVANT MOTEUR, ASN JAZ126070
05-05	CIRCUIT HYDRAULIQUE - BLOCAGE DU DIFFÉRENTIEL DU PONT AVANT
05-06	CIRCUIT HYDRAULIQUE - ESSIEU SUSPENDU
05-07	DISTRIBUTEUR - ESSIEU DE PONT AVANT MOTEUR SUSPENSION
05-08	MONTAGE DE L ESSIEU AVANT, PONT AVANT
05-09	SUSPENSION DE L ESSIEU AVANT, PONT AVANT SUSPENDU
05-10	CARTER D ESSIEU DU PONT AVANT STANDARD AVEC MOYEU 10 BOULONS, SANS BLOCAGE DE DIFFÉRENTIEL
05-11	CARTER D ESSIEU DU PONT AVANT STANDARD AVEC MOYEU 10 BOULONS, AVEC BLOCAGE DE DIFFÉRENTIEL
05-12	CARTER D ESSIEU DU PONT AVANT STANDARD AVEC MOYEU 12 BOULONS, AVEC BLOCAGE DE DIFFÉRENTIEL
05-13	CARTER D ESSIEU DU PONT AVANT SUSPENDU AVEC MOYEU 10 BOULONS, SANS BLOCAGE DE DIFFÉRENTIEL
05-14	CARTER D ESSIEU DU PONT AVANT SUSPENDU AVEC MOYEU 10 BOULONS, AVEC BLOCAGE DE DIFFÉRENTIEL
05-15	CARTER D ESSIEU DU PONT AVANT SUSPENDU AVEC MOYEU 12 BOULONS, AVEC BLOCAGE DE DIFFÉRENTIEL
05-16	ARBRE D ENTRAÎNEMENT DE L ESSIEU AVANT DU PONT AVANT, SANS BLOCAGE DU DIFFÉRENTIEL
05-17	ARBRE D ENTRAÎNEMENT DE L ESSIEU AVANT DU PONT AVANT, AVEC BLOCAGE DU DIFFÉRENTIEL
05-18	DIFFÉRENTIEL ET BOÎTIER DU DIFFÉRENTIEL DU PONT AVANT, MOYEU 10 BOULONS, SANS BLOCAGE DU DIFFÉRENT
05-19	DIFFÉRENTIEL ET BOÎTIER DU DIFFÉRENTIEL DU PONT AVANT, MOYEU 10 BOULONS, AVEC BLOCAGE DU DIFFÉRENT
05-20	DIFFÉRENTIEL ET BOÎTIER DU DIFFÉRENTIEL DU PONT AVANT, MOYEU 12 BOULONS, AVEC BLOCAGE DU DIFFÉRENT
05-21	PLANÉTAIRES ET MOYEU DE L ESSIEU AVANT DU PONT AVANT - MOYEU 10 BOULONS
05-22	PLANÉTAIRES ET MOYEU DE L ESSIEU AVANT DU PONT AVANT - MOYEU 12 BOULONS
05-23	VÉRIN DE DIRECTION DU PONT AVANT, MOYEU 10 BOULONS
05-24	VÉRIN DE DIRECTION DU PONT AVANT, MOYEU 12 BOULONS
05-25	ROUES AVANT DU PONT AVANT, MOYEU 10 BOULONS
05-26	ROUES AVANT DU PONT AVANT, MOYEU 12 BOULONS
05-27	ENTRETOISE DES ROUES JUMELÉES AVANT
06-01	ARBRE D ENTRAÎNEMENT DE LA TRANSMISSION

TABLE DES MATIÈRES

06-02	BOÎTIER DE TRANSFERT DE LA TRANSMISSION
06-03	CARTER DE LA BOÎTE DE VITESSES, BSN AJB0355338
06-04	CARTER DE LA BOÎTE DE VITESSES, BTW AJB0355338 & AJB0355923
06-05	CARTER DE LA BOÎTE DE VITESSES, ASN AJB0355923
06-06	PLAQUE - MONTAGE DE DISTRIBUTEUR, C TÉ GAUCHE
06-07	PLAQUE DE MONTAGE DE LA SOUPAPE
06-08	BOÎTE DE VITESSES - ARBRE D ADMISSION SANS VITESSES LENTES
06-09	BOÎTE DE VITESSES - ARBRE D ADMISSION AVEC VITESSES LENTES
06-10	BOÎTE DE VITESSES - ARBRE INTERMÉDIAIRE SANS VITESSES LENTES
06-11	BOÎTE DE VITESSES - ARBRE INTERMÉDIAIRE AVEC VITESSES LENTES
06-12	BOÎTE DE VITESSES - ARBRE DE SORTIE, EMBRAYAGE AVANT
06-13	BOÎTE DE VITESSES - ARBRE DE SORTIE, EMBRAYAGE ARRIÈRE
06-14	CARTER DE LA BOÎTE DE GAMMES, BSN AJB0355338
06-15	CARTER DE LA BOÎTE DE GAMMES, BTW AJB0355338 & AJB0355923
06-16	CARTER DE LA BOÎTE DE GAMMES, ASN AJB0355923
06-17	SOUPAPE D APPROCHE
06-18	BOÎTE DE GAMMES - ARBRE D ADMISSION
06-19	BOÎTE DE GAMMES - EMBRAYAGE PRINCIPAL
06-20	BOÎTE DE GAMMES - ARBRE INTERMÉDIAIRE
06-21	TRANSMISSION - ARBRE DE TRANSMISSION ET ENTRAÎNEMENTS
06-22	TRANSMISSION - DIFFÉRENTIEL
06-23	BOÎTE DE GAMMES - EMBRAYAGE DE PONT AVANT
06-24	ESSIEU DE PONT AVANT - ARBRE D ENTRAÎNEMENT
06-25	EMPLACEMENT DISTRIBUTEUR DE LA TRANSMISSION
06-26	DISTRIBUTEUR DE LA TRANSMISSION (450729A2)
06-27	DISTRIBUTEUR DE LA TRANSMISSION (450721A2)
06-28	DISTRIBUTEUR DE LA TRANSMISSION (450726A2)
06-29	DISTRIBUTEUR DE LA TRANSMISSION (450728A2)
06-30	PÉDALE D APPROCHE
06-31	LEVIER DE COMMANDE DE LA TRANSMISSION
06-32	CARTER DE L"ESSIEU ARRIÈRE
06-33	RENIFLARD - TRANSMISSION
06-34	PLANÉTAIRE DE L ESSIEU ARRIÈRE, MX210, MX230 ET MX255
06-35	PLANÉTAIRE DE L ESSIEU ARRIÈRE, MX285
06-36	ESSIEU ARRIÈRE - 4 X 98 POUCES, MX210 ET MX230
06-37	ESSIEU ARRIÈRE - 4 X 98 POUCES, MX255 ET MX285
06-38	TRANSMISSION - ENTRAÎNEMENT DE LA POMPE
06-39	PRISE DE FORCE - ARBRE D ADMISSION, BSN AJB0355026
06-40	PRISE DE FORCE - ARBRE D ADMISSION, ASN AJB0355026
06-41	PRISE DE FORCE - PIGNON DE RÉDUCTION, DEUX VITESSES
06-42	PRISE DE FORCE - ARBRE DE SORTIE, DEUX VITESSES
06-43	PRISE DE FORCE - ARBRE DE SORTIE, UNE VITESSE, BSN AJB0355026
06-44	PRISE DE FORCE - ARBRE DE SORTIE, UNE VITESSE - ASN AJB0355026
06-45	PRISE DE FORCE - GARANTS
06-46	ROUES ARRIÈRE EN ACIER SOLIDE
06-47	MOYEU DES ROUES ARRIÈRE
06-48	ENTRETOISE DES ROUES JUMELÉES ARRIÈRE
06-49	MASSES D"ALOURDISSEMENT DES ROUES ARRIÈRE
07-01	FREINS - PÉDALE DE FREIN
07-02	FREINS - CIRCUIT HYDRAULIQUE, SANS FREINS DE REMORQUE
07-03	FREINS - CIRCUIT HYDRAULIQUE, FREINS DE REMORQUE HYDRAULIQUES

TABLE DES MATIÈRES

07-04	FREINS - CIRCUIT HYDRAULIQUE, FREINS DE REMORQUE PNEUMATIQUES
07-05	FREINS - DISTRIBUTEUR DE COMMANDE
07-06	FREINS - DIFFERENTIEL
07-07	FREIN DE STATIONNEMENT - LEVIER ET TRINGLERIE
07-08	FREIN DE STATIONNEMENT - CIRCUIT HYDRAULIQUE
07-09	FREIN DE STATIONNEMENT - DISTRIBUTEUR
07-10	FREIN DE STATIONNEMENT - FREIN
07-11	FREIN DE STATIONNEMENT - DESSERRAGE, BSN AJB0355923
07-12	FREIN DE STATIONNEMENT - DESSERRAGE, ASN AJB0355923
07-13	FREINS DE REMORQUE HYDRAULIQUES, SAUF ITALIE
07-14	FREINS DE REMORQUE HYDRAULIQUES, ITALIE UNIQUEMENT
07-15	FREINS DE REMORQUE PNEUMATIQUES, MONTAGE ET ENTRAÎNEMENT DU COMPRESSEUR
07-16	FREINS DE REMORQUE PNEUMATIQUES - RÉSERVOIR, SAUF ITALIE
07-17	FREINS DE REMORQUE PNEUMATIQUES -RÉSERVOIR, ITALIE UNIQUEMENT
07-18	FREINS DE REMORQUE PNEUMATIQUES - SOUPAPES
07-19	FREINS DE REMORQUE PNEUMATIQUES - COUPLEURS, SAUF ITALIE
07-20	FREINS DE REMORQUE PNEUMATIQUES -COUPLEURS, ITALIE UNIQUEMENT
08-01	CIRCUIT HYDRAULIQUE - REFROIDISSEUR D HUILE
08-02	CIRCUIT HYDRAULIQUE - 3ÈME REFROIDISSEUR D HUILE
08-03	CIRCUIT HYDRAULIQUE - POMPE DE CHARGE
08-04	CIRCUIT HYDRAULIQUE - POMPE PISTON ET FILTRE, DÉBIT STANDARD
08-05	CIRCUIT HYDRAULIQUE - POMPE PISTON ET FILTRE, DÉBIT ÉLEVÉ
08-06	CIRCUIT HYDRAULIQUE - PRESSION RÉGULÉE
08-07	CIRCUIT HYDRAULIQUE - VITESSES LENTES
08-08	CIRCUIT HYDRAULIQUE - GRAISSAGE DE LA TRANSMISSION
08-09	CIRCUIT HYDRAULIQUE - ATTELAGE
08-10	
08-11	CIRCUIT HYDRAULIQUE - ATTELAGE
08-12	CIRCUIT HYDRAULIQUE - VALVE DE BLOCAGE DU DIFFÉRENTIEL/DE LA PDF
08-13	CIRCUIT HYDRAULIQUE - COUPLEURS DISTANCE
08-14	CIRCUIT HYDRAULIQUE - PUISSANCE DE RÉSERVE
08-15	CIRCUIT HYDRAULIQUE - RETOUR DU MOTEUR
08-16	SOUPAPE DE PRIORITÉ ET RÉGULATEUR
08-17	DISTRIBUTEUR DE LA PDF ET DU BLOCAGE DU DIFFÉRENTIEL
08-18	DISTRIBUTEURS DE COMMANDE HYDRAULIQUES DISTANCE
08-19	CLAPET DU COLLECTEUR
08-20	DISTRIBUTEUR HYDRAULIQUE DE COMMANDE DISTANCE
08-21	DISTRIBUTEUR D ATTELAGE
08-22	MONTAGE DU COUPLEUR HYDRAULIQUE DISTANCE
08-23	COUPLEURS HYDRAULIQUES DISTANCE
08-24	VÉRIN D ATTELAGE (305022A2)
08-25	VÉRIN D ATTELAGE (278277A3)
08-26	VÉRIN D ATTELAGE (278419A3)
08-27	DISTRIBUTEUR DE RÉSERVE DE PUISSANCE
09-01	CADRE AVANT
09-02	CHAPE DE REMORQUAGE AVANT
09-03	MASSES AVANT
09-04	MASSES AVANT
09-05	ATTELAGE AVANT
09-06	GARDE-BOUE AVANT, ÉTROITS

TABLE DES MATIÈRES

09-07	GARDE-BOUE AVANT, LARGES
09-08	GARDE-BOUE ARRIÈRE
09-09	GARDE-BOUE ARRIÈRE, EXTRA LARGES
09-10	INCLINAISON DU CAPOT
09-11	GARANTS DU VENTILATEUR
09-12	CAPOT FIXÉ
09-13	CABINE - MONTANTS ET CH SSIS, BSN AJB0355923
09-14	CABINE - MONTANTS ET CH SSIS, ASN AJB0355923
09-15	CABINE - TOIT
09-16	CABINE - GARNISSAGE EXTÉRIEUR
09-17	CABINE - MARCHEPIED
09-18	CABINE - MARCHE D ACCÈS AU PARE-BRISE
09-19	CABINE - PORTIÈRE
09-20	CABINE - VITRE ARRIÈRE
09-21	CABINE - VITRE FIXE
09-22	RÉTROVISEURS
09-23	CABINE - GARNITURE STANDARD
09-24	CABINE - GARNITURE DELUXE ET LUXURY
09-25	CABINE - TAPIS DE SOL ET ISOLATION
09-26	CABINE - GARNITURE DES GARDE-BOUE
09-27	CABINE - GARNITURE DU MONTANT DE LA CABINE
09-28	CABINE - TABLEAU DE BORD
09-29	SIÈGE
09-30	SIÈGE - COUSSIN
09-31	SIÈGE - SUSPENSION
09-32	SIÈGE - SUSPENSION SEMI-ACTIVE
09-33	SIÈGE - FORMATION
09-34	CONSOLE DROITE, CABINE STANDARD
09-35	CONSOLE DROITE, CABINES DELUXE ET LUXURY
09-36	MONTAGE DU MONITEUR - TOIT DE LA CABINE
09-37	MONTAGE DU MONITEUR - MONTANT EN A DE LA CABINE
09-38	CLIMATISATION - MONTAGE DU COMPRESSEUR
09-39	CLIMATISATION - CONDENSEUR
09-40	SYSTÈME DE CHAUFFAGE
09-41	CLIMATISATION CONTR LEUR DE CLIMATISATION, SANS CONTR LE AUTOMATIQUE DE LA TEMPÉRATURE
09-42	CLIMATISATION CONTR LEUR DE CLIMATISATION, AVEC CONTR LE AUTOMATIQUE DE LA TEMPÉRATURE
09-43	CLIMATISATION - FILTRE AIR
09-44	CLIMATISATION - CONDUITES
09-45	CABINE - ISOLATION
09-46	BARRE D ATTELAGE ET CHAPE VERROUILLAGE AUTOMATIQUE
09-47	BARRE D ATTELAGE ET CHAPE VERROUILLAGE AUTOMATIQUE - ITALIE UNIQUEMENT
09-48	ATTELAGE - SUPPORTS ET ARBRE OSCILLANT
09-49	ATTELAGE - BARRE DE POUSSÉE
09-50	ATTELAGE - BIELLES DE RELEVAGE
09-51	ATTELAGE - BARRES DE TRACTION
09-52	ATTELAGE - LIMITEUR DE DÉBATTEMENT
09-53	ATTELAGE - CAPTEUR DE POSITION
09-54	ATTELAGE - BROCHES DE COMMANDE DE TRACTION

TABLE DES MATIÈRES

09-55	ATTELAGE DE LA REMORQUE - BROCHE MANUELLE, FRANCE UNIQUEMENT (CRAMER)
09-56	ATTELAGE DE LA REMORQUE - BROCHE MANUELLE, FRANCE UNIQUEMENT (CBM)
09-57	ATTELAGE DE LA REMORQUE - CHAPE AUTOMATIQUE, ALLEMAGNE UNIQUEMENT (CRAMER)
09-58	ATTELAGE DE LA REMORQUE - CHAPE AUTOMATIQUE, 37 MM, ALLEMAGNE UNIQUEMENT (CRAMER)
09-59	ATTELAGE DE LA REMORQUE - CHAPE AUTOMATIQUE, 32 MM, ALLEMAGNE UNIQUEMENT (CRAMER)
09-60	ATTELAGE DE LA REMORQUE - CHAPE AUTOMATIQUE, 38 MM, ALLEMAGNE UNIQUEMENT (CBM)
09-61	ATTELAGE DE LA REMORQUE - BROCHE MANUELLE, ITALIE UNIQUEMENT (CBM)
09-62	ADHÉSIFS
09-63	ADHÉSIFS -STEYR
09-64	ADHÉSIFS

INHALTSVERZEICHNIS

02-01	KÜHLER- UND LÜFTERVERKLEIDUNG
02-02	KÜHLER
02-03	AUSGLEICHSSYSTEM
02-04	LUFTANSAUGSYSTEM - STANDARDBETRIEB
02-05	LUFTANSAUGSYSTEM - EXTREMBETRIEB
02-06	LADELUFTKÜHLER
02-07	ÄTHERSTARTHILFE-SYSTEM
02-08	ABGASSYSTEM
02-09	MOTORBEFESTIGUNG
02-10	SCHWUNGRADABDECKUNG
02-11	WASSERPUMPENSYSTEM DER SERIEN MX210 UND MX230
02-12	WASSERPUMPENSYSTEM DER SERIEN MX255 UND MX285
02-13	FRONTGETRIEBEABDECKUNG DER SERIEN MX210 UND MX230
02-14	FRONTGETRIEBEABDECKUNG DER SERIEN MX255 UND MX285
02-15	VERTEILER DER SERIEN MX210 UND MX230
02-16	VERTEILER DER SERIEN MX255 UND MX285
02-17	TURBOLADERSYSTEM DER SERIEN MX210 UND MX230
02-18	TURBOLADERSYSTEM DER SERIEN MX255 UND MX285
02-19	TURBOLADER DER SERIEN MX210 UND MX230
02-20	TURBOLADER DER SERIEN MX255 UND MX285
02-21	STELLVORRICHTUNG LADEDRUCK-REGELVENTIL DER SERIEN MX210 UND MX230
02-22	STELLVORRICHTUNG LADEDRUCK-REGELVENTIL DER SERIEN MX255 UND MX285
02-23	ÖLFILTER UND ÖLKÜHLER DER SERIEN MX210 UND MX230
02-24	ÖLFILTER UND ÖLKÜHLER DER SERIEN MX255 UND MX285
02-25	ÖLPUMPE UND ÖLWANNE
02-26	ZYLINDERKOPFABDECKUNG DER SERIEN MX210 UND MX230, BSN JAZ132841
02-27	ZYLINDERKOPFABDECKUNG DER SERIEN MX210 UND MX230, ASN JAZ132841
02-28	ZYLINDERKOPFABDECKUNG DER SERIEN MX255 UND MX285
02-29	ZYLINDERKOPF-VENTILMECHANISMUS DER SERIEN MX210 UND MX230
02-30	ZYLINDERKOPF-VENTILMECHANISMUS DER SERIEN MX255 UND MX285
02-31	THERMOSTAT - FILTER, WASSER
02-32	KURBELGEHÄUSE, ENTLÜFTER MX210 UND MX230, BSN JAZ132841
02-33	KURBELGEHÄUSE, ENTLÜFTER MX255 UND MX285
02-34	NOCKENWELLE DER SERIEN MX210 UND MX230
02-35	NOCKENWELLE DER SERIEN MX255 UND MX285
02-36	ZYLINDERBLOCK DER SERIEN MX210 UND MX230
02-37	ZYLINDERBLOCK DER SERIEN MX255 UND MX285
02-38	MOTOR-ÜBERHOLKIT DER SERIEN MX210 UND MX230
02-39	MOTOR-ÜBERHOLKIT DER SERIEN MX255 UND MX285
02-40	KURBELWELLE
02-41	SCHWUNGRAD
02-42	KOLBEN - PLEUEL DER SERIEN MX210 UND MX230
02-43	KOLBEN - PLEUEL DER SERIEN MX255 UND MX285
02-44	DICHTUNGSKIT - VENTILSCHLIFF DER SERIEN MX210 UND MX230
02-45	DICHTUNGSKIT - VENTILSCHLIFF DER SERIEN MX255 UND MX285
02-46	DICHTUNGSKIT - ZYLINDERBLOCK DER SERIEN MX210 UND MX230
02-47	DICHTUNGSKIT - ZYLINDERBLOCK DER SERIEN MX255 UND MX285
02-48	DICHTUNGSKIT - STANDARD-MOTORWARTUNG DER SERIEN MX210 UND MX230
02-49	DICHTUNGSKIT - STANDARD-MOTORWARTUNG DER SERIEN MX255 UND MX285
03-01	KRAFTSTOFF-EINSPRITZSYSTEM DER SERIEN MX210 UND MX230
03-02	KRAFTSTOFF-EINSPRITZSYSTEM DER SERIEN MX255 UND MX285

INHALTSVERZEICHNIS

03-03	ANEROID- UND LADEDRUCK-REGELVENTILSYSTEM DER SERIEN MX210 UND MX230
03-04	KRAFTSTOFFFILTER FÜR TRANSFERPUMPE DER SERIEN MX210 UND MX230
03-05	KRAFTSTOFF-TRANSFERPUMPE DER SERIEN MX255 UND MX285
03-06	KRAFTSTOFFFILTER UND ANSCHLÜSSE DER SERIEN MX255 UND MX285
03-07	KRAFTSTOFF-EINSPRITZPUMPE UND PUMPENANTRIEB DER SERIEN MX210 UND MX230
03-08	KRAFTSTOFF-EINSPRITZPUMPE DER SERIEN MX255 UND MX285
03-09	KRAFTSTOFF-EINSPRITZPUMPE DER SERIEN MX255 UND MX285
03-10	KRAFTSTOFF-EINSPRITZPUMPE DER SERIEN MX255 UND MX285
03-11	KRAFTSTOFF-EINSPRITZPUMPE DER SERIEN MX255 UND MX285
03-12	KRAFTSTOFF-EINSPRITZPUMPE DER SERIEN MX255 UND MX285
03-13	ZAHNRAD UND MONTAGEHALTERRUNGEN FÜR KRAFTSTOFF-EINSPRITZPUMPE DER SERIEN MX255 UND MX285
03-14	KRAFTSTOFF-EINSPRITZDÜSE DER SERIEN MX210 UND MX230
03-15	KRAFTSTOFF-EINSPRITZDÜSE DER SERIEN MX255 UND MX285
03-16	GASHEBEL DER SERIEN MX210 UND MX230
03-17	GASHEBEL DER SERIEN MX255 UND MX285
03-18	GASPEDAL DER SERIEN MX210 UND MX230
03-19	GASPEDAL DER SERIEN MX255 UND MX285
03-20	KRAFTSTOFFTANKS
03-21	KRAFTSTOFFLEITUNGEN MIT INLINE-FILTER, MX210 UND MX230
03-22	KRAFTSTOFFLEITUNGEN MIT ABSCHEIDERFILTER, MX210 UND MX230
03-23	KRAFTSTOFFLEITUNGEN MIT INLINE-FILTER, MX255 UND MX285
03-24	KRAFTSTOFFLEITUNGEN MIT ABSCHEIDERFILTER, MX255 UND MX285
03-25	KRAFTSTOFFABSCHEIDERFILTER
04-01	MOTOR-KABELBAUM DER SERIEN MX210 UND MX230
04-02	MOTORKABELBAUM DER SERIEN MX255 UND MX285
04-03	LEISTUNGSVERTEILUNG
04-04	MOTOR-STEUERMODUL DER SERIEN MX255 UND MX285
04-05	RAHMENKABELBAUM
04-06	KABELBAUM - HYDRAULIKVENTIL
04-07	KABINENKABELBAUM
04-08	KABELBAUM FÜR KABINENDACH, ÜBERKOPFKONSOLE UND CD-WECHSLER
04-09	KABELBAUM FÜR GEFEDERTE ACHSE
04-10	BEFESTIGUNG FÜR ELEKTROKOMPONENTEN
04-11	BEFESTIGUNG FÜR ELEKTROKOMPONENTEN SICHERUNGEN
04-12	HAUPTRAHMENABDECKUNG ARMATURENBRETT
04-13	BEDIENELEMENTE - VORDERE BEDIENKONSOLE
04-14	BEDIENELEMENTE - RECHTE BEDIENKONSOLE
04-15	BEDIENELEMENTE RECHTE KOTFLÜGEL-BEDIENKONSOLE OHNE AUTOMATISCHE TEMPERRATURREGELUNG
04-16	BEDIENELEMENTE RECHTE KOTFLÜGEL-BEDIENKONSOLE MIT AUTOMATISCHER TEMPERRATURREGELUNG
04-17	LICHTMASCHINENBEFESTIGUNG
04-18	LICHTMASCHINE - 135 A
04-19	ANLASSERBEFESTIGUNG
04-20	ANLASSER
04-21	ANLASSER-MAGNETSCHALTER
04-22	BATTERIE, BATTERIEKASTEN UND KABEL
04-23	SCHEIBENWISCHER VORN UND HINTEN

INHALTSVERZEICHNIS

04-24	SCHEIBENWASCHANLAGE VORN UND HINTEN
04-25	SCHEINWERFER
04-26	ZUSATZSCHEINWERFER
04-27	ISO 11783 KABELBAUM UND ANZEIGE
04-28	LEUCHTEN - VORDERE POSITIONSLEUCHTEN UND ARBEITSSCHEINWERFER
04-29	KABINENDACHLEUCHTEN
04-30	LEUCHTEN - HINTERER KOTFLÜGEL UND EXTERNE LAGEREGELUNG FÜR EHR
04-31	ARBEITSSCHEINWERFER - KABINENDACH UND HINTERE KOTFLÜGEL
04-32	RUNDUMLEUCHTE
04-33	RADIOS, LAUTSPRECHER UND ANTENNEN
04-34	LENKRAD UND LENKSÄULE
04-35	LENKSÄULE
05-01	LENKRAD UND LENKSÄULE
05-02	LENKSÄULE
05-03	LENKANLAGE - ALLRADANTRIEB, BSN JAZ126070
05-04	LENKANLAGE - ALLRADANTRIEB, ASN JAZ126070
05-05	HYDRAULIKANLAGE - ALLRADANTRIEBS-DIFFERENTIALSPERRE
05-06	HYDRAULIKANLAGE FÜR GEFEDERTE ACHSE
05-07	VENTILEINHEIT - ALLRADANTRIEB-PENDELACHSE
05-08	VORDERACHSBEFESTIGUNG FÜR ALLRADANTRIEB
05-09	VORDERACHSFEDERUNG - GEFEDERTER ALLRADANTRIEB
05-10	ALLRADANTRIEBS-ACHSGEHÄUSE - STANDARD MIT 10 NABENSCHRAUBEN OHNE DIFFERENTIALSPERRE
05-11	ALLRADANTRIEBS-ACHSGEHÄUSE - STANDARD MIT 10 NABENSCHRAUBEN MIT DIFFERENTIALSPERRE
05-12	ALLRADANTRIEBS-ACHSGEHÄUSE - STANDARD MIT 12 NABENSCHRAUBEN MIT DIFFERENTIALSPERRE
05-13	ALLRADANTRIEBS-ACHSGEHÄUSE - GEFEDERT MIT 10 NABENSCHRAUBEN OHNE DIFFERENTIALSPERRE
05-14	ALLRADANTRIEBS-ACHSGEHÄUSE - GEFEDERT MIT 10 NABENSCHRAUBEN MIT DIFFERENTIALSPERRE
05-15	ALLRADANTRIEBS-ACHSGEHÄUSE - GEFEDERT MIT 12 NABENSCHRAUBEN MIT DIFFERENTIALSPERRE
05-16	VORDERACHSEN-ANTRIEBSWELLE - ALLRADANTRIEB, OHNE DIFFERENTIALSPERRE
05-17	VORDERACHSEN-ANTRIEBSWELLE - ALLRADANTRIEB, MIT DIFFERENTIALSPERRE
05-18	TRÄGER UND DIFFERENTIAL - ALLRADANTRIEB MIT 10 NABENSCHRAUBEN OHNE DIFFERENTIALSPERRE
05-19	TRÄGER UND DIFFERENTIAL - ALLRADANTRIEB MIT 10 NABENSCHRAUBEN MIT DIFFERENTIALSPERRE
05-20	TRÄGER UND DIFFERENTIAL - ALLRADANTRIEB MIT 12 NABENSCHRAUBEN MIT DIFFERENTIALSPERRE
05-21	VORDERACHSEN-PLANETENGETRIEBE UND -NABE - ALLRADANTRIEB, 10 NABENSCHRAUBEN
05-22	VORDERACHSEN-PLANETENGETRIEBE UND -NABE - ALLRADANTRIEB, 12 NABENSCHRAUBEN
05-23	LENKZYLINDER - ALLRADANTRIEB, 10 NABENSCHRAUBEN
05-24	LENKZYLINDER - ALLRADANTRIEB, 12 NABENSCHRAUBEN
05-25	VORDERRÄDER - ALLRADANTRIEB, 10 NABENSCHRAUBEN
05-26	VORDERRÄDER - ALLRADANTRIEB, 12 NABENSCHRAUBEN
05-27	DISTANZSTÜCK - VORDERE ZWILLINGSRÄDER

INHALTSVERZEICHNIS

06-01	GETRIEBE-ANTRIEBSWELLE
06-02	GETRIEBEGEHÄUSE
06-03	WECHSELGETRIEBE-GEHÄUSE, BSN AJB0355338
06-04	WECHSELGETRIEBE-GEHÄUSE, BTW AJB0355338 & AJB0355923
06-05	WECHSELGETRIEBE-GEHÄUSE, ASN AJB0355923
06-06	VENTILBEFESTIGUNGSPLATTEN, LINKS
06-07	VENTILBEFESTIGUNGSPLATTEN
06-08	WECHSELGETRIEBE - EINGANGSWELLE OHNE LANGSAMGRUPPE
06-09	WECHSELGETRIEBE - EINGANGSWELLE MIT LANGSAMGRUPPE
06-10	WECHSELGETRIEBE - VORGELEGEWELLE OHNE LANGSAMGRUPPE
06-11	WECHSELGETRIEBE - VORGELEGEWELLE MIT LANGSAMGRUPPE
06-12	WECHSELGETRIEBE - VORDERE KUPPLUNG DER AUSGANGSWELLE
06-13	WECHSELGETRIEBE - HINTERE KUPPLUNG DER AUSGANGSWELLE
06-14	GRUPPENGETRIEBEGEHÄUSE, BSN AJB0355338
06-15	GRUPPENGETRIEBEGEHÄUSE, BTW AJB0355338 & AJB0355923
06-16	GRUPPENGETRIEBEGEHÄUSE, ASN AJB0355923
06-17	SCHRITTFAHRVENTIL
06-18	EINGANGSWELLE FÜR GRUPPENGETRIEBE
06-19	HAUPTKUPPLUNG GRUPPENGETRIEBE
06-20	VORGELEGEWELLE GRUPPENGETRIEBE
06-21	GETRIEBE-RITZELWELLE UND ZAHNRÄDER
06-22	TRANSMISSION - DIFFÉRENTIEL
06-23	ALLRADKUPPLUNG FÜR GRUPPENGETRIEBE
06-24	ALLRADANTRIEBSACHSEN-ANTRIEBSWELLE
06-25	ANORDNUNG DES GETRIEBE-STEUERVENTILS
06-26	GETRIEBE-STEUERVENTIL (450729A2)
06-27	GETRIEBE-STEUERVENTIL (450721A2)
06-28	GETRIEBE-STEUERVENTIL (450726A2)
06-29	GETRIEBE-STEUERVENTIL (450728A2)
06-30	SCHRITTFAHRPEDAL
06-31	SCHALTHEBEL
06-32	HINTERES ACHSGEHÄUSE
06-33	GETRIEBEENTLÜFTER
06-34	HINTERACHSEN-PLANETENGETRIEBE DER SERIEN MX210, MX230 UND MX255
06-35	HINTERACHSEN-PLANETENGETRIEBE DER SERIE MX285
06-36	4 X 98 IN.-HINTERACHSE DER SERIEN MX210 UND MX230
06-37	4 X 98 IN.-HINTERACHSE DER SERIEN MX255 UND MX285
06-38	GETRIEBEPUMPENANTRIEB
06-39	ZAPFWELLEN-EINGANGSWELLE, BSN AJB0355026
06-40	ZAPFWELLEN-EINGANGSWELLE, ASN AJB0355026
06-41	ZAPFWELLE - REDUKTIONSGETRIEBE MIT ZWEISTUFIGER DREHZAHL
06-42	ZAPFWELLE - AUSGANGSWELLE MIT ZWEISTUFIGER DREHZAHL
06-43	ZAPFWELLE - AUSGANGSWELLE MIT EINSTUFIGER DREHZAHL, BSN AJB0355026
06-44	ZAPFWELLE - AUSGANGSWELLE MIT EINSTUFIGER DREHZAHL - ASN AJB0355026
06-45	ZAPFWELLENABDECKUNGEN
06-46	STAHL-HINTERRÄDER
06-47	HINTERRADNABE
06-48	DISTANZSTÜCK - HINTERE ZWILLINGSRÄDER
06-49	HINTERRADGEWICHTE
07-01	BREMSEN - PEDALBREMSE
07-02	BREMSEN - HYDRAULIKANLAGE, OHNE ANHÄNGERBREMSEN

INHALTSVERZEICHNIS

07-03	BREMSEN - HYDRAULIKANLAGE, MIT HYDRAULISCHEN ANHÄNGERBREMSEN
07-04	BREMSEN - HYDRAULIKANLAGE, MIT PNEUMATISCHEN ANHÄNGERBREMSEN
07-05	BREMSEN - STEUERVENTIL
07-06	BREMSEN - DIFFERENTIALGETRIEBE
07-07	FESTSTELL- UND NOTBREMSE - HEBEL UND GESTÄNGE
07-08	FESTSTELL- UND NOTBREMSE - HYDRAULIKANLAGE
07-09	FESTSTELLBREMS- UND NOTBREMSVENTIL
07-10	FESTSTELL- UND NOTBREMSE
07-11	FESTSTELLBREMSEN-ENTRIEGELUNG, BSN AJB0355923
07-12	FESTSTELLBREMSEN-ENTRIEGELUNG, ASN AJB0355923
07-13	HYDRAULISCHE ANHÄNGERBREMSEN (AUSSER ITALIEN)
07-14	HYDRAULISCHE ANHÄNGERBREMSEN (NUR ITALIEN)
07-15	ANHÄNGERBREMSEN - PNEUMATISCH, LUFTKOMPRESSORBEFESTIGUNG UND ANTRIEB
07-16	ANHÄNGERBREMSEN - PNEUMATISCH, BEHÄLTER (AUSSER ITALIEN)
07-17	ANHÄNGERBREMSEN - PNEUMATISCH, BEHÄLTER (NUR ITALIEN)
07-18	ANHÄNGERBREMSEN - PNEUMATISCH, VENTILE
07-19	ANHÄNGERBREMSEN - PNEUMATISCH, KUPPLUNGEN (AUSSER ITALIEN)
07-20	ANHÄNGERBREMSEN - PNEUMATISCH, KUPPLUNGEN (NUR ITALIEN)
08-01	HYDRAULIKANLAGE - ÖLKÜHLER
08-02	HYDRAULIKANLAGE - 3. ÖLKÜHLER
08-03	HYDRAULIKANLAGE - SPEISEPUMPE
08-04	HYDRAULIKANLAGE - KOLBENPUMPE UND FILTER, STANDARD-DURCHFLUSSMENGE
08-05	HYDRAULIKANLAGE - KOLBENPUMPE UND FILTER, HOCHLEISTUNGS-DURCHFLUSSMENGE
08-06	HYDRAULIKANLAGE - P1-DRUCK
08-07	HYDRAULIKANLAGE - LANGSAMGRUPPE
08-08	HYDRAULIKANLAGE - GETRIEBESCHMIERUNG
08-09	HYDRAULIKANLAGE - KRAFTHEBER
08-10	
08-11	HYDRAULIKANLAGE - FRONTKRAFTHEBER
08-12	HYDRAULIKANLAGE - ZAPFWELLEN-/DIFFERENTIALSPERRENVENTIL
08-13	HYDRAULIKANLAGE - ZUSATZSTEUERGERÄTE-KUPPLUNGEN
08-14	HYDRAULIKANLAGE - EXTERNE VERBRAUCHER
08-15	HYDRAULIKANLAGE - MOTOR-RÜCKLAUF
08-16	PRIORITÄTS- UND STROMREGELVENTIL
08-17	ZAPFWELLEN- UND DIFFERENTIALSPERRENVENTIL
08-18	HYDRAULISCHES ZUSATZSTEUERGERÄT
08-19	VENTILBLOCK
08-20	HYDRAULISCHES ZUSATZSTEUERGERÄTE-VENTIL
08-21	ZUSAMMENBAU DES KRAFTHEBER-STEUERGERÄTS
08-22	BEFESTIGUNG FÜR ZUSATZSTEUERGERÄTE-KUPPLUNG
08-23	ZUSATZSTEUERGERÄTE-HYDRAULIKKUPPLUNGEN
08-24	KRAFTHEBERZYLINDER (305022A2)
08-25	KRAFTHEBERZYLINDER (278277A3)
08-26	KRAFTHEBERZYLINDER (278419A3)
08-27	VENTIL FÜR EXTERNE VERBRAUCHER
09-01	FRONTRAHMEN
09-02	VORDERE ZUGGABEL
09-03	FRONTGEWICHTE

INHALTSVERZEICHNIS

09-04	FRONTGEWICHTE
09-05	FRONTKRAFTHEBER
09-06	VORDERE KOTFLÜGEL, SCHMAL
09-07	VORDERE KOTFLÜGEL, BREIT
09-08	HINTERE KOTFLÜGEL
09-09	VORDERE KOTFLÜGEL, EXTRABREIT
09-10	SCHWENKBARE MOTORHAUBE
09-11	GEBLÄSEABDECKUNGEN
09-12	FIXIERTE MOTORHAUBE
09-13	KABINENBEFESTIGUNG UND -RAHMEN, BSN AJB0355923
09-14	KABINENBEFESTIGUNG UND -RAHMEN, ASN AJB0355923
09-15	KABINENDACH
09-16	KABINEN-AUSSENVERKLEIDUNG
09-17	KABINENSTUFEN
09-18	KABINENSTUFE FÜR WINDSCHUTZSCHEIBE
09-19	KABINENTÜR
09-20	HINTERES KABINENFENSTER
09-21	FIXIERTES KABINENFENSTERGLAS
09-22	SPIEGEL
09-23	STANDARDLEISTE FÜR KABINEN-ÜBERKOPFKONSOLE
09-24	DELUXE- UND LUXUSLEISTE FÜR KABINEN-ÜBERKOPFKONSOLE
09-25	KABINEN-BODENMATTE UND ISOLIERUNG
09-26	KABINENLEISTE, -KOTFLÜGEL
09-27	KABINENLEISTE, -RAHMEN
09-28	KABINEN-ARMATURENBRETT
09-29	SITZ
09-30	SITZKISSEN
09-31	SITZFEDERUNG
09-32	HALBAUTOMATISCHE SITZFEDERUNG
09-33	AUSBILDUNGSSITZ
09-34	RECHTE BEDIENKONSOLE DER STANDARDKABINE
09-35	RECHTE BEDIENKONSOLE DER DELUXE- UND LUXUSKABINE
09-36	MONITORHALTERUNG FÜR KABINENDACH
09-37	MONITORHALTERUNG FÜR KABINEN-HAUPTRAHMEN
09-38	KLIMAANLAGEN-KOMPRESSORHALTERUNG
09-39	KONDENSATOR DER KLIMAANLAGE
09-40	HEIZUNGSANLAGE
09-41	KLIMAANLAGE - CCM OHNE AUTOMATISCHE TEMPERATURREGELUNG
09-42	KLIMAANLAGE - CCM MIT AUTOMATISCHER TEMPERATURREGELUNG
09-43	KLIMAANLAGEN-LUFTFILTER
09-44	KLIMAANLAGENLEITUNGEN
09-45	KABINENISOLIERUNG
09-46	ZUGPENDEL UND HAKENFEDER
09-47	ZUGPENDEL UND HAKENFEDER (NUR ITALIEN)
09-48	KRAFTHEBER-HUBWELLENHALTERUNG UND -HUBWELLE
09-49	KRAFTHEBER-OBERLENKER
09-50	KRAFTHEBER-HUBSTANGEN
09-51	UNTERLENKER DES KRAFTHEBERS
09-52	KRAFTHEBER - STABILISATOREN FÜR UNTERLENKER
09-53	LAGEREGELSENSOR
09-54	KRAFTHEBER-ZUGKRAFTREGELUNGSBOLZEN

INHALTSVERZEICHNIS

09-55	ANHÄNGERKUPPLUNG - HANDBOLZEN, NUR FRANKREICH (CRAMER)
09-56	ANHÄNGERKUPPLUNG - HANDBOLZEN, NUR FRANKREICH (CBM)
09-57	ANHÄNGERKUPPLUNG - AUTOMATISCHE GABEL, NUR DEUTSCHLAND (CRAMER)
09-58	ANHÄNGERKUPPLUNG - 37 MM-AUTOMATISCHE GABEL, NUR DEUTSCHLAND (CRAMER)
09-59	ANHÄNGERKUPPLUNG - 32 MM-AUTOMATISCHE GABEL, NUR DEUTSCHLAND (CRAMER)
09-60	ANHÄNGERKUPPLUNG - 38 MM-AUTOMATISCHE GABEL, NUR DEUTSCHLAND (CBM)
09-61	ANHÄNGERKUPPLUNG - HANDBOLZEN, NUR ITALIEN (CBM)
09-62	AUFKLEBER
09-63	AUFKLEBER FÜR STEYR
09-64	AUFKLEBER

CONTENIDO

02-01	PROTECTOR DEL VENTILADOR Y RADIADOR
02-02	CONJUNTO DEL RADIADOR
02-03	SISTEMA DE DESAIREACIÓN
02-04	SISTEMA DE INDUCCIÓN DE AIRE - PARA SERVICIO ESTÁNDAR
02-05	SISTEMA DE INDUCCIÓN DE AIRE - PARA SERVICIO PESADO
02-06	POSTREFRIGERADOR
02-07	SISTEMA DE ARRANQUE POR ÉTER
02-08	SISTEMA DE ESCAPE
02-09	MONTAJE DEL MOTOR
02-10	PROTECTORES DEL VOLANTE
02-11	SISTEMA DE LA BOMBA DE AGUA, MX210 Y MX230
02-12	SISTEMA DE LA BOMBA DE AGUA, MX255 Y MX285
02-13	CUBIERTA DEL ENGRANAJE DELANTERO, MX210 Y MX230
02-14	CUBIERTA DEL ENGRANAJE DELANTERO, MX255 Y MX285
02-15	BLOQUES DE DISTRIBUCIÓN, MX210 Y MX230
02-16	BLOQUES DE DISTRIBUCIÓN, MX255 Y MX285
02-17	SISTEMA DEL TURBOCARGADOR, MX210 Y MX230
02-18	SISTEMA DEL TURBOCARGADOR, MX255 Y MX285
02-19	CONJUNTO DEL TURBOCARGADOR, MX210 Y MX230
02-20	CONJUNTO DEL TURBOCARGADOR, MX255 Y MX285
02-21	ACCIONADOR DE DESCARGA , MX210 Y MX230
02-22	ACCIONADOR DE DESCARGA , MX255 Y MX285
02-23	FILTRO Y REFRIGERADOR- ACEITE, MX210 Y MX230
02-24	FILTRO Y REFRIGERADOR- ACEITE, MX255 Y MX285
02-25	BANDEJA Y BOMBA DE ACEITE
02-26	CULATA DEL CILINDRO - CUBIERTA, MX210 Y MX230, BSN JAZ132841
02-27	CULATA DEL CILINDRO - CUBIERTA, MX210 Y MX230, ASN JAZ132841
02-28	CULATA DEL CILINDRO - CUBIERTA, MX255 Y MX285
02-29	CABEÇA DO CILINDRO - MECANISMO DAS VÁLVULAS, MODELOS MX210 E MX230
02-30	CULATA DEL CILINDRO - MECANISMO DE LA VÁLVULA, MX255 Y MX285
02-31	TERMOSTATO FILTRO, AGUA
02-32	CARTER, RESPIRADERO, MX210 Y MX230, BSN JAZ132841
02-33	CARTER, RESPIRADERO, MX255 Y MX285
02-34	EJE DE LEVAS, MX210 Y MX230
02-35	EJE DE LEVAS, MX255 Y MX285
02-36	BLOQUE DE CILINDRO, MX210 Y MX230
02-37	BLOQUE DE CILINDRO, MX255 Y MX285
02-38	JUEGO DE REVISIÓN DEL MOTOR, MX210 Y MX230
02-39	JUEGO DE REVISIÓN DEL MOTOR, MX255 Y MX285
02-40	CIGÜEÑAL
02-41	VOLANTE
02-42	PISTONES - BIELAS, MX210 Y MX230
02-43	PISTONES - BIELAS, MX255 Y MX285
02-44	JUEGO DE JUNTAS - VÁLVULA RECTIFICADORA, MX210 Y MX230
02-45	JUEGO DE JUNTAS - VÁLVULA RECTIFICADORA, MX255 Y MX285
02-46	JUEGO DE JUNTAS - BLOQUE DE CILINDRO, MX210 Y MX230
02-47	JUEGO DE JUNTAS - BLOQUE DE CILINDRO, MX255 Y MX285
02-48	JUEGO DE JUNTAS - MANTENIMIENTO BÁSICO DEL MOTOR, MX210 Y MX230
02-49	JUEGO DE JUNTAS - MANTENIMIENTO BÁSICO DEL MOTOR, MX255 Y MX285
03-01	SISTEMA DE INYECCIÓN DEL COMBUSTIBLE, MX210 Y MX230
03-02	SISTEMA DE INYECCIÓN DEL COMBUSTIBLE, MX255 Y MX285

CONTENIDO

03-03	SISTEMA DE DESCARGA Y ANEROIDE , MX210 Y MX230
03-04	FILTRO DE COMBUSTIBLE - BOMBA, TRANSFERENCIA, MX210 Y MX230
03-05	BOMBA, TRANSFERENCIA DE COMBUSTIBLE, MX255 Y MX285
03-06	FILTRO DE COMBUSTIBLE Y CONEXIONES, MX255 Y MX285
03-07	INYECCIÓN DE COMBUSTIBLE - BOMBA Y TRANSMISIÓN, MX210 Y MX230
03-08	BOMBA DE INYECCIÓN DE COMBUSTIBLE, MX255 Y MX285
03-09	BOMBA DE INYECCIÓN DE COMBUSTIBLE, MX255 Y MX285
03-10	BOMBA DE INYECCIÓN DE COMBUSTIBLE, MX255 Y MX285
03-11	BOMBA DE INYECCIÓN DE COMBUSTIBLE, MX255 Y MX285
03-12	BOMBA DE INYECCIÓN DE COMBUSTIBLE, MX255 Y MX285
03-13	BOMBA DE INYECCIÓN DE COMBUSTIBLE - SOPORTES DE MONTAJE Y ENGRANAJE, MX255 Y MX285
03-14	INYECCIÓN DE COMBUSTIBLE - BOQUILLA, MX210 Y MX230
03-15	INYECCIÓN DE COMBUSTIBLE - BOQUILLA, MX255 Y MX285
03-16	ACELERADOR MANUAL, MX210 Y MX230
03-17	ACELERADOR MANUAL, MX255 Y MX285
03-18	PEDAL DEL ACELERADOR, MX210 Y MX230
03-19	PEDAL DEL ACELERADOR, MX255 Y MX285
03-20	DEPÓSITOS DE COMBUSTIBLE
03-21	CONDUCTOS DE COMBUSTIBLE CON FILTRO EN LÍNEA, MX210 Y MX230
03-22	CONDUCTOS DE COMBUSTIBLE CON FILTRO SEPARADOR, MX210 Y MX230
03-23	CONDUCTOS DE COMBUSTIBLE CON FILTRO EN LÍNEA, MX255 Y MX285
03-24	CONDUCTOS DE COMBUSTIBLE CON FILTRO SEPARADOR, MX255 Y MX285
03-25	FILTRO SEPARADOR DE COMBUSTIBLE
04-01	MAZO DE CABLES - MOTOR, MX210 Y MX230
04-02	MAZO DE CABLES - MOTOR, MX255 Y MX285
04-03	DISTRIBUCIÓN DE ALIMENTACIÓN
04-04	MÓDULO, CONTROL DEL MOTOR, MX255 Y MX285
04-05	MAZO DE CABLES - CHASIS
04-06	MAZO DE CABLES - VÁLVULA HIDRÁULICA REMOTA
04-07	MAZO DE CABLES - CABINA
04-08	MAZO DE CABLES - TECHO DE LA CABINA, CAMBIADOR DE CD Y REPISA
04-09	MAZO DE CABLES - EJE SUSPENDIDO
04-10	MONTAJE DEL COMPONENTE ELÉCTRICO
04-11	MONTAJE DE COMPONENTES ELÉCTRICOS - FUSIBLES
04-12	CUBIERTA DEL POSTE-A - GRUPO DE INSTRUMENTOS
04-13	CONTROLES - CONSOLA DELANTERA
04-14	CONTROLES - CONSOLA DERECHA
04-15	CONTROLES - CONSOLA DEL GUARDABARROS DERECHO, SIN ATC
04-16	CONTROLES - CONSOLA DEL GUARDABARROS DERECHO, CON ATC
04-17	ALTERNADOR - MONTAJE
04-18	MONTAJE DEL ALTERNADOR - 135 AMPERIOS
04-19	ARRANQUE - MONTAJE
04-20	CONJUNTO DEL MOTOR DE ARRANQUE
04-21	SOLENOIDE - ARRANQUE
04-22	MONTAJE BATERIA
04-23	CONJUNTO DEL LIMPIAPARABRISAS - DELANTERO Y TRASERO
04-24	LAVAPARABRISAS DELANTERO Y TRASERO
04-25	FAROS
04-26	FAROS - AUXILIAR
04-27	MONITOR Y MAZO DE CABLES ISO 11783

CONTENIDO

04-28	LUCES - DE TRABAJO Y DE POSICIÓN DELANTERAS
04-29	LUCES - TECHO DE LA CABINA
04-30	LUCES - GUARDABARROS TRASERO E INTERRUPTOR DE ENGANCHE REMOTO
04-31	LUCES DE TRABAJO - TECHO Y GUARDABARROS TRASEROS
04-32	LUCES - FARO GIRATORIO
04-33	RADIOS, ALTAVOCES Y ANTENAS
04-34	VOLANTE Y COLUMNA
04-35	CONJUNTO DE LA COLUMNA DEL VOLANTE
05-01	VOLANTE Y COLUMNA
05-02	CONJUNTO DE LA COLUMNA DEL VOLANTE
05-03	SISTEMA DE DIRECCIÓN - TDM, BSN JAZ126070
05-04	SISTEMA DE DIRECCIÓN - TDM, ASN JAZ126070
05-05	SISTEMA HIDRÁULICO - BLOQUEO DEL DIFERENCIAL DE LA TDM
05-06	SISTEMA HIDRÁULICO - EJE SUSPENDIDO
05-07	CONJUNTO DE LA VALVULA - EJE SUSPENDIDO DE LA TDM
05-08	EJE DELANTERO - MONTAJE, TDM
05-09	EJE DELANTERO - SUSPENSIÓN, EJE SUSPENDIDO DE LA TDM
05-10	CONJUNTO DEL ALOJAMIENTO DEL EJE DE LA TDM - ESTÁNDAR CON CUBO DE 10 PERNOS, SIN BLOQUEO DEL DIFEREN
05-11	CONJUNTO DEL ALOJAMIENTO DEL EJE DE LA TDM - ESTÁNDAR CON CUBO DE 10 PERNOS
05-12	CONJUNTO DEL ALOJAMIENTO DEL EJE DE LA TDM - ESTÁNDAR CON CUBO DE 12 PERNOS, CON BLOQUEO DEL DIFEREN
05-13	CONJUNTO DEL ALOJAMIENTO DEL EJE DE LA TDM - SUSPENDIDO CON CUBO DE 10 PERNOS
05-14	CONJUNTO DEL ALOJAMIENTO DEL EJE DE LA TDM - SUSPENDIDO CON CUBO DE 10 PERNOS
05-15	CONJUNTO DEL ALOJAMIENTO DEL EJE DE LA TDM - SUSPENDIDO CON CUBO DE 12 PERNOS
05-16	ÁRBOL DE TRANSMISIÓN DEL EJE DELANTERO - TDM, SIN BLOQUEO DEL DIFERENCIAL
05-17	ÁRBOL DE TRANSMISIÓN DEL EJE DELANTERO - TDM, CON BLOQUEO DEL DIFERENCIAL
05-18	PORTADOR Y DIFERENCIAL - TDM, CUBO DE 10 PERNOS, SIN BLOQUEO DEL DIFERENCIAL
05-19	PORTADOR Y DIFERENCIAL - TDM, CUBO DE 10 PERNOS, CON BLOQUEO DEL DIFERENCIAL
05-20	PORTADOR Y DIFERENCIAL - TDM, CUBO DE 12 PERNOS, CON BLOQUEO DEL DIFERENCIAL
05-21	CUBO Y PLANETARIOS DEL EJE DELANTERO - TDM, CUBO DE 10 PERNOS
05-22	CUBO Y PLANETARIOS DEL EJE DELANTERO - TDM, CUBO DE 12 PERNOS
05-23	CONJUNTO DEL CILINDRO DE LA DIRECCIÓN - TDM, CUBO DE 10 PERNOS
05-24	CONJUNTO DEL CILINDRO DE LA DIRECCIÓN - TDM, CUBO DE 12 PERNOS
05-25	RUEDAS DELANTERAS - TDM, CUBO DE 10 PERNOS
05-26	RUEDAS DELANTERAS - TDM, CUBO DE 12 PERNOS
05-27	ESPACIADOR - RUEDAS DELANTERAS DOBLES
06-01	EJE DE TRANSMISIÓN
06-02	CAJA REDUCTORA DE LA TRANSMISIÓN
06-03	TRANSMISIÓN DE VELOCIDAD - ALOJAMIENTO, BSN AJB0355338
06-04	TRANSMISIÓN DE VELOCIDAD - ALOJAMIENTO, BTW AJB0355338 & AJB0355923
06-05	TRANSMISIÓN DE VELOCIDAD - ALOJAMIENTO, ASN AJB0355923

CONTENIDO

06-06	CONJUNTO DE PLACA - MONTAJE DE LA VÁLVULA AL LADO IZQUIERDO
06-07	CONJUNTO DE LA PLACA - MONTAJE DE LA VÁLVULA
06-08	TRANSMISIÓN DE VELOCIDAD - EJE DE ENTRADA SIN VELOCIDAD ULTRALENTA
06-09	TRANSMISIÓN DE VELOCIDAD - EJE DE ENTRADA CON VELOCIDAD ULTRALENTA
06-10	TRANSMISIÓN DE VELOCIDAD - EJE INTERMEDIO SIN VELOCIDAD ULTRALENTA
06-11	TRANSMISIÓN DE VELOCIDAD - EJE INTERMEDIO CON VELOCIDAD ULTRALENTA
06-12	TRANSMISIÓN DE VELOCIDAD - EMBRAGUE DELANTERO DEL EJE DE SALIDA
06-13	TRANSMISIÓN DE VELOCIDAD - EMBRAGUE TRASERO DEL EJE DE SALIDA
06-14	RANGO DE LA TRANSMISIÓN - ALOJAMIENTO, BSN AJB0355338
06-15	RANGO DE LA TRANSMISIÓN - ALOJAMIENTO, BTW AJB0355338 & AJB0355923
06-16	RANGO DE LA TRANSMISIÓN - ALOJAMIENTO, ASN AJB0355923
06-17	CONJUNTO DE LA VÁLVULA - MARCHA LENTA
06-18	TRANSMISIÓN DE RANGO - EJE DE ENTRADA
06-19	TRANSMISIÓN DE RANGO - EMBRAGUE PRINCIPAL
06-20	TRANSMISIÓN DE RANGO - EJE INTERMEDIO
06-21	TRANSMISIÓN - ENGRANAJES Y EJE DEL PIÑÓN
06-22	TRANSMISIÓN - DIFERENCIAL
06-23	TRANSMISIÓN DE RANGO - EMBRAGUE DE LA TDM
06-24	EJE DE LA TDM - EJE DE LA TRANSMISIÓN
06-25	UBICACIÓN DE LA VÁLVULA DE CONTROL DE LA TRANSMISIÓN
06-26	CONJUNTO DE LA VÁLVULA - CONTROL DE LA TRANSMISIÓN (450729A2)
06-27	CONJUNTO DE LA VÁLVULA - CONTROL DE LA TRANSMISIÓN (450721A2)
06-28	CONJUNTO DE LA VÁLVULA - CONTROL DE LA TRANSMISIÓN (450726A2)
06-29	CONJUNTO DE LA VÁLVULA - CONTROL DE LA TRANSMISIÓN (450728A2)
06-30	PEDAL - MARCHA LENTA
06-31	CONJUNTO DE PALANCA - CONTROL DE LA TRANSMISIÓN
06-32	EJE TRASERO - ALOJAMIENTO
06-33	RESPIRADERO DE LA TRANSMISIÓN
06-34	EJE TRASERO - PLANETARIO, MX210, MX230 Y MX255
06-35	EJE TRASERO - PLANETARIO, MX285
06-36	EJE TRASERO - 4 X 98 PULG., MX210 Y MX230
06-37	EJE TRASERO - 4 X 98 PULG., MX255 Y MX285
06-38	TRANSMISIÓN - ACCIONAMIENTO DE LA BOMBA
06-39	CONJUNTO DE LA TOMA DE FUERZA - EJE DE ENTRADA, BSN AJB0355026
06-40	CONJUNTO DE LA TOMA DE FUERZA - EJE DE ENTRADA, ASN AJB0355026
06-41	CONJUNTO DE LA TOMA DE FUERZA - ENGRANAJES DE REDUCCIÓN, VELOCIDAD DOBLE
06-42	CONJUNTO DE LA TOMA DE FUERZA - EJE DE SALIDA, VELOCIDAD DOBLE
06-43	CONJUNTO DE LA TOMA DE FUERZA - EJE DE SALIDA, VELOCIDAD ÚNICA, BSN AJB0355026
06-44	CONJUNTO DE LA TOMA DE FUERZA - EJE DE SALIDA, VELOCIDAD ÚNICA - ASN AJB0355026
06-45	CONJUNTO DE LA TOMA DE FUERZA - PROTECTORES
06-46	RUEDAS TRASERAS DE ACERO SÓLIDO
06-47	CONJUNTO DEL CUBO - RUEDA TRASERA
06-48	ESPACIADOR - RUEDAS TRASERAS DOBLES
06-49	PESOS DE LAS RUEDAS TRASERAS
07-01	FRENOS - PEDAL DEL FRENO
07-02	FRENOS - SISTEMA HIDRÁULICO, SIN FRENOS DE REMOLQUE
07-03	FRENOS - SISTEMA HIDRÁULICO, CON FRENOS HIDRÁULICOS DE REMOLQUE
07-04	FRENOS - SISTEMA HIDRÁULICO, CON FRENOS NEUMÁTICOS DE REMOLQUE

CONTENIDO

07-05	FRENOS - VÁLVULA DE CONTROL
07-06	FRENOS - DIFERENCIAL
07-07	FRENO DE ESTACIONAMIENTO Y EMERGENCIA - PALANCA Y VARILLAJE
07-08	FRENO DE ESTACIONAMIENTO Y EMERGENCIA - SISTEMA HIDRÁULICO
07-09	FRENO DE ESTACIONAMIENTO Y EMERGENCIA - CONJUNTO DE LA VÁLVULA
07-10	FRENO DE ESTACIONAMIENTO Y EMERGENCIA - CONJUNTO DEL FRENO
07-11	FRENO DE ESTACIONAMIENTO - SOLTAR, BSN AJB0355923
07-12	FRENO DE ESTACIONAMIENTO - SOLTAR, ASN AJB0355923
07-13	TRAV ES DO REBOQUE HIDRÁULICO, EXCEPTO NA ITÁLIA
07-14	FRENOS DE REMOLQUE - HIDRÁULICOS, SÓLO ITALIA
07-15	FRENOS DE REMOLQUE - NEUMÁTICOS, TRANSMISIÓN Y MONTAJE DEL COMPRESOR DE AIRE
07-16	FRENOS DE REMOLQUE - NEUMÁTICOS, DEPÓSITO, EXCEPTO ITALIA
07-17	FRENOS DE REMOLQUE - NEUMÁTICOS, DEPÓSITO, SÓLO ITALIA
07-18	FRENOS DE REMOLQUE - NEUMÁTICOS, VÁLVULAS
07-19	FRENOS DE REMOLQUE - NEUMÁTICOS, ACOPLADORES, EXCEPTO ITALIA
07-20	FRENOS DE REMOLQUE - NEUMÁTICOS, ACOPLADORES, SÓLO ITALIA
08-01	SISTEMA HIDRÁULICO - REFRIGERADOR DE ACEITE
08-02	SISTEMA HIDRÁULICO - 3ER REFRIGERADOR DE ACEITE
08-03	SISTEMA HIDRÁULICO - BOMBA DE CARGA
08-04	SISTEMA HIDRÁULICO - FILTRO Y BOMBA DE PISTÓN, CAPACIDAD DE FLUJO ESTÁNDAR
08-05	SISTEMA HIDRÁULICO - FILTRO Y BOMBA DE PISTÓN, CAPACIDAD DE FLUJO ALTA
08-06	SISTEMA HIDRÁULICO - PRESIÓN REGULADA
08-07	SISTEMA HIDRÁULICO - VELOCIDAD ULTRALENTA
08-08	SISTEMA HIDRÁULICO - LUBRICACIÓN DE TRANSMISIÓN
08-09	SISTEMA HIDRÁULICO - ENGANCHE
08-10	
08-11	SISTEMA HIDRÁULICO - ENGANCHE DELANTERO
08-12	SISTEMA HIDRÁULICO - VÁLVULA DE BLOQUEO DEL DIFERENCIAL/TDF
08-13	SISTEMA HIDRÁULICO - ACOPLADORES REMOTOS
08-14	SISTEMA HIDRÁULICO - ALIMENTACION AUXILIAR
08-15	SISTEMA HIDRÁULICO - RETORNO DEL MOTOR
08-16	CONJUNTO DE LA VÁLVULA DE PRIORIDAD Y REGULADORA
08-17	CONJUNTO DE LA VÁLVULA DE BLOQUEO DEL DIFERENCIAL Y TDF
08-18	BLOQUE DE VÁLVULAS HIDRÁULICAS REMOTAS
08-19	CONJUNTO DE LA VÁLVULA DEL BLOQUE DE DISTRIBUCIÓN
08-20	VALVULA DE CONTROL HIDRÁULICA REMOTA
08-21	CONJUNTO DE LA VÁLVULA DEL ENGANCHE
08-22	SOPORTE PARA ACOPLAMIENTO HIDRÁULICO REMOTO
08-23	ACOPLADORES HIDRÁULICOS REMOTOS
08-24	CONJUNTO DEL CILINDRO - ENGANCHE (305022A2)
08-25	CONJUNTO DEL CILINDRO - ENGANCHE (278277A3)
08-26	CONJUNTO DEL CILINDRO - ENGANCHE (278419A3)
08-27	CONJUNTO DE LA VÁLVULA DE ALIMENTACIÓN AUXILIAR
09-01	CHASIS DELANTERO
09-02	GANCHO DE REMOLQUE DELANTERO
09-03	PESOS DELANTEROS
09-04	PESOS DELANTEROS
09-05	ENGANCHE DELANTERO
09-06	GUARDABARROS - DELANTERO, ESTRECHO

CONTENIDO

09-07	GUARDABARROS - DELANTERO, ANCHO
09-08	GUARDABARROS - TRASERO
09-09	GUARDABARROS, TRASERO, EXTRA ANCHO
09-10	INCLINACIÓN DEL CAPÓ
09-11	PROTECTORES DEL VENTILADOR
09-12	CAPÓ FIJO
09-13	CABINA - MONTAJE Y CHASIS, BSN AJB0355923
09-14	CABINA - MONTAJE Y CHASIS, ASN AJB0355923
09-15	CABINA - TECHO
09-16	CABINA - REVESTIMIENTO EXTERIOR
09-17	CABINA - PELDAÑOS
09-18	CABINA - PELDAÑO DE LA VENTANA DELANTERA
09-19	CABINA - PUERTA
09-20	CABINA - VENTANA TRASERA
09-21	CABINA - CRISTAL FIJO
09-22	ESPEJOS
09-23	CABINA - REVESTIMIENTO ESTÁNDAR
09-24	CABINA - REVESTIMIENTO DELUXE Y LUXURY
09-25	CABINA - ALFOMBRILLA Y AISLAMIENTO
09-26	CABINA - REVESTIMIENTO, GUARDABARROS
09-27	CABINA - REVESTIMIENTO, POSTES DE LA CABINA
09-28	CABINA - PANEL DE INSTRUMENTOS
09-29	CONJUNTO DEL ASIENTO
09-30	CONJUNTO DE COJÍN - ASIENTO
09-31	CONJUNTO DE LA SUSPENSIÓN - ASIENTO
09-32	CONJUNTO DE LA SUSPENSIÓN SEMIACTIVA - ASIENTO
09-33	ASIENTO - PARA EL INSTRUCTOR
09-34	CONSOLA, DERECHA, CABINA ESTÁNDAR
09-35	CONSOLA, DERECHA, CABINA DELUXE Y LUXURY
09-36	MONTAJE DEL MONITOR - TECHO DE LA CABINA
09-37	MONTAJE DEL MONITOR - POSTE A DE LA CABINA
09-38	AIRE ACONDICIONADO - MONTAJE DEL COMPRESOR
09-39	AIRE ACONDICIONADO - CONDENSADOR
09-40	SISTEMA DE CALEFACCIÓN
09-41	AIRE ACONDICIONADO - UNIDAD DE CONTROL CLIMÁTICO, SIN CONTROL AUTOMÁTICO DE LA TEMPERATURA
09-42	AIRE ACONDICIONADO - UNIDAD DE CONTROL CLIMÁTICO, CON CONTROL AUTOMÁTICO DE LA TEMPERATURA
09-43	AIRE ACONDICIONADO - FILTRO DE AIRE
09-44	AIRE ACONDICIONADO - CONDUCTOS
09-45	CABINA - AISLAMIENTO
09-46	BARRA DE TIRO Y CUBREJUNTAS
09-47	BARRA DE TIRO Y CUBREJUNTAS - SÓLO ITALIA
09-48	ENGANCHE - SOPORTES Y EJE BASCULANTE
09-49	ENGANCHE - ARTICULACIÓN SUPERIOR
09-50	ENGANCHE - ARTICULACIONES DE ELEVACIÓN
09-51	ENGANCHE - ARTICULACIONES DE ELEVACIÓN INFERIORES
09-52	ENGANCHE - LIMITADOR DE OSCILACIÓN
09-53	ENGANCHE - SENSOR DE POSICIÓN
09-54	ENGANCHE - PASADORES DE CONTROL DE TIRO
09-55	ENGANCHE DEL REMOLQUE - PASADOR MANUAL, SÓLO FRANCIA (CRAMER)

CONTENIDO

09-56	ENGANCHE DEL REMOLQUE - PASADOR MANUAL, SÓLO FRANCIA (CBM)
09-57	ENGANCHE DEL REMOLQUE - GANCHO AUTOMÁTICO, SÓLO ALEMANIA (CRAMER)
09-58	ENGANCHE DEL REMOLQUE - GANCHO AUTOMÁTICO, 37 MM, SÓLO ALEMANIA (CRAMER)
09-59	ENGANCHE DEL REMOLQUE - GANCHO AUTOMÁTICO, 32 MM, SÓLO ALEMANIA (CRAMER)
09-60	ENGANCHE DEL REMOLQUE - GANCHO AUTOMÁTICO, 38 MM, SÓLO ALEMANIA (CBM)
09-61	ENGANCHE DEL REMOLQUE - PASADOR MANUAL, SÓLO ITALIA (CBM)
09-62	CALCOMANÍAS
09-63	CALCOMANÍAS - STEYR
09-64	CALCOMANÍAS

SUMÁRIO

02-01	PROTECÇÃO DO RADIADOR E VENTOINHA
02-02	CONJUNTO DO RADIADOR
02-03	SISTEMA DE ELIMINAÇÃO DE AR
02-04	SISTEMA DE INDUÇÃO DE AR - TRABALHOS NORMAIS
02-05	SISTEMA DE INDUÇÃO DE AR - TRABALHOS PESADOS
02-06	ARREFECEDOR FINAL
02-07	SISTEMA DE ARRANQUE A ÉTER
02-08	SISTEMA DE ESCAPE
02-09	SUPORTE DO MOTOR
02-10	PROTECÇ ES DO VOLANTE DO MOTOR
02-11	SISTEMA DA BOMBA DE ÁGUA, MODELOS MX210 E MX230
02-12	SISTEMA DA BOMBA DE ÁGUA, MODELOS MX255 E MX285
02-13	COBERTURA DA ENGRENAGEM DIANTEIRA, MODELOS MX210 E MX230
02-14	COBERTURA DA ENGRENAGEM DIANTEIRA, MODELOS MX255 E MX285
02-15	TUBOS DE DISTRIBUIÇÃO, MODELOS MX210 E MX230
02-16	TUBOS DE DISTRIBUIÇÃO, MODELOS MX255 E MX285
02-17	SISTEMA DO TURBOCOMPRESSOR, MODELOS MX210 E MX230
02-18	SISTEMA DO TURBOCOMPRESSOR, MODELOS MX255 E MX285
02-19	CONJUNTO DO TURBOCOMPRESSOR, MODELOS MX210 E MX230
02-20	CONJUNTO DO TURBOCOMPRESSOR, MODELOS MX255 E MX285
02-21	ACCIONADOR DA VÁLVULA DE ESCAPE, MODELOS MX210 E MX230
02-22	ACCIONADOR DA VÁLVULA DE ESCAPE, MODELOS MX255 E MX285
02-23	FILTRO E ARREFECEDOR DO ÓLEO, MODELOS MX210 E MX230
02-24	FILTRO E ARREFECEDOR DO ÓLEO, MODELOS MX255 E MX285
02-25	BOMBA DE ÓLEO E DEPÓSITO DO ÓLEO
02-26	COBERTURA DA CABEÇA DO CILINDRO, MODELOS MX210 E MX230, BSN JAZ132841
02-27	COBERTURA DA CABEÇA DO CILINDRO, MODELOS MX210 E MX230, ASN JAZ132841
02-28	COBERTURA DA CABEÇA DO CILINDRO, MODELOS MX255 E MX285
02-29	CABEÇA DO CILINDRO - MECANISMO DAS VÁLVULAS, MODELOS MX210 E MX230
02-30	CABEÇA DO CILINDRO - MECANISMO DAS VÁLVULAS, MODELOS MX255 E MX285
02-31	FILTRO E ÁGUA DO TERMÓSTATO
02-32	RESPIRADOURO DO CÁRTER DO MOTOR, MODELOS MX210 E MX230, BSN JAZ132841
02-33	RESPIRADOURO DO CÁRTER DO MOTOR, MODELOS MX255 E MX285
02-34	EIXO DE CAMES, MODELOS MX210 E MX230
02-35	EIXO DE CAMES, MODELOS MX255 E MX285
02-36	BLOCO DO CILINDRO, MODELOS MX210 E MX230
02-37	BLOCO DO CILINDRO, MODELOS MX255 E MX285
02-38	KIT PARA RECONDICIONAMENTO DO MOTOR, MODELOS MX210 E MX230
02-39	KIT PARA RECONDICIONAMENTO DO MOTOR, MODELOS MX255 E MX285
02-40	EIXO DA CAMBOTA
02-41	VOLANTE DO MOTOR
02-42	PIST ES - BIELAS, MODELOS MX210 E MX230
02-43	PIST ES - BIELAS, MODELOS MX255 E MX285
02-44	KIT DE VEDAÇÃO - VÁLVULA ESMERILHADA, MODELOS MX210 E MX230
02-45	KIT DE VEDAÇÃO - VÁLVULA ESMERILHADA, MODELOS MX255 E MX285
02-46	KIT DE VEDAÇÃO - BLOCO DO CILINDRO, MODELOS MX210 E MX230
02-47	KIT DE VEDAÇÃO - BLOCO DO CILINDRO, MODELOS MX255 E MX285
02-48	KIT DE VEDAÇÃO - MANUTENÇÃO BÁSICA DO MOTOR, MODELOS MX210 E MX230

SUMÁRIO

02-49	KIT DE VEDAÇÃO - MANUTENÇÃO BÁSICA DO MOTOR, MODELOS MX255 E MX285
03-01	SISTEMA DE INJECÇÃO DE COMBUSTÍVEL, MODELOS MX210 E MX230
03-02	SISTEMA DE INJECÇÃO DE COMBUSTÍVEL, MODELOS MX255 E MX285
03-03	ANERÓIDE E SISTEMA DA VÁLVULA DE ESCAPE, MODELOS MX210 E MX230
03-04	FILTRO DE COMBUSTÍVEL - BOMBA DE TRANSFERÊNCIA, MODELOS MX210 E MX230
03-05	BOMBA DE TRANSFERÊNCIA DE COMBUSTÍVEL, MODELOS MX255 E MX285
03-06	FILTRO DE COMBUSTÍVEL E LIGAÇ ES, MODELOS MX255 E MX285
03-07	INJECÇÃO DE COMBUSTÍVEL - BOMBA E TRANSMISSÃO, MODELOS MX210 E MX230
03-08	BOMBA DE INJECÇÃO DE COMBUSTÍVEL, MODELOS MX255 E MX285
03-09	BOMBA DE INJECÇÃO DE COMBUSTÍVEL, MODELOS MX255 E MX285
03-10	BOMBA DE INJECÇÃO DE COMBUSTÍVEL, MODELOS MX255 E MX285
03-11	BOMBA DE INJECÇÃO DE COMBUSTÍVEL, MODELOS MX255 E MX285
03-12	BOMBA DE INJECÇÃO DE COMBUSTÍVEL, MODELOS MX255 E MX285
03-13	BOMBA DE INJECÇÃO DE COMBUSTÍVEL - ENGRENAGEM E SUPORTES DE MONTAGEM, MODELOS MX255 E MX285
03-14	BOCAL DE INJECÇÃO DE COMBUSTÍVEL, MODELOS MX210 E MX230
03-15	BOCAL DE INJECÇÃO DE COMBUSTÍVEL, MODELOS MX255 E MX285
03-16	ACELERADOR DE MÃO, MODELOS MX210 E MX230
03-17	ACELERADOR DE MÃO, MODELOS MX255 E MX285
03-18	PEDAL DE ACELERAÇÃO, MODELOS MX210 E MX230
03-19	PEDAL DE ACELERAÇÃO, MODELOS MX255 E MX285
03-20	DEPÓSITOS DE COMBUSTÍVEL
03-21	LINHAS DE COMBUSTÍVEL COM FILTRO EM LINHA, MX210 E MX230
03-22	LINHAS DE COMBUSTÍVEL COM FILTRO SEPARADOR, MX210 E MX230
03-23	LINHAS DE COMBUSTÍVEL COM FILTRO EM LINHA, MX255 E MX285
03-24	LINHAS DE COMBUSTÍVEL COM FILTRO SEPARADOR, MX255 E MX285
03-25	FILTRO SEPARADOR DE COMBUSTÍVEL
04-01	CONJUNTO DE FIOS DO MOTOR, MODELOS MX210 E MX230
04-02	CONJUNTO DE FIOS DO MOTOR, MODELOS MX255 E MX285
04-03	DISTRIBUIÇÃO DE POTÊNCIA
04-04	MÓDULO DE CONTROLO DO MOTOR, MODELOS MX255 E MX285
04-05	CONJUNTO DE FIOS - CHASSI
04-06	CONJUNTO DE FIOS - VÁLVULA HIDRÁULICA REMOTA
04-07	CONJUNTO DE FIOS DA CABINA
04-08	CONJUNTO DE FIOS - TECTO DA CABINA, PRATELEIRA E MULTI-LEITOR DE CDS
04-09	CONJUNTO DE FIOS - EIXO SUSPENSO
04-10	MONTAGEM DOS COMPONENTES ELÉCTRICOS
04-11	MONTAGEM DOS COMPONENTES ELÉCTRICOS - FUSÍVEIS
04-12	COBERTURA DO POSTE A - CONJUNTO DE INSTRUMENTOS
04-13	CONTROLOS - CONSOLA DIANTEIRA
04-14	CONTROLOS - CONSOLA DO LADO DIREITO
04-15	CONTROLOS - CONSOLA DO GUARDA-LAMAS DIREITO, SEM ATC
04-16	CONTROLOS - CONSOLA DO GUARDA-LAMAS DIREITO, COM ATC
04-17	MONTAGEM DO ALTERNADOR
04-18	CONJUNTO DO ALTERNADOR - 135 A
04-19	MONTAGEM DO MOTOR DE ARRANQUE
04-20	CONJUNTO DO MOTOR DE ARRANQUE
04-21	SOLENÓIDE DO MOTOR DE ARRANQUE
04-22	BATERÍA, CABLES Y CAJA DE LA BATERÍA

SUMÁRIO

04-23	CONJUNTO DO LIMPA PÁRA-BRISAS - DIANTEIRO E TRASEIRO
04-24	LAVA PÁRA-BRISAS DIANTEIRO E TRASEIRO
04-25	FARÓIS DIANTEIROS
04-26	FARÓIS DIANTEIROS AUXILIARES
04-27	CONJUNTO DE FIOS E MONITOR ISO 11783
04-28	LUZES DE POSIÇÃO E DE TRABALHO DIANTEIRAS
04-29	LUZES DO TECTO DA CABINA
04-30	LUZES DO GUARDA-LAMAS TRASEIRO E DO INTERRUPTOR DE ENGATE REMOTO
04-31	LUZES DE TRABALHO DO TECTO E GUARDA-LAMAS TRASEIROS
04-32	FAROL ROTATIVO
04-33	RÁDIOS, COLUNAS E ANTENAS
04-34	VOLANTE E COLUNA
04-35	CONJUNTO DA COLUNA DA DIRECÇÃO
05-01	VOLANTE E COLUNA
05-02	CONJUNTO DA COLUNA DA DIRECÇÃO
05-03	SISTEMA DE DIRECÇÃO - TMD, BSN JAZ126070
05-04	SISTEMA DE DIRECÇÃO - TMD, ASN JAZ126070
05-05	SISTEMA HIDRÁULICO - TRANCA DO DIFERENCIAL DA TMD
05-06	SISTEMA HIDRÁULICO - EIXO SUSPENSO
05-07	CONJUNTO DA VÁLVULA - EIXO DA TMD SUSPENSO
05-08	SUPORTE DO EIXO DIANTEIRO - TMD
05-09	SUSPENSÃO DO EIXO DIANTEIRO - TMD SUSPENSA
05-10	CONJUNTO DA ESTRUTURA DO EIXO DA TMD - STANDARD, COM CUBO DE 10 PARAFUSOS
05-11	CONJUNTO DA ESTRUTURA DO EIXO DA TMD - STANDARD, COM CUBO DE 10 PARAFUSOS, COM TRANCA DO DIFERENCIAL
05-12	CONJUNTO DA ESTRUTURA DO EIXO DA TMD - STANDARD, COM CUBO DE 12 PARAFUSOS, COM TRANCA DO DIFERENCIAL
05-13	CONJUNTO DA ESTRUTURA DO EIXO DA TMD - SUSPENSO, COM CUBO DE 10 PARAFUSOS, SEM TRANCA DO DIFERENCIAL
05-14	CONJUNTO DA ESTRUTURA DO EIXO DA TMD - SUSPENSO, COM CUBO DE 10 PARAFUSOS, COM TRANCA DO DIFERENCIAL
05-15	CONJUNTO DA ESTRUTURA DO EIXO DA TMD - SUSPENSO, COM CUBO DE 12 PARAFUSOS, COM TRANCA DO DIFERENCIAL
05-16	EIXO DE TRANSMISSÃO DO EIXO DIANTEIRO - TMD, SEM TRANCA DO DIFERENCIAL
05-17	EIXO DE TRANSMISSÃO DO EIXO DIANTEIRO - TMD, COM TRANCA DO DIFERENCIAL
05-18	CARREGADOR E DIFERENCIAL - TMD, CUBO DE 10 PARAFUSOS, SEM TRANCA DO DIFERENCIAL
05-19	CARREGADOR E DIFERENCIAL - TMD, CUBO DE 10 PARAFUSOS, COM TRANCA DO DIFERENCIAL
05-20	CARREGADOR E DIFERENCIAL - TMD, CUBO DE 12 PARAFUSOS, COM TRANCA DO DIFERENCIAL
05-21	PLANETÁRIOS E CUBO DO EIXO DIANTEIRO - TMD, CUBO DE 10 PARAFUSOS
05-22	PLANETÁRIOS E CUBO DO EIXO DIANTEIRO - TMD, CUBO DE 12 PARAFUSOS
05-23	CONJUNTO DO CILINDRO DA DIRECÇÃO - TMD, CUBO DE 10 PARAFUSOS
05-24	CONJUNTO DO CILINDRO DA DIRECÇÃO - TMD, CUBO DE 12 PARAFUSOS
05-25	RODAS DIANTEIRAS - TMD, CUBO DE 10 PARAFUSOS
05-26	RODAS DIANTEIRAS - TMD, CUBO DE 12 PARAFUSOS
05-27	ESPAÇADOR - RODAS DIANTEIRAS DUPLAS

SUMÁRIO

06-01	EIXO DE ACCIONAMENTO DA TRANSMISSÃO
06-02	CAIXA DE QUEDA DA TRANSMISSÃO
06-03	TRANSMISSÃO DA VELOCIDADE - ESTRUTURA, BSN AJB0355338
06-04	TRANSMISSÃO DA VELOCIDADE - ESTRUTURA, BTW AJB0355338 & AJB0355923
06-05	TRANSMISSÃO DA VELOCIDADE - ESTRUTURA, ASN AJB0355923
06-06	CONJUNTO DA PLACA - SUPORTE DA VÁLVULA
06-07	CONJUNTO DA PLACA - SUPORTE DA VÁLVULA
06-08	TRANSMISSÃO DA VELOCIDADE - EIXO DE ENTRADA SEM REDUÇÃO DE VELOCIDADE
06-09	TRANSMISSÃO DA VELOCIDADE - EIXO DE ENTRADA COM REDUÇÃO DE VELOCIDADE
06-10	TRANSMISSÃO DA VELOCIDADE - CONTRA-EIXO SEM REDUÇÃO DE VELOCIDADE
06-11	TRANSMISSÃO DA VELOCIDADE - CONTRA-EIXO COM REDUÇÃO DE VELOCIDADE
06-12	TRANSMISSÃO DA VELOCIDADE - EMBRAIAGEM DIANTEIRA DO EIXO DE SAÍDA
06-13	TRANSMISSÃO DA VELOCIDADE - EMBRAIAGEM TRASEIRA DO EIXO DE SAÍDA
06-14	TRANSMISSÃO DAS RELAÇ ES DE VELOCIDADE - ESTRUTURA, BSN AJB0355338
06-15	TRANSMISSÃO DAS RELAÇ ES DE VELOCIDADE - ESTRUTURA, BTW AJB0355338 & AJB0355923
06-16	TRANSMISSÃO DAS RELAÇ ES DE VELOCIDADE - ESTRUTURA, ASN AJB0355923
06-17	CONJUNTO DA VÁLVULA - DESLOCAMENTO LENTO
06-18	TRANSMISSÃO DAS RELAÇ ES DE VELOCIDADE - EIXO DE ENTRADA
06-19	TRANSMISSÃO DAS RELAÇ ES DE VELOCIDADE - EMBRAIAGEM PRINCIPA
06-20	TRANSMISSÃO DAS RELAÇ ES DE VELOCIDADE - CONTRA-EIXO
06-21	TRANSMISSÃO - EIXO DO PINHÃO E ENGRENAGENS
06-22	TRANSMISSÃO - DIFERENCIAL
06-23	TRANSMISSÃO DAS RELAÇ ES DE VELOCIDADE - EMBRAIAGEM DA TMD
06-24	EIXO DA TMD - EIXO DE TRANSMISSÃO
06-25	LOCALIZAÇÃO DA VÁLVULA DE CONTROLO DA TRANSMISSÃO
06-26	CONJUNTO DA VÁLVULA - CONTROLO DA TRANSMISSÃO (450729A2)
06-27	CONJUNTO DA VÁLVULA - CONTROLO DA TRANSMISSÃO (450721A2)
06-28	CONJUNTO DA VÁLVULA - CONTROLO DA TRANSMISSÃO (450726A2)
06-29	CONJUNTO DA VÁLVULA - CONTROLO DA TRANSMISSÃO (450728A2)
06-30	PEDAL GRADUAL
06-31	CONJUNTO DA ALAVANCA - CONTROLO DA TRANSMISSÃO
06-32	CÁRTER DO EIXO TRASEIRO
06-33	RESPIRADOR - TRANSMISSÃO
06-34	PLANETÁRIO DO EIXO TRASEIRO, MODELOS MX210, MX230 E MX255
06-35	PLANETÁRIO DO EIXO TRASEIRO, MODELO MX285
06-36	EIXO TRASEIRO - 4 X 98 POLEGADAS, MODELOS MX210 E MX230
06-37	EIXO TRASEIRO - 4 X 98 POLEGADAS, MODELOS MX255 E MX285
06-38	TRANSMISSÃO - TRANSMISSÃO DA BOMBA
06-39	CONJUNTO DA TOMADA DE FORÇA - EIXO DE ENTRADA, BSN AJB0355026
06-40	CONJUNTO DA TOMADA DE FORÇA - EIXO DE ENTRADA, ASN AJB0355026
06-41	CONJUNTO DA TOMADA DE FORÇA - ENGRENAGEM DE REDUÇÃO, DUAS VELOCIDADES
06-42	CONJUNTO DA TOMADA DE FORÇA - EIXO DE SAÍDA, DUAS VELOCIDADES
06-43	CONJUNTO DA TOMADA DE FORÇA - EIXO DE SAÍDA, UMA VELOCIDADE, BSN AJB0355026
06-44	CONJUNTO DA TOMADA DE FORÇA - EIXO DE SAÍDA, UMA VELOCIDADE - ASN AJB0355026
06-45	CONJUNTO DA TOMADA DE FORÇA - PROTECÇ ES

SUMÁRIO

06-46	RODAS TRASEIRAS DE AÇO SÓLIDO
06-47	CONJUNTO DO CUBO - RODA TRASEIRA
06-48	ESPAÇADOR - RODAS TRASEIRAS DUPLAS
06-49	PESOS PARA AS RODAS TRASEIRAS
07-01	TRAV ES - PEDAL DO TRAVÃO
07-02	TRAV ES - SISTEMA HIDRÁULICO, SEM TRAV ES DO REBOQUE
07-03	TRAV ES - SISTEMA HIDRÁULICO, COM TRAV ES DO REBOQUE HIDRÁULICO
07-04	TRAV ES - SISTEMA HIDRÁULICO, COM TRAV ES DO REBOQUE PNEUMÁTICO
07-05	TRAV ES - VÁLVULA DE CONTROLO
07-06	TRAV ES - DIFERENCIAL
07-07	TRAVÃO DE ESTACIONAMENTO E EMERGÊNCIA - ALAVANCA E LIGAÇÃO
07-08	TRAVÃO DE ESTACIONAMENTO E EMERGÊNCIA - SISTEMA HIDRÁULICO
07-09	TRAVÃO DE ESTACIONAMENTO E EMERGÊNCIA - CONJUNTO DA VÁLVULA
07-10	TRAVÃO DE ESTACIONAMENTO E EMERGÊNCIA - CONJUNTO DO TRAVÃO
07-11	DESENGATE DO TRAVÃO DE ESTACIONAMENTO, BSN AJB0355923
07-12	DESENGATE DO TRAVÃO DE ESTACIONAMENTO, ASN AJB0355923
07-13	TRAV ES DO REBOQUE HIDRÁULICO, EXCEPTO NA ITÁLIA
07-14	TRAV ES DO REBOQUE HIDRÁULICO - APENAS NA ITÁLIA
07-15	TRAV ES DO REBOQUE PNEUMÁTICO - SUPORTE DO COMPRESSOR DE AR E TRANSMISSÃO
07-16	TRAV ES DO REBOQUE PNEUMÁTICO - RESERVATÓRIO, EXCEPTO NA ITÁLIA
07-17	TRAV ES DO REBOQUE PNEUMÁTICO - RESERVATÓRIO, APENAS NA ITÁLIA
07-18	TRAV ES DO REBOQUE PNEUMÁTICO - VÁLVULAS
07-19	TRAV ES DO REBOQUE PNEUMÁTICO - ACOPLADORES, EXCEPTO NA ITÁLIA
07-20	TRAV ES DO REBOQUE PNEUMÁTICO - ACOPLADORES, APENAS NA ITÁLIA
08-01	SISTEMA HIDRÁULICO - ARREFECEDOR DO ÓLEO
08-02	SISTEMA HIDRÁULICO - 3 ARREFECEDOR DO ÓLEO
08-03	BOMBA DE CARGA DO SISTEMA HIDRÁULICO
08-04	SISTEMA HIDRÁULICO - BOMBA DO PISTÃO E FILTRO, CAPACIDADE DE FLUXO STANDARD
08-05	SISTEMA HIDRÁULICO - BOMBA DO PISTÃO E FILTRO, CAPACIDADE DE FLUXO ELEVADO
08-06	PRESSÃO REGULADA DO SISTEMA HIDRÁULICO
08-07	SISTEMA HIDRÁULICO - REDUÇÃO DE VELOCIDADE
08-08	SISTEMA HIDRÁULICO - LUBRIFICAÇÃO DA TRANSMISSÃO
08-09	ENGATE DO SISTEMA HIDRÁULICO
08-10	
08-11	ENGATE DIANTEIRO DO SISTEMA HIDRÁULICO
08-12	SISTEMA HIDRÁULICO - VÁLVULA DA TRANCA DO DIFERENCIAL/TDF
08-13	ACOPLADORES REMOTOS DO SISTEMA HIDRÁULICO
08-14	POTÊNCIA AUXILIAR DO SISTEMA HIDRÁULICO
08-15	RETORNO DO MOTOR DO SISTEMA HIDRÁULICO
08-16	CONJUNTO DA VÁLVULA DA PRIORIDADE E REGULADORA
08-17	CONJUNTO DA VÁLVULA DA TRANCA DO DIFERENCIAL E TDF
08-18	CONJUNTO DE VÁLVULAS HIDRÁULICAS REMOTAS
08-19	CONJUNTO DA VÁLVULA DO TUBO DE DISTRIBUIÇÃO
08-20	VÁLVULA DE CONTROLO HIDRÁULICO REMOTA
08-21	CONJUNTO DA VÁLVULA DO ENGATE
08-22	SUPORTE DE ACOPLAMENTO HIDRÁULICO REMOTO
08-23	ACOPLAMENTOS HIDRÁULICOS REMOTOS
08-24	CONJUNTO DO CILINDRO - ENGATE (305022A2)

SUMÁRIO

08-25	CONJUNTO DO CILINDRO - ENGATE (278277A3)
08-26	CONJUNTO DO CILINDRO - ENGATE (278419A3)
08-27	CONJUNTO DA VÁLVULA DA RESERVA DE POTÊNCIA
09-01	ARMAÇÃO DIANTEIRA
09-02	FORQUILHA DE REBOQUE DIANTEIRA
09-03	PESOS DIANTEIROS
09-04	PESOS DIANTEIROS
09-05	ENGATE DIANTEIRO
09-06	GUARDA-LAMAS DIANTEIROS - ESTREITOS
09-07	GUARDA-LAMAS DIANTEIROS - LARGOS
09-08	GUARDA-LAMAS TRASEIROS
09-09	GUARDA LAMAS TRASEIROS - EXTRA LARGOS
09-10	CAP INCLINÁVEL
09-11	PROTECÇ ES DA VENTOINHA
09-12	CAP FIXO
09-13	SUPORTES E ARMAÇÃO DA CABINA, BSN AJB0355923
09-14	SUPORTES E ARMAÇÃO DA CABINA, ASN AJB0355923
09-15	TECTO DA CABINA
09-16	COBERTURA EXTERIOR DA CABINA
09-17	DEGRAUS DA CABINA
09-18	DEGRAU DA JANELA DIANTEIRA DA CABINA
09-19	PORTA DA CABINA
09-20	JANELA TRASEIRA DA CABINA
09-21	CABINA DE VIDRO FIXO
09-22	ESPELHOS
09-23	FORRO DO TECTO DA CABINA - FORRO STANDARD
09-24	FORRO DO TECTO DA CABINA - FORRO DELUXE E DE LUXO
09-25	TAPETE DO CHÃO DA CABINA E ISOLAMENTO
09-26	COBERTURA DOS GUARDA-LAMAS DA CABINA
09-27	COBERTURA DOS POSTES DA CABINA
09-28	PAINEL DE INSTRUMENTOS DA CABINA
09-29	CONJUNTO DO ASSENTO
09-30	CONJUNTO DA ALMOFADA DO ASSENTO
09-31	CONJUNTO DA SUSPENSÃO DO ASSENTO
09-32	CONJUNTO DA SUSPENSÃO SEMI-ACTIVA DO ASSENTO
09-33	ASSENTO DE INSTRUÇÃO
09-34	CONSOLA DIREITA DA CABINA STANDARD
09-35	CONSOLA DIREITA DA CABINA DELUXE E DE LUXO
09-36	SUPORTE DO MONITOR NO TECTO DA CABINA
09-37	SUPORTE DO MONITOR NO POSTE A DA CABINA
09-38	AR CONDICIONADO - SUPORTE DO COMPRESSOR
09-39	CONDENSADOR DO AR CONDICIONADO
09-40	SISTEMA DE AQUECIMENTO
09-41	AR CONDICIONADO - CLIMATIZADOR, SEM CONTROLO DA TEMPERATURA AUTOMÁTICO
09-42	AR CONDICIONADO - CLIMATIZADOR, COM CONTROLO DA TEMPERATURA AUTOMÁTICO
09-43	FILTRO DE AR DO AR CONDICIONADO
09-44	CONDUTAS DO AR CONDICIONADO
09-45	ISOLAMENTO DA CABINA
09-46	BARRA DE TRACÇÃO E TIRA DE SEGURANÇA

SUMÁRIO

09-47	BARRA DE TRACÇÃO E TIRA DE SEGURANÇA - APENAS NA ITÁLIA
09-48	SUPORTES E EIXO OSCILANTE DO ENGATE
09-49	ELO SUPERIOR DO ENGATE
09-50	ELOS DE ELEVAÇÃO DO ENGATE
09-51	ELOS DE ELEVAÇÃO INFERIORES DO ENGATE
09-52	LIMITADOR DE OSCILAÇÃO DO ENGATE
09-53	SENSOR DA POSIÇÃO DO ENGATE
09-54	PINOS DE CONTROLO DA TRACÇÃO DO ENGATE
09-55	PINO MANUAL DO ENGATE DO REBOQUE, APENAS NA FRANÇA (CRAMER)
09-56	PINO MANUAL DO ENGATE DO REBOQUE, APENAS NA FRANÇA (CBM)
09-57	FORQUILHA AUTOMÁTICA DO ENGATE DO REBOQUE, APENAS NA ALEMANHA (CRAMER)
09-58	FORQUILHA AUTOMÁTICA (37 MM) DO ENGATE DO REBOQUE, APENAS NA ALEMANHA (CRAMER)
09-59	FORQUILHA AUTOMÁTICA (32 MM) DO ENGATE DO REBOQUE, APENAS NA ALEMANHA (CRAMER)
09-60	FORQUILHA AUTOMÁTICA (38 MM) DO ENGATE DO REBOQUE, APENAS NA ALEMANHA (CBM)
09-61	ATTACCO DEL RIMORCHIO - PERNO MANUALE, SOLO PER L ITALIA (CBM)
09-62	AUTOCOLANTES
09-63	AUTOCOLANTES STEYR
09-64	AUTOCOLANTES

INHOUDSOPGAVE

02-01	RADIATOR EN VENTILATORKAP
02-02	RADIATEUR
02-03	ONTLUCHTINGSSYSTEEM
02-04	LUCHTINDUCTIESYSTEEM - STANDAARD BEDRIJF
02-05	LUCHTINDUCTIESYSTEEM - ZEER ZWAAR BEDRIJF
02-06	NAKOELER
02-07	ETHERSTARTSYSTEEM
02-08	UITLAATSYSTEEM
02-09	MOTOROPHANGING
02-10	VLIEGWIELSCHERMEN
02-11	WATERPOMPSYSTEEM, MX210 EN MX230
02-12	WATERPOMPSYSTEEM, MX255 EN MX285
02-13	KLEPPENDEKSEL VOOR, MX210 EN MX230
02-14	KLEPPENDEKSEL VOOR, MX255 EN MX285
02-15	SPRUITSTUKKEN, MX210 EN MX230
02-16	SPRUITSTUKKEN, MX255 EN MX285
02-17	TURBOLADERSYSTEEM, MX210 EN MX230
02-18	TURBOLADERSYSTEEM, MX255 EN MX285
02-19	TURBOLADER, MX210 EN MX230
02-20	TURBOLADER, MX255 EN MX285
02-21	WASTEGATE-ACTUATOR, MX210 EN MX230
02-22	WASTEGATE-ACTUATOR, MX255 EN MX285
02-23	FILTER EN KOELER - OLIE, MX210 EN MX230
02-24	FILTER EN KOELER - OLIE, MX255 EN MX285
02-25	OLIEPOMP & CARTER
02-26	CILINDERKOP - DEKSEL, MX210 EN MX230, BSN JAZ132841
02-27	CILINDERKOP - DEKSEL, MX210 EN MX230, ASN JAZ132841
02-28	CILINDERKOP - DEKSEL, MX255 EN MX285
02-29	CILINDERKOP - KLEPMECHANISME, MX210 EN MX230
02-30	CILINDERKOP - KLEPMECHANISME, MX255 EN MX285
02-31	THERMOSTAAT - FILTER, WATER
02-32	CARTER, ONTLUCHTINGSDOP, MX210 EN MX230, BSN JAZ132841
02-33	CARTER, ONTLUCHTINGSDOP, MX255 EN MX285
02-34	NOKKENAS, MX210 EN MX230
02-35	NOKKENAS, MX255 EN MX285
02-36	CILINDERBLOK, MX210 EN MX230
02-37	CILINDERBLOK, MX255 EN MX285
02-38	MOTORREVISIE-SET, MX210 EN MX230
02-39	MOTORREVISIE-SET, MX255 EN MX285
02-40	KRUKAS
02-41	VLIEGWIEL
02-42	ZUIGERS - STANGVERBINDINGEN, MX210 EN MX230
02-43	ZUIGERS - STANGVERBINDINGEN, MX255 EN MX285
02-44	PAKKINGSET - KLEP SLIJPEN, MX210 EN MX230
02-45	PAKKINGSET - KLEP SLIJPEN, MX255 EN MX285
02-46	PAKKINGSET - CILINDERBLOK, MX210 EN MX230
02-47	PAKKINGSET - CILINDERBLOK, MX255 EN MX285
02-48	PAKKINGSET - BASISMOTORONDERHOUD, MX210 EN MX230
02-49	PAKKINGSET - BASISMOTORONDERHOUD, MX255 EN MX285
03-01	BRANDSTOFINJECTIESYSTEEM, MX210 EN MX230
03-02	BRANDSTOFINJECTIESYSTEEM, MX255 EN MX285

INHOUDSOPGAVE

03-03	ANEROÏDE EN WASTEGATE SYSTEEM, MX210 EN MX230
03-04	BRANDSTOFFILTER - POMP, OPVOER, MX210 EN MX230
03-05	POMP, BRANDSTOFOPVOER-, MX255 EN MX285
03-06	BRANDSTOFFILTER EN AANSLUITINGEN, MX255 EN MX285
03-07	BRANDSTOFINSPUITING - POMP EN AANDRIJVING, MX210 EN MX230
03-08	BRANDSTOFINJECTIEPOMP, MX255 EN MX285
03-09	BRANDSTOFINJECTIEPOMP, MX255 EN MX285
03-10	BRANDSTOFINJECTIEPOMP, MX255 EN MX285
03-11	BRANDSTOFINJECTIEPOMP, MX255 EN MX285
03-12	BRANDSTOFINJECTIEPOMP, MX255 EN MX285
03-13	BRANDSTOFINJECTIEPOMP - TANDWIEL EN MONTAGEBEUGELS, MX255 EN MX285
03-14	BRANDSTOFINSPUITING - SPUITMOND, MX210 EN MX230
03-15	BRANDSTOFINSPUITING - SPUITMOND , MX255 EN MX285
03-16	HANDGAS, MX210 EN MX230
03-17	HANDGAS, MX255 EN MX285
03-18	GASPEDAAL, MX210 EN MX230
03-19	GASPEDAAL, MX255 EN MX285
03-20	BRANDSTOFTANKS
03-21	BRANDSTOFLEIDING MET LEIDINGFILTER, MX210 EN MX230
03-22	BRANDSTOFLEIDING MET SCHEIDINGSFILTER, MX210 EN MX230
03-23	BRANDSTOFLEIDING MET LEIDINGFILTER, MX255 EN MX285
03-24	BRANDSTOFLEIDING MET SCHEIDINGSFILTER, MX255 EN MX285
03-25	BRANDSTOFSCHEIDINGSFILTER
04-01	BEDRADING - MOTOR, MX210 EN MX230
04-02	BEDRADING - MOTOR, MX255 EN MX285
04-03	STROOMVERDELING
04-04	MODULE, REGELSYSTEEM MOTOR, MX255 EN MX285
04-05	BEDRADING - CHASSIS
04-06	BEDRADING - EXTERNE HYDRAULISCHE KLEP
04-07	BEDRADING - CABINE
04-08	BEDRADING - CABINEDAK, PLANK EN CD-WISSELAAR
04-09	BEDRADING - BEWEEGBAAR OPGEHANGEN AS
04-10	MONTAGE ELEKTRISCH ONDERDEEL
04-11	MONTAGE ELEKTRISCH ONDERDEEL - ZEKERINGEN
04-12	KAP A-STIJL - INSTRUMENTENPANEEL
04-13	BEDIENINGSORGANEN - VOORPANEEL
04-14	BEDIENINGSORGANEN, RECHTER PANEEL
04-15	BEDIENINGSORGANEN - RECHTER SPATBORDPANEEL, ZONDER ATC
04-16	BEDIENINGSORGANEN - RECHTER SPATBORDPANEEL, MET ATC
04-17	DYNAMO - BEVESTIGING
04-18	DYNAMO - 135 AMPÈRE
04-19	STARTMOTOR - BEVESTIGING
04-20	STARTMOTOR
04-21	SOLENOÏDE - STARTMOTOR
04-22	ACCU, ACCUBAK EN KABELS
04-23	RUITENWISSERS - VOOR EN ACHTER
04-24	RUITENSPROEIER VOOR EN ACHTER
04-25	KOPLAMPEN
04-26	KOPLAMPEN - EXTRA
04-27	BEDRADING EN MONITOR ISO 11783
04-28	LICHTEN- VOOR- EN SCHIJNWERPER-

INHOUDSOPGAVE

04-29	LICHTEN - CABINEDAK
04-30	LICHTEN - ACHTERSPATBORD EN EXTERNE HEFSCHAKELAAR
04-31	SCHIJNWERPERS - DAK EN ACHTERSPATBORDEN
04-32	LAMP - ZWAAILICHT
04-33	RADIO"S, LUIDSPREKERS EN ANTENNES
04-34	STUURWIEL EN -KOLOM
04-35	STUURKOLOM
05-01	STUURWIEL EN -KOLOM
05-02	STUURKOLOM
05-03	STUURINRICHTING - MFD, BSN JAZ126070
05-04	STUURINRICHTING - MFD, ASN JAZ126070
05-05	HYDRAULISCH SYSTEEM - DIFFERENTIEELVERGRENDELING MFD
05-06	HYDRAULISCH SYSTEEM - BEWEEGBAAR OPGEHANGEN AS
05-07	KLEP ASSEMBLAGE- OPGEHANGEN MFD-AS
05-08	VOORAS - MONTAGE, MFD
05-09	VOORAS - OPHANGING, BEWEEGBAAR OPGEHANGEN MFD
05-10	MFD-ASBEHUIZING - STANDAARD MET NAAF MET 10 BOUTEN, ZONDER DIFFERENTIEELVERGRENDELING
05-11	MFD-ASBEHUIZING - STANDAARD MET NAAF MET 10 BOUTEN, MET DIFFERENTIEELVERGRENDELING
05-12	MFD-ASBEHUIZING - STANDAARD MET NAAF MET 12 BOUTEN, MET DIFFERENTIEELVERGRENDELING
05-13	MFD-ASBEHUIZING - BEWEEGBAAR OPGEHANGEN MET NAAF MET 10 BOUTEN , ZONDER DIFFERENTIEELVERGRENDELING
05-14	MFD-ASBEHUIZING - BEWEEGBAAR OPGEHANGEN MET NAAF MET 10 BOUTEN , MET DIFFERENTIEELVERGRENDELING
05-15	MFD-ASBEHUIZING - BEWEEGBAAR OPGEHANGEN MET NAAF MET 12 BOUTEN , MET DIFFERENTIEELVERGRENDELING
05-16	AANDRIJFAS VOORAS - MFD, ZONDER DIFFERENTIEELVERGRENDELING
05-17	AANDRIJFAS VOORAS - MFD, MET DIFFERENTIEELVERGRENDELING
05-18	STEUNRING EN DIFFERENTIEEL - MFD, NAAF MET 10 BOUTEN , ZONDER DIFFERENTIEELVERGRENDELING
05-19	STEUNRING EN DIFFERENTIEEL - MFD, NAAF MET 10 BOUTEN, MET DIFFERENTIEELVERGRENDELING
05-20	STEUNRING EN DIFFERENTIEEL - MFD, NAAF MET 12 BOUTEN, MET DIFFERENTIEELVERGRENDELING
05-21	VOORAS, PLANETAIR EN NAAF - MFD, NAAF MET 10 BOUTEN
05-22	VOORAS, PLANETAIR EN NAAF - MFD, NAAF MET 12 BOUTEN
05-23	STUURCILINDER - MFD, NAAF MET 10 BOUTEN
05-24	STUURCILINDER - MFD, NAAF MET 12 BOUTEN
05-25	VOORWIELEN - MFD, NAAF MET 10 BOUTEN
05-26	VOORWIELEN - MFD, NAAF MET 12 BOUTEN
05-27	AFSTANDHOUDER - DUBBELE VOORWIELEN
06-01	AANDRIJFAS TRANSMISSIE
06-02	HEFBAK TRANSMISSIE
06-03	VERSNELLINGSTRANSMISSIE - BEHUIZING, BSN AJB0355338
06-04	VERSNELLINGSTRANSMISSIE - BEHUIZING, BTW AJB0355338 & AJB0355923
06-05	VERSNELLINGSTRANSMISSIE - BEHUIZING, ASN AJB0355923
06-06	PLAATCONSTRUCTIE - KLEPMONTAGE, LINKERKANT
06-07	PLAATCONSTRUCTIE - KLEPBEVESTIGING
06-08	VERSNELLINGSTRANSMISSIE - INVOERAS ZONDER KRUIPVERSNELLING

INHOUDSOPGAVE

06-09	VERSNELLINGSTRANSMISSIE - INVOERAS MET KRUIPVERSNELLING
06-10	VERSNELLINGSTRANSMISSIE - SECUNDAIRE AS ZONDER KRUIPVERSNELLING
06-11	VERSNELLINGSTRANSMISSIE - SECUNDAIRE AS MET KRUIPVERSNELLING
06-12	VERSNELLINGSTRANSMISSIE - KOPPELING UITVOERAS VOOR
06-13	VERSNELLINGSTRANSMISSIE - KOPPELING UITVOERAS ACHTER
06-14	GROEPSTRANSMISSIE - BEHUIZING, BSN AJB0355338
06-15	GROEPSTRANSMISSIE - BEHUIZING, BTW AJB0355338 & AJB0355923
06-16	GROEPSTRANSMISSIE - BEHUIZING, ASN AJB0355923
06-17	KLEPCONSTRUCTIE - INCHING
06-18	GROEPSTRANSMISSIE - INVOERAS
06-19	GROEPSTRANSMISSIE - HOOFDKOPPELING
06-20	GROEPSTRANSMISSIE - SECUNDAIRE AS
06-21	TRANSMISSIE - PIGNONAS EN TANDWIELEN
06-22	TRANSMISSIE - DIFFERENTIEEL
06-23	GROEPSTRANSMISSIE - MFD-KOPPELING
06-24	MFD-AS - AANDRIJFAS
06-25	LOKATIE TRANSMISSIEREGELKLEP
06-26	KLEPCONSTRUCTIE - TRANSMISSIEBEDIENING (450729A2)
06-27	KLEPCONSTRUCTIE - TRANSMISSIEBEDIENING (450721A2)
06-28	KLEPCONSTRUCTIE - TRANSMISSIEBEDIENING (450726A2)
06-29	KLEPCONSTRUCTIE - TRANSMISSIEBEDIENING (450728A2)
06-30	PEDAAL - INCHING
06-31	HENDEL - TRANSMISSIEBEDIENING
06-32	ACHTERAS - BEHUIZING
06-33	BELUCHTER - TRANSMISSIE
06-34	ACHTERAS - PLANETAIR, MX210, MX230 EN MX255
06-35	ACHTERAS - PLANETAIR, MX285
06-36	ACHTERAS - 4 X 98 INCH, MX210 EN MX230
06-37	ACHTERAS - 4 X 98 IN., MX255 EN MX285
06-38	TRANSMISSIE - POMPAANDRIJVING
06-39	AFTAKAS - AANDRIJFAS, BSN AJB0355026
06-40	AFTAKAS - AANDRIJFAS, ASN AJB0355026
06-41	AFTAKAS - REDUCTIETANDWIEL, TWEE VERSNELLINGEN
06-42	AFTAKAS CONSTRUCTIE - UITVOERAS, TWEE VERSNELLINGEN
06-43	AFTAKAS - UITVOERAS, ENKELE VERSNELLING, BSN AJB0355026
06-44	AFTAKAS - UITVOERAS, ENKELE VERSNELLING - ASN AJB0355026
06-45	AFTAKAS - SCHERMEN
06-46	MASSIEF STALEN ACHTERWIELEN
06-47	NAAF - ACHTERWIEL
06-48	AFSTANDHOUDER - DUBBELE ACHTERWIELEN
06-49	ACHTERWIELGEWICHTEN
07-01	REMMEN - PEDAALREM
07-02	REMMEN - HYDRAULISCH SYSTEEM, ZONDER OPLEGGERREMMEN
07-03	REMMEN - HYDRAULISCH SYSTEEM, MET HYDRAULISCHE OPLEGGERREMMEN
07-04	REMMEN - HYDRAULISCH SYSTEEM, MET PNEUMATISCHE OPLEGGERREMMEN
07-05	REMMEN - REGELKLEP
07-06	REMMEN - DIFFERENTIEEL
07-07	PARKEER- EN NOODREM - HENDEL EN OVERBRENGING
07-08	PARKEER- EN NOODREM - HYDRAULISCH SYSTEEM
07-09	PARKEER- EN NOODREM - KLEPCONSTRUCTIE
07-10	PARKEER- EN NOODREM - REMCONSTRUCTIE

INHOUDSOPGAVE

07-11	PARKEERREM - VRIJZETTEN, BSN AJB0355923
07-12	PARKEERREM - VRIJZETTEN, ASN AJB0355923
07-13	OPLEGGERREMMEN - HYDRAULISCH, BEHALVE ITALI
07-14	OPLEGGERREMMEN - HYDRAULISCH, UITSLUITEND ITALI
07-15	OPLEGGERREMMEN - PNEUMATISCHE, BEVESTIGING EN AANDRIJVING LUCHTCOMPRESSOR
07-16	OPLEGGERREMMEN - PNEUMATISCH, RESERVOIR, BEHALVE ITALI
07-17	OPLEGGERREMMEN - PNEUMATISCH, RESERVOIR, UITSLUITEND ITALI
07-18	OPLEGGERREMMEN - PNEUMATISCH, KLEPPEN
07-19	OPLEGGERREMMEN - PNEUMATISCH, KOPPELINGEN, BEHALVE ITALI
07-20	OPLEGGERREMMEN, PNEUMATISCH, KOPPELINGEN, UITSLUITEND ITALI
08-01	HYDRAULISCH SYSTEEM - OLIEKOELER
08-02	HYDRAULISCH SYSTEEM - 3E OLIEKOELER
08-03	HYDRAULISCH SYSTEEM - LAADPOMP
08-04	HYDRAULISCH SYSTEEM - ZUIGERPOMP EN FILTER, STANDAARD-DEBIETCAPACITEIT
08-05	HYDRAULISCH SYSTEEM - ZUIGERPOMP EN FILTER, HOGE DEBIETCAPACITEIT
08-06	HYDRAULISCH SYSTEEM - GEREGULEERDE DRUK
08-07	HYDRAULISCH SYSTEEM - KRUIPVERSNELLING
08-08	HYDRAULISCH SYSTEEM - SMERING TRANSMISSIE
08-09	HYDRAULISCH SYSTEEM - HEFINRICHTING
08-10	
08-11	HYDRAULISCH SYSTEEM - HEFINRICHTING VOOR
08-12	HYDRAULISCH SYSTEEM - VERGRENDELKLEP AFTAKAS/DIFFERENTIEEL
08-13	HYDRAULISCH SYSTEEM - EXTERNE KOPPELSTUKKEN
08-14	HYDRAULISCH SYSTEEM - AFTAKASVERMOGEN
08-15	HYDRAULISCH SYSTEEM - MOTORRETOUR
08-16	VOORKEURS- EN REGULATEURKLEPCONSTRUCTIE
08-17	VERGRENDELKLEPCONSTRUCTIE VOOR AFTAKAS EN DIFFERENTIEEL
08-18	KLEPPENREK EXTERNE HYDRAULICA
08-19	KLEPCONSTRUCTIE VERDEELSTUK
08-20	REGELKLEP EXTERNE HYDRAULICA
08-21	KLEPCONSTRUCTIE HEFINRICHTING
08-22	BEVESTIGINGSSTUK KOPPELSTUK EXTERNE HYDRAULICA
08-23	KOPPELSTUKKEN EXTERNE HYDRAULICA
08-24	CILINDERCONSTRUCTIE - HEFINRICHTING (305022A2)
08-25	CILINDERCONSTRUCTIE - HEFINRICHTING (278277A3)
08-26	CILINDERCONSTRUCTIE - HEFINRICHTING (278419A3)
08-27	AFTAKASVERMOGEN KLEPCONSTRUCTIE
09-01	VOOR-FRAME
09-02	TREKGAFFEL VOOR
09-03	FRONTGEWICHTEN
09-04	FRONTGEWICHTEN
09-05	HEFINRICHTING VOOR
09-06	SPATBORDEN - VOORZIJDE, SMAL
09-07	SPATBORDEN - VOORZIJDE, BREED
09-08	SPATBORDEN, ACHTER
09-09	SPATBORDEN, ACHTER, EXTRA BREED
09-10	KANTELING MOTORKAP
09-11	VENTILATORSCHERMEN
09-12	MOTORKAP VAST

INHOUDSOPGAVE

09-13	CABINE - BEVESTIGING EN FRAME, BSN AJB0355923
09-14	CABINE - BEVESTIGING EN FRAME, ASN AJB0355923
09-15	CABINE - DAK
09-16	CABINE - AFWERKING BUITENZIJDE
09-17	CABINE - TREDES
09-18	FØRERHUS - FORRUDE TRIN
09-19	CABINE - PORTIER
09-20	CABINE - ACHTERRUIT
09-21	CABINE - VASTE BEGLAZING
09-22	SPIEGELS
09-23	CABINE - DAKBEKLEDING, STANDAARD-AFWERKING
09-24	CABINE - DAKBEKLEDING, DELUXE- EN LUXURY- AFWERKING
09-25	CABINE - VLOERMAT EN ISOLATIE
09-26	CABINE - AFWERKING, SPATBORDEN
09-27	CABINE - AFWERKING, CABINESTIJLEN
09-28	CABINE - INSTRUMENTENPANEEL
09-29	STOEL
09-30	KUSSENS - STOEL
09-31	VERING - STOEL
09-32	HALF ACTIEVE VERING - STOEL
09-33	STOEL - INSTRUCTIE-
09-34	PANEEL, RECHTS, STANDAARD-CABINE
09-35	PANEEL, RECHTS, DELUXE- EN LUXURY-CABINE
09-36	MONITORBEVESTIGING - CABINEDAK
09-37	MONITORBEVESTIGING - A-STIJL CABINE
09-38	AIRCONDITIONING - BEVESTIGING COMPRESSOR
09-39	AIRCONDITIONING - CONDENSOR
09-40	VERWARMINGSSYSTEEM
09-41	AIRCONDITIONING - KLIMAATBEHEERSINGSEENHEID, ZONDER AUTOM. TEMP.-REGELING
09-42	AIRCONDITIONING - KLIMAATBEHEERSINGSEENHEID, MET AUTOM. TEMP.-REGELING
09-43	AIRCONDITIONING - LUCHTFILTER
09-44	AIRCONDITIONING - LUCHTLEIDINGEN
09-45	CABINE - ISOLATIE
09-46	TREKSTANG EN HAMERBAND
09-47	TREKSTANG EN HAMERBAND - UITSLUITEND ITALI
09-48	HEFINRICHTING - STEUNEN EN TUIMELAS
09-49	HEFINRICHTING - TOPVERBINDINGSSTUK
09-50	HEFINRICHTING - HEFVERBINDINGSSTUKKEN
09-51	HEFINRICHTING - ONDERSTE HEFVERBINDINGSSTUKKEN
09-52	HEFINRICHTING - ZWENKBEGRENZER
09-53	HEFINRICHTING - STANDSENSOR
09-54	HEFINRICHTING - PENNEN TREKKRACHTREGELING
09-55	TREKHAAK OPLEGGER - HANDPEN, UITSLUITEND FRANKRIJK (CRAMER)
09-56	TREKHAAK OPLEGGER - HANDPEN, UITSLUITEND FRANKRIJK (CBM)
09-57	TREKHAAK OPLEGGER - AUTO-GAFFEL, UITSLUITEND DUITSLAND (CRAMER)
09-58	TREKHAAK OPLEGGER - AUTO-GAFFEL, 37 MM, UITSLUITEND DUITSLAND (CRAMER)
09-59	TREKHAAK OPLEGGER - AUTO-GAFFEL, 32 MM, UITSLUITEND DUITSLAND (CRAMER)

INHOUDSOPGAVE

09-60	TREKHAAK OPLEGGER - AUTO-GAFFEL, 38 MM, UITSLUITEND DUITSLAND (CBM)
09-61	TREKHAAK OPLEGGER - HANDPEN, UITSLUITEND ITALI (CBM)
09-62	STICKERS
09-63	STICKERS - STEYR
09-64	STICKERS

INHOLDSFORTEGNELSE

02-01	KØLER OG VENTILATORRING
02-02	KØLERSAMLING
02-03	AFLUFTNINGSSYSTEM
02-04	LUFTINDSUGNINGSSYSTEM - STANDARD
02-05	LUFTINDSUGNINGSSYSTEM - KRAFTIGT
02-06	EFTERKØLER
02-07	ÆTERSTARTSYSTEM
02-08	UDSTØDNINGSSYSTEM
02-09	MOTORMONTERING
02-10	SVINGHJULSSKÆRME
02-11	VANDPUMPESYSTEM, MX210 OG MX230
02-12	VANDPUMPESYSTEM, MX255 OG MX285
02-13	FORGEARSDÆKSEL, MX210 OG MX230
02-14	FORGEARSDÆKSEL, MX255 OG MX285
02-15	MANIFOLDS, MX210 OG MX230
02-16	MANIFOLDS, MX255 OG MX285
02-17	TURBOLADERSYSTEM, MX210 OG MX230
02-18	TURBOLADERSYSTEM, MX255 OG MX285
02-19	TURBOLADERSAMLING, MX210 OG MX230
02-20	TURBOLADERSAMLING, MX255 OG MX285
02-21	WASTEGATE-AKTUATOR, MX210 OG MX230
02-22	WASTEGATE-AKTUATOR, MX255 OG MX285
02-23	FILTER OG KØLEANORDNING - OLIE, MX210 OG MX230
02-24	FILTER OG KØLEANORDNING - OLIE, MX255 OG MX285
02-25	OLIEPUMPE OG BUNDKAR
02-26	TOPSTYKKE - DÆKSEL, MX210 OG MX230, BSN JAZ132841
02-27	TOPSTYKKE - DÆKSEL, MX210 OG MX230, ASN JAZ132841
02-28	TOPSTYKKE - DÆKSEL, MX255 OG MX285
02-29	TOPSTYKKE - VENTILMEKANISME, MX210 OG MX230
02-30	TOPSTYKKE - VENTILMEKANISME, MX255 OG MX285
02-31	TERMOSTAT - FILTER, VAND
02-32	KRUMTAPHUS, ÅNDERØR, MX210 OG MX230, BSN JAZ132841
02-33	KRUMTAPHUS, ÅNDERØR, MX255 OG MX285
02-34	KNASTAKSEL, MX210 OG MX230
02-35	KNASTAKSEL, MX255 OG MX285
02-36	CYLINDERBLOK, MX210 OG MX230
02-37	CYLINDERBLOK - MX255 OG MX285
02-38	SÆT MOTOREFTERSYN, MX210 OG MX230
02-39	SÆT MOTOREFTERSYN, MX255 OG MX285
02-40	KRUMTAPAKSEL
02-41	SVINGHJUL
02-42	STEMPLER - PLEJLSTÆNGER, MX210 OG MX230
02-43	STEMPLER - PLEJLSTÆNGER, MX255 OG MX285
02-44	PAKNINGSSÆT - VENTILSLIBNING, MX210 OG MX230
02-45	PAKNINGSSÆT - VENTILSLIBNING, MX255 OG MX285
02-46	PAKNINGSSÆT - CYLINDERBLOK, MX210 OG MX230
02-47	PAKNINGSSÆT - CYLINDERBLOK, MX255 OG MX285
02-48	PAKNINGSSÆT - GRUNDLÆGGENDE SERVICE AF MOTOR, MX210 OG MX230
02-49	PAKNINGSSÆT - GRUNDLÆGGENDE SERVICE AF MOTOR, MX255 OG MX285
03-01	BRÆNDSTOFINDSPRØJTNINGSSYSTEM, MX210 OG MX230
03-02	BRÆNDSTOFINDSPRØJTNINGSSYSTEM, MX255 OG MX285

INHOLDSFORTEGNELSE

03-03	ANEROID- OG WASTEGATESYSTEM, MX210 OG MX230
03-04	BRÆNDSTOFFILTER - PUMPE, OVERFØRSEL, MX210 OG MX230
03-05	PUMPE, BRÆNDSTOFOVERFØRSEL, MX255 OG MX285
03-06	BRÆNDSTOFFILTER OG FORBINDELSER, MX255 OG MX285
03-07	BRÆNDSTOFINDSPRØJTNING - PUMPE OG DREV, MX210 OG MX230
03-08	BRÆNDSTOFINDSPRØJTNINGSPUMPE, MX255 OG MX285
03-09	BRÆNDSTOFINDSPRØJTNINGSPUMPE, MX255 OG MX285
03-10	BRÆNDSTOFINDSPRØJTNINGSPUMPE, MX255 OG MX285
03-11	BRÆNDSTOFINDSPRØJTNINGSPUMPE, MX255 OG MX285
03-12	BRÆNDSTOFINDSPRØJTNINGSPUMPE, MX255 OG MX285
03-13	BRÆNDSTOFINDSPRØJTNINGSPUMPE - GEAR OG MONTERINGSBESLAG, MX255 OG MX285
03-14	BRÆNDSTOFINDSPRØJTNING - DYSE, MX210 OG MX230
03-15	BRÆNDSTOFINDSPRØJTNING - DYSE, MX255 OG MX285
03-16	HÅNDGASGREB, MX210 OG MX230
03-17	HÅNDGASGREB, MX255 OG MX285
03-18	FODGASGREB, MX210 OG MX230
03-19	FODGASGREB, MX255 OG MX285
03-20	BRÆNDSTOFTANKE
03-21	BRÆNDSTOFSLANGER MED INLINE-FILTER, MX210 OG MX230
03-22	BRÆNDSTOFSLANGER MED UDSKILLERFILTER, MX210 OG MX230
03-23	BRÆNDSTOFSLANGER MED INLINE-FILTER, MX255 OG MX285
03-24	BRÆNDSTOFSLANGER MED UDSKILLERFILTER, MX255 OG MX285
03-25	BRÆNDSTOFUDSKILLERFILTER
04-01	LEDNINGSNET - MOTOR, MX210 OG MX230
04-02	LEDNINGSNET - MOTOR, MX255 OG MX285
04-03	STRØMFORDELING
04-04	MODUL, MOTORSTYRING, MX255 OG MX285
04-05	LEDNINGSNET - CHASSIS
04-06	LEDNINGSNET - HYDRAULISK FJERNVENTIL
04-07	LEDNINGSNET - FØRERHUS
04-08	LEDNINGSNET - FØRERHUSTAG, HYLDE OG CD-SKIFTER
04-09	LEDNINGSNET - OPHÆNGT AKSEL
04-10	MONTERING AF ELEKTRISK KOMPONENT
04-11	MONTERING AF ELEKTRISK KOMPONENT - SIKRINGER
04-12	A-STOLPEDÆKSEL - INSTRUMENTGRUPPE
04-13	BETJENINGSGREB - FRONTKONSOL
04-14	BETJENINGSGREB, HØJRE KONSOL
04-15	BETJENINGSGREB - HØJRE SKÆRMKONSOL, UDEN ATC
04-16	BETJENINGSGREB - HØJRE SKÆRMKONSOL, MED ATC
04-17	GENERATOR - MONTERING
04-18	GENERATORSAMLING - 135 AMPERE
04-19	STARTER - OPHÆNG
04-20	STARTERSAMLING
04-21	SOLENOIDE - STARTER
04-22	BATTERI, BATTERIKASSE OG KABLER
04-23	FORRUDEVISKERSAMLING - FOR OG BAG
04-24	FORRUDEVASKER FOR OG BAG
04-25	FORLYGTER
04-26	FORLYGTER - HJÆLPE-
04-27	ISO 11783 LEDNINGSNET OG MONITOR

INHOLDSFORTEGNELSE

04-28	LYGTER - FRONTPOSITION OG ARBEJDE
04-29	LYGTER - FØRERHUSTAG
04-30	LYGTER - BAGSKÆRM OG FJERNTRÆKKONTAKT
04-31	ARBEJDSLYGTER - TAG OG BAGSKÆRME
04-32	LYGTE - BLINK
04-33	RADIOER, HØJTTALERE OG ANTENNER
04-34	RAT OG RATSTAMME
04-35	RATSTAMMESAMLING
05-01	RAT OG RATSTAMME
05-02	RATSTAMMESAMLING
05-03	STYRESYSTEM - MFD, BSN JAZ126070
05-04	STYRESYSTEM - MFD, ASN JAZ126070
05-05	HYDRAULIKSYSTEM - MFD DIFFERENTIALESPÆRRE
05-06	HYDRAULIKSYSTEM - OPHÆNGT AKSEL
05-07	VENTILSAMLING - AFFJEDRET MFT-AKSEL
05-08	FORAKSEL - OPHÆNG, MFD
05-09	FORAKSEL - OPHÆNG, OPHÆNGT MFD
05-10	MFD AKSELHUSSAMLING - STANDARD MED 10 BOLTNAV, UDEN DIFFERENTIALESPÆRRE
05-11	MFD AKSELHUSSAMLING - STANDARD MED 10 BOLTNAV, MED DIFFERENTIALESPÆRRE
05-12	MFD AKSELHUSSAMLING - STANDARD MED 12 BOLTNAV, MED DIFFERENTIALESPÆRRE
05-13	MFD AKSELHUSSAMLING - OPHÆNGT MED 10 BOLTNAV, UDEN DIFFERENTIALESPÆRRE
05-14	MFD AKSELHUSSAMLING - OPHÆNGT MED 10 BOLTNAV, MED DIFFERENTIALESPÆRRE
05-15	MFD AKSELHUSSAMLING - OPHÆNGT MED 12 BOLTNAV, MED DIFFERENTIALESPÆRRE
05-16	FORRESTE DRIVAKSEL - MFD, UDEN DIFFERENTIALESPÆRRE
05-17	FORRESTE DRIVAKSEL - MFD, MED DIFFERENTIALESPÆRRE
05-18	BÆRER OG DIFFERENTIALE - MFD, 10 BOLTNAV, UDEN DIFFERENTIALESPÆRRE
05-19	BÆRER OG DIFFERENTIALE - MFD, 10 BOLTNAV, MED DIFFERENTIALESPÆRRE
05-20	BÆRER OG DIFFERENTIALE - MFD, 12 BOLTNAV, MED DIFFERENTIALESPÆRRE
05-21	FORAKSEL PLANETGEAR OG NAV - MFD, 10 BOLTNAV
05-22	FORAKSEL PLANETGEAR OG NAV - MFD, 12 BOLTNAV
05-23	STYRECYLINDERSAMLING - MFD, 10 BOLTNAV
05-24	STYRECYLINDERSAMLING - MFD, 12 BOLTNAV
05-25	FORHJUL - MFD, 10 BOLTNAV
05-26	FORHJUL - MFD, 12 BOLTNAV
05-27	MELLEMSTYKKE - DOBBELTE FORHJUL
06-01	KARDANAKSEL
06-02	KARDANFALDKASSE
06-03	HASTIGHEDSOVERFØRSEL - HUS, BSN AJB0355338
06-04	HASTIGHEDSOVERFØRSEL - HUS, BTW AJB0355338 & AJB0355923
06-05	HASTIGHEDSOVERFØRSEL - HUS, ASN AJB0355923
06-06	PLADEENHED - VENTILOPHÆNG, VENSTRE SIDE
06-07	PLADESAMLING - VENTILMONTERING
06-08	HASTIGHEDSOVERFØRSEL - INDGANGSAKSEL UDEN KRYBEGEAR
06-09	HASTIGHEDSOVERFØRSEL - INDGANGSAKSEL MED KRYBEGEAR
06-10	HASTIGHEDSOVERFØRSEL - MELLEMAKSEL UDEN KRYBEGEAR

INHOLDSFORTEGNELSE

06-11	HASTIGHEDSOVERFØRSEL - MELLEMAKSEL MED KRYBEGEAR
06-12	HASTIGHEDSOVERFØRSEL - UDGANGSAKSLENS FORRESTE KOBLING
06-13	HASTIGHEDSOVERFØRSEL - UDGANGSAKSLENS BAGESTE KOBLING
06-14	OMRÅDETRANSMISSION - HUS, BSN AJB0355338
06-15	OMRÅDETRANSMISSION - HUS, BTW AJB0355338 & AJB0355923
06-16	OMRÅDETRANSMISSION - HUS, ASN AJB0355923
06-17	VENTILSAMLING - SKRIDTVIS INDSTILLING
06-18	OMRÅDETRANSMISSION - INDGANGSAKSEL
06-19	OMRÅDETRANSMISSION - HOVEDKOBLING
06-20	OMRÅDETRANSMISSION - MELLEMAKSEL
06-21	TRANSMISSION - DREVAKSEL OG GEAR
06-22	TRANSMISSION - DIFFERENTIALE
06-23	OMRÅDETRANSMISSION - MFD KOBLING
06-24	MFD AKSEL - DRIVAKSEL
06-25	TRANSMISSIONSSTYREVENTILENS PLACERING
06-26	VENTILSAMLING - TRANSMISSIONSSTYRING (450729A2)
06-27	VENTILSAMLING - TRANSMISSIONSSTYRING (450721A2)
06-28	VENTILSAMLING - TRANSMISSIONSSTYRING (450726A2)
06-29	VENTILSAMLING - TRANSMISSIONSSTYRING (450728A2)
06-30	PEDAL - SKRIDTVIS INDSTILLING
06-31	HÅNDGREBSSAMLING - TRANSMISSIONSSTYRING
06-32	BAGAKSEL - HUS
06-33	ÅNDERØR - TRANSMISSION
06-34	BAGAKSEL - PLANETGEAR, MX210, MX230 OG MX255
06-35	BAGAKSEL - PLANETGEAR, MX285
06-36	BAGAKSEL - 4 X 98 IN., MX210 OG MX230
06-37	BAGAKSEL - 4 X 98 IN., MX255 OG MX285
06-38	TRANSMISSION - PUMPEDREV
06-39	KRAFTOVERFØRINGSSAMLING - INDGANGSAKSEL, BSN AJB0355026
06-40	KRAFTOVERFØRINGSSAMLING - INDGANGSAKSEL, ASN AJB0355026
06-41	CONJUNTO DE LA TOMA DE FUERZA - EJE DE ENTRADA
06-42	KRAFTOVERFØRINGSSAMLING - UDGANGSAKSEL, DOBBELT HASTIGHED
06-43	KRAFTOVERFØRINGSSAMLING - UDGANGSAKSEL, EN HASTIGHED, BSN AJB0355026
06-44	KRAFTOVERFØRINGSSAMLING - UDGANGSAKSEL, EN HASTIGHED - ASN AJB0355026
06-45	KRAFTOVERFØRINGSSAMLING - SKÆRME
06-46	BAGHJUL AF MASSIVT STÅL
06-47	NAVSAMLING - BAGHJUL
06-48	MELLEMSTYKKE - DOBBELTE BAGHJUL
06-49	BAGHJULSVÆGTE
07-01	BREMSER - PEDALBREMSE
07-02	BREMSER - HYDRAULIKSYSTEM, UDEN ANHÆNGERBREMSER
07-03	BREMSER - HYDRAULIKSYSTEM, MED HYDRAULISKE ANHÆNGERBREMSER
07-04	BREMSER - HYDRAULIKSYSTEM, MED TRYKLUFTSBREMSER PÅ ANHÆNGER
07-05	BREMSER - STYREVENTIL
07-06	BREMSER - DIFFERENTIALE
07-07	PARKERINGS- OG NØDBREMSE - BETJENINGSGREB OG FORBINDELSE
07-08	PARKERINGS- OG NØDBREMSE - HYDRAULISK SYSTEM
07-09	PARKERINGS- OG NØDBREMSE - VENTILSAMLING
07-10	PARKERINGS- OG NØDBREMSE - BREMSESAMLING

INHOLDSFORTEGNELSE

07-11	PARKERINGSBREMSE - SLIP, BSN AJB0355923
07-12	PARKERINGSBREMSE - SLIP, BSN AJB0355923
07-13	ANHÆNGERBREMSER - HYDRAULISKE, UNDTAGEN ITALIEN
07-14	ANHÆNGERBREMSER - HYDAULISKE, KUN ITALIEN
07-15	ANHÆNGERBREMSER - TRYKLUFT, KOMPRESSORMONTERING OG DREV
07-16	ANHÆNGERBREMSER - TRYKLUFT, BEHOLDER, UNDTAGEN ITALIEN
07-17	ANHÆNGERBREMSER - TRYKLUFT, BEHOLDER, KUN ITALIEN
07-18	ANHÆNGERBREMSER - TRYKLUFT, VENTILER
07-19	ANHÆNGERBREMSER - TRYKLUFT, KOBLINGSANORDNINGER, UNDTAGEN ITALIEN
07-20	ANHÆNGERBREMSER - TRYKLUFT, KOBLINGSANORDNINGER, KUN ITALIEN
08-01	HYDRAULIKSYSTEM - OLIEKØLER
08-02	HYDRAULIKSYSTEM - 3. OLIEKØLER
08-03	HYDRAULIKSYSTEM - FØDEPUMPE
08-04	HYDRAULIKSYSTEM - STEMPELPUMPE OG FILTER, STANDARD GENNEMSTRØMNINGSKAPACITET
08-05	HYDRAULIKSYSTEM - STEMPELPUMPE OG FILTER, HØJ GENNEMSTRØMNINGSKAPACITET
08-06	HYDRAULIKSYSTEM - REGULERET TRYK
08-07	HYDRAULIKSYSTEM - KRYBEHASTIGHED
08-08	HYDRAULIKSYSTEM - TRANSMISSIONSSMØRING
08-09	HYDRAULIK SYSTEM - TRÆK
08-10	
08-11	HYDRAULIKSYSTEM - FRONTTRÆK
08-12	HYDRAULIKSYSTEM - PTO/DIFFERENTIALESPÆRREVENTIL
08-13	HYDRAULIKSYSTEM - FJERNKOBLINGSANORDNINGER
08-14	HYDRAULIKSYSTEM - KRAFTOMLØB
08-15	HYDRAULIKSYSTEM - MOTOR RETUR
08-16	PRIORITETS- OG STYREVENTILSAMLING
08-17	PTO OG DIFFERENTIALESPÆRREVENTILSAMLING
08-18	HYDRAULISK FJERNVENTILSTAK
08-19	MANIFOLD VENTILSAMLING
08-20	HYDRAULISK FJERNSTYREVENTIL
08-21	TRÆKVENTILSAMLING
08-22	EKSTERN HYDRAULIKKOBLINGSMONTAGE
08-23	HYDRAULISKE FJERNSAMMENKOBLINGER
08-24	CYLINDERSAMLING - TRÆK (305022A2)
08-25	CYLINDERSAMLING - TRÆK (278277A3)
08-26	CYLINDERSAMLING - TRÆK (278419A3)
08-27	SEPARAT DREVET VENTIL
09-01	FORRESTE RAMME
09-02	FORRESTE TRÆKBØJLE
09-03	FORVÆGTE
09-04	FORVÆGTE
09-05	OPHÆNG FORTIL
09-06	SKÆRME - FOR, SMALLE
09-07	SKÆRME - FOR, BREDE
09-08	SKÆRME - BAGESTE
09-09	SKÆRME - BAG, EKSTRABREDE
09-10	VIPNING AF KØLERHJELM
09-11	VENTILATORSKÆRME
09-12	MOTORHJELM FASTGJORT

INHOLDSFORTEGNELSE

09-13	FØRERHUS - OPHÆNG OG CHASSISRAMME, BSN AJB0355923
09-14	FØRERHUS - OPHÆNG OG CHASSISRAMME, ASN AJB0355923
09-15	FØRERHUS - TAG
09-16	FØRERHUS - UDVENDIG PYNTELISTE
09-17	FØRERHUS - TRIN
09-18	FØRERHUS - FORRUDE TRIN
09-19	FØRERHUS - DØR
09-20	FØRERHUS - BAGRUDE
09-21	FØRERHUS - FASTMONTERET GLAS
09-22	SPEJLE
09-23	FØRERHUS - LOFTSBETRÆK, STANDARD PYNTELISTE
09-24	FØRERHUS - LOFTSBETRÆK, DELUXE OG LUKSUS PYNTELISTE
09-25	FØRERHUS - GULVMÅTTE OG ISOLERING
09-26	FØRERHUS - PYNTELISTE, SKÆRME
09-27	FØRERHUS - PYNTELISTE, FØRERHUSSTOLPER
09-28	FØRERHUS - INSTRUMENTPANEL
09-29	SÆDESAMLING
09-30	PUDESAMLING - SÆDE
09-31	OPHÆNGSSAMLING - SÆDE
09-32	SEMIAKTIV OPHÆNGSSAMLING - SÆDE
09-33	SÆDE - VEJLEDNING
09-34	KONSOL, HØJRE, STANDARD FØRERHUS
09-35	KONSOL, HØJRE, DELUXE OG LUKSUS FØRERHUS
09-36	KONTROLLER MONTERING - FØRERHUSTAG
09-37	KONTROLLER MONTERING - FØRERHUS A STOLPE
09-38	AIRCONDITION - MONTERING AF KOMPRESSOR
09-39	AIRCONDITIONER - KONDENSATOR
09-40	VARMESYSTEM
09-41	AIRCONDITION - KLIMAKONTROLENHED, UDEN AUTOMATISK TEMPERATURSTYRING
09-42	AIRCONDITION - KLIMAKONTROLENHED, MED AUTOMATISK TEMPERATURSTYRING
09-43	AIRCONDITION - LUFTFILTER
09-44	AIRCONDITION - KANALER
09-45	FØRERHUS - ISOLERING
09-46	TRÆKSTANG OG HAMMERREM
09-47	TRÆKSTANG OG HAMMERREM - KUN ITALIEN
09-48	TRÆK - STØTTE OG VIPPEARMSAKSEL
09-49	TRÆK - TOPSTANG
09-50	TRÆK - ØVERSTE LØFTEFORBINDELSER
09-51	TRÆK - NEDERSTE LØFTEFORBINDELSER
09-52	TRÆK - SVAJEBEGRÆNSER
09-53	TRÆK - POSITIONSFØLER
09-54	TRÆK - BETJENINGSSPLITTER TIL KROGENS TRÆK
09-55	ANHÆNGERTRÆK - MANUEL SPLIT, KUN FRANKRIG (CRAMER)
09-56	ANHÆNGERTRÆK - MANUEL SPLIT, KUN FRANKRIG (CBM)
09-57	ANHÆNGERTRÆK - MANUEL TRÆKBØJLE, KUN TYSKLAND (CRAMER)
09-58	ANHÆNGERTRÆK - MANUEL TRÆKBØJLE, 37 MM, KUN TYSKLAND (CRAMER)
09-59	ANHÆNGERTRÆK - MANUEL TRÆKBØJLE, 32 MM, KUN TYSKLAND (CRAMER)
09-60	ANHÆNGERTRÆK - AUTOMATISK TRÆKBØJLE, 38 MM, KUN TYSKLAND (CBM)
09-61	ANHÆNGERTRÆK - MANUEL SPLIT, KUN ITALIEN (CBM)

INHOLDSFORTEGNELSE

09-62	MÆRKATER
09-63	MÆRKATER - STEYR
09-64	MÆRKATER

SECTION INDEX

02-01	RADIATOR AND FAN SHROUD
02-02	RADIATOR ASSEMBLY
02-03	DEAERATION SYSTEM
02-04	AIR INDUCTION SYSTEM - STANDARD DUTY
02-05	AIR INDUCTION SYSTEM - SEVERE DUTY
02-06	AFTERCOOLER
02-07	ETHER START SYSTEM
02-08	EXHAUST SYSTEM
02-09	ENGINE MOUNTING
02-10	FLYWHEEL SHIELDS
02-11	WATER PUMP SYSTEM, MX210 AND MX230
02-12	WATER PUMP SYSTEM, MX255 AND MX285
02-13	FRONT GEAR COVER, MX210 AND MX230
02-14	FRONT GEAR COVER, MX255 AND MX285
02-15	MANIFOLDS, MX210 AND MX230
02-16	MANIFOLDS, MX255 AND MX285
02-17	TURBOCHARGER SYSTEM, MX210 AND MX230
02-18	TURBOCHARGER SYSTEM, MX255 AND MX285
02-19	TURBOCHARGER ASSEMBLY, MX210 AND MX230
02-20	TURBOCHARGER ASSEMBLY, MX255 AND MX285
02-21	WASTEGATE ACTUATOR, MX210 AND MX230
02-22	WASTEGATE ACTUATOR, MX255 AND MX285
02-23	FILTER AND COOLER - OIL, MX210 AND MX230
02-24	FILTER AND COOLER - OIL, MX255 AND MX285
02-25	OIL PUMP AND OIL PAN
02-26	CYLINDER HEAD - COVER, MX210 AND MX230, BSN JAZ132841
02-27	CYLINDER HEAD - COVER, MX210 AND MX230, ASN JAZ132841
02-28	CYLINDER HEAD - COVER, MX255 AND MX285
02-29	CYLINDER HEAD - VALVE MECHANISM, MX210 AND MX230
02-30	CYLINDER HEAD - VALVE MECHANISM, MX255 AND MX285
02-31	THERMOSTAT - FILTER, WATER
02-32	CRANKCASE, BREATHER, MX210 AND MX230, BSN JAZ132841
02-33	CRANKCASE, BREATHER, MX255 AND MX285
02-34	CAMSHAFT, MX210 AND MX230
02-35	CAMSHAFT, MX255 AND MX285
02-36	CYLINDER BLOCK, MX210 AND MX230
02-37	CYLINDER BLOCK, MX255 AND MX285
02-38	KIT ENGINE OVERHAUL, MX210 AND MX230
02-39	KIT ENGINE OVERHAUL, MX255 AND MX285
02-40	CRANKSHAFT
02-41	FLYWHEEL
02-42	PISTONS - CONNECTING RODS, MX210 AND MX230
02-43	PISTONS - CONNECTING RODS, MX255 AND MX285
02-44	GASKET KIT - VALVE GRIND, MX210 AND MX230
02-45	GASKET KIT - VALVE GRIND, MX255 AND MX285
02-46	GASKET KIT - CYLINDER BLOCK, MX210 AND MX230
02-47	GASKET KIT - CYLINDER BLOCK, MX255 AND MX285
02-48	GASKET KIT - BASIC SERVICE ENGINE, MX210 AND MX230
02-49	GASKET KIT - BASIC SERVICE ENGINE, MX255 AND MX285

02-01		p1	07/03

RADIATOR AND FAN SHROUD
RADIATORE E PROTEZIONE DEL VENTILATORE
RADIATEUR ET DÉFLECTEUR DU VENTILATEUR
KÜHLER- UND LÜFTERVERKLEIDUNG

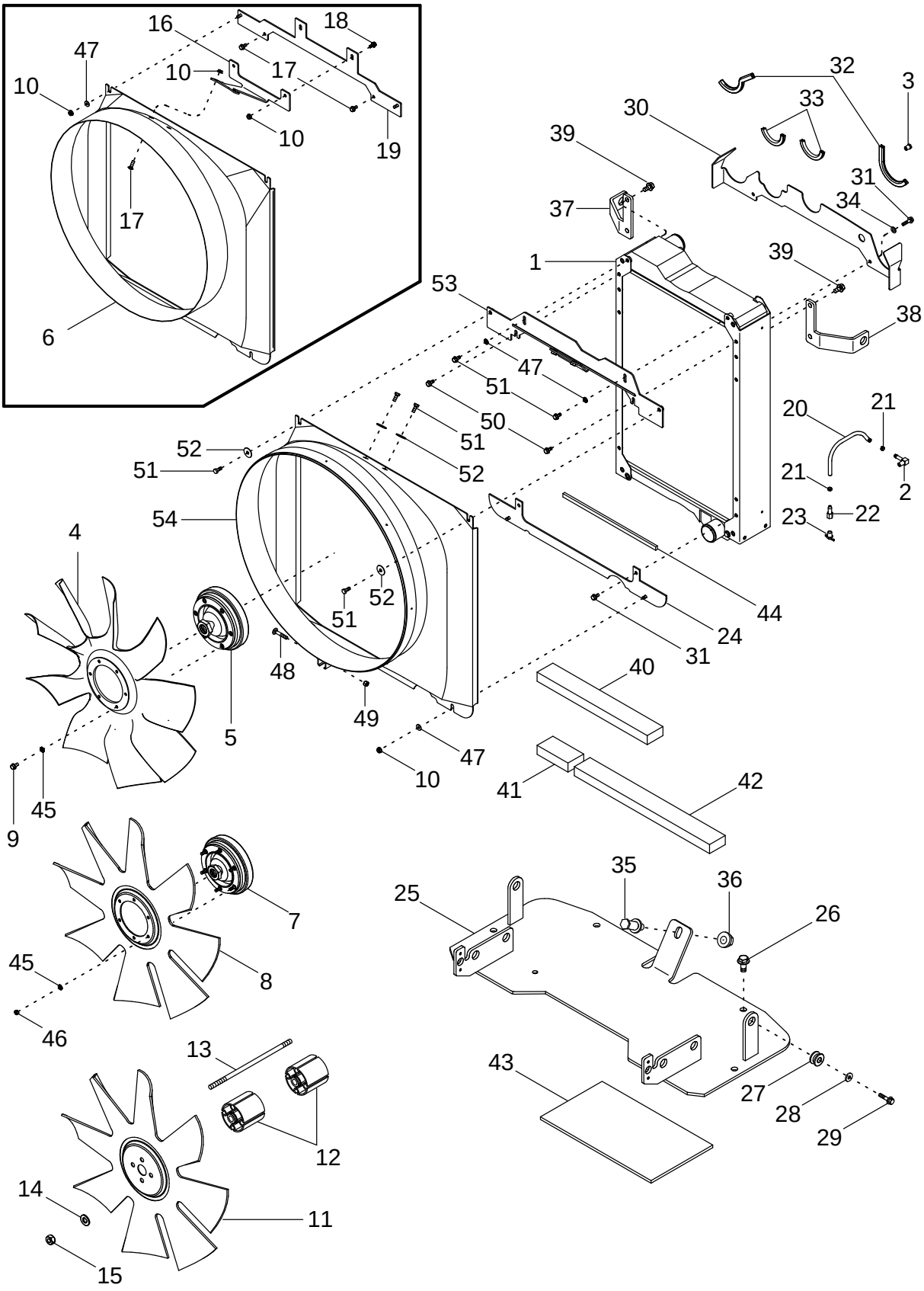

PROTECTOR DEL VENTILADOR Y RADIADOR
PROTECÇÃO DO RADIADOR E VENTOINHA
RADIATOR EN VENTILATORKAP
KØLER OG VENTILATORRING

R	N	P.N.	MOD	Q	Description Denominacion	Descrizione Denominação	Description Beschrijving	Bezeichnung Beskrivelse	L.C.
1	1	REF		1	INSTRUCTION Radiator Assy				
						ISTRUZIONI	NOTICE	HINWEIS	Z571
					MANUAL	INSTRUCAO	INSTRUCTION	SKO, INDRE	
2		217-132		1	ELBOW 3/8 stem x 1/4 PT	GOMITO	COUDE	KNIESTÜCK	085G
					CODO	JOELHO	ELLEBOOG	VINKELROER	
3		217-405		1	PLUG 1/4 PT	TAPPO	BOUCHON	STOPFEN	6400
					TAPÓN	BUJAO	PLUG	PROP	
4	2, 3	427509A1		1	FAN 9 Blade	VENTILATORE	VENTILATEUR	GEBLÄSE	030V
					VENTILADOR	VENTOINHA	VENTILATOR	VENTILATOR	
5	2, 3	447917A2		1	DRIVE ASSY. Viscous	COMANDO,COMPLESSI\	COMMANDE ENTR. ASS	ANTRIEB (KPLT.)	P595
					APARATO MOTRIZ	IMPULSOR CONJUNTO	DRIVE ASSY.	DRIVE ASSY.	
6	4	NSS		1	NOT SERVICED SEPARATELY SHROUD (If Equipped)				
						NON FORNITO SEPARAT	NON FOURNI SEPAREMI	KEIN ERSATZTEIL	064N
					NO SE REPARA SEPARA	NOT SERVICED SEPARA	NIET ALLEEN VERKRIJG	NOT SERVICED SEPARA	
7	5, 6	447916A1		1	DRIVE ASSY. Viscous	COMANDO,COMPLESSI\	COMMANDE ENTR. ASS	ANTRIEB (KPLT.)	P595
					APARATO MOTRIZ	IMPULSOR CONJUNTO	DRIVE ASSY.	DRIVE ASSY.	
8	5, 6	278432A1		1	FAN 8 Blade	VENTILATORE	VENTILATEUR	GEBLÄSE	030V
					VENTILADOR	VENTOINHA	VENTILATOR	VENTILATOR	
9	2, 3	844-8016		6	SCREW M8 x 16; 8.8	VITE	VIS	SCHRAUBE	7450
					TORNILLO	PARAFUSO	SCHROEF	SKRUE	
10		825-2408		8	NUT M8	DADO	ECROU	MUTTER	5780
					TUERCA	PORCA	MOER	MØTRIK	
11	7	353083A1		1	FAN 8 Blade (If Equipped)	VENTILATORE	VENTILATEUR	LÜFTER	3140
					VENTILADOR	VENTOINHA	VENTILATOR	VENTILATOR	
12	7	A184547		2	SPACER Fan	DISTANZIALE	ENTRETOISE	DISTANZSTÜCK	075D
					SEPARADOR	ESPACADOR	AFSTANDSRING	AFSTANDSSTYKKE	
13	7	360195A3		4	THREADED ROD M10 x 170 mm				
						ASTA FILETTATA	TIGE FILETÉE	GEWINDESTANGE	Z645
					VARILLA ROSCADA	HASTE ROSCADA	SCHROEFSTANG	GEVINDSTANG	
14		895-15010		4	WASHER 11 x 24 x 2 mm	ROSETTA PIANA	RONDELLE	SCHEIBE	9720
					ARANDELA	ANILHA	SLUITRING	FLADSKIVE	
15		829-1410		4	NUT M10; 10.9	DADO	ECROU	MUTTER	5780
					TUERCA	PORCA	MOER	MØTRIK	
16	8	NSS		1	NOT SERVICED SEPARATELY BRACKET (If Equipped)				
						NON FORNITO SEPARAT	NON FOURNI SEPAREMI	KEIN ERSATZTEIL	064N
					NO SE REPARA SEPARA	NOT SERVICED SEPARA	NIET ALLEEN VERKRIJG	NOT SERVICED SEPARA	
17		811-8025		2	BOLT M8 x 25	BULLONE	BOULON	SCHAUBENBOLZEN	0810
					TORNILLO	PARAFUSO	BOUT	SKRUE	
18		844-8025		2	SCREW M8 x 25; 8.8	VITE	VIS	SCHRAUBE	7450
					TORNILLO	PARAFUSO	SCHROEF	SKRUE	

(1) See Figure 02-02
(2) MX210
(3) MX230
(4) Order 87415556I Shroud REF 54
(5) MX255
(6) MX285
(7) With Optional Third Oil Cooler
(8) Order 87413766 REF 53

02-01		p2	07/03

RADIATOR AND FAN SHROUD
RADIATORE E PROTEZIONE DEL VENTILATORE
RADIATEUR ET DÉFLECTEUR DU VENTILATEUR
KÜHLER- UND LÜFTERVERKLEIDUNG

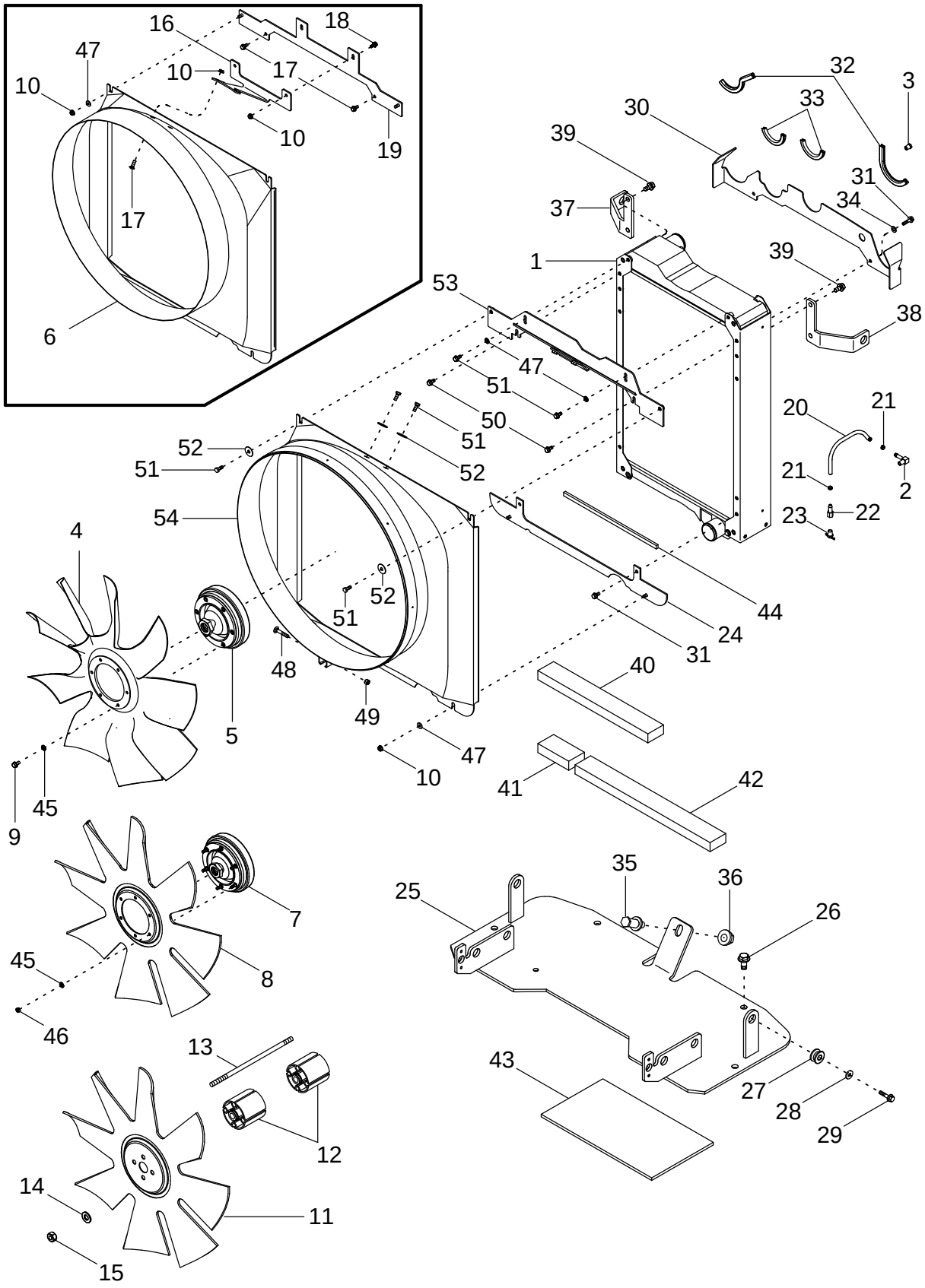

PROTECTOR DEL VENTILADOR Y RADIADOR
PROTECÇÃO DO RADIADOR E VENTOINHA
RADIATOR EN VENTILATORKAP
KØLER OG VENTILATORRING

R	N	P.N.	MOD	Q	Description Denominacion	Descrizione Denominação	Description Beschrijving	Bezeichnung Beskrivelse	L.C.
19	1	NSS		1	NOT SERVICED SEPARATELY BRACKET (If Equipped)				
						NON FORNITO SEPARAT	NON FOURNI SEPAREMI	KEIN ERSATZTEIL	064N
					NO SE REPARA SEPARA	NOT SERVICED SEPARA	NIET ALLEEN VERKRIJG	NOT SERVICED SEPARA	
20		242065A1		1	HOSE	MANICOTTO FLESSIBILE	FLEXIBLE	SCHLAUCHMUFFE	4480
					MANGA	TUBO FLEXIVEL	FLEXIBELE BUIS	SLANGE	
21		1348264C1		2	CLAMP, HOSE 3/8 ID	MORSETTO	BRIDE, FLEXIBLE	SCHLAUCHKLEMME	P729
					ABRAZADERA MANGUEI	BRACADEIRA MANGUEIF	CLAMP, HOSE	CLAMP, HOSE	
22		217-180		1	CONNECTION 3/8 barb x 1/4 fem PT				
						CONNETTORE	CONNEXION	VERBINDUNG	P154
					TERMINAL	CONECTOR	CONNECTION	CONNECTION	
23		217-103		1	COCK, DRAIN 1/4 PT	CRICCO	ROBINET DE VIDANGE	ABLASSHAHN	Z158
					LLAVE DE PASO	DRENO	COCK, DRAIN	COCK, DRAIN	
24		256719A3		1	SUPPORT	SUPPORTO	SUPPORT	STUETZE	8790
					APOYADERO	SUPORTE	SUPPORT	SUPPORT	
25		255647A5		1	SUPPORT	SUPPORTO	SUPPORT	STUETZE	8790
					APOYADERO	SUPORTE	SUPPORT	SUPPORT	
26		844-12025		4	SCREW M12 x 25; 8.8	VITE	VIS	SCHRAUBE	7450
					TORNILLO	PARAFUSO	SCHROEF	SKRUE	
27		434177A1		4	MOUNTING, RUBBER	SUPPORTO, DI GOMMA	PALIER CAOUTCHOUC	GUMMIHALTERUNG	P777
					TEJUELO, GOMA	MONTAGEM DE BORRAC	MOUNTING, RUBBER	MOUNTING, RUBBER	
28		495-81120		4	WASHER 11/32 x 1-1/4 x 7/64				
						ROSETTA PIANA	RONDELLE	SCHEIBE	9720
					ARANDELA	ANILHA	SLUITRING	FLADSKIVE	
29		614-8030		4	SCREW M8 x 30; 8.8	VITE	VIS	SCHRAUBE	P136
					TORNILLO	PARAFUSO	SCHROEF	SKRUE	
30		417375A2		1	PLATE, LARGE	PIASTRA, LARGA	PLAQUE, GRANDE	PLATTE, GROSS	Z308
					PLACA, GRANDE	PLACA ESPESSA	PLATE, LARGE	PLATE, LARGE	
31		844-8016		6	SCREW M8 x 16; 8.8	VITE	VIS	SCHRAUBE	7450
					TORNILLO	PARAFUSO	SCHROEF	SKRUE	
32		426356A1		2	LINING 184 mm (7-1/4 in)	RIVESTIMENTO	GARNITURE	BELAG	5260
					REVESTEMIENTO	REVESTIMENTO	LINING	FORING	
33		417390A1		2	LINING 117 mm (4-7/64 in)	RIVESTIMENTO	GARNITURE	BELAG	5260
					REVESTEMIENTO	REVESTIMENTO	LINING	FORING	
34		895-11008		2	WASHER 9 x 16 x 1.6 mm	ROSETTA PIANA	RONDELLE	BEILAGSCHEIBE	131R
					ARANDELA	ANILHA	SLUITRING	FLADSKIVE	
35		198575A1		1	SCREW	VITE	VIS	SCHRAUBE	7450
					TORNILLO	PARAFUSO	SCHROEF	SKRUE	
36		9804279		1	NUT M12	DADO	ECROU	MUTTER	010D
					TUERCA	PORCA	MOER	MØTRIK	
37		255646A1		1	SUPPORT Left Hand	SUPPORTO	SUPPORT	STUETZE	8790
					APOYADERO	SUPORTE	SUPPORT	SUPPORT	
38		255645A1		1	SUPPORT Right Hand	SUPPORTO	SUPPORT	STUETZE	8790
					APOYADERO	SUPORTE	SUPPORT	SUPPORT	
39		844-8016		4	SCREW M8 x 16; 8.8	VITE	VIS	SCHRAUBE	7450
					TORNILLO	PARAFUSO	SCHROEF	SKRUE	
40		296292A1		1	SEAL	ANELLO DI TENUTA	JOINT	DICHTUNG	7460
					ANILLO DE CIERRE	ANEL DE VEDACAO	DICHTINGSRING	PAKNINGSRING	

(1) Order 87413766 REF 53

RADIATOR AND FAN SHROUD
RADIATORE E PROTEZIONE DEL VENTILATORE
RADIATEUR ET DÉFLECTEUR DU VENTILATEUR
KÜHLER- UND LÜFTERVERKLEIDUNG

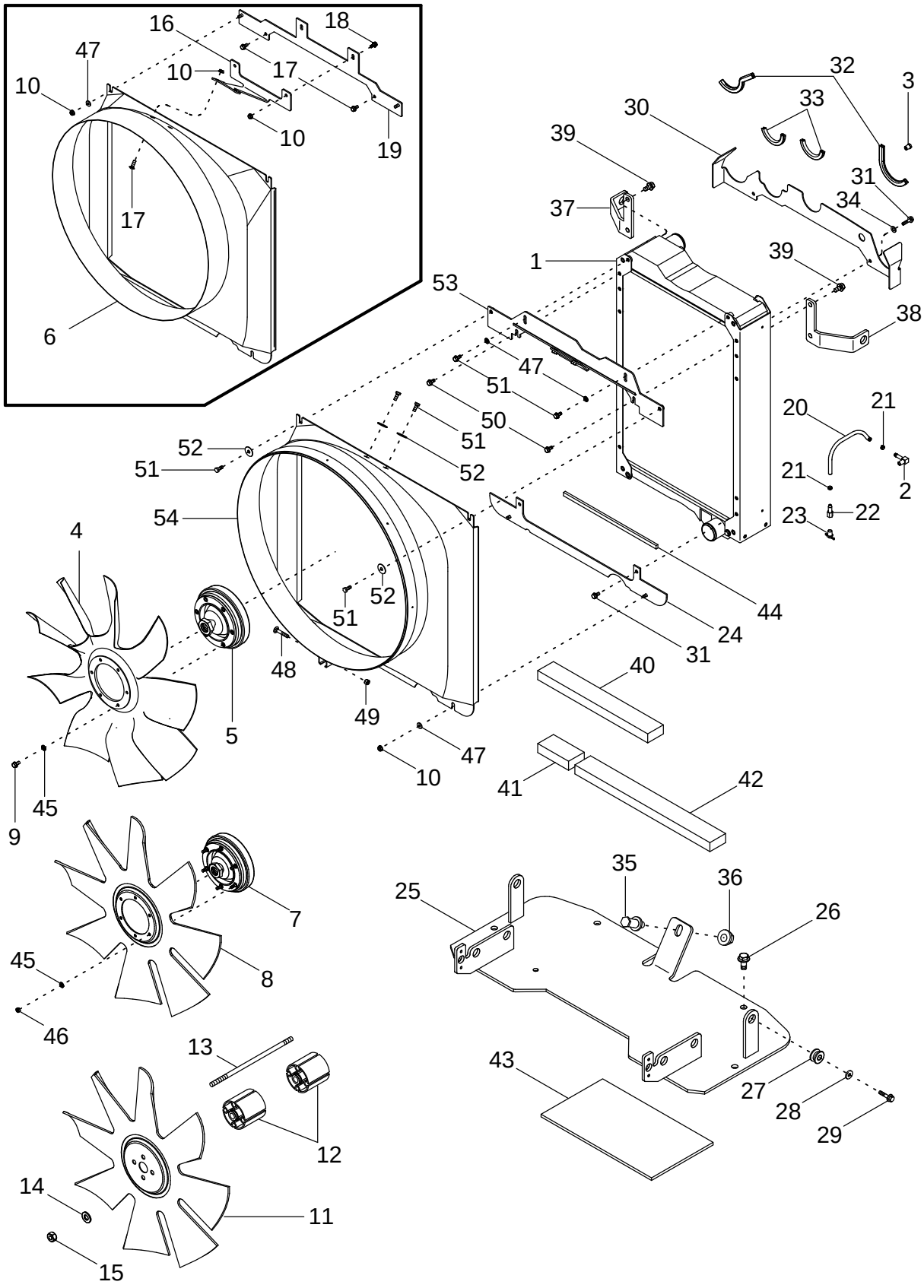

PROTECTOR DEL VENTILADOR Y RADIADOR
PROTECÇÃO DO RADIADOR E VENTOINHA
RADIATOR EN VENTILATORKAP
KØLER OG VENTILATORRING

R	N	P.N.	MOD	Q	Description Denominacion	Descrizione Denominação	Description Beschrijving	Bezeichnung Beskrivelse	L.C.
41		296294A1		1	SEAL ANILLO DE CIERRE	ANELLO DI TENUTA ANEL DE VEDACAO	JOINT DICHTINGSRING	DICHTUNG PAKNINGSRING	7460
42		296295A1		1	SEAL ANILLO DE CIERRE	ANELLO DI TENUTA ANEL DE VEDACAO	JOINT DICHTINGSRING	DICHTUNG PAKNINGSRING	7460
43		429228A1		1	SEAL ANILLO DE CIERRE	ANELLO DI TENUTA ANEL DE VEDACAO	JOINT DICHTINGSRING	DICHTUNG PAKNINGSRING	7460
44		357158A2		3	SEAL ANILLO DE CIERRE	ANELLO DI TENUTA ANEL DE VEDACAO	JOINT DICHTINGSRING	DICHTUNG PAKNINGSRING	132A
45	1, 2	496-11034		6	WASHER 11/32 x 11/16 x 1/16 ARANDELA	ROSETTA PIANA ANILHA	RONDELLE SLUITRING	SCHEIBE FLADSKIVE	9720
46	1, 2	829-1408		6	NUT M8; 10 TUERCA	DADO PORCA	ECROU MOER	MUTTER MØTRIK	010D
47		895-15008		4	WASHER 9 x 20 x 1,6 mm ARANDELA	ROSETTA PIANA ANILHA	RONDELLE SLUITRING	SCHEIBE FLADSKIVE	9720
48		612-4		1	BOLT Carriage, M8 x 50 mm TORNILLO	BULLONE PARAFUSO	BOULON BOUT	SCHAUBENBOLZEN SKRUE	140B
49		832-10408		1	NUT Lock, M8 TUERCA	DADO PORCA	ECROU MOER	MUTTER MØTRIK	010D
50		844-8016		4	SCREW M8 x 16; 8.8 TORNILLO	VITE PARAFUSO	VIS SCHROEF	SCHRAUBE SKRUE	7450
51		614-8020		6	SCREW M8 x 20 TORNILLO	VITE PARAFUSO	VIS SCHROEF	SCHRAUBE SKRUE	P136
52		495-81140		4	WASHER 13/32 x 1-1/4 x 1/16 ARANDELA	ROSETTA PIANA ANILHA	RONDELLE SLUITRING	SCHEIBE FLADSKIVE	9720
53		87413766		1	BRACKET PIEZA DE SOPORTE	STAFFA BRACADEIRA	PATTE FIXATION STEUNBEUGEL	HALTERUNG BESLAG	225S
54		87415556I		1	SHROUD Inc. 48, 49, 51 - 53 BOQUILLA	RIPARO COBERTURA	BUSE SHROUD	ABSCHIRMUNG DÆKKE	7830

(1) MX255
(2) MX285

02-02		p1	12/02

RADIATOR ASSEMBLY
GRUPPO DEL RADIATORE
RADIATEUR
KÜHLER

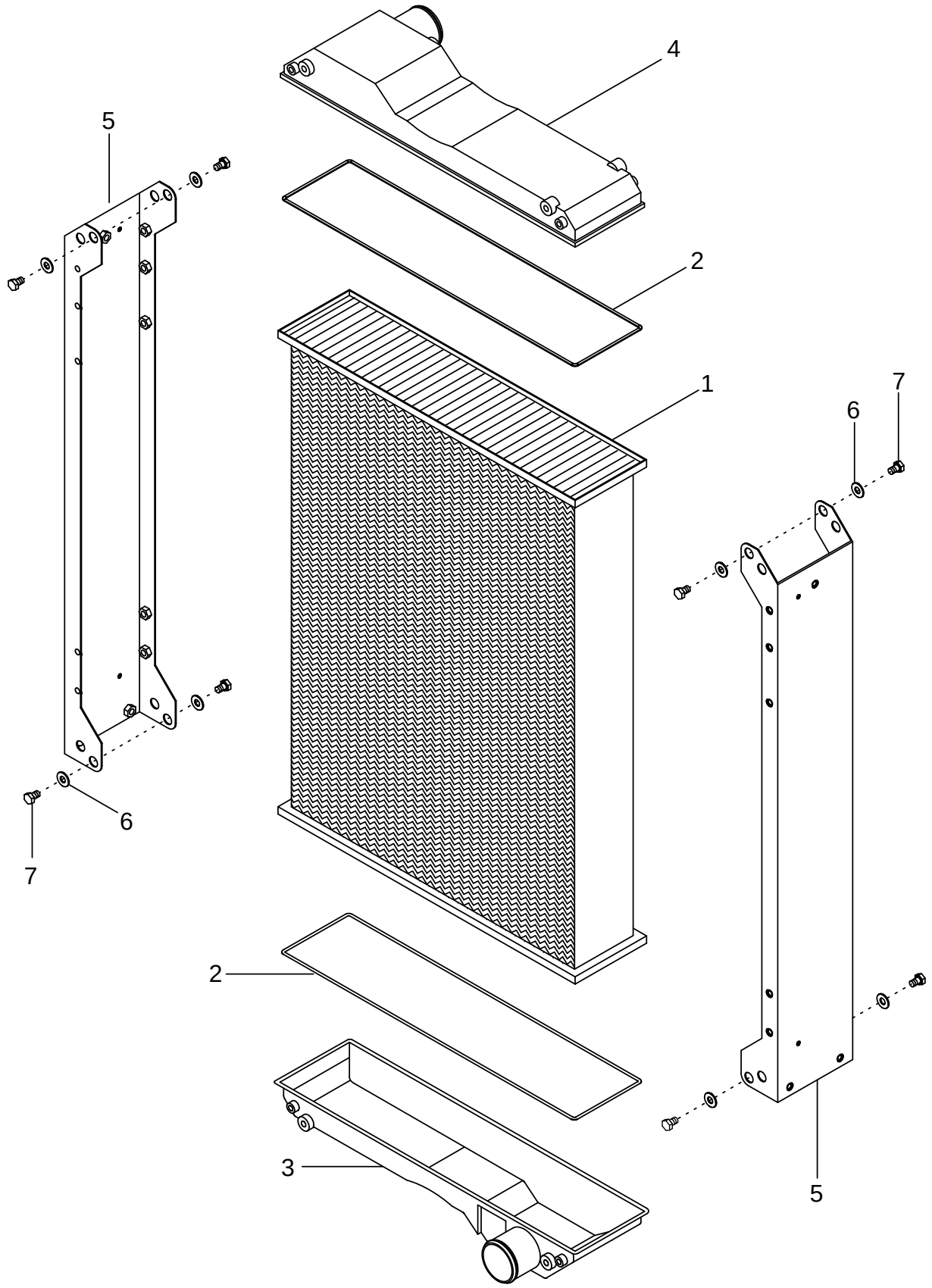

CONJUNTO DEL RADIADOR
CONJUNTO DO RADIADOR
RADIATEUR
KØLERSAMLING

R	N	P.N.	MOD	Q	Description Denominacion	Descrizione Denominação	Description Beschrijving	Bezeichnung Beskrivelse	L.C.
	1, 2	**417859A2**		1	RADIATOR Inc.1 - 7 RADIADOR	RADIATORE ARREFECEDOR	RADIATEUR RADIATORKOELER	KÜHLER KØLER	025R
	3, 4	**417858A2**		1	RADIATOR Inc.1 - 7 RADIADOR	RADIATORE ARREFECEDOR	RADIATEUR RADIATORKOELER	KÜHLER KØLER	025R
1		**NSS**		1	NOT SERVICED SEPARATELY Core NO SE REPARA SEPARA	NON FORNITO SEPARAT NOT SERVICED SEPARA	NON FOURNI SEPAREMI NIET ALLEEN VERKRIJG	KEIN ERSATZTEIL NOT SERVICED SEPARA	064N
2		**175163A1**		2	GASKET JUNTA HERMETICA	GUARNIZIONE JUNTA	JOINT DICHTINGSSTUK	DICHTUNG, FLACH PAKNING	123G
3		**256019A1**		1	TANK Bottom DEPOSITO	SERBATOIO DEPOSITO	RESERVOIR TANK	TANKBEHÄLTER TANK	8930
4		**394509A1**		1	TANK Top DEPOSITO	SERBATOIO DEPOSITO	RESERVOIR TANK	TANKBEHÄLTER TANK	115S
5		**417849A1**		2	CHANNEL CANAL	CANALE CANAL	CANAL KANAAL	RINNE KANAL	050C
6		**895-15008**		8	WASHER 9 x 20 x 1,6 mm ARANDELA	ROSETTA PIANA ANILHA	RONDELLE SLUITRING	SCHEIBE FLADSKIVE	9720
7		**614-8012**		8	SCREW M8 x 12; 8,8 TORNILLO	VITE PARAFUSO	VIS SCHROEF	SCHRAUBE SKRUE	P136

(1) MX210
(2) MX230
(3) MX255
(4) MX285

02-03		p1	10/04

DEAERATION SYSTEM
IMPIANTO DI DISAERAZIONE
SYSTÈME DE DÉSAÉRATION
AUSGLEICHSSYSTEM

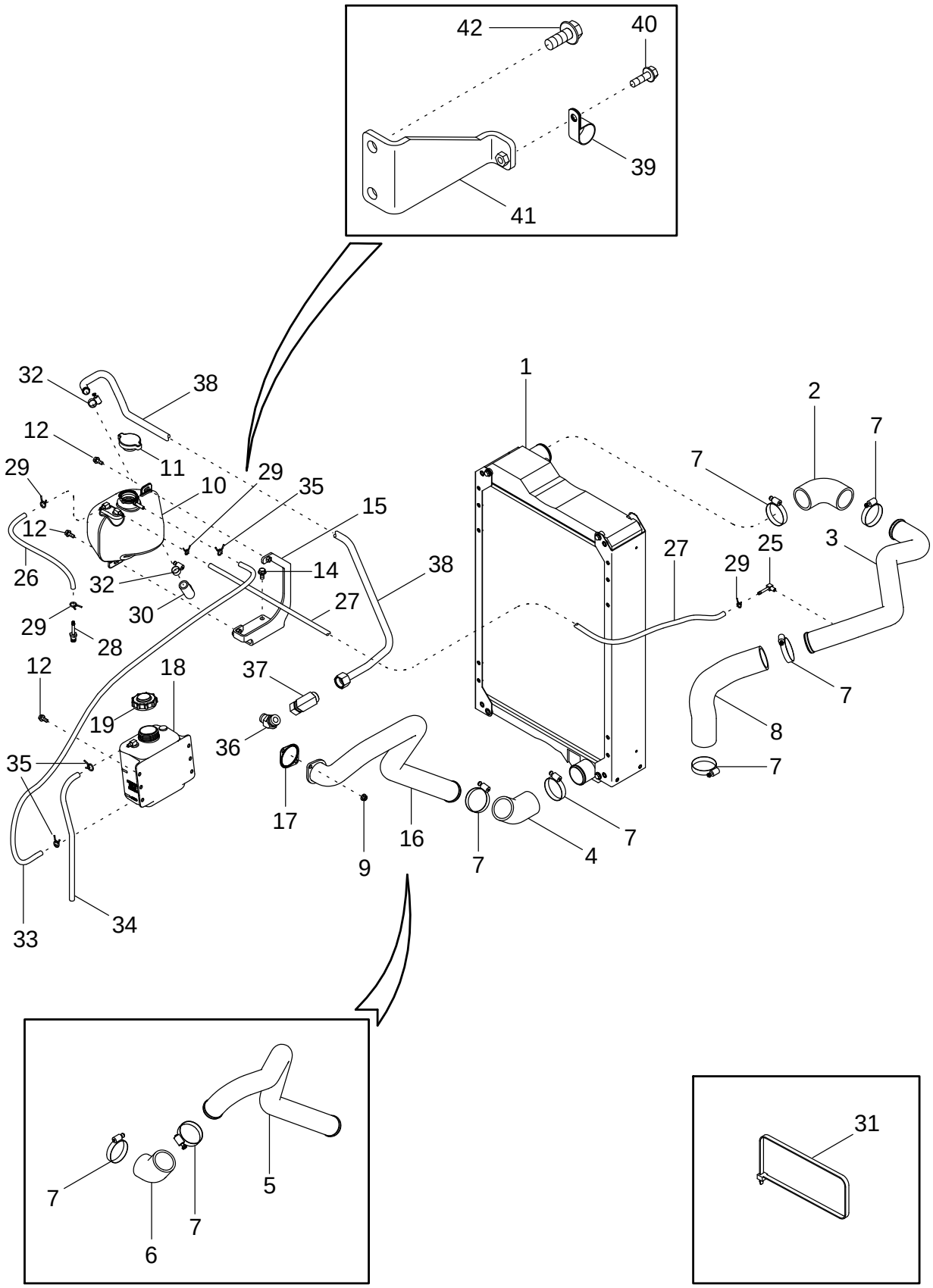

SISTEMA DE DESAIREACIÓN
SISTEMA DE ELIMINAÇÃO DE AR
ONTLUCHTINGSSYSTEEM
AFLUFTNINGSSYSTEM

R	N	P.N.	MOD	Q	Description Denominacion	Descrizione Denominação	Description Beschrijving	Bezeichnung Beskrivelse	L.C.
1	1	REF		1	INSTRUCTION Radiator MANUAL	ISTRUZIONI INSTRUCAO	NOTICE INSTRUCTION	HINWEIS SKO, INDRE	Z571
2		397511A1		1	HOSE MANGA	MANICOTTO FLESSIBILE TUBO FLEXIVEL	FLEXIBLE FLEXIBELE BUIS	SCHLAUCH SLANGE	030M
3		414388A2		1	TUBE TUBO	TUBETTO TUBO	TUBE BUISJE	SCHLAUCH RØR	195T
4		255682A2		1	HOSE, LARGE MANGUITO	TUBO FLESSIBILE,GRDE MANGOTE	DURITE HOSE, LARGE	SCHLAUCH, GROSS HOSE, LARGE	Z336
5		315911A1	a	1	HOSE, LARGE MANGUITO	TUBO FLESSIBILE,GRDE MANGOTE	DURITE HOSE, LARGE	SCHLAUCH, GROSS HOSE, LARGE	Z336
6		255683A2	a	1	HOSE MANGA	MANICOTTO FLESSIBILE TUBO FLEXIVEL	FLEXIBLE FLEXIBELE BUIS	SCHLAUCHMUFFE SLANGE	4480
7		214-3248		8	CLAMP 2-1/4 x 3-1/8 COLLAR	MORSETTO BRACADEIRA	COLLIER CLAMP	SCHELLE CLAMP	1640
8		414804A1		1	HOSE MANGA	MANICOTTO FLESSIBILE TUBO FLEXIVEL	FLEXIBLE FLEXIBELE BUIS	SCHLAUCH SLANGE	030M
9		87403515	b	2	BOLT M8 x 20; 8.8 TORNILLO	BULLONE PARAFUSO	BOULON BOUT	SCHAUBENBOLZEN SKRUE	140B
10		417934A1		1	TANK DEPOSITO	SERBATOIO DEPOSITO	RESERVOIR TANK	TANKBEHÄLTER TANK	115S
11		A170241		1	CAP, RADIATOR 15 psi TAPON RADIADOR	TAPPO RADIATORE TAMPAO	BOUCHON RADIATEUR RADIATORDOP	KÜHLERDECKEL KOELERDAEKSEL	039T
12		844-8020		4	BOLT M8 x 20; 8.8 TORNILLO	BULLONE PARAFUSO	BOULON BOUT	SCHAUBENBOLZEN SKRUE	140B
14		854-10020		3	SCREW M10 x 20; 10.9 TORNILLO	VITE PARAFUSO	VIS SCHROEF	SCHRAUBE SKRUE	7450
15		87404517		1	BRACKET PIEZA DE SOPORTE	STAFFA BRACADEIRA	PATTE FIXATION STEUNBEUGEL	HALTERUNG BESLAG	225S
16		87415507	b	1	TUBE ASSY. TUBO (CONJUNTO)	TUBO, COMPLESSIVO TUBO CONJUNTO	TUYAUTERIE TUBE ASSY.	ROHRLEITUNG TUBE ASSY.	P465
18		L127093		1	RESERVOIR, COOLANT EXPNSN DEPOSITO DE VACIO	SERBATOIO A DEPRESS DEPOSITO DE VACUO	RESERVOIR DEPRESSE VACUUMTANK	KÜHLMITTELAUSGLEICH VAKUMTANK	117S
19		440729A1		1	PLUG TAPÓN	TAPPO BUJÃO	BOUCHON PLUG	STOPFEN PROP	050T
25		217-130		1	ELBOW 1/4 stem x 1/8 PT CODO	GOMITO JOELHO	COUDE ELLEBOOG	KNIESTÜCK VINKELROER	085G
26	2	NSS		1	NOT SERVICED SEPARATELY HOSE, 6.4 ID x 500 mm (1/4 ID x 19-11/16 in) NO SE REPARA SEPARA	NON FORNITO SEPARAT NOT SERVICED SEPARA	NON FOURNI SEPAREMI NIET ALLEEN VERKRIJG	KEIN ERSATZTEIL NOT SERVICED SEPARA	064N
27	2	NSS		1	NOT SERVICED SEPARATELY HOSE, 6.4 ID x 600 mm (1/4 ID x 23-5/8 in) NO SE REPARA SEPARA	NON FORNITO SEPARAT NOT SERVICED SEPARA	NON FOURNI SEPAREMI NIET ALLEEN VERKRIJG	KEIN ERSATZTEIL NOT SERVICED SEPARA	064N
28		217-154		1	FITTING 1/4 stem x 1/4 PT CONEXION	RACCORDO CONEXAO	RACCORD FITTING	ANSCHLUSSSTÜCK FITTING	3300

(1) See Figure 02-02
(2) Cut From 382997C2
(a) BSN JAZ130634
(b) ASN JAZ130634

DEAERATION SYSTEM
IMPIANTO DI DISAERAZIONE
SYSTÈME DE DÉSAÉRATION
AUSGLEICHSSYSTEM

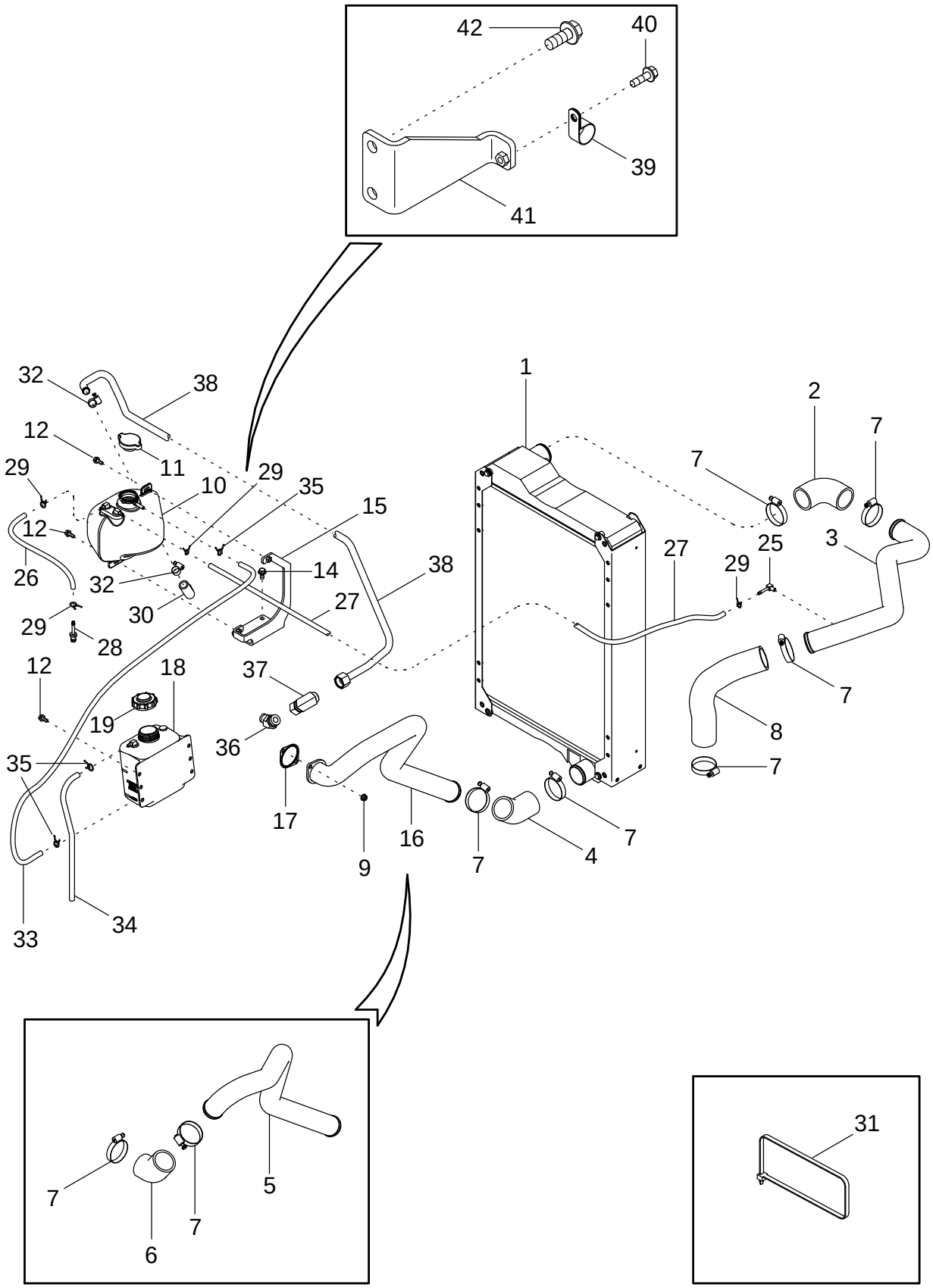

SISTEMA DE DESAIREACIÓN
SISTEMA DE ELIMINAÇÃO DE AR
ONTLUCHTINGSSYSTEEM
AFLUFTNINGSSYSTEM

R	N	P.N.	MOD	Q	Description Denominacion	Descrizione Denominação	Description Beschrijving	Bezeichnung Beskrivelse	L.C.
29		214-1307		4	CLAMP 7/16 COLLAR	MORSETTO BRACADEIRA	COLLIER CLAMP	SCHELLE CLAMP	1640
30	1	NSS		1	NOT SERVICED SEPARATELY HOSE				
						NON FORNITO SEPARAT	NON FOURNI SEPAREMI	KEIN ERSATZTEIL	064N
					NO SE REPARA SEPARA	NOT SERVICED SEPARA	NIET ALLEEN VERKRIJG	NOT SERVICED SEPARA	
31		291207C1		1	CLAMP Tie COLLAR	MORSETTO BRACADEIRA	COLLIER CLAMP	SCHELLE CLAMP	1640
32		214-1416		2	CLAMP 13/16 - 1-1/2 COLLAR	MORSETTO BRACADEIRA	COLLIER CLAMP	SCHELLE CLAMP	1640
33	2	NSS		1	NOT SERVICED SEPARATELY HOSE, 6.4 ID x 1100 mm (1/4 ID x 43-19/64 in)				
						NON FORNITO SEPARAT	NON FOURNI SEPAREMI	KEIN ERSATZTEIL	064N
					NO SE REPARA SEPARA	NOT SERVICED SEPARA	NIET ALLEEN VERKRIJG	NOT SERVICED SEPARA	
34		242070A1		1	HOSE MANGA	MANICOTTO FLESSIBILE TUBO FLEXIVEL	FLEXIBLE FLEXIBELE BUIS	SCHLAUCH SLANGE	030M
35		214-1308		3	CLAMP 1/2 COLLAR	MORSETTO BRACADEIRA	COLLIER CLAMP	SCHELLE CLAMP	1640
36		440431A1		1	ELBOW 3/4 PT x 1-3/16 CODO	GOMITO JOELHO	COUDE ELLEBOOG	KNIESTÜCK VINKELROER	085G
37		201-342		1	ELBOW 90 Degree Swivel, 1-3/16				
						GOMITO	COUDE	KNIESTÜCK	2940
					CODO	JOELHO	ELLEBOOG	VINKELRØR	
38		87403836		1	TUBE TUBO	TUBETTO TUBO	TUBE BUISJE	SCHLAUCH RØR	195T
39		515-21190		1	CLAMP 3/4 ID COLLAR	MORSETTO BRACADEIRA	COLLIER CLAMP	SCHELLE CLAMP	1640
40		844-6020		1	SCREW M6 x 20; 8.8 TORNILLO	VITE PARAFUSO	VIS SCHROEF	SCHRAUBE SKRUE	P136
41		87404840		1	SUPPORT If Equipped, Used Without Trailer Brake				
						SUPPORTO	SUPPORT	STÜTZE	300S
					SOPORTE	SUPORTE	STEUN	BESLAG	
42		844-10025		2	SCREW M10 x 25; 8.8 TORNILLO	VITE PARAFUSO	VIS SCHROEF	SCHRAUBE SKRUE	P136

(1) Cut From 429211A1
(2) Cut From 382997C2

02-04		p1	09/04

AIR INDUCTION SYSTEM - STANDARD DUTY
SISTEMA DI ASPIRAZIONE FORZATA DELL'ARIA - SERVIZIO STANDARD
SYSTÈME D'INDUCTION D'AIR - SERVICE STANDARD
LUFTANSAUGSYSTEM - STANDARDBETRIEB

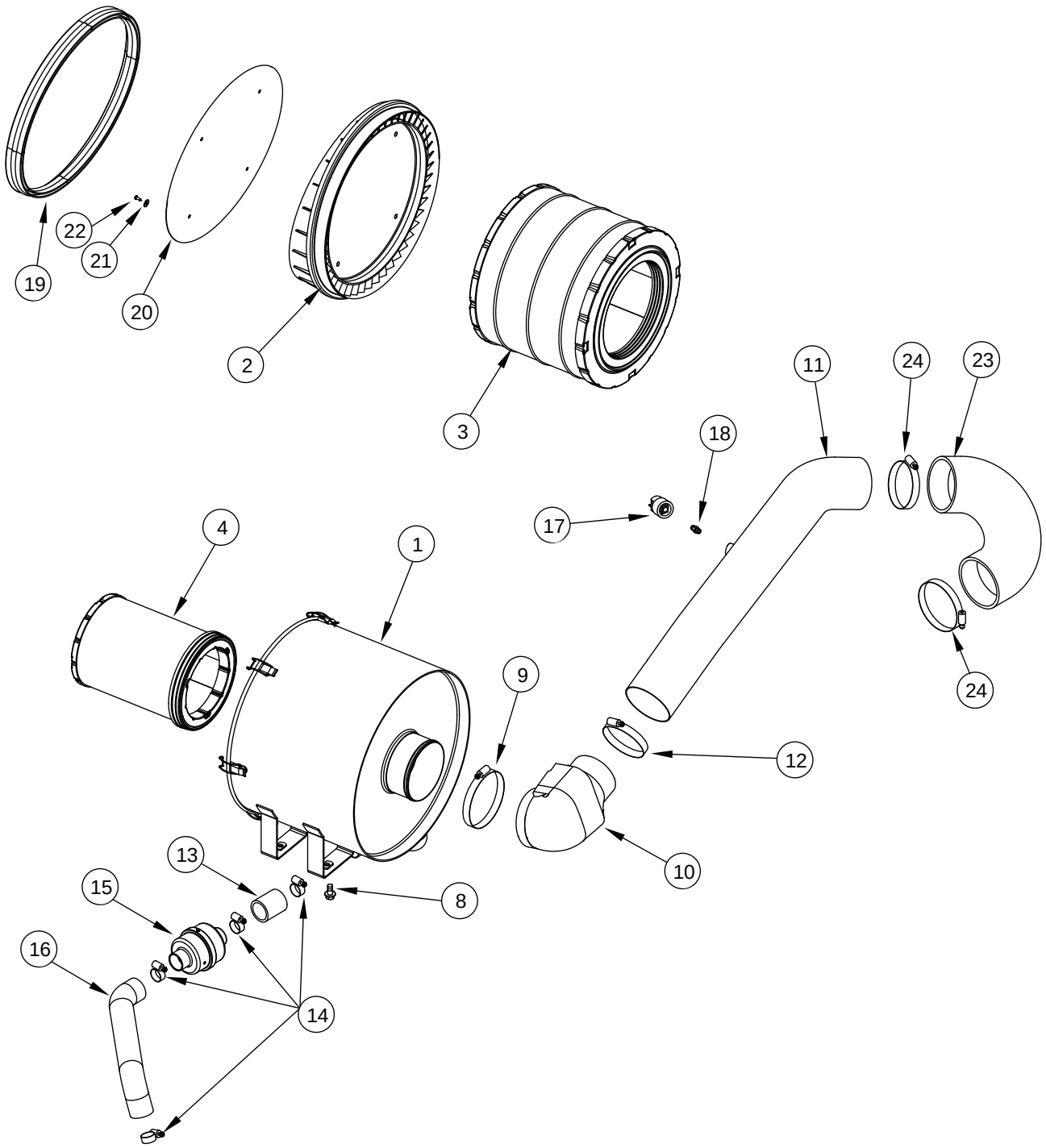

SISTEMA DE INDUCCIÓN DE AIRE - PARA SERVICIO ESTÁNDAR
SISTEMA DE INDUÇÃO DE AR - TRABALHOS NORMAIS
LUCHTINDUCTIESYSTEEM - STANDAARD BEDRIJF
LUFTINDSUGNINGSSYSTEM - STANDARD

R	N	P.N.	MOD	Q	Description Denominacion	Descrizione Denominação	Description Beschrijving	Bezeichnung Beskrivelse	L.C.
		291903A3		1	AIR CLEANER Inc. 1 - 4 DEPURADOR	DEPURATORE DEPURADOR	FILTER A AIR LUCHTREINIGER	LUFTREINIGER LUFTFILTER	P002
1		NSS		1	NOT SERVICED SEPARATELY Body NO SE REPARA SEPARA	NON FORNITO SEPARAT NOT SERVICED SEPARA	NON FOURNI SEPAREMI NIET ALLEEN VERKRIJG	KEIN ERSATZTEIL NOT SERVICED SEPARA	064N
2		294291A1		1	COVER TAPA	COPERCHIO TAMPA	COUVERCLE COVER	DECKEL COVER	2250
3		294292A1		1	AIR CLEANER DEPURADOR	DEPURATORE DEPURADOR	FILTER A AIR LUCHTREINIGER	LUFTREINIGER LUFTFILTER	P002
4		294293A1		1	AIR CLEANER DEPURADOR	DEPURATORE DEPURADOR	FILTER A AIR LUCHTREINIGER	LUFTREINIGER LUFTFILTER	P002
8		844-10020		4	SCREW M10 x 20; 8,8 TORNILLO	VITE PARAFUSO	VIS SCHROEF	SCHRAUBE SKRUE	7450
9		214-3296		1	CLAMP 5-1/4 - 6-1/8 COLLAR	MORSETTO BRACADEIRA	COLLIER CLAMP	SCHELLE CLAMP	1640
10		352790A1		1	DUCT CONDUCTO	CONDOTTO COLECTOR	CONDUIT LEIDING	LEITUNG KANAL	2880
11		352792A1		1	TUBE TUBO	TUBETTO TUBO	TUBE BUISJE	ROHR RØR	9400
12		214-3280		1	CLAMP 4-1/4 - 5-1/8 COLLAR	MORSETTO BRACADEIRA	COLLIER CLAMP	SCHELLE CLAMP	1640
13		414194A1		1	HOSE MANGA	MANICOTTO FLESSIBILE TUBO FLEXIVEL	FLEXIBLE FLEXIBELE BUIS	SCHLAUCHMUFFE SLANGE	4480
14		214-1424		4	CLAMP 1-1/16 - 2 COLLAR	MORSETTO BRACADEIRA	COLLIER CLAMP	SCHELLE CLAMP	1640
15		284427A1		1	VALVE VALVULA	VALVOLA VALVULA	VALVE VALVE	VENTIL VALVE	P468
16		414075A1		1	HOSE MANGA	MANICOTTO FLESSIBILE TUBO FLEXIVEL	FLEXIBLE FLEXIBELE BUIS	SCHLAUCHMUFFE SLANGE	4480
17		79081900		1	SWITCH, PRESSURE Restriction INTERRUPTOR DE PRES	INTERRUTTORE PRESSI INTERRUPTOR DE PRES	PRESSOSTAT DRUKSCHAKELAAR	DRUCKSCHALTER TRYKKONTAKT	079I
18		217-1079		1	FITTING 1/8 PT CONEXION	RACCORDO CONEXAO	RACCORD FITTING	ANSCHLUSSSTÜCK FITTING	3300
19		365829A1		1	SEAL ANILLO DE CIERRE	ANELLO DI TENUTA ANEL DE VEDACAO	JOINT DICHTINGSRING	DICHTUNG PAKNINGSRING	7460
20		282109A1		1	BAFFLE DEFLECTOR	DEFLETTORE DEFLETOR	CHICANE BAFFLE	ABWEISPLATTE SKÆRMPLADE	0420
21		895-25005		4	WASHER 5,5 x 15 x 1,6 mm ARANDELA	ROSETTA PIANA ANILHA	RONDELLE SLUITRING	SCHEIBE FLADSKIVE	9720
22		760-14313		4	SCREW M4,2 x 13 TORNILLO	VITE PARAFUSO	VIS SCHROEF	SCHRAUBE SKRUE	7450
23		297362A1		1	HOSE, LARGE MANGUITO	TUBO FLESSIBILE,GRDE MANGOTE	DURITE HOSE, LARGE	SCHLAUCH, GROSS HOSE, LARGE	Z336
24		214-3280		2	CLAMP 4-1/4 - 5-1/8 COLLAR	MORSETTO BRACADEIRA	COLLIER CLAMP	SCHELLE CLAMP	1640

02-05		p1	11/04

AIR INDUCTION SYSTEM - SEVERE DUTY
SISTEMA DI ASPIRAZIONE FORZATA DELL'ARIA - SERVIZIO PESANTE
SYSTÈME D'INDUCTION D'AIR - SERVICE INTENSIF
LUFTANSAUGSYSTEM - EXTREMBETRIEB

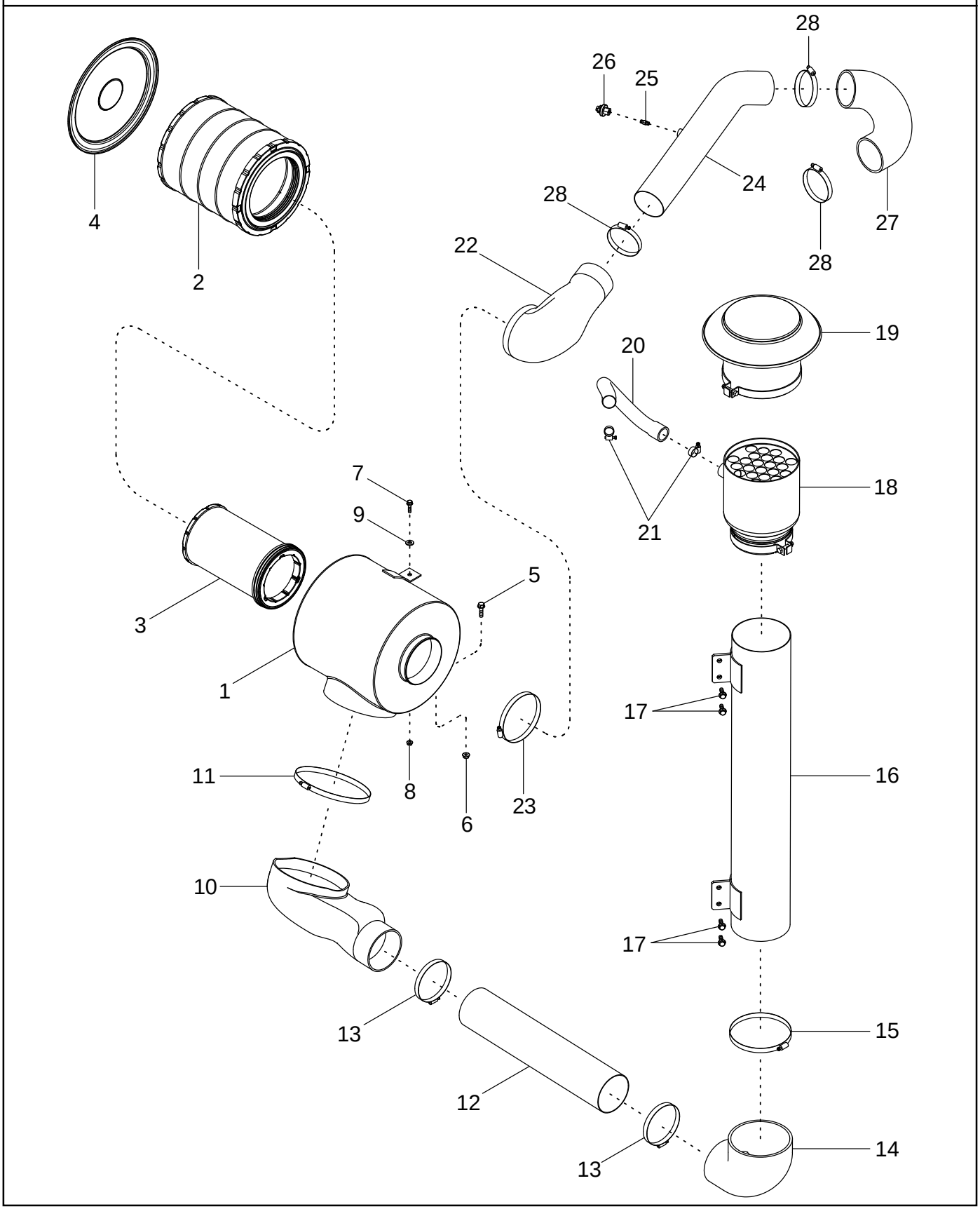

SISTEMA DE INDUCCIÓN DE AIRE - PARA SERVICIO PESADO
SISTEMA DE INDUÇÃO DE AR - TRABALHOS PESADOS
LUCHTINDUCTIESYSTEEM - ZEER ZWAAR BEDRIJF
LUFTINDSUGNINGSSYSTEM - KRAFTIGT

R	N	P.N.	MOD	Q	Description Denominacion	Descrizione Denominação	Description Beschrijving	Bezeichnung Beskrivelse	L.C.
1		87410376		1	AIR CLEANER DEPURADOR	DEPURATORE DEPURADOR	FILTER A AIR LUCHTREINIGER	LUFTREINIGER LUFTFILTER	021D
2		367349A1		1	FILTER Primary FILTRO	FILTRO FILTRO	FILTRE FILTER	FILTER FILTER	3240
3		367350A1		1	FILTER Secondary FILTRO	FILTRO FILTRO	FILTRE FILTER	FILTER FILTER	3240
4		379554A1		1	COVER TAPA	COPERCHIO TAMPA	COUVERCLE COVER	DECKEL COVER	2250
5		844-10020		2	SCREW M10 x 20; 8,8 TORNILLO	VITE PARAFUSO	VIS SCHROEF	SCHRAUBE SKRUE	7450
6		825-2410		2	NUT M10 TUERCA	DADO PORCA	ECROU MOER	MUTTER MØTRIK	010D
7		844-8030		1	SCREW M8 x 30; 8,8 TORNILLO	VITE PARAFUSO	VIS SCHROEF	SCHRAUBE SKRUE	040V
8		825-2408		1	NUT M8 TUERCA	DADO PORCA	ECROU MOER	MUTTER MØTRIK	5780
9		895-15010		UAR	WASHER 11 x 24 x 2 mm ARANDELA	ROSETTA PIANA ANILHA	RONDELLE SLUITRING	SCHEIBE FLADSKIVE	9720
10		87416128		1	DUCT, AIR CONDUCTO DE AIRE	CONDOTTO ARIA CONDUTA DE AR	CONDUIT D'AIR LUCHTLEIDING	LUFTLEITUNG LUFTKANAL	224C
11		214-31160		1	CLAMP COLLAR	MORSETTO BRACADEIRA	COLLIER CLAMP	SCHELLE CLAMP	1640
12		87410370		1	TUBE TUBO	TUBETTO TUBO	TUBE BUISJE	SCHLAUCH RØR	195T
13		214-3296		2	CLAMP COLLAR	MORSETTO BRACADEIRA	COLLIER CLAMP	SCHELLE CLAMP	1640
14		87410367		1	HOSE, LARGE MANGUITO	TUBO FLESSIBILE,GRDE MANGOTE	DURITE HOSE, LARGE	SCHLAUCH, GROSS HOSE, LARGE	Z336
15		214-32128		1	CLAMP COLLAR	MORSETTO BRACADEIRA	COLLIER CLAMP	SCHELLE CLAMP	1640
16		87416138		1	TUBE TUBO	TUBETTO TUBO	TUBE BUISJE	SCHLAUCH RØR	195T
17		844-10030		4	SCREW M10 x 30; 8,8 TORNILLO	VITE PARAFUSO	VIS SCHROEF	SCHRAUBE SKRUE	P136
18		87426752		1	AIR CLEANER Precleaner DEPURADOR	DEPURATORE DEPURADOR	FILTER A AIR LUCHTREINIGER	LUFTREINIGER LUFTFILTER	P002
19		87417755		1	COVER TAPADERA	COPERCHIO COBERTA	COUVERCLE DEKSEL	DECKEL DÆKSEL	265C
20		87425759		1	HOSE MANGA	MANICOTTO FLESSIBILE TUBO FLEXIVEL	FLEXIBLE FLEXIBELE BUIS	SCHLAUCH SLANGE	030M
21		214-1424		2	CLAMP COLLAR	MORSETTO BRACADEIRA	COLLIER CLAMP	SCHELLE CLAMP	1640
22		87409597		1	DUCT, AIR CONDUCTO DE AIRE	CONDOTTO ARIA CONDUTA DE AR	CONDUIT D'AIR LUCHTLEIDING	LUFTLEITUNG LUFTKANAL	224C
23		214-32112		1	CLAMP COLLAR	MORSETTO BRACADEIRA	COLLIER CLAMP	SCHELLE CLAMP	1640
24		87416130		1	TUBE TUBO	TUBETTO TUBO	TUBE BUISJE	SCHLAUCH RØR	195T

AIR INDUCTION SYSTEM - SEVERE DUTY
SISTEMA DI ASPIRAZIONE FORZATA DELL'ARIA - SERVIZIO PESANTE
SYSTÈME D'INDUCTION D'AIR - SERVICE INTENSIF
LUFTANSAUGSYSTEM - EXTREMBETRIEB

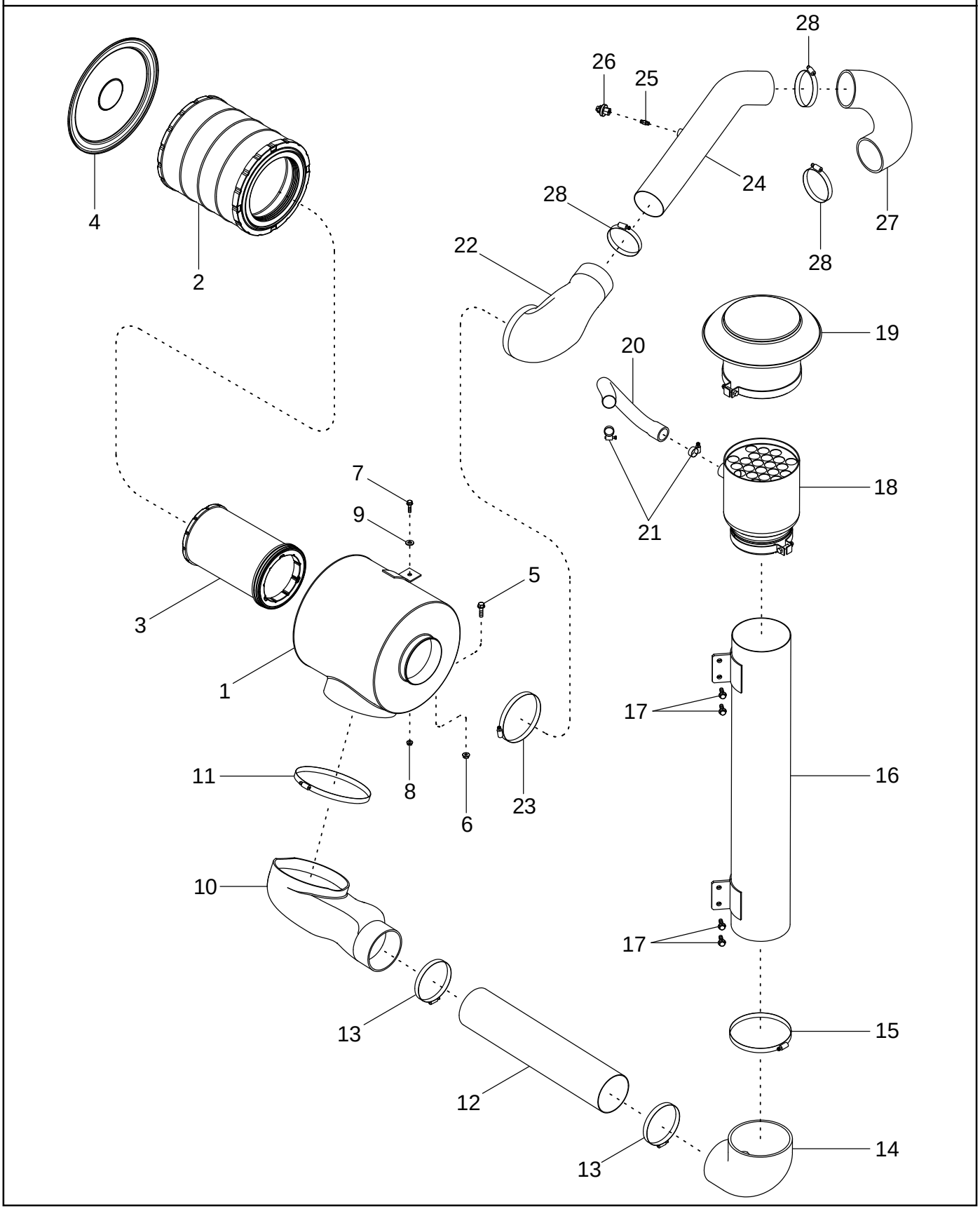

SISTEMA DE INDUCCIÓN DE AIRE - PARA SERVICIO PESADO
SISTEMA DE INDUÇÃO DE AR - TRABALHOS PESADOS
LUCHTINDUCTIESYSTEEM - ZEER ZWAAR BEDRIJF
LUFTINDSUGNINGSSYSTEM - KRAFTIGT

R	N	P.N.	MOD	Q	Description Denominacion	Descrizione Denominação	Description Beschrijving	Bezeichnung Beskrivelse	L.C.
25		217-1079		1	FITTING CONEXION	RACCORDO CONEXAO	RACCORD FITTING	ANSCHLUSSSTÜCK FITTING	3300
26		79081900		1	SWITCH, PRESSURE Restriction INTERRUPTOR DE PRES	INTERRUTTORE PRESSI INTERRUPTOR DE PRES	PRESSOSTAT DRUKSCHAKELAAR	DRUCKSCHALTER TRYKKONTAKT	079I
27		297362A1		1	HOSE, LARGE MANGUITO	TUBO FLESSIBILE,GRDE MANGOTE	DURITE HOSE, LARGE	SCHLAUCH, GROSS HOSE, LARGE	Z336
28		214-3280		3	CLAMP COLLAR	MORSETTO BRACADEIRA	COLLIER CLAMP	SCHELLE CLAMP	1640

02-06		p1	11/04

AFTERCOOLER
POSTREFRIGERATORE
REFROIDISSEUR INTERMÉDIAIRE
LADELUFTKÜHLER

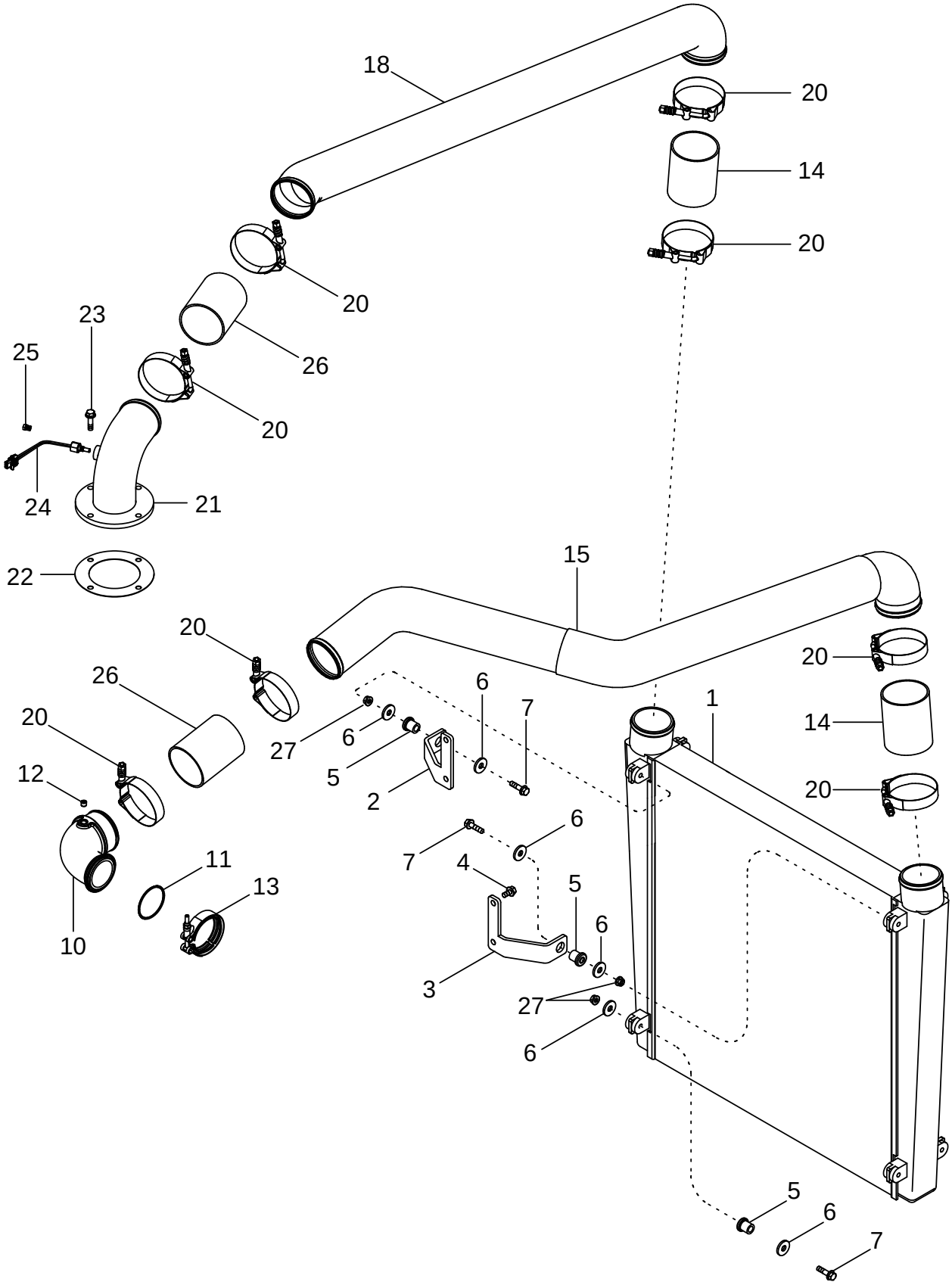

POSTREFRIGERADOR
ARREFECEDOR FINAL
NAKOELER
EFTERKØLER

R	N	P.N.	MOD	Q	Description Denominacion	Descrizione Denominação	Description Beschrijving	Bezeichnung Beskrivelse	L.C.
1		437249A1		1	COOLER Air to Air ENFRIADOR	REFRIGERATORE RADIADOR	REFROIDISSEUR COOLER	KÜHLER KØLER	2130
2		255646A1		1	SUPPORT Left Hand APOYADERO	SUPPORTO SUPORTE	SUPPORT SUPPORT	STUETZE SUPPORT	8790
3		255645A1		1	SUPPORT Right Hand APOYADERO	SUPPORTO SUPORTE	SUPPORT SUPPORT	STUETZE SUPPORT	8790
4		844-8016		4	SCREW M8 x 16; 8.8 TORNILLO	VITE PARAFUSO	VIS SCHROEF	SCHRAUBE SKRUE	7450
5		434177A1		4	MOUNTING, RUBBER TEJUELO, GOMA	SUPPORTO, DI GOMMA MONTAGEM DE BORRAC	PALIER CAOUTCHOUC MOUNTING, RUBBER	GUMMIHALTERUNG MOUNTING, RUBBER	P777
6		495-81120		8	WASHER 11/32 x 1-1/4 x 7/64 ARANDELA	ROSETTA PIANA ANILHA	RONDELLE SLUITRING	SCHEIBE FLADSKIVE	9720
7		814-8060		4	SCREW M8 x 60; 8,8 TORNILLO	VITE PARAFUSO	VIS SCHROEF	SCHRAUBE SKRUE	040V
10		J918685		1	PIPE CUELLO DE CARGA	TUBO TUBO DE ENCHIMENTO	TUYAU OPVULPIJP	ROHR PAAFYLDNINGSSTUDS	6240
11		J883284		1	SEAL ANILLO DE CIERRE	ANELLO DI TENUTA ANEL DE VEDACAO	JOINT DICHTINGSRING	DICHTUNG PAKNINGSRING	132A
12		J008465		1	PLUG TAPÓN	TAPPO BUJAO	BOUCHON PLUG	STOPFEN PROP	6400
13		J069053		1	CLAMP COLLAR	MORSETTO BRACADEIRA	COLLIER CLAMP	SCHELLE CLAMP	1640
14		362341A1		2	HOSE MANGA	MANICOTTO FLESSIBILE TUBO FLEXIVEL	FLEXIBLE FLEXIBELE BUIS	SCHLAUCHMUFFE SLANGE	4480
15		414642A2		1	PIPE CUELLO DE CARGA	TUBO TUBO DE ENCHIMENTO	TUYAU OPVULPIJP	ROHR PAAFYLDNINGSSTUDS	200T
18		361992A2		1	PIPE CUELLO DE CARGA	TUBO TUBO DE ENCHIMENTO	TUYAU OPVULPIJP	ROHR PAAFYLDNINGSSTUDS	6240
20		364751A1		8	CLAMP BORNE	MORSETTO BORNE	BRIDE KLEM	KLEMME SPÆNDEBÅND	120M
21		220851A1		1	ELBOW CODO	GOMITO JOELHO	COUDE ELLEBOOG	KNIESTÜCK VINKELRØR	2940
22		J917892		1	GASKET JUNTA HERMETICA	GUARNIZIONE JUNTA	JOINT DICHTINGSSTUK	DICHTUNG, FLACH PAKNING	123G
23		844-8030		4	SCREW M8 x 30; 8.8 TORNILLO	VITE PARAFUSO	VIS SCHROEF	SCHRAUBE SKRUE	040V
24	1, 2	194346A1		1	SENSOR Air to Air Temperature SENSOR	SENSORE SENSOR	CAPTEUR SENSOR	SENSOR FØLER	608S
25	3, 4	217-402		1	PLUG 1/8 PT TAPÓN	TAPPO BUJAO	BOUCHON PLUG	STOPFEN PROP	6400
26		377592A1		2	HOSE MANGA	MANICOTTO FLESSIBILE TUBO FLEXIVEL	FLEXIBLE FLEXIBELE BUIS	SCHLAUCH SLANGE	030M

(1) MX210
(2) MX230
(3) MX255
(4) MX285

AFTERCOOLER
POSTREFRIGERATORE
REFROIDISSEUR INTERMÉDIAIRE
LADELUFTKÜHLER

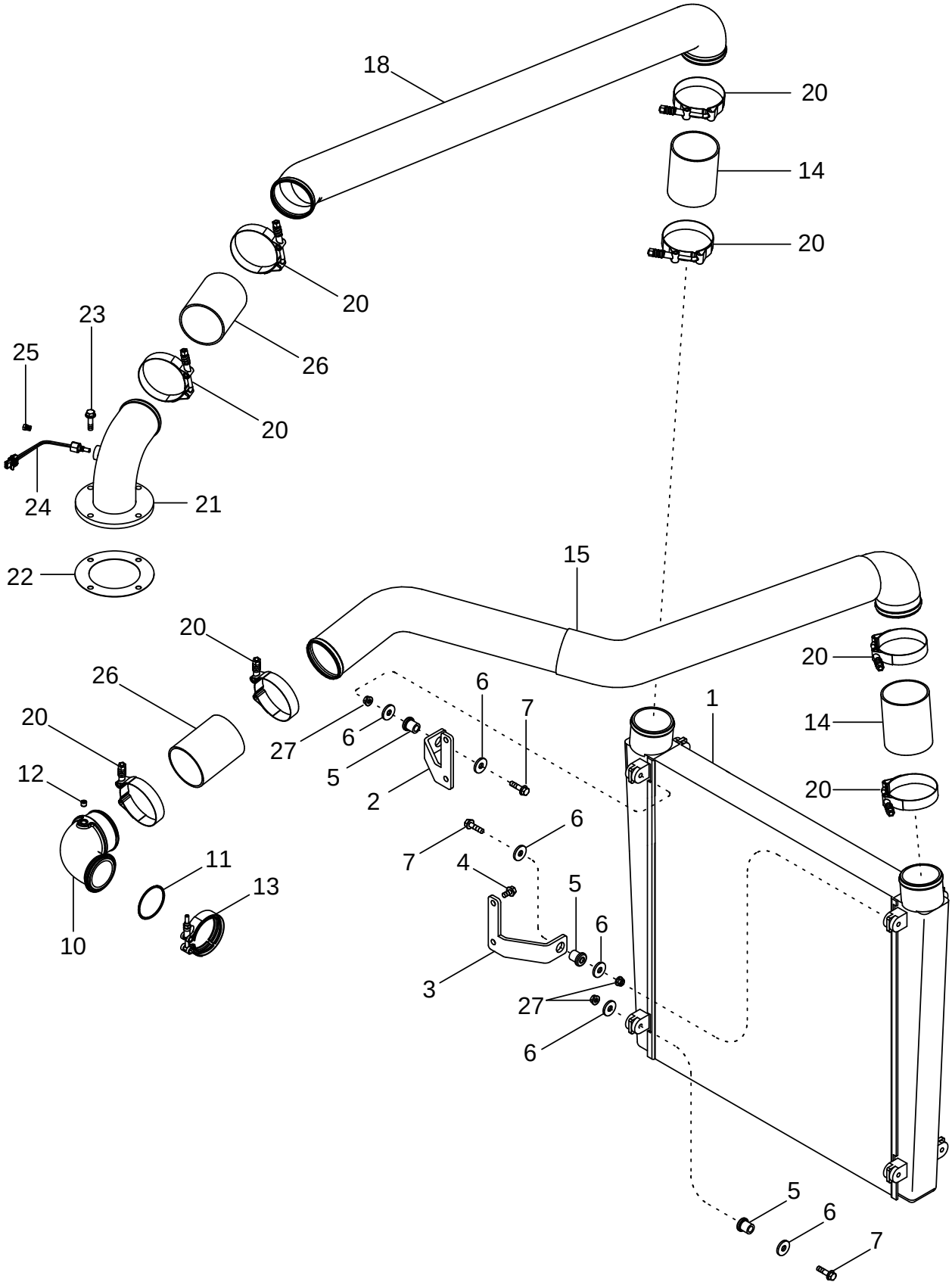

POSTREFRIGERADOR
ARREFECEDOR FINAL
NAKOELER
EFTERKØLER

R	N	P.N.	MOD	Q	Description Denominacion	Descrizione Denominação	Description Beschrijving	Bezeichnung Beskrivelse	L.C.
27		825-5148		4	NUT M8; 8 TUERCA	DADO PORCA	ECROU MOER	MUTTER MØTRIK	5780

02-07		p1	11/04

ETHER START SYSTEM
IMPIANTO DI AVVIAMENTO AD ETERE
SYSTÈME DE DÉMARRAGE À L'ÉTHER
ÄTHERSTARTHILFE-SYSTEM

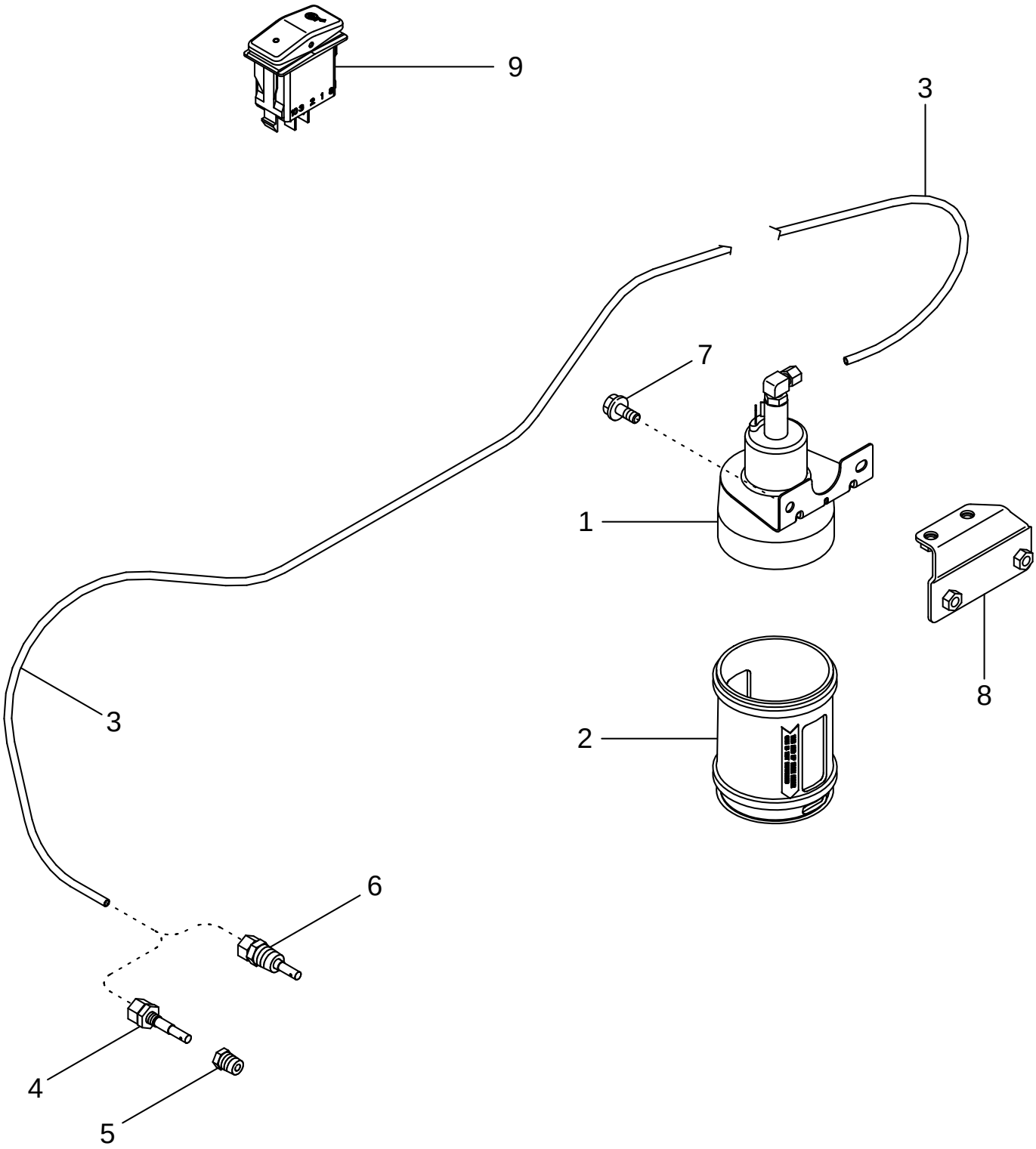

SISTEMA DE ARRANQUE POR ÉTER
SISTEMA DE ARRANQUE A ÉTER
ETHERSTARTSYSTEEM
ÆTERSTARTSYSTEM

R	N	P.N.	MOD	Q	Description Denominacion	Descrizione Denominação	Description Beschrijving	Bezeichnung Beskrivelse	L.C.
1		185552A2		1	SOLENOID 12V, Inc. 2 SOLENOIDE	SOLENOIDE SOLEMOID	SOLENOIDE SOLENOIDE	MAGNETSPULE, MECH. MAGNETVENTIL	168S
2		190752A1		1	HOUSING CAVIDAD	ALLOGGIAMENTO ALOJAMENTO	CARTER HUIS	GEHÄUSE HUS	014V
3		A149932		1	TUBE 2006 mm (79 in) TUBO	TUBETTO TUBO	TUBE BUISJE	ROHR RØR	9400
4	1, 2	A172900		1	NOZZLE CAP TOBERA	UGELLO INJETOR	BEC INJECTEUR NOZZLE CAP	DÜSENKAPPE NOZZLE CAP	5770
5	1, 2	217-40		1	REDUCER 1/4 x 1/8 PT REDUCTOR	RIDUZIONE REDUTOR	REDUCTEUR VERLOOPSTUK	REDUZIERSTÜCK REDUKTION	056R
6	3, 4	A145069		1	NOZZLE INJECTION INYECTOR	UGELLO INJECTOR	INJECTEUR NOZZLE INJECTION	EINSPRITZDUESE NOZZLE INJECTION	4640
7		243675A1		2	SCREW M8 x 12 TORNILLO	VITE PARAFUSO	VIS SCHROEF	SCHRAUBE SKRUE	7450
8		396829A1		1	BRACKET PIEZA DE SOPORTE	STAFFA SUPORTE	PATTE FIXATION STEUNBEUGEL	HALTERUNG BESLAG	1010
9		86989943		1	SWITCH Ether Start CONTACTOR	INTERRUTTORE INTERRUPTOR	CONTACTEUR SCHAKELAAR	SCHALTER KONTAKT	075I

(1) MX210
(2) MX230
(3) MX255
(4) MX285

02-08		p1	11/04

EXHAUST SYSTEM
IMPIANTO DI SCARICO
SYSTÈME D'ÉCHAPPEMENT
ABGASSYSTEM

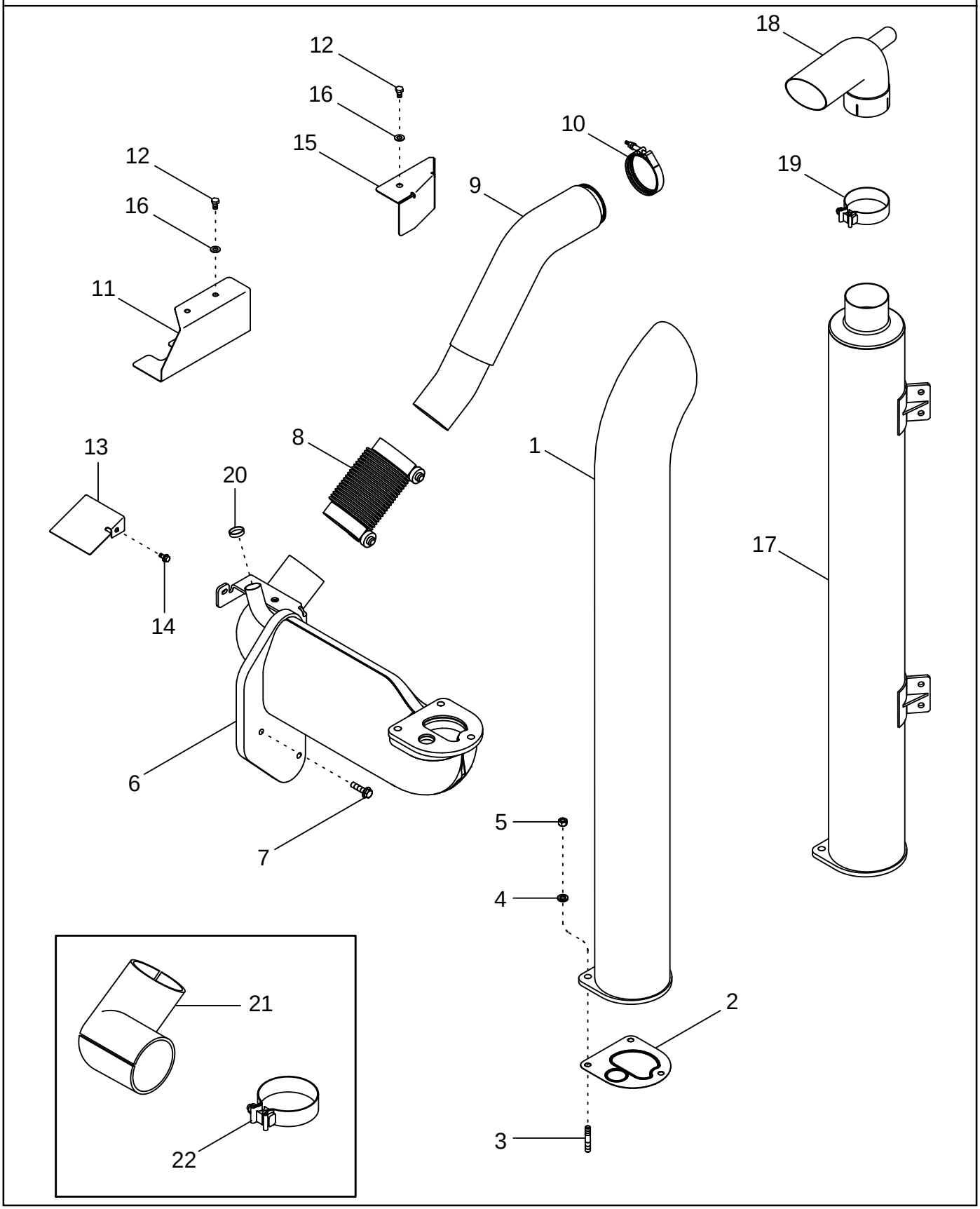

SISTEMA DE ESCAPE
SISTEMA DE ESCAPE
UITLAATSYSTEEM
UDSTØDNINGSSYSTEM

R	N	P.N.	MOD	Q	Description Denominacion	Descrizione Denominação	Description Beschrijving	Bezeichnung Beskrivelse	L.C.
1		255270A4		1	MUFFLER Standard SILENCIADOR	SILENZIATORE SILENCIADOR	SILENCIEUX KNALPOT	AUSPUFFTOPF LYDDÆMPER	5680
2		226775A1		1	GASKET JUNTA HERMETICA	GUARNIZIONE JUNTA	JOINT DICHTINGSSTUK	DICHTUNG, FLACH PAKNING	3720
3		387795A1		3	STUD PRISIONERO	PRIGIONIERO PERNE	GOUJON TAPEIND	STIFTSCHRAUBE STOETTEBOLT	8720
4		387798A1		3	WASHER ARANDELA	ROSETTA PIANA ANILHA	RONDELLE SLUITRING	SCHEIBE FLADSKIVE	9720
5		387796A1		3	NUT TUERCA	DADO PORCA	ECROU MOER	MUTTER MØTRIK	5780
6		318616A2		1	ELBOW CODO	GOMITO JOELHO	COUDE ELLEBOOG	KNIESTÜCK VINKELRØR	2940
7		828-12045		3	SCREW M12 x 45; 10.9 TORNILLO	VITE PARAFUSO	VIS SCHROEF	SCHRAUBE SKRUE	7450
8		242556A1		1	CONDUIT TUBERIA	CONDOTTA CONDUITE	CONDUIT CONDUIT	LEITUNG RENDE	1920
9	1, 2	442323A1		1	TUBE ASSY. TUBO (CONJUNTO)	TUBO, COMPLESSIVO TUBO CONJUNTO	TUYAUTERIE TUBE ASSY.	ROHRLEITUNG TUBE ASSY.	P465
9	3, 4	444052A1		1	TUBE ASSY. TUBO (CONJUNTO)	TUBO, COMPLESSIVO TUBO CONJUNTO	TUYAUTERIE TUBE ASSY.	ROHRLEITUNG TUBE ASSY.	P465
10		A170807		1	CLAMP Inc. Hardware BORNE	MORSETTO BORNE	BRIDE KLEM	KLEMME SPÆNDEBÅND	120M
11		251944A2		1	PROTECTION PLATE Starter CHAPA PROTECCION	PIASTRA, PROTETTIVA CHAPA PROTE O	TOLE-PROTECTION SHIELD	SCHUTZBLECH SHIELD	Z647
12		614-10016		2	SCREW M10 x 16 TORNILLO	VITE PARAFUSO	VIS SCHROEF	SCHRAUBE SKRUE	040V
13		299201A2		1	PROTECTION PLATE Brake Line CHAPA PROTECCION	PIASTRA, PROTETTIVA CHAPA PROTE O	TOLE-PROTECTION SHIELD	SCHUTZBLECH SHIELD	Z647
14		844-8016		1	SCREW M8 x 16; 8.8 TORNILLO	VITE PARAFUSO	VIS SCHROEF	SCHRAUBE SKRUE	7450
15		86983866		1	BRACKET PIEZA DE SOPORTE	STAFFA BRACADEIRA	PATTE FIXATION STEUNBEUGEL	HALTERUNG BESLAG	225S
16		844-10020		1	SCREW M10 x 20 TORNILLO	VITE PARAFUSO	VIS SCHROEF	SCHRAUBE SKRUE	7450
17		87416132		1	MUFFLER Severe Duty AUSPUFFTOPF	SILENZIATORE SILENCIADOR	SILENCIEUX KNALPOT	AUSPUFFTOPF LYDDÆMPER	160S
18		87416127		1	EXTENSION PROLONGACION	PROLUNGA EXTENSAO	RALLONGE VERLENGSTUK	VERLÄNGERUNG FORLÆNGNING	P416
19		131853A1		1	CLAMP BORNE	MORSETTO BORNE	BRIDE KLEM	KLEMME SPÆNDEBÅND	120M
20		41-1622		1	PLUG Used With Severe Duty Muffler TAPÓN	TAPPO BUJAO	BOUCHON PLUG	STOPFEN PROP	6400

(1) MX210
(2) MX230
(3) MX255
(4) MX285

02-08		p2	11/04

EXHAUST SYSTEM
IMPIANTO DI SCARICO
SYSTÈME D'ÉCHAPPEMENT
ABGASSYSTEM

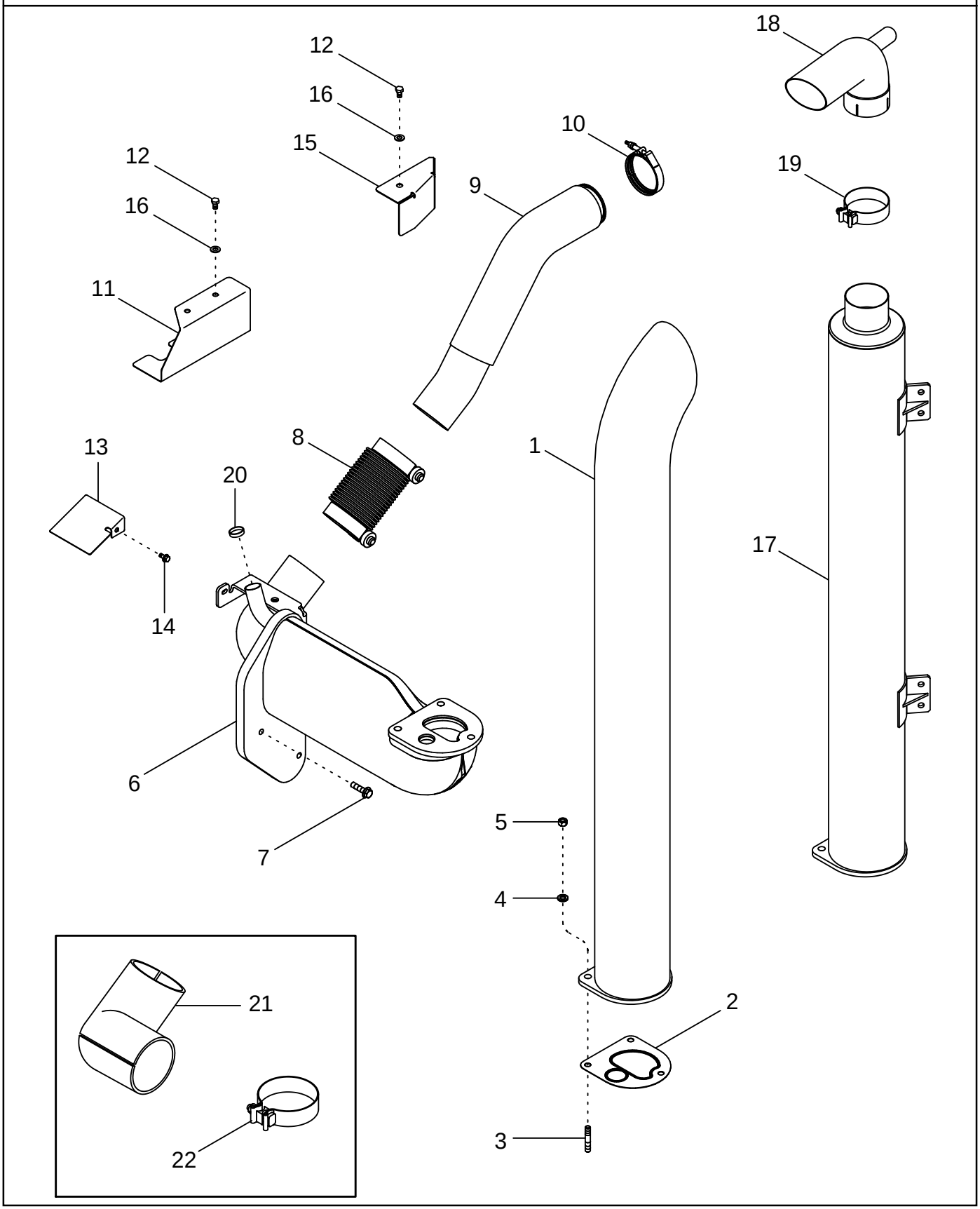

SISTEMA DE ESCAPE
SISTEMA DE ESCAPE
UITLAATSYSTEEM
UDSTØDNINGSSYSTEM

R	N	P.N.	MOD	Q	Description Denominacion	Descrizione Denominação	Description Beschrijving	Bezeichnung Beskrivelse	L.C.
		417631A1		1	KIT Exhaust Elbow Insulation, Inc. 21, 22				
						KIT	POCHETTE	PACKUNG	4830
					JEUGO	JOGO	KIT	KIT	
21		**414177A1**		1	INSULATOR Exhaust	ISOLANTE	ISOLANT	ISOLIERMATERIAL	4680
					AISLADOR	ISOLADOR	ISOLATIE,ALGEMEEN	ISOLATOR	
22		**86637711**		2	CLAMP	MORSETTO	COLLIER	SCHELLE	1640
					COLLAR	BRACADEIRA	CLAMP	CLAMP	

02-09		p1	11/04

ENGINE MOUNTING
SUPPORTO DEL MOTORE
MONTAGE DU MOTEUR
MOTORBEFESTIGUNG

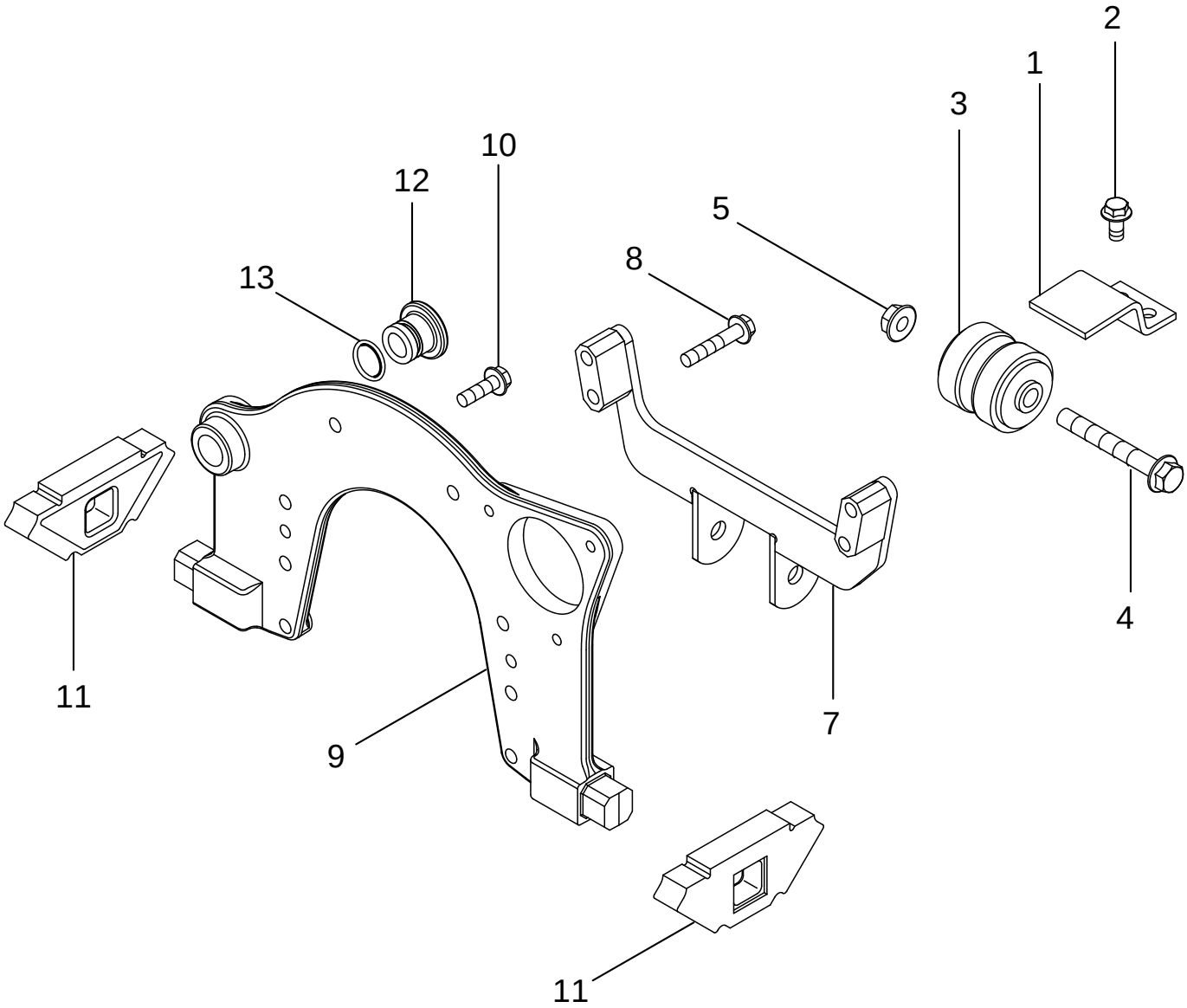

MONTAJE DEL MOTOR
SUPORTE DO MOTOR
MOTOROPHANGING
MOTORMONTERING

R	N	P.N.	MOD	Q	Description Denominacion	Descrizione Denominação	Description Beschrijving	Bezeichnung Beskrivelse	L.C.
1		297527A1		1	CLAMP TORNILLO DE SUJECTIC	MORSETTO BRACADEIRA	ATTACHE ASSEMBLEE CLAMP	KLEMME CLAMP	P489
2		844-12025		2	SCREW M12 x 25; 8.8 TORNILLO	VITE PARAFUSO	VIS SCHROEF	SCHRAUBE SKRUE	7450
3		247991A1		1	SHOCK ABSORBER AMORTIGUADOR	AMMORTIZZATORE AMORTECEDOR DE CHC	SILENTBLOC SHOCK ABSORBER	STOSSDAEMPFER SHOCK ABSORBER	P334
4		854-16120		1	SCREW M16 x 120; 10.9 TORNILLO	VITE PARAFUSO	VIS SCHROEF	SCHRAUBE SKRUE	7450
5		825-2416		1	NUT M16; 10.9 TUERCA	DADO PORCA	ECROU MOER	MUTTER MØTRIK	5780
7		252701A4		1	SUPPORT APOYADERO	SUPPORTO SUPORTE	SUPPORT SUPPORT	STUETZE SUPPORT	8790
8		854-12065		4	SCREW M12 x 65; 10.9 TORNILLO	VITE PARAFUSO	VIS SCHROEF	SCHRAUBE SKRUE	7450
9		250718A3		1	SUPPORT APOYADERO	SUPPORTO SUPORTE	SUPPORT SUPPORT	STUETZE SUPPORT	8790
10		854-12040		8	SCREW M12 x 40; 10.9 TORNILLO	VITE PARAFUSO	VIS SCHROEF	SCHRAUBE SKRUE	7450
11		251991A1		2	SUPPORT APOYADERO	SUPPORTO SUPORTE	SUPPORT SUPPORT	STUETZE SUPPORT	8790
12		J910248		1	PLUG TAPÓN	TAPPO BUJÃO	BOUCHON PLUG	STOPFEN PROP	050T
13		238-5212		1	O-RING 7/8 ID x 1/8 JUNTA HERMETICA	ANELLO TOROIDALE ANEL O	JOINT TORIQUE O-RING	O-RING O-RING	7176

02-10		p1	11/04

FLYWHEEL SHIELDS
PROTEZIONI DEL VOLANO
GARANTS DU VOLANT MOTEUR
SCHWUNGRADABDECKUNG

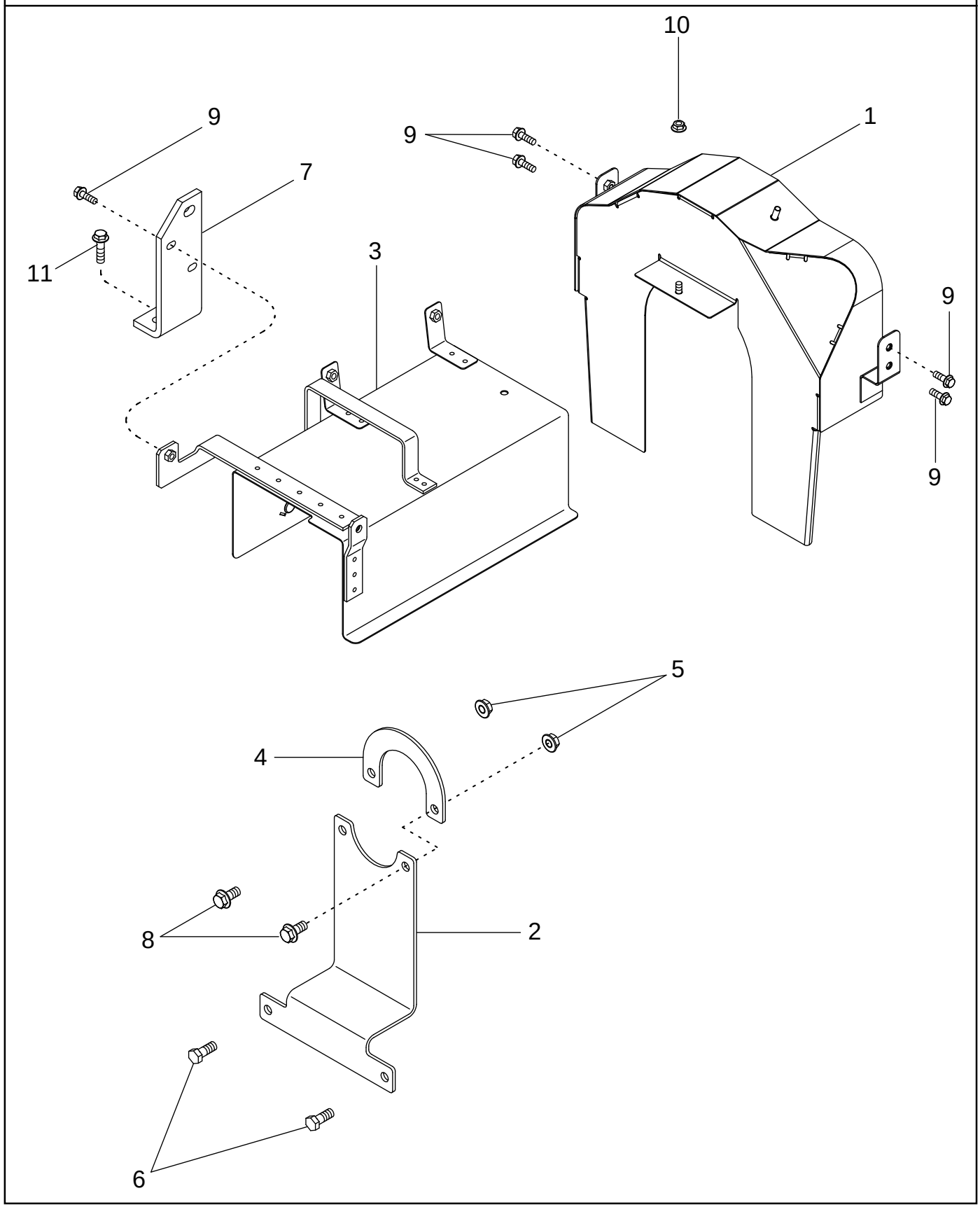

PROTECTORES DEL VOLANTE
PROTECÇÕES DO VOLANTE DO MOTOR
VLIEGWIELSCHERMEN
SVINGHJULSSKÆRME

R	N	P.N.	MOD	Q	Description Denominacion	Descrizione Denominação	Description Beschrijving	Bezeichnung Beskrivelse	L.C.
1		382150A1		1	PROTECTION PLATE CHAPA PROTECCION	PIASTRA, PROTETTIVA CHAPA PROTE O	TOLE-PROTECTION SHIELD	SCHUTZBLECH SHIELD	Z647
2		382147A1		1	PROTECTION PLATE CHAPA PROTECCION	PIASTRA, PROTETTIVA CHAPA PROTE O	TOLE-PROTECTION SHIELD	SCHUTZBLECH SHIELD	Z647
3		86984198		1	SHIELD, SPLASH GUARDABARRO, DELAN	PROTEZIONE, SPRUZZC PARALAMA	AILE PROTECTRICE SHIELD, SPLASH	SPRITZSCHUTZ SKÆRM, SPLASH	P776
4		382148A1		1	PROTECTION PLATE CHAPA PROTECCION	PIASTRA, PROTETTIVA CHAPA PROTE O	TOLE-PROTECTION SHIELD	SCHUTZBLECH SHIELD	Z647
5		9804279		2	NUT M12 TUERCA	DADO PORCA	ECROU MOER	MUTTER MØTRIK	010D
6		614-12030		2	SCREW M12 x 30; 8.8 TORNILLO	VITE PARAFUSO	VIS SCHROEF	SCHRAUBE SKRUE	P136
7		367682A1		1	BRACKET PIEZA DE SOPORTE	STAFFA SUPORTE	PATTE FIXATION STEUNBEUGEL	HALTERUNG BESLAG	1010
8		844-12025		2	SCREW M12 x 25; 8.8 TORNILLO	VITE PARAFUSO	VIS SCHROEF	SCHRAUBE SKRUE	7450
9		844-8025		5	SCREW M8 x 25; 8.8 TORNILLO	VITE PARAFUSO	VIS SCHROEF	SCHRAUBE SKRUE	7450
10		825-2408		1	NUT M8 TUERCA	DADO PORCA	ECROU MOER	MUTTER MØTRIK	5780
11		854-12035		2	SCREW M12 x 35; 10.9 TORNILLO	VITE PARAFUSO	VIS SCHROEF	SCHRAUBE SKRUE	7450

02-11		p1	11/04

WATER PUMP SYSTEM, MX210 AND MX230
IMPIANTO DELLA POMPA DELL'ACQUA, MX210 E MX230
CIRCUIT DE LA POMPE À EAU MX210 ET MX230
WASSERPUMPENSYSTEM DER SERIEN MX210 UND MX230

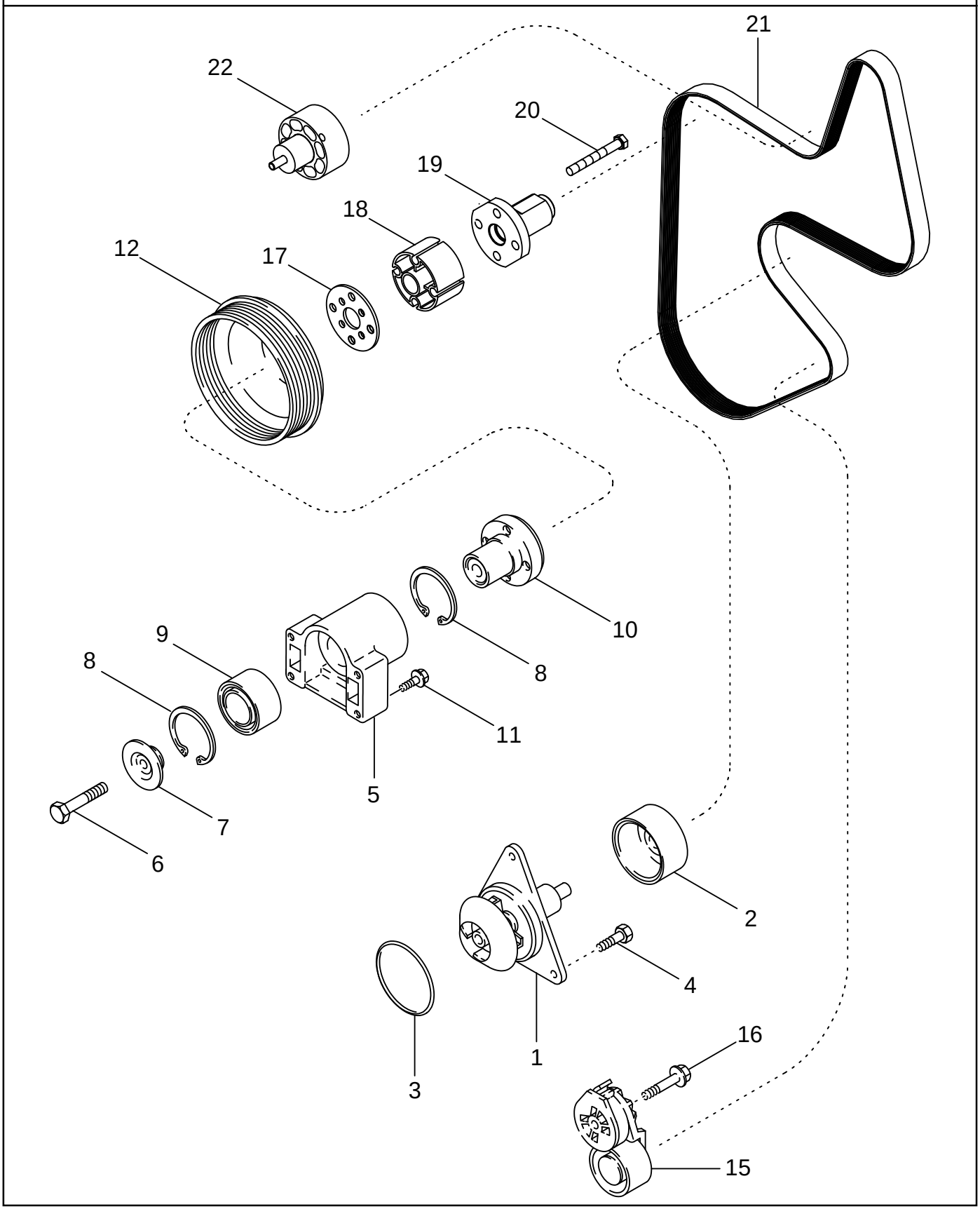

SISTEMA DE LA BOMBA DE AGUA, MX210 Y MX230
SISTEMA DA BOMBA DE ÁGUA, MODELOS MX210 E MX230
WATERPOMPSYSTEEM, MX210 EN MX230
VANDPUMPESYSTEM, MX210 OG MX230

R	N	P.N.	MOD	Q	Description Denominacion	Descrizione Denominação	Description Beschrijving	Bezeichnung Beskrivelse	L.C.
		J804927		1	PUMP, WATER Inc. 1 - 3 BOMBA DE AGUA	POMPA ACQUA BOMBA DE AGUA	POMPE A EAU WATERPOMP	WASSERPUMPE VANDPUMPE	152P
1		NSS		1	NOT SERVICED SEPARATELY Pump NO SE REPARA SEPARA	NON FORNITO SEPARAT NOT SERVICED SEPARA	NON FOURNI SEPAREMI NIET ALLEEN VERKRIJG	KEIN ERSATZTEIL NOT SERVICED SEPARA	064N
2		NSS		1	NOT SERVICED SEPARATELY Pulley NO SE REPARA SEPARA	NON FORNITO SEPARAT NOT SERVICED SEPARA	NON FOURNI SEPAREMI NIET ALLEEN VERKRIJG	KEIN ERSATZTEIL NOT SERVICED SEPARA	064N
3		238-5244		1	O-RING 4-1/4 ID x 4-1/2 OD JUNTA HERMETICA	ANELLO TOROIDALE ANEL O	JOINT TORIQUE O-RING	O-RING O-RING	7176
4		J934054		3	BOLT M8 x 28 TORNILLO	BULLONE PARAFUSO	BOULON BOUT	SCHAUBENBOLZEN SKRUE	140B
5		J942896		1	SUPPORT Inc. 6 - 10 APOYADERO	SUPPORTO SUPORTE	SUPPORT SUPPORT	STUETZE SUPPORT	8790
6		J907769		1	BOLT M10 x 70 TORNILLO	BULLONE PARAFUSO	BOULON BOUT	SCHAUBENBOLZEN SKRUE	140B
7		J923044		1	RETAINER RETENEDOR	RITEGNO RETENTOR	RETENEUR HOUDER	HALTEVORRICHTUNG HOLDER	109R
8		100-21250		2	RING, SNAP No. 250 ANILLO DE RESORTE	ANELLO ELASTICO ANEL	ANNEAU D'ARRÊT RING, SNAP	SICHERUNGSRING LÅSERING	054A
9		J910739		1	BEARING, BALL RODAMIENTO DE BOLAS	CUSCINETTO A SFERA ROLAMENTO	ROULEMENT A BILLES LAGER, KOGEL	KUGELLAGER KUGLELEJE	343C
10		J911924		1	HUB CUBO	MOZZO CUBO	MOYEU NAAF	NABE NAV	135M
11		844-10050		4	SCREW M10 x 50 TORNILLO	VITE PARAFUSO	VIS SCHROEF	SCHRAUBE SKRUE	P136
12		J926855		1	PULLEY POLEA	PULEGGIA POLIE	POULIE RIEMSCHIJF	RIEMENSCHEIBE REMSKIVE	230P
15		87409564		1	TENSIONER, BELT TENSOR DE CORREA	TENDICINGHIA TENSOR DE CORREIA	TENDEUR DE COURROI RIEMSPANNER	RIEMENSPANNER REMSTRAMMER	087T
16		J282433		1	BOLT M10 x 85 TORNILLO	BULLONE PARAFUSO	BOULON BOUT	SCHAUBENBOLZEN SKRUE	140B
17		J915490		1	PLATE PLACA	PIASTRA CHAPA	PLAQUE PLAAT	PLATTE PLADE	105P
18		D142327		1	GEAR, WHEEL RUEDA DENTADA	RUOTA DENTATA RODA DENTADA	ROUE-DENTEE GEAR-WHEEL	ZAHNRAD GEAR-WHEEL	Z624
19		428359A3		1	SHAFT Fan Adapter EJE	ALBERO VEIO	ARBRE AS	WELLE AKSEL	016A
20		844-10080		4	SCREW M10 x 80; 8.8 TORNILLO	VITE PARAFUSO	VIS SCHROEF	SCHRAUBE SKRUE	7450
21		87402830		1	BELT CORREA	CINGHIA CORREIA	COURROIE RIEMEN	RIEMEN REM	174C
22		440140A1		1	PULLEY ASSY. Idler POLEA (CONJUNTO)	GRUPPO PULEGGIA POLIA CONJUNTO	POULIE (ASSEMBLEE) PULLEY ASSY.	RIEMENSCHEIBE (KPLT. PULLEY ASSY.	P501

02-12		p1	11/04

WATER PUMP SYSTEM, MX255 AND MX285
IMPIANTO DELLA POMPA DELL'ACQUA, MX255 E MX285
CIRCUIT DE LA POMPE À EAU MX255 ET MX285
WASSERPUMPENSYSTEM DER SERIEN MX255 UND MX285

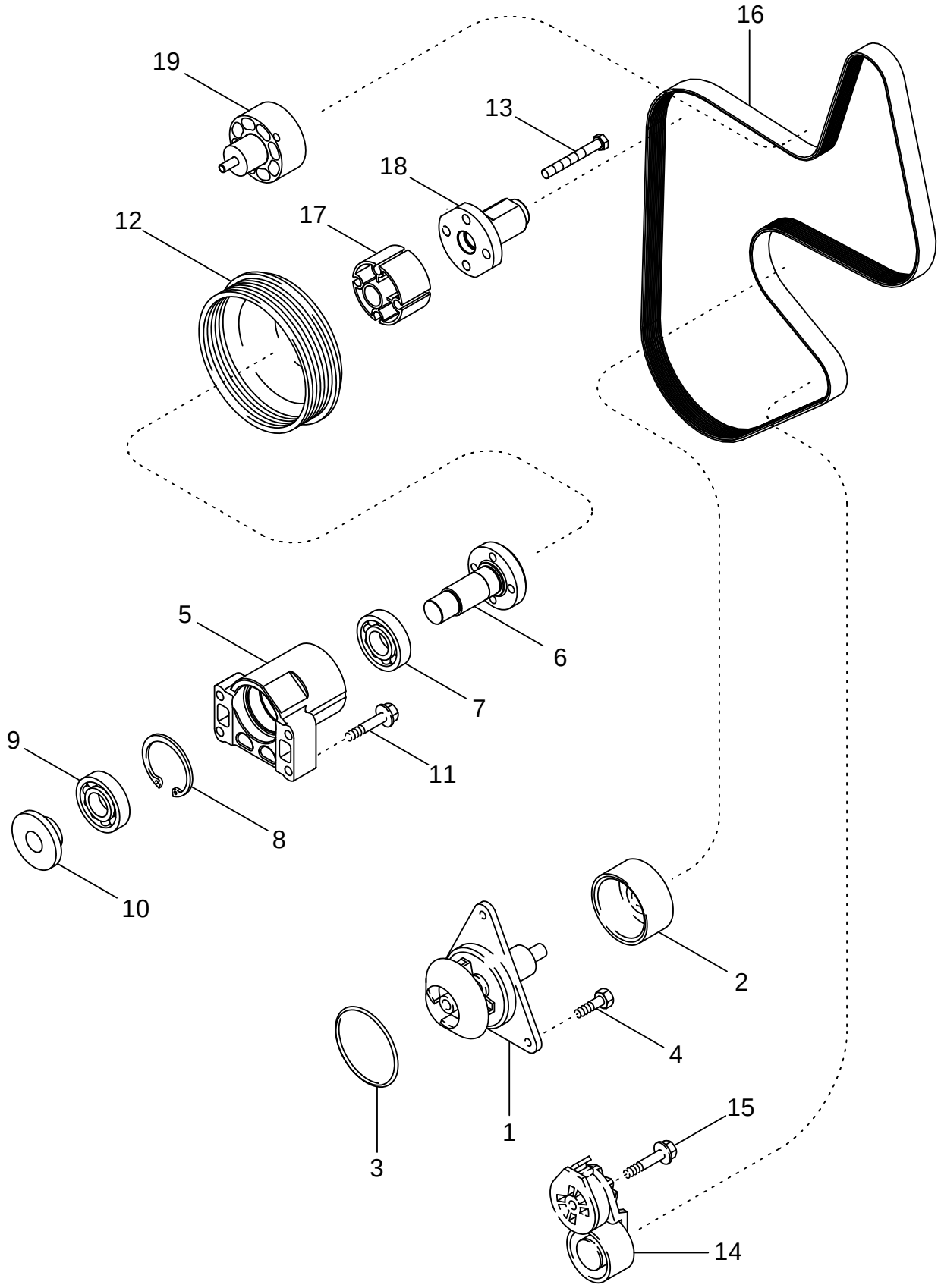

SISTEMA DE LA BOMBA DE AGUA, MX255 Y MX285
SISTEMA DA BOMBA DE ÁGUA, MODELOS MX255 E MX285
WATERPOMPSYSTEEM, MX255 EN MX285
VANDPUMPESYSTEM, MX255 OG MX285

R	N	P.N.	MOD	Q	Description Denominacion	Descrizione Denominação	Description Beschrijving	Bezeichnung Beskrivelse	L.C.
		J804927		1	PUMP, WATER Water Pump, Inc.1 - 3				
						POMPA ACQUA	POMPE A EAU	WASSERPUMPE	152P
					BOMBA DE AGUA	BOMBA DE AGUA	WATERPOMP	VANDPUMPE	
1		NSS		1	NOT SERVICED SEPARATELY Pump				
						NON FORNITO SEPARAT	NON FOURNI SEPAREMI	KEIN ERSATZTEIL	064N
					NO SE REPARA SEPARA	NOT SERVICED SEPARA	NIET ALLEEN VERKRIJG	NOT SERVICED SEPARA	
2		NSS		1	NOT SERVICED SEPARATELY Pulley				
						NON FORNITO SEPARAT	NON FOURNI SEPAREMI	KEIN ERSATZTEIL	064N
					NO SE REPARA SEPARA	NOT SERVICED SEPARA	NIET ALLEEN VERKRIJG	NOT SERVICED SEPARA	
3		238-5244		1	O-RING 4-1/4 ID x 4-1/2 OD	ANELLO TOROIDALE	JOINT TORIQUE	O-RING	7176
					JUNTA HERMETICA	ANEL O	O-RING	O-RING	
4		J934054		3	BOLT M8 x 28	BULLONE	BOULON	SCHAUBENBOLZEN	140B
					TORNILLO	PARAFUSO	BOUT	SKRUE	
		J945330		1	SUPPORT Inc. 5 - 10	SUPPORTO	SUPPORT	STÜTZE	300S
					SOPORTE	SUPORTE	STEUN	BESLAG	
5		NSS		1	NOT SERVICED SEPARATELY Support				
						NON FORNITO SEPARAT	NON FOURNI SEPAREMI	KEIN ERSATZTEIL	064N
					NO SE REPARA SEPARA	NOT SERVICED SEPARA	NIET ALLEEN VERKRIJG	NOT SERVICED SEPARA	
6		J934104		1	HUB	MOZZO	MOYEU	NABE	135M
					CUBO	CUBO	NAAF	NAV	
7		J933441		1	BEARING, BALL	CUSCINETTO A SFERA	ROULEMENT A BILLES	KUGELLAGER	343C
					RODAMIENTO DE BOLAS	ROLAMENTO	LAGER, KOGEL	KUGLELEJE	
8		100-21244		1	RING, SNAP No. 244	ANELLO ELASTICO	ANNEAU D'ARRÊT	SICHERUNGSRING	054A
					ANILLO DE RESORTE	ANEL	RING, SNAP	LÅSERING	
9		J933440		1	BEARING, BALL	CUSCINETTO A SFERA	ROULEMENT A BILLES	KUGELLAGER	343C
					RODAMIENTO DE BOLAS	ROLAMENTO	LAGER, KOGEL	KUGLELEJE	
10		J931016		1	RETAINER	RITEGNO	RETENEUR	HALTEVORRICHTUNG	109R
					RETENEDOR	RETENTOR	HOUDER	HOLDER	
11		844-10050		4	SCREW M10 x 50	VITE	VIS	SCHRAUBE	P136
					TORNILLO	PARAFUSO	SCHROEF	SKRUE	
12		J914462		1	PULLEY	PULEGGIA	POULIE	RIEMENSCHEIBE	230P
					POLEA	POLIE	RIEMSCHIJF	REMSKIVE	
13		844-10080		4	SCREW M10 x 80; 8.8	VITE	VIS	SCHRAUBE	7450
					TORNILLO	PARAFUSO	SCHROEF	SKRUE	
14		87409564		1	TENSIONER, BELT	TENDICINGHIA	TENDEUR DE COURROI	RIEMENSPANNER	087T
					TENSOR DE CORREA	TENSOR DE CORREIA	RIEMSPANNER	REMSTRAMMER	
15		J282433		1	BOLT M10 x 85	BULLONE	BOULON	SCHAUBENBOLZEN	140B
					TORNILLO	PARAFUSO	BOUT	SKRUE	
16		87402831		1	BELT	CINGHIA	COURROIE	RIEMEN	174C
					CORREA	CORREIA	RIEMEN	REM	
17		D142327		1	GEAR, WHEEL	RUOTA DENTATA	ROUE-DENTEE	ZAHNRAD	Z624
					RUEDA DENTADA	RODA DENTADA	GEAR-WHEEL	GEAR-WHEEL	
18		446890A1		1	SHAFT Fan Adapter	ALBERO	ARBRE	WELLE	016A
					EJE	VEIO	AS	AKSEL	
19		440140A1		1	PULLEY ASSY. Idler	GRUPPO PULEGGIA	POULIE (ASSEMBLEE)	RIEMENSCHEIBE (KPLT.	P501
					POLEA (CONJUNTO)	POLIA CONJUNTO	PULLEY ASSY.	PULLEY ASSY.	

FRONT GEAR COVER, MX210 AND MX230
COPERCHIO DELL'INGRANAGGIO ANTERIORE, MX210 E MX230
COUVERCLE DU PIGNON AVANT, MX210 ET MX230
FRONTGETRIEBEABDECKUNG DER SERIEN MX210 UND MX230

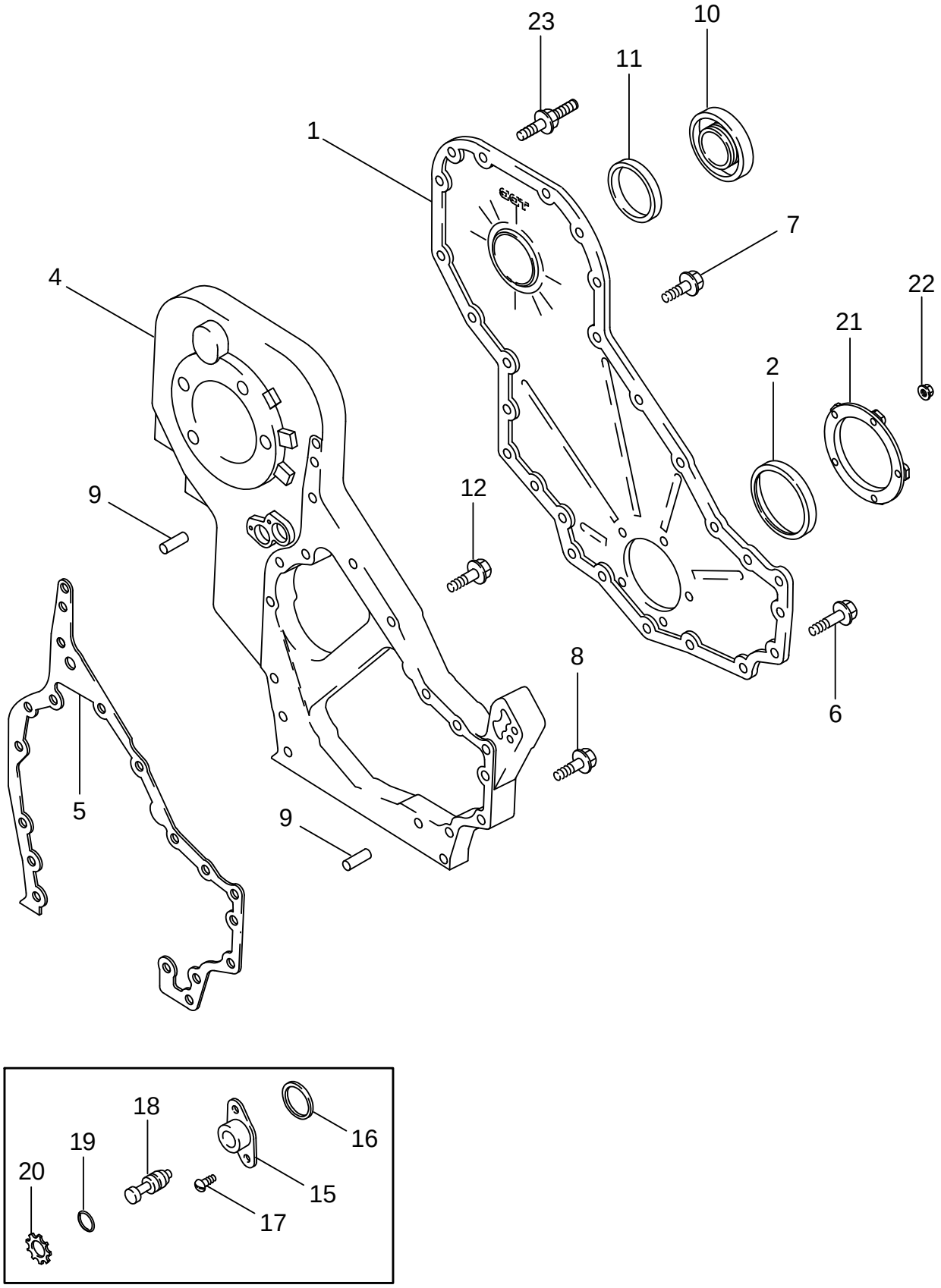

CUBIERTA DEL ENGRANAJE DELANTERO, MX210 Y MX230
COBERTURA DA ENGRENAGEM DIANTEIRA, MODELOS MX210 E MX230
KLEPPENDEKSEL VOOR, MX210 EN MX230
FORGEARSDÆKSEL, MX210 OG MX230

R	N	P.N.	MOD	Q	Description Denominacion	Descrizione Denominação	Description Beschrijving	Bezeichnung Beskrivelse	L.C.
1		J948043		1	COVER TAPADERA	COPERCHIO COBERTA	COUVERCLE DEKSEL	DECKEL DÆKSEL	265C
2	1	NSS		1	NOT SERVICED SEPARATELY Seal, Order A77790, A77808				
					NO SE REPARA SEPARA	NON FORNITO SEPARAT NOT SERVICED SEPARA	NON FOURNI SEPAREMI NIET ALLEEN VERKRIJG	KEIN ERSATZTEIL NOT SERVICED SEPARA	064N
3		J823494		1	SEALANT 3 oz, Not Illustrated				
					SELLADOR	SIGILLANTE VEDANTE	PRODUIT D'ETANCHEITI DICHTINGSPRODUKT	DICHTUNGMASSE TÆTNINGSMASSE	405S
4		86992925		1	TRANSMISSION HOUSING				
					CAJA ENGRANAJE	CAMBIO deTRASMISSIOI CAIXA DE TRANSMISSA(	CARTER, ENGRANGE TRANSMISSIEHUIS	GETRIEBEGEHÄUSE BAGTOEJSHUS	404S
5		J944293		1	GASKET JUNTA HERMETICA	GUARNIZIONE JUNTA	JOINT DICHTINGSSTUK	DICHTUNG, FLACH PAKNING	123G
6		J926863		12	BOLT M8 x 50 TORNILLO	BULLONE PARAFUSO	BOULON BOUT	SCHAUBENBOLZEN SKRUE	140B
7		845-8016		14	SCREW M8 x 16; 8.8 TORNILLO	VITE PARAFUSO	VIS SCHROEF	SCHRAUBE SKRUE	7450
8		J926846		3	BOLT M8 x 20 TORNILLO	BULLONE PARAFUSO	BOULON BOUT	SCHAUBENBOLZEN SKRUE	140B
9		J900257		2	PIN 16 mm PERNO	PERNO PERNO	AXE PEN	BOLZEN STIFT	080P
10		J903463		1	COVER TAPADERA	COPERCHIO COBERTA	COUVERCLE DEKSEL	DECKEL DÆKSEL	265C
11		J903475		1	SEAL ANILLO DE CIERRE	ANELLO DI TENUTA ANEL DE VEDACAO	JOINT DICHTINGSRING	DICHTUNG PAKNINGSRING	132A
12		J943885		2	BOLT M8 x 40 TORNILLO	BULLONE PARAFUSO	BOULON BOUT	SCHAUBENBOLZEN SKRUE	140B
15		J919683		1	HOUSING CAVIDAD	ALLOGGIAMENTO ALOJAMENTO	CARTER HUIS	GEHÄUSE HUS	014V
16		J915772		1	SEALRING RETEN	ANELLO, GUARNIZIONE ANEL VEDADOR	JOINT ANNULAIRE SEALRING	LIPPENDICHTING SEALRING	Z125
17		J907998		2	SCREW M5 x 17 TORNILLO	VITE PARAFUSO	VIS SCHROEF	SCHRAUBE SKRUE	040V
18		J903924		1	PIN PERNO	PERNO PERNO	AXE PEN	BOLZEN STIFT	080P
19		J913994		1	O-RING JUNTA HERMETICA	ANELLO TOROIDALE O-RING	JOINT THORIQUE O-RING	DICHTRING O-RING	055A
20		100-2587		1	CIRCLIP No. 87 RETENEDOR	ANELLO DI RITEGNO FREIO DE MOLA	CIRCLIP BORGVEER	HALTERING LAASERING	056A
21		J941786		1	CARRIER EJE DE SATELITES	PORTASATELLITI PORTA-SATELITES	PILIER, SOUTIEN SATELIETDRAGER	PLANETENTRÄGER SPIDSHJULSHOLDER	196P
22		J938077		5	NUT Lock, M6 TUERCA	DADO PORCA	ECROU MOER	MUTTER MØTRIK	010D
23		J921816		2	BOLT, SPECIAL PERNO ESPECIAL	BULLONE SPECIALE PARAFUSO ESPECIAL	BOULON SPECIAL BOLT, SPECIAL	SPEZIALSCHRAUBE BOLT, SPECIAL	P698

(1) See Figure 02-40

FRONT GEAR COVER, MX255 AND MX285
COPERCHIO DELL'INGRANAGGIO ANTERIORE, MX255 E MX285
COUVERCLE DU PIGNON AVANT, MX255 ET MX285
FRONTGETRIEBEABDECKUNG DER SERIEN MX255 UND MX285

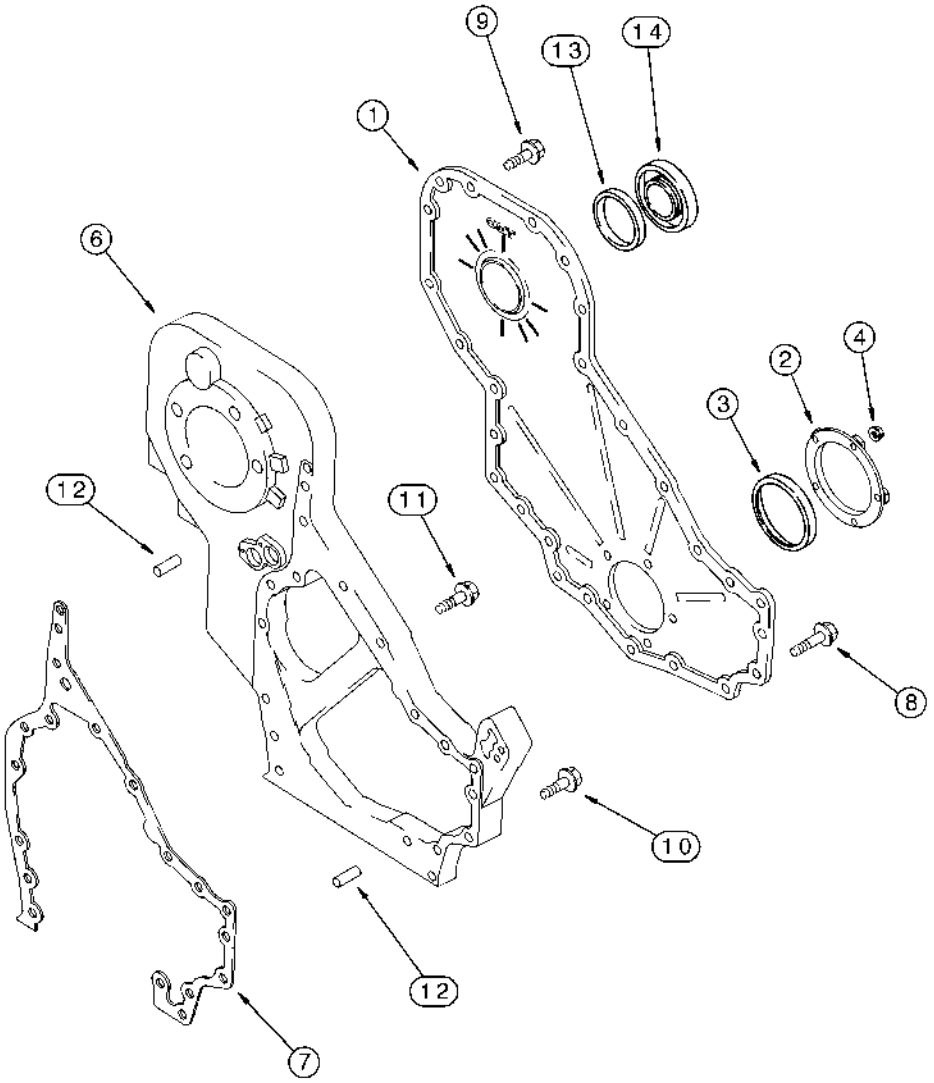

CUBIERTA DEL ENGRANAJE DELANTERO, MX255 Y MX285
COBERTURA DA ENGRENAGEM DIANTEIRA, MODELOS MX255 E MX285
KLEPPENDEKSEL VOOR, MX255 EN MX285
FORGEARSDÆKSEL, MX255 OG MX285

R	N	P.N.	MOD	Q	Description Denominacion	Descrizione Denominação	Description Beschrijving	Bezeichnung Beskrivelse	L.C.
1		J948043		1	COVER TAPADERA	COPERCHIO COBERTA	COUVERCLE DEKSEL	DECKEL DÆKSEL	265C
2		J941786		1	CARRIER EJE DE SATELITES	PORTASATELLITI PORTA-SATELITES	PILIER, SOUTIEN SATELIETDRAGER	PLANETENTRÄGER SPIDSHJULSHOLDER	196P
3	1	NSS		1	NOT SERVICED SEPARATELY Seal, Order A77790, A77808 NO SE REPARA SEPARA	NON FORNITO SEPARAT NOT SERVICED SEPARA	NON FOURNI SEPAREMI NIET ALLEEN VERKRIJG	KEIN ERSATZTEIL NOT SERVICED SEPARA	064N
4		J938077		5	NUT M6 TUERCA	DADO PORCA	ECROU MOER	MUTTER MØTRIK	010D
5		J823494		1	SEALANT 3 oz, Not Illustrated SELLADOR	SIGILLANTE VEDANTE	PRODUIT D'ETANCHEITE DICHTINGSPRODUKT	DICHTUNGMASSE TÆTNINGSMASSE	405S
6		J945852		1	TRANSMISSION HOUSING CAJA ENGRANAJE	CAMBIO deTRASMISSIOI CAIXA DE TRANSMISSA(	CARTER, ENGRANGE TRANSMISSIEHUIS	GETRIEBEGEHÄUSE BAGTOEJSHUS	404S
7		J944293		1	GASKET JUNTA HERMETICA	GUARNIZIONE JUNTA	JOINT DICHTINGSSTUK	DICHTUNG, FLACH PAKNING	123G
8		J926863		12	BOLT M8 x 50 TORNILLO	BULLONE PARAFUSO	BOULON BOUT	SCHAUBENBOLZEN SKRUE	140B
9		845-8016		14	SCREW M8 x 16; 8.8 TORNILLO	VITE PARAFUSO	VIS SCHROEF	SCHRAUBE SKRUE	7450
10		J926846		3	BOLT M8 x 20 TORNILLO	BULLONE PARAFUSO	BOULON BOUT	SCHAUBENBOLZEN SKRUE	140B
11		J943885		4	BOLT M8 x 40 TORNILLO	BULLONE PARAFUSO	BOULON BOUT	SCHAUBENBOLZEN SKRUE	140B
12		J900257		2	PIN 16 mm PERNO	PERNO PERNO	AXE PEN	BOLZEN STIFT	080P
13		J903475		1	SEAL ANILLO DE CIERRE	ANELLO DI TENUTA ANEL DE VEDACAO	JOINT DICHTINGSRING	DICHTUNG PAKNINGSRING	132A
14		J903463		1	COVER TAPADERA	COPERCHIO COBERTA	COUVERCLE DEKSEL	DECKEL DÆKSEL	265C

(1) See Figure 02-40

MANIFOLDS, MX210 AND MX230
COLLETTORI, MX210 E MX230
COLLECTEURS, MX210 ET MX230
VERTEILER DER SERIEN MX210 UND MX230

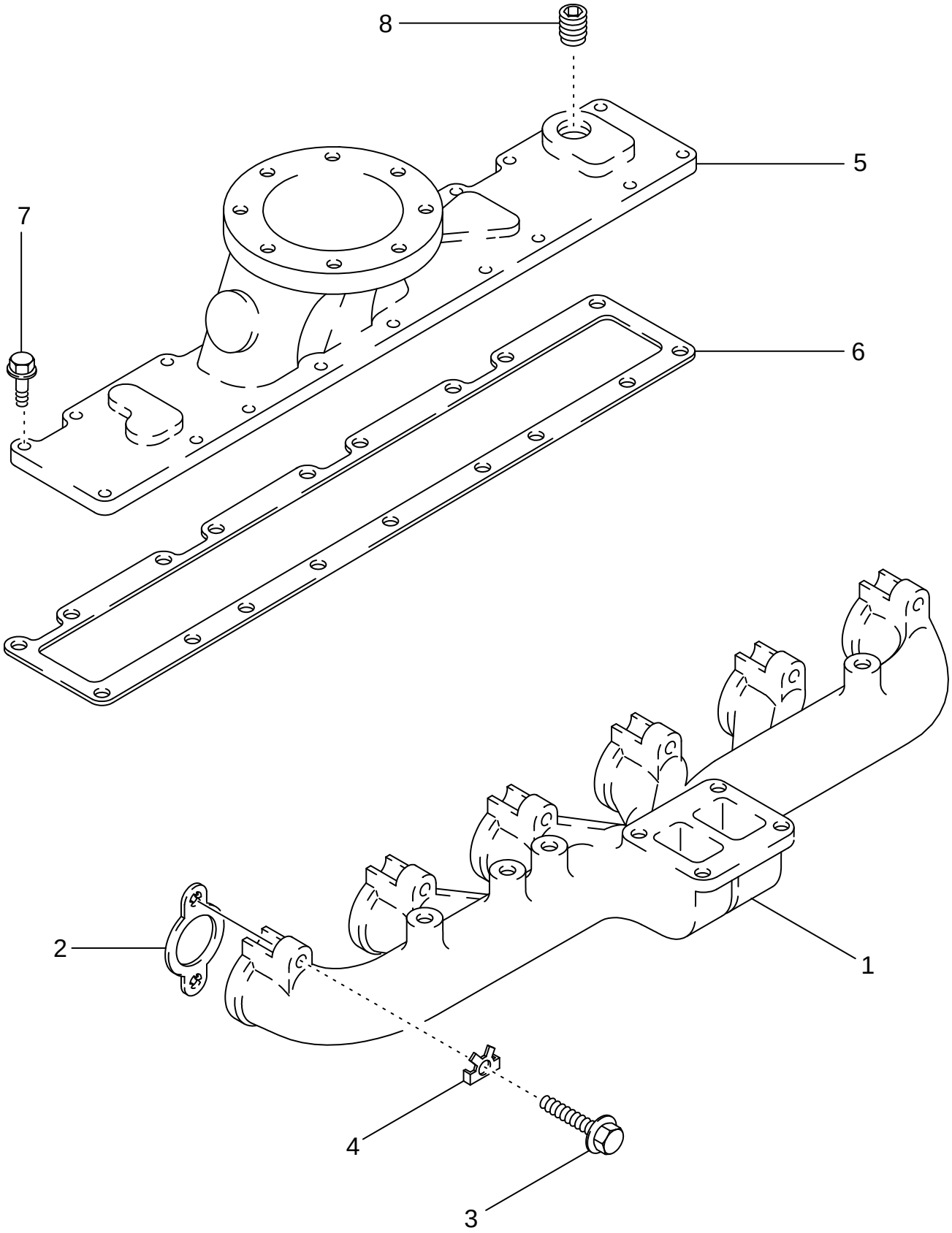

BLOQUES DE DISTRIBUCIÓN, MX210 Y MX230
TUBOS DE DISTRIBUIÇÃO, MODELOS MX210 E MX230
SPRUITSTUKKEN, MX210 EN MX230
MANIFOLDS, MX210 OG MX230

R	N	P.N.	MOD	Q	Description Denominacion	Descrizione Denominação	Description Beschrijving	Bezeichnung Beskrivelse	L.C.
1		87405601		1	MANIFOLD Exhaust COLECTOR	COLLETTORE COLECTOR	COLLECTEUR MANIFOLD	KRÜMMER VERDEELSTUK	198C
2		J932063		6	GASKET, MANIFOLD JUNTA COLECTOR	GUARNIZIONE COLLETT JUNTA COLECTOR	JOINT DE COLLECTEUR DICHTING, SPRUITSTUK	KRÜMMERDICHTUNG MINIFOLD PAKNING	125G
3		J929537		12	BOLT 10 x 70 mm TORNILLO	BULLONE PARAFUSO	BOULON BOUT	SCHAUBENBOLZEN SKRUE	140B
4		J914708		12	PLATE, LOCKING Intake PLACA DE FRENO	PIASTRINA DI SICUREZZ CHAPA DE SEGURANCA	PLAQUE D'ARRÊT BORGPLAAT	VERSCHLUSSBLECH LÅSEPLADE	113P
5		J926044		1	COVER TAPADERA	COPERCHIO COBERTA	COUVERCLE DEKSEL	DECKEL DÆKSEL	265C
6		J936993		1	GASKET, MANIFOLD JUNTA COLECTOR	GUARNIZIONE COLLETT JUNTA COLECTOR	JOINT DE COLLECTEUR DICHTING, SPRUITSTUK	KRÜMMERDICHTUNG MINIFOLD PAKNING	125G
7		J938036		18	SCREW M8 x 30 TORNILLO	VITE PARAFUSO	VIS SCHROEF	SCHRAUBE SKRUE	040V
8		217-438		1	PLUG 1/2 PT TAPÓN	TAPPO BUJÃO	BOUCHON PLUG	STOPFEN PROP	050T

MANIFOLDS, MX255 AND MX285
COLLETTORI, MX255 E MX285
COLLECTEURS, MX255 ET MX285
VERTEILER DER SERIEN MX255 UND MX285

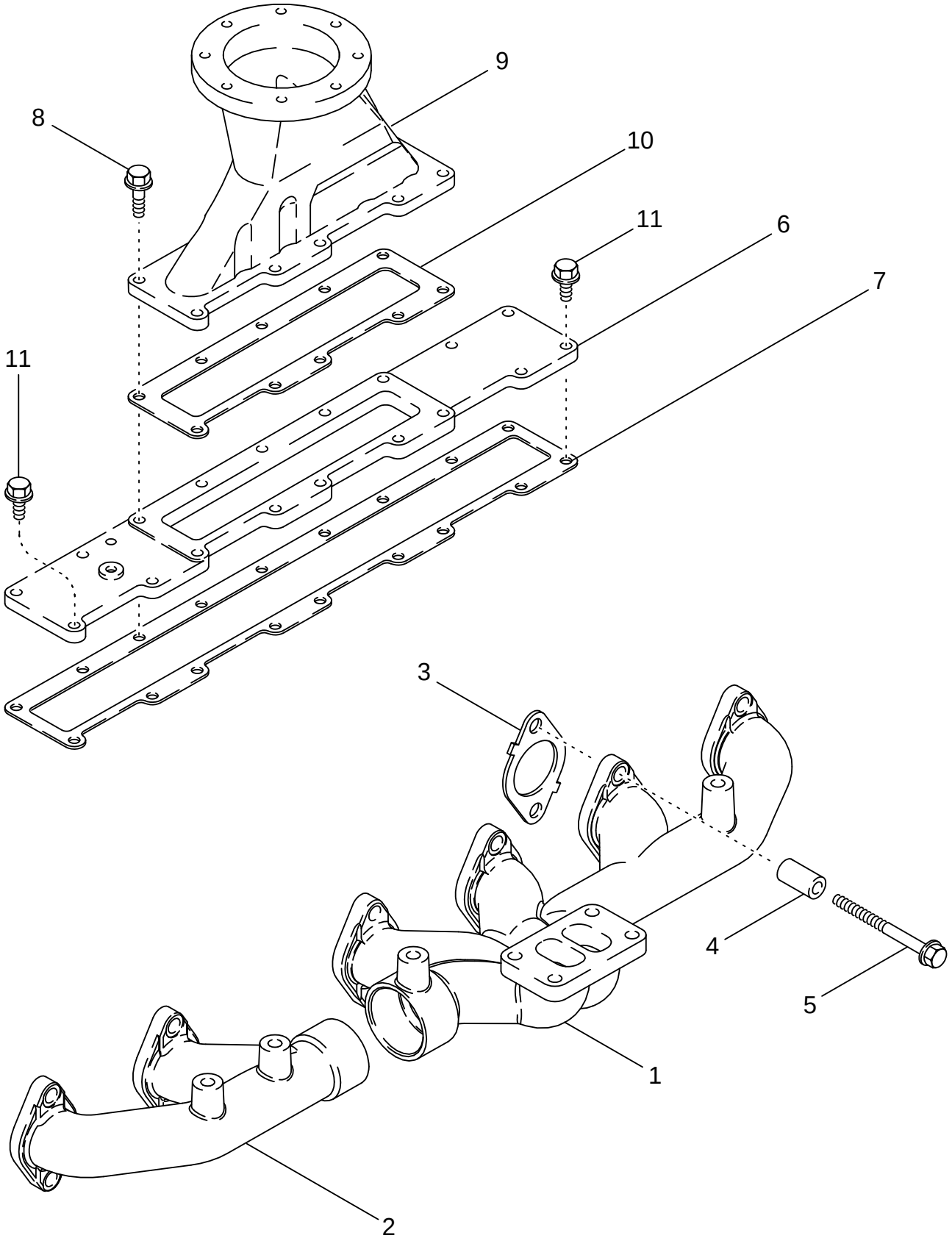

BLOQUES DE DISTRIBUCIÓN, MX255 Y MX285
TUBOS DE DISTRIBUIÇÃO, MODELOS MX255 E MX285
SPRUITSTUKKEN, MX255 EN MX285
MANIFOLDS, MX255 OG MX285

R	N	P.N.	MOD	Q	Description Denominacion	Descrizione Denominação	Description Beschrijving	Bezeichnung Beskrivelse	L.C.
1		J943841		1	MANIFOLD, EXHAUST Exhaust				
						CONDOTTO DI SCARICC	CONDUIT D'ECHAPPEMI	AUSPUFFVERTEILER	230C
					COLECTOR DE ESCAPE	COLECTOR DE ESCAPE	UITLAATBUIS	UDSTOEDNINGSMANIFC	
2		J937477		1	MANIFOLD	COLLETTORE	COLLECTEUR	KRÜMMER	198C
					COLECTOR	COLECTOR	MANIFOLD	VERDEELSTUK	
3		J937479		6	GASKET, MANIFOLD	GUARNIZIONE COLLETT	JOINT DE COLLECTEUR	KRÜMMERDICHTUNG	125G
					JUNTA COLECTOR	JUNTA COLECTOR	DICHTING, SPRUITSTUK	MINIFOLD PAKNING	
4		J945252		12	SPACER 35 mm (1-3/8 in)	DISTANZIALE	ENTRETOISE	DISTANZSTÜCK	075D
					SEPARADOR	ESPACADOR	AFSTANDSRING	AFSTANDSSTYKKE	
5		J944593		12	BOLT M8 x 165	BULLONE	BOULON	SCHAUBENBOLZEN	140B
					TORNILLO	PARAFUSO	BOUT	SKRUE	
6		J944342		1	BODY Intake	CORPO	CORPS	KÖRPER	0780
					CUERPO	CORPO	LICHAAM	HUS	
7		J944646		1	GASKET, MANIFOLD	GUARNIZIONE COLLETT	JOINT DE COLLECTEUR	KRÜMMERDICHTUNG	125G
					JUNTA COLECTOR	JUNTA COLECTOR	DICHTING, SPRUITSTUK	MINIFOLD PAKNING	
8		844-8040		10	SCREW M8 x 40; 8.8	VITE	VIS	SCHRAUBE	7450
					TORNILLO	PARAFUSO	SCHROEF	SKRUE	
9		J943613		1	CONNECTOR, HYD.	RACCORDO IDRAULICO	RACCORD	STUTZEN	020R
					RACOR	CONECTOR	VERBINDING	FORSKRUNING	
10		J944647		1	GASKET	GUARNIZIONE	JOINT	DICHTUNG, FLACH	123G
					JUNTA HERMETICA	JUNTA	DICHTINGSSTUK	PAKNING	
11		844-8030		3	SCREW M8 x 30; 8.8	VITE	VIS	SCHRAUBE	040V
					TORNILLO	PARAFUSO	SCHROEF	SKRUE	

TURBOCHARGER SYSTEM, MX210 AND MX230
IMPIANTO DEL TURBOCOMPRESSORE, MX210 E MX230
CIRCUIT DU TURBOCOMPRESSEUR, MX210 ET MX230
TURBOLADERSYSTEM DER SERIEN MX210 UND MX230

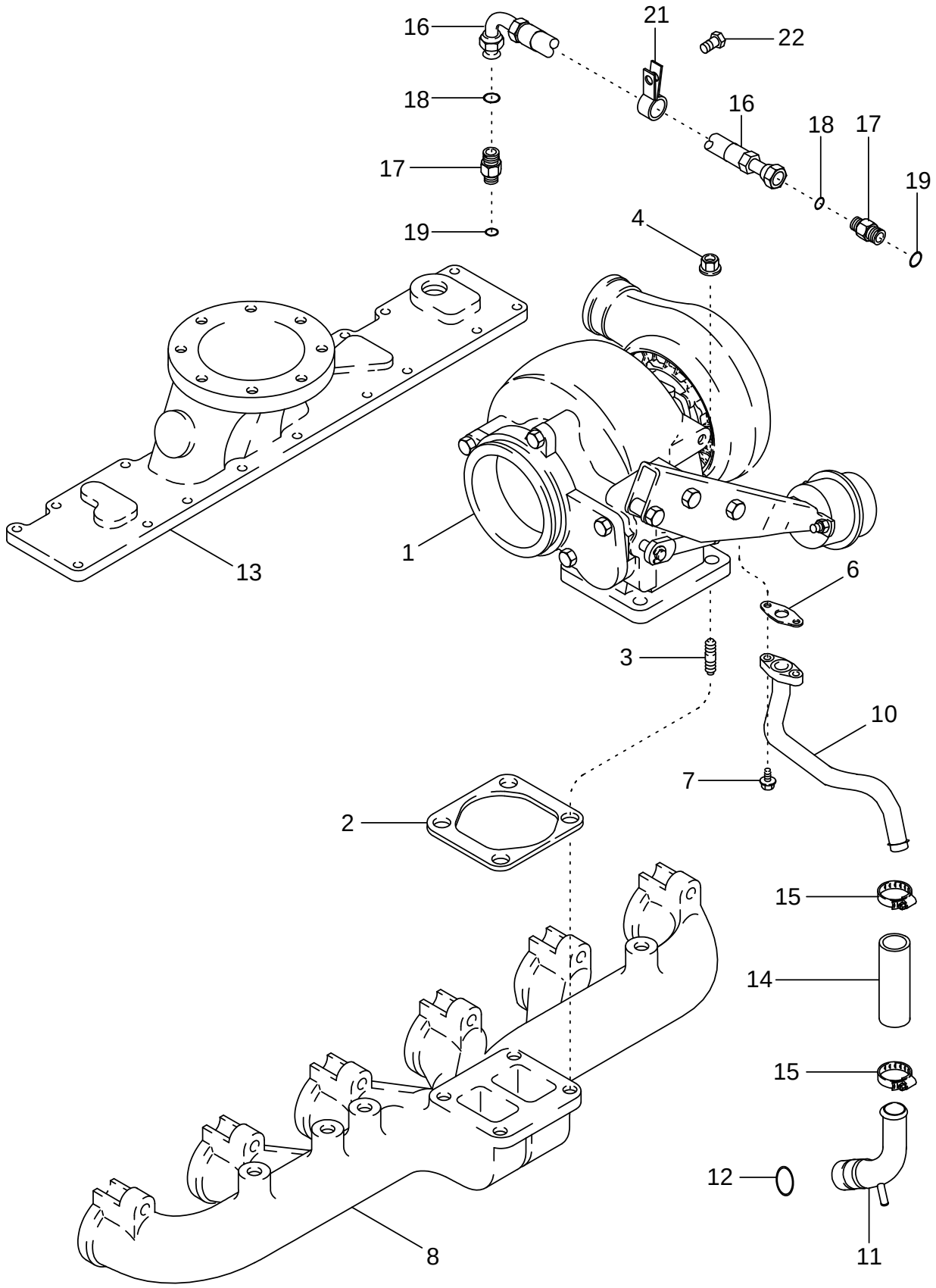

SISTEMA DEL TURBOCARGADOR, MX210 Y MX230
SISTEMA DO TURBOCOMPRESSOR, MODELOS MX210 E MX230
TURBOLADERSYSTEEM, MX210 EN MX230
TURBOLADERSYSTEM, MX210 OG MX230

R	N	P.N.	MOD	Q	Description Denominacion	Descrizione Denominação	Description Beschrijving	Bezeichnung Beskrivelse	L.C.
1	1	REF		1	INSTRUCTION Turbocharger Assy				
						ISTRUZIONI	NOTICE	HINWEIS	Z571
					MANUAL	INSTRUCAO	INSTRUCTION	SKO, INDRE	
2		J911941		1	GASKET	GUARNIZIONE	JOINT	DICHTUNG, FLACH	123G
					JUNTA HERMETICA	JUNTA	DICHTINGSSTUK	PAKNING	
3		J818823		4	STUD M10 x 40	PRIGIONIERO	GOUJON	STEHBOLZEN	210P
					PRISIONERO	PERNE	TAPEIND	STOETTEBOLT	
4		J818824		4	NUT M10	DADO	ECROU	MUTTER	010D
					TUERCA	PORCA	MOER	MØTRIK	
6		J755843		1	GASKET	GUARNIZIONE	JOINT	DICHTUNG, FLACH	123G
					JUNTA HERMETICA	JUNTA	DICHTINGSSTUK	PAKNING	
7		845-8020		2	SCREW M8 x 20; 8.8	VITE	VIS	SCHRAUBE	7450
					TORNILLO	PARAFUSO	SCHROEF	SKRUE	
8	2	87405601		1	MANIFOLD	COLLETTORE	COLLECTEUR	KRÜMMER	198C
					COLECTOR	COLECTOR	MANIFOLD	VERDEELSTUK	
10		86993028		1	TUBE	TUBETTO	TUBE	SCHLAUCH	195T
					TUBO	TUBO	BUISJE	RØR	
11		J948079	a	1	TUBE	TUBETTO	TUBE	SCHLAUCH	195T
					TUBO	TUBO	BUISJE	RØR	
11		87437056	b	1	TUBE	TUBETTO	TUBE	SCHLAUCH	195T
					TUBO	TUBO	BUISJE	RØR	
12		238-7018		1	O-RING 3/4 ID x 1/16	ANELLO TOROIDALE	JOINT TORIQUE	O-RING	7176
					JUNTA HERMETICA	ANEL O	O-RING	O-RING	
13	2	J926044		1	COVER	COPERCHIO	COUVERCLE	DECKEL	265C
					TAPADERA	COBERTA	DEKSEL	DÆKSEL	
14		J286499		1	HOSE 76 mm (3 in)	MANICOTTO FLESSIBILE	FLEXIBLE	SCHLAUCH	030M
					MANGA	TUBO FLEXIVEL	FLEXIBELE BUIS	SLANGE	
15		214-1512		2	CLAMP 11/16 - 1-1/4	MORSETTO	COLLIER	SCHELLE	1640
					COLLAR	BRACADEIRA	CLAMP	CLAMP	
16		J282159		1	HOSE, FLEXIBLE	TUBO FLESSIBILE	TUYAU FLEXIBLE	SCHLAUCH, FLEXIBEL	192T
					MANGA FLEXIBLE	TUBO FLEXIVEL	FLEXIBELE SLANG	FLEKSIBEL SLANGE	
17		J922789		2	CONNECTOR, HYD. Inc. 18, 19				
						RACCORDO IDRAULICO	RACCORD	STUTZEN	020R
					RACOR	CONECTOR	VERBINDING	FORSKRUNING	
18		J678603		1	O-RING 9,3 mm ID x 2,2 mr	ANELLO TOROIDALE	JOINT THORIQUE	DICHTRING	055A
					JUNTA HERMETICA	O-RING	O-RING	O-RING	
19		313262A1		1	SEAL 9,2 mm ID x 1,7 mm	ANELLO DI TENUTA	JOINT	DICHTUNG	132A
					ANILLO DE CIERRE	ANEL DE VEDACAO	DICHTINGSRING	PAKNINGSRING	
21		515-23127		1	CLAMP 1/2 ID	MORSETTO	COLLIER	SCHELLE	1640
					COLLAR	BRACADEIRA	CLAMP	CLAMP	
22		615-8012		1	BOLT M8 x 12; 8.8	BULLONE	BOULON	SCHAUBENBOLZEN	0810
					TORNILLO	PARAFUSO	BOUT	SKRUE	

(1) See Figure 02-19
(2) See Figure 02-15
(a) BSN 46325445
(b) ASN 46325445

02-18		p1	11/04

TURBOCHARGER SYSTEM, MX255 AND MX285
IMPIANTO DEL TURBOCOMPRESSORE, MX255 E MX285
CIRCUIT DU TURBOCOMPRESSEUR, MX255 ET MX285
TURBOLADERSYSTEM DER SERIEN MX255 UND MX285

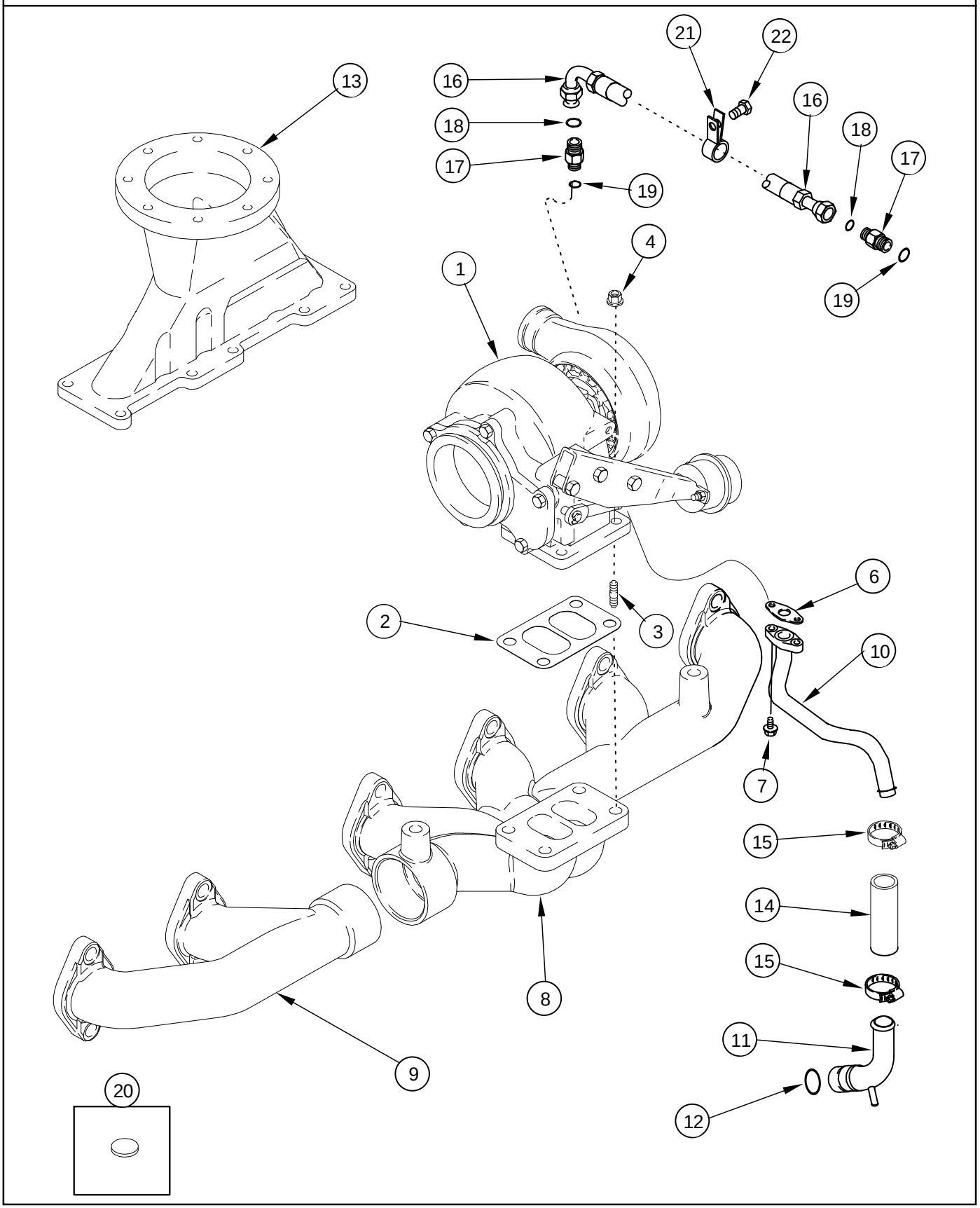

SISTEMA DEL TURBOCARGADOR, MX255 Y MX285
SISTEMA DO TURBOCOMPRESSOR, MODELOS MX255 E MX285
TURBOLADERSYSTEEM, MX255 EN MX285
TURBOLADERSYSTEM, MX255 OG MX285

R	N	P.N.	MOD	Q	Description Denominacion	Descrizione Denominação	Description Beschrijving	Bezeichnung Beskrivelse	L.C.
1	1	REF		1	INSTRUCTION Turbocharger Assy				
						ISTRUZIONI	NOTICE	HINWEIS	Z571
					MANUAL	INSTRUCAO	INSTRUCTION	SKO, INDRE	
2		J919369		1	GASKET	GUARNIZIONE	JOINT	DICHTUNG, FLACH	123G
					JUNTA HERMETICA	JUNTA	DICHTINGSSTUK	PAKNING	
3		J818823		4	STUD M10 x 40	PRIGIONIERO	GOUJON	STEHBOLZEN	210P
					PRISIONERO	PERNE	TAPEIND	STOETTEBOLT	
4		J818824		4	NUT M10	DADO	ECROU	MUTTER	010D
					TUERCA	PORCA	MOER	MØTRIK	
6		J519807		1	GASKET	GUARNIZIONE	JOINT	DICHTUNG, FLACH	3720
					JUNTA HERMETICA	JUNTA	DICHTINGSSTUK	PAKNING	
7		845-8020		2	SCREW M8 x 20; 8.8	VITE	VIS	SCHRAUBE	7450
					TORNILLO	PARAFUSO	SCHROEF	SKRUE	
8	2	J943841		1	MANIFOLD, EXHAUST	CONDOTTO DI SCARICC	CONDUIT D'ECHAPPEMI	AUSPUFFVERTEILER	230C
					COLECTOR DE ESCAPE	COLECTOR DE ESCAPE	UITLAATBUIS	UDSTOEDNINGSMANIFC	
9	2	J937477		1	MANIFOLD	COLLETTORE	COLLECTEUR	KRÜMMER	198C
					COLECTOR	COLECTOR	MANIFOLD	VERDEELSTUK	
10		J945108		1	TUBE	TUBETTO	TUBE	SCHLAUCH	195T
					TUBO	TUBO	BUISJE	RØR	
11		J948079	a	1	TUBE	TUBETTO	TUBE	SCHLAUCH	195T
					TUBO	TUBO	BUISJE	RØR	
11		87437056	b	1	TUBE	TUBETTO	TUBE	SCHLAUCH	195T
					TUBO	TUBO	BUISJE	RØR	
12		238-7018		1	O-RING 3/4 ID x 1/16	ANELLO TOROIDALE	JOINT TORIQUE	O-RING	7176
					JUNTA HERMETICA	ANEL O	O-RING	O-RING	
13	2	J943613		1	CONNECTOR, HYD.	RACCORDO IDRAULICO	RACCORD	STUTZEN	020R
					RACOR	CONECTOR	VERBINDING	FORSKRUNING	
14		J286499		1	HOSE 76 mm (3 in)	MANICOTTO FLESSIBILE	FLEXIBLE	SCHLAUCH	030M
					MANGA	TUBO FLEXIVEL	FLEXIBELE BUIS	SLANGE	
15		214-1512		2	CLAMP 11/16 - 1-1/4	MORSETTO	COLLIER	SCHELLE	1640
					COLLAR	BRACADEIRA	CLAMP	CLAMP	
16		J282159		1	HOSE, FLEXIBLE	TUBO FLESSIBILE	TUYAU FLEXIBLE	SCHLAUCH, FLEXIBEL	192T
					MANGA FLEXIBLE	TUBO FLEXIVEL	FLEXIBELE SLANG	FLEKSIBEL SLANGE	
17		J922789		2	CONNECTOR, HYD. Inc. 18, 19				
						RACCORDO IDRAULICO	RACCORD	STUTZEN	020R
					RACOR	CONECTOR	VERBINDING	FORSKRUNING	
18		J678603		1	O-RING 9,3 mm ID x 2,2 mr	ANELLO TOROIDALE	JOINT THORIQUE	DICHTRING	055A
					JUNTA HERMETICA	O-RING	O-RING	O-RING	
19		313262A1		1	SEAL 9,2 mm ID x 1,7 mm	ANELLO DI TENUTA	JOINT	DICHTUNG	132A
					ANILLO DE CIERRE	ANEL DE VEDACAO	DICHTINGSRING	PAKNINGSRING	
20		J920706		1	PLUG 22 mm OD	TAPPO	BOUCHON	STOPFEN	050T
					TAPÓN	BUJÃO	PLUG	PROP	
21		515-23127		1	CLAMP 1/2 ID	MORSETTO	COLLIER	SCHELLE	1640
					COLLAR	BRACADEIRA	CLAMP	CLAMP	

(1) See Figure 02-20
(2) See Figure 02-16
(a) BSN 46325445
(b) ASN 46325445

02-18		p2	11/04

TURBOCHARGER SYSTEM, MX255 AND MX285
IMPIANTO DEL TURBOCOMPRESSORE, MX255 E MX285
CIRCUIT DU TURBOCOMPRESSEUR, MX255 ET MX285
TURBOLADERSYSTEM DER SERIEN MX255 UND MX285

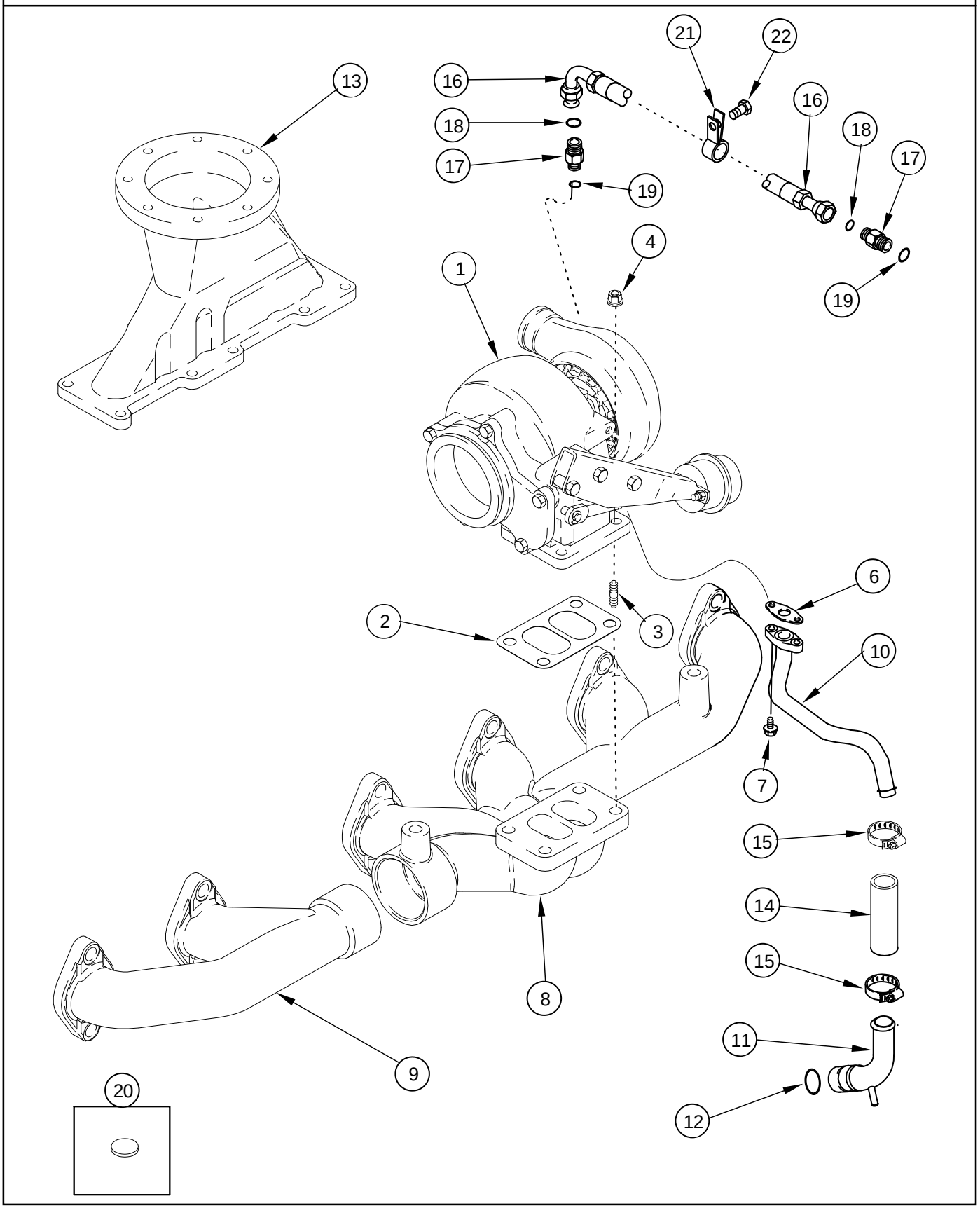

SISTEMA DEL TURBOCARGADOR, MX255 Y MX285
SISTEMA DO TURBOCOMPRESSOR, MODELOS MX255 E MX285
TURBOLADERSYSTEEM, MX255 EN MX285
TURBOLADERSYSTEM, MX255 OG MX285

R	N	P.N.	MOD	Q	Description Denominacion	Descrizione Denominação	Description Beschrijving	Bezeichnung Beskrivelse	L.C.
22		615-8012		1	BOLT M8 x 12; 8.8 TORNILLO	BULLONE PARAFUSO	BOULON BOUT	SCHAUBENBOLZEN SKRUE	0810

TURBOCHARGER ASSEMBLY, MX210 AND MX230
GRUPPO DEL TURBOCOMPRESSORE, MX210 E MX230
TURBOCOMPRESSEUR, MX210 ET MX230
TURBOLADER DER SERIEN MX210 UND MX230

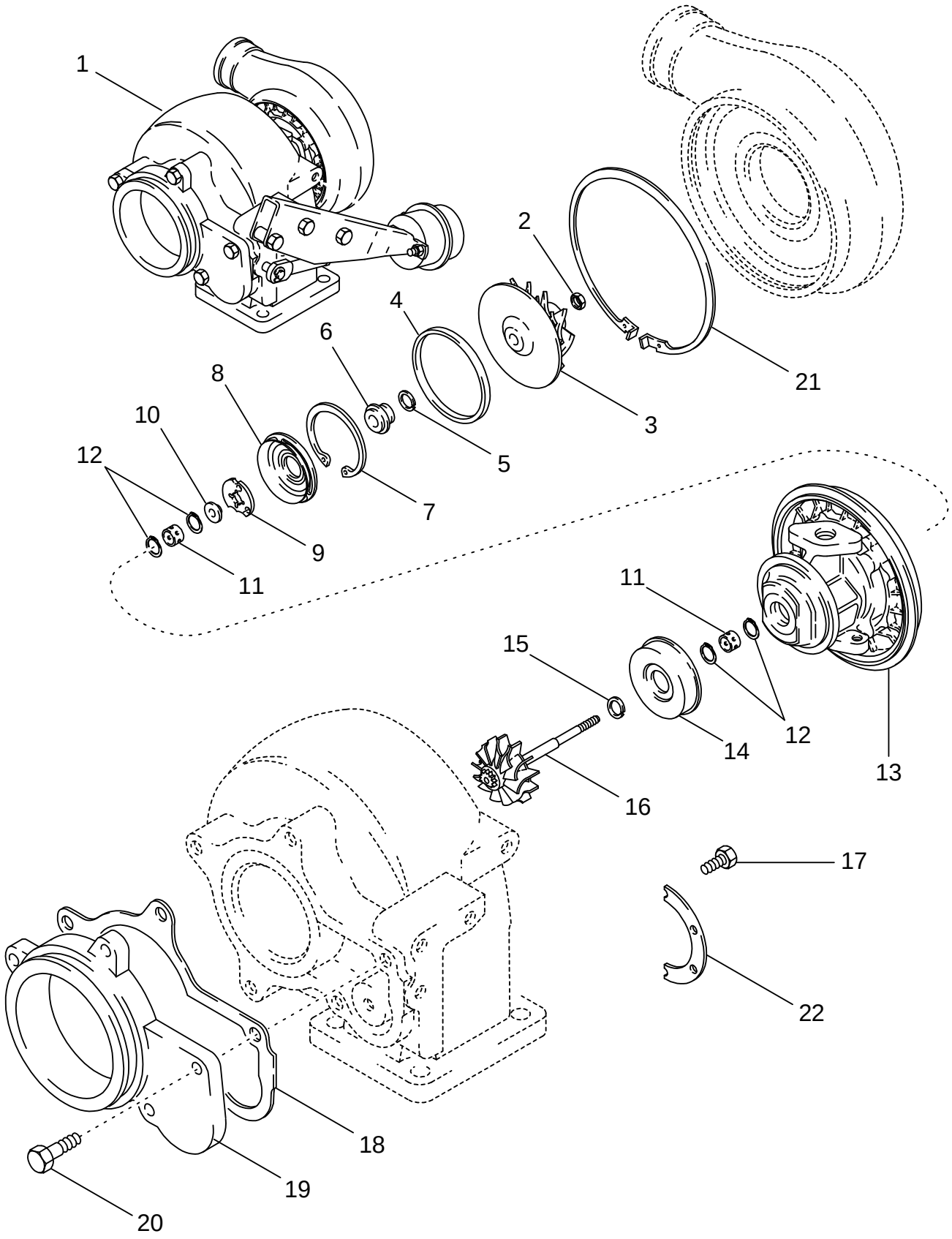

CONJUNTO DEL TURBOCARGADOR, MX210 Y MX230
CONJUNTO DO TURBOCOMPRESSOR, MODELOS MX210 E MX230
TURBOLADER, MX210 EN MX230
TURBOLADERSAMLING, MX210 OG MX230

R	N	P.N.	MOD	Q	Description Denominacion	Descrizione Denominação	Description Beschrijving	Bezeichnung Beskrivelse	L.C.
	1	**86993017**		1	TURBOCHARGER Turbocharger, Inc. J599105, J937706, J755843, Not Illustrated				
						TURBOCOMPRESSORE	TURBOCOMPRESSEUR	TURBOLADER	210T
					TURBOCOMPRESOR	TURBOCOMPRESSOR	TURBOLADER	TURBOLADER	
	2	**87405392**		1	TURBOCHARGER Turbocharger, Inc. J598070, J937706, J755843, Not Illustrated				
						TURBOCOMPRESSORE	TURBOCOMPRESSEUR	TURBOLADER	210T
					TURBOCOMPRESOR	TURBOCOMPRESSOR	TURBOLADER	TURBOLADER	
1		**NSS**		1	NOT SERVICED SEPARATELY Turbocharger, Inc. 2 - 22, Also Inc. 1 - 12, See Figure 02-21				
						NON FORNITO SEPARAT	NON FOURNI SEPAREMI	KEIN ERSATZTEIL	064N
					NO SE REPARA SEPARA	NOT SERVICED SEPARA	NIET ALLEEN VERKRIJG	NOT SERVICED SEPARA	
1		**J535324**		1	HOUSING Inc. 2 - 16	ALLOGGIAMENTO	CARTER	GEHÄUSE	014V
					CAVIDAD	ALOJAMENTO	HUIS	HUS	
2		**NSS**		1	NOT SERVICED SEPARATELY Nut				
						NON FORNITO SEPARAT	NON FOURNI SEPAREMI	KEIN ERSATZTEIL	064N
					NO SE REPARA SEPARA	NOT SERVICED SEPARA	NIET ALLEEN VERKRIJG	NOT SERVICED SEPARA	
3		**NSS**		1	NOT SERVICED SEPARATELY Impeller				
						NON FORNITO SEPARAT	NON FOURNI SEPAREMI	KEIN ERSATZTEIL	064N
					NO SE REPARA SEPARA	NOT SERVICED SEPARA	NIET ALLEEN VERKRIJG	NOT SERVICED SEPARA	
4		**NSS**		1	NOT SERVICED SEPARATELY Seal				
						NON FORNITO SEPARAT	NON FOURNI SEPAREMI	KEIN ERSATZTEIL	064N
					NO SE REPARA SEPARA	NOT SERVICED SEPARA	NIET ALLEEN VERKRIJG	NOT SERVICED SEPARA	
5		**NSS**		1	NOT SERVICED SEPARATELY Seal				
						NON FORNITO SEPARAT	NON FOURNI SEPAREMI	KEIN ERSATZTEIL	064N
					NO SE REPARA SEPARA	NOT SERVICED SEPARA	NIET ALLEEN VERKRIJG	NOT SERVICED SEPARA	
6		**NSS**		1	NOT SERVICED SEPARATELY Slinger				
						NON FORNITO SEPARAT	NON FOURNI SEPAREMI	KEIN ERSATZTEIL	064N
					NO SE REPARA SEPARA	NOT SERVICED SEPARA	NIET ALLEEN VERKRIJG	NOT SERVICED SEPARA	
7		**NSS**		1	NOT SERVICED SEPARATELY Ring				
						NON FORNITO SEPARAT	NON FOURNI SEPAREMI	KEIN ERSATZTEIL	064N
					NO SE REPARA SEPARA	NOT SERVICED SEPARA	NIET ALLEEN VERKRIJG	NOT SERVICED SEPARA	
8		**NSS**		1	NOT SERVICED SEPARATELY Baffle				
						NON FORNITO SEPARAT	NON FOURNI SEPAREMI	KEIN ERSATZTEIL	064N
					NO SE REPARA SEPARA	NOT SERVICED SEPARA	NIET ALLEEN VERKRIJG	NOT SERVICED SEPARA	
9		**NSS**		1	NOT SERVICED SEPARATELY Bearing, Thrust				
						NON FORNITO SEPARAT	NON FOURNI SEPAREMI	KEIN ERSATZTEIL	064N
					NO SE REPARA SEPARA	NOT SERVICED SEPARA	NIET ALLEEN VERKRIJG	NOT SERVICED SEPARA	
10		**NSS**		1	NOT SERVICED SEPARATELY Collar				
						NON FORNITO SEPARAT	NON FOURNI SEPAREMI	KEIN ERSATZTEIL	064N
					NO SE REPARA SEPARA	NOT SERVICED SEPARA	NIET ALLEEN VERKRIJG	NOT SERVICED SEPARA	
11		**NSS**		2	NOT SERVICED SEPARATELY Bearing, Journal				
						NON FORNITO SEPARAT	NON FOURNI SEPAREMI	KEIN ERSATZTEIL	064N
					NO SE REPARA SEPARA	NOT SERVICED SEPARA	NIET ALLEEN VERKRIJG	NOT SERVICED SEPARA	
12		**NSS**		4	NOT SERVICED SEPARATELY Ring				
						NON FORNITO SEPARAT	NON FOURNI SEPAREMI	KEIN ERSATZTEIL	064N
					NO SE REPARA SEPARA	NOT SERVICED SEPARA	NIET ALLEEN VERKRIJG	NOT SERVICED SEPARA	
13		**NSS**		1	NOT SERVICED SEPARATELY Housing				
						NON FORNITO SEPARAT	NON FOURNI SEPAREMI	KEIN ERSATZTEIL	064N
					NO SE REPARA SEPARA	NOT SERVICED SEPARA	NIET ALLEEN VERKRIJG	NOT SERVICED SEPARA	

(1) MX210
(2) MX230

TURBOCHARGER ASSEMBLY, MX210 AND MX230
GRUPPO DEL TURBOCOMPRESSORE, MX210 E MX230
TURBOCOMPRESSEUR, MX210 ET MX230
TURBOLADER DER SERIEN MX210 UND MX230

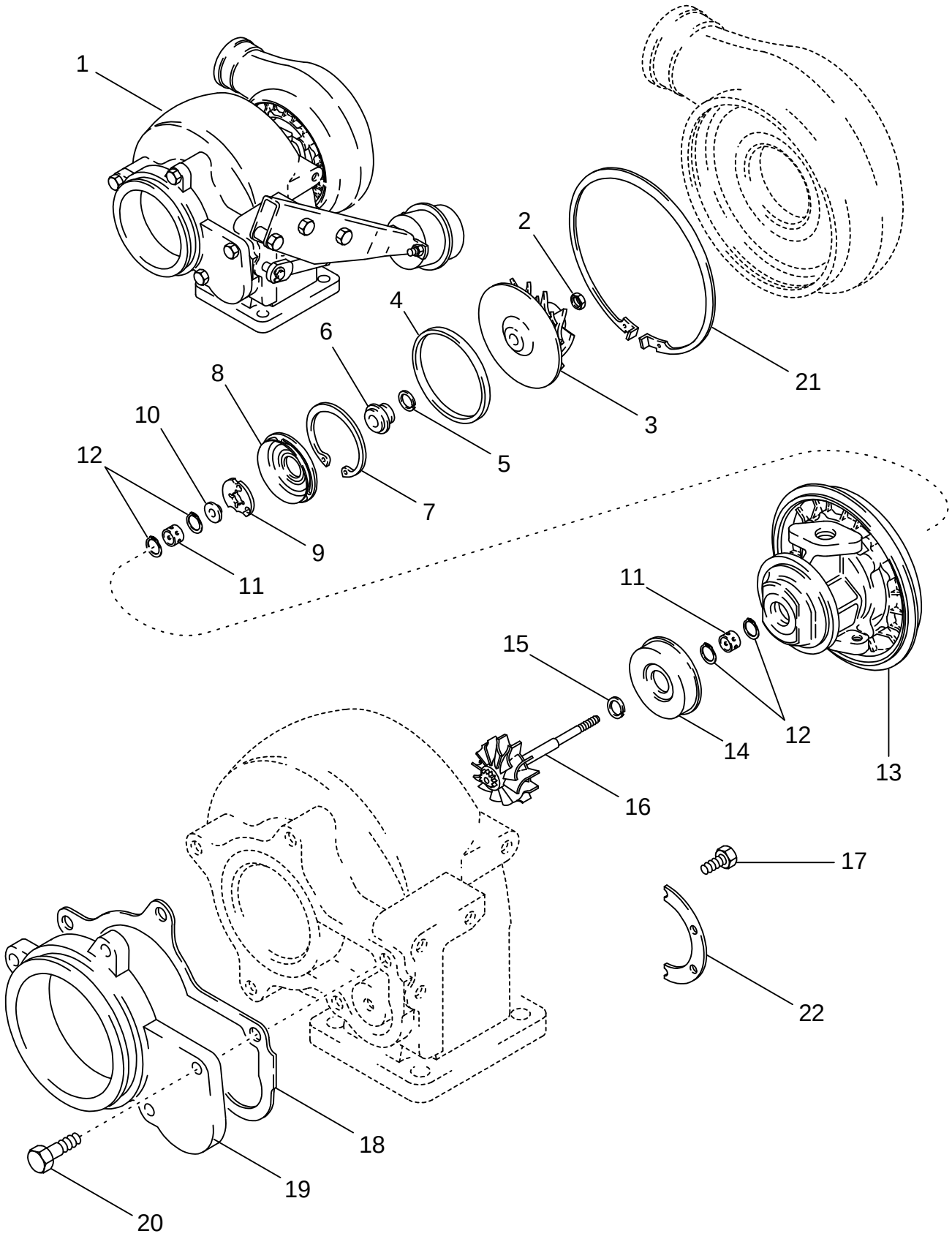

CONJUNTO DEL TURBOCARGADOR, MX210 Y MX230
CONJUNTO DO TURBOCOMPRESSOR, MODELOS MX210 E MX230
TURBOLADER, MX210 EN MX230
TURBOLADERSAMLING, MX210 OG MX230

R	N	P.N.	MOD	Q	Description Denominacion	Descrizione Denominação	Description Beschrijving	Bezeichnung Beskrivelse	L.C.
14		NSS		1	NOT SERVICED SEPARATELY Shield				
						NON FORNITO SEPARAT	NON FOURNI SEPAREMI	KEIN ERSATZTEIL	064N
					NO SE REPARA SEPARA	NOT SERVICED SEPARA	NIET ALLEEN VERKRIJG	NOT SERVICED SEPARA	
15		NSS		1	NOT SERVICED SEPARATELY Seal				
						NON FORNITO SEPARAT	NON FOURNI SEPAREMI	KEIN ERSATZTEIL	064N
					NO SE REPARA SEPARA	NOT SERVICED SEPARA	NIET ALLEEN VERKRIJG	NOT SERVICED SEPARA	
16		NSS		1	NOT SERVICED SEPARATELY Rotor And Shaft				
						NON FORNITO SEPARAT	NON FOURNI SEPAREMI	KEIN ERSATZTEIL	064N
					NO SE REPARA SEPARA	NOT SERVICED SEPARA	NIET ALLEEN VERKRIJG	NOT SERVICED SEPARA	
17		J759917		6	SCREW	VITE	VIS	SCHRAUBE	040V
					TORNILLO	PARAFUSO	SCHROEF	SKRUE	
18		J535243		1	GASKET	GUARNIZIONE	JOINT	DICHTUNG, FLACH	123G
					JUNTA HERMETICA	JUNTA	DICHTINGSSTUK	PAKNING	
19		J528010		1	ADAPTER	ADATTATORE	ADAPTEUR	ADAPTER	001A
					ADAPTOR	ADAPTOR	VERLOOPSTUK	ADAPTER	
20		J503533		5	BOLT M8 x 20; 8,8	BULLONE	BOULON	SCHAUBENBOLZEN	140B
					TORNILLO	PARAFUSO	BOUT	SKRUE	
21		J533163		1	RING, SNAP	ANELLO ELASTICO	ANNEAU D'ARRÊT	SICHERUNGSRING	054A
					ANILLO DE RESORTE	ANEL	RING, SNAP	LÅSERING	
22		J597308		2	PLATE	PIASTRA	PLAQUE	PLATTE	105P
					PLACA	CHAPA	PLAAT	PLADE	
		J575169		1	KIT, REPAIR Overhaul, Inc. 2, 4, 5, 7, 8, 9, 11, 12, 15, 17				
						KIT RIPARAZIONE	COLIS DE RÉPARATION	REPARATURSATZ	003K
					JUEGO DE REPARACION	KIT REPARACAO	HERSTELKIT	REPARATIONSSAET	

TURBOCHARGER ASSEMBLY, MX255 AND MX285
GRUPPO DEL TURBOCOMPRESSORE, MX255 E MX285
TURBOCOMPRESSEUR, MX255 ET MX285
TURBOLADER DER SERIEN MX255 UND MX285

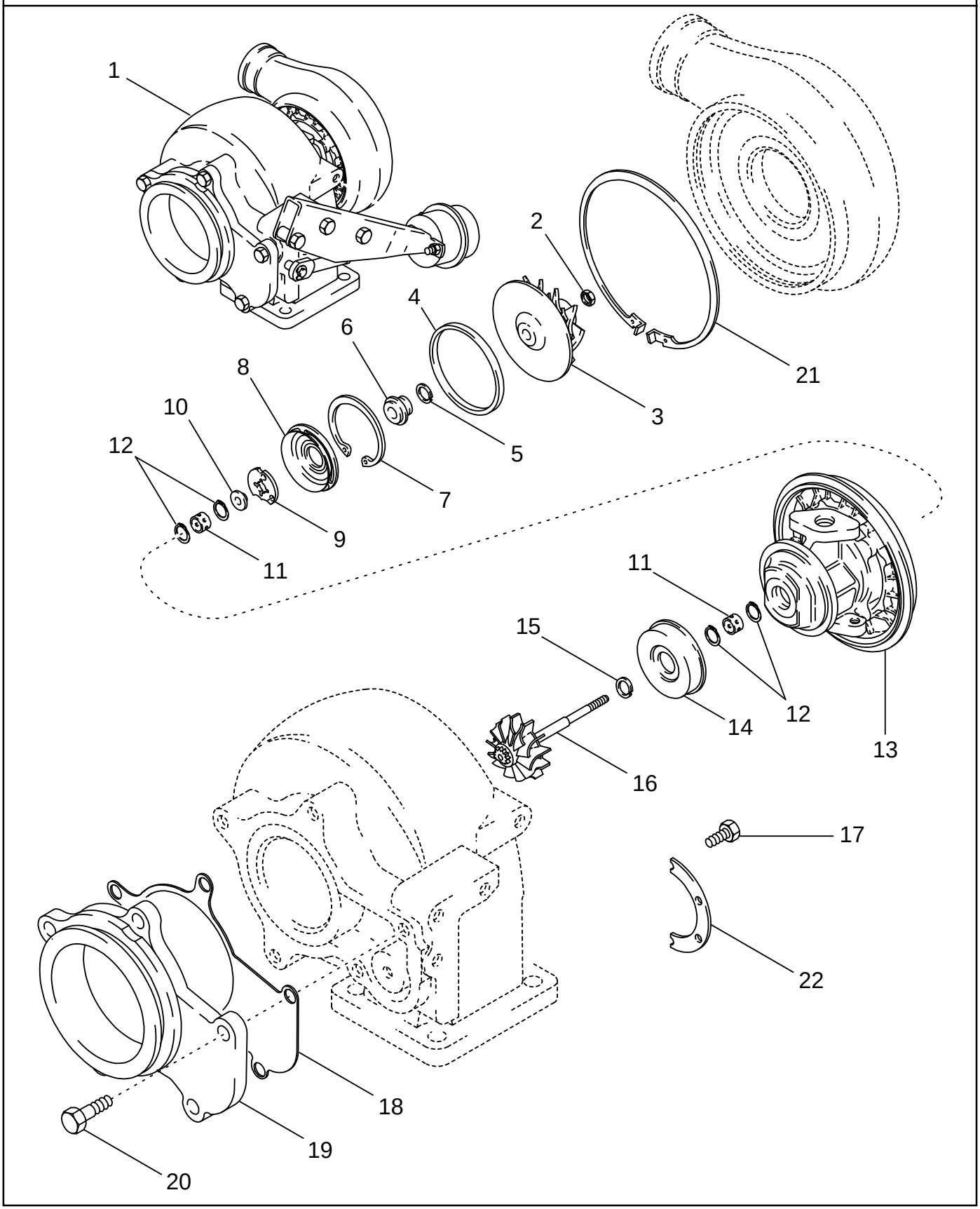

CONJUNTO DEL TURBOCARGADOR, MX255 Y MX285
CONJUNTO DO TURBOCOMPRESSOR, MODELOS MX255 E MX285
TURBOLADER, MX255 EN MX285
TURBOLADERSAMLING, MX255 OG MX285

R	N	P.N.	MOD	Q	Description Denominacion	Descrizione Denominação	Description Beschrijving	Bezeichnung Beskrivelse	L.C.
		J800426		1	KIT, SERVICE Turbocharger, Inc. J590348, J519807, J709861, 237-6005, Not Illustrated				
						KIT ASSISTENZIALE	KIT ASSISTANCE	WARTUNGSSATZ	021K
					KIT, SERVICE	KIT, SERVICE	KIT, SERVICE	SERVICE SAET	
		NSS		1	NOT SERVICED SEPARATELY Turbocharger, Inc. 1 - 22, Also Inc. 1 - 15, See Figure 02-22				
						NON FORNITO SEPARAT	NON FOURNI SEPAREMI	KEIN ERSATZTEIL	064N
					NO SE REPARA SEPARA	NOT SERVICED SEPARA	NIET ALLEEN VERKRIJG	NOT SERVICED SEPARA	
1		**J591196**		1	HOUSING Center, Inc. 2 - 16				
						ALLOGGIAMENTO	CARTER	GEHÄUSE	014V
					CAVIDAD	ALOJAMENTO	HUIS	HUS	
2		**NSS**		1	NOT SERVICED SEPARATELY Nut				
						NON FORNITO SEPARAT	NON FOURNI SEPAREMI	KEIN ERSATZTEIL	064N
					NO SE REPARA SEPARA	NOT SERVICED SEPARA	NIET ALLEEN VERKRIJG	NOT SERVICED SEPARA	
3		**NSS**		1	NOT SERVICED SEPARATELY Impeller				
						NON FORNITO SEPARAT	NON FOURNI SEPAREMI	KEIN ERSATZTEIL	064N
					NO SE REPARA SEPARA	NOT SERVICED SEPARA	NIET ALLEEN VERKRIJG	NOT SERVICED SEPARA	
4		**NSS**		1	NOT SERVICED SEPARATELY Seal				
						NON FORNITO SEPARAT	NON FOURNI SEPAREMI	KEIN ERSATZTEIL	064N
					NO SE REPARA SEPARA	NOT SERVICED SEPARA	NIET ALLEEN VERKRIJG	NOT SERVICED SEPARA	
5		**NSS**		1	NOT SERVICED SEPARATELY Seal				
						NON FORNITO SEPARAT	NON FOURNI SEPAREMI	KEIN ERSATZTEIL	064N
					NO SE REPARA SEPARA	NOT SERVICED SEPARA	NIET ALLEEN VERKRIJG	NOT SERVICED SEPARA	
6		**NSS**		1	NOT SERVICED SEPARATELY Slinger				
						NON FORNITO SEPARAT	NON FOURNI SEPAREMI	KEIN ERSATZTEIL	064N
					NO SE REPARA SEPARA	NOT SERVICED SEPARA	NIET ALLEEN VERKRIJG	NOT SERVICED SEPARA	
7		**NSS**		1	NOT SERVICED SEPARATELY Ring				
						NON FORNITO SEPARAT	NON FOURNI SEPAREMI	KEIN ERSATZTEIL	064N
					NO SE REPARA SEPARA	NOT SERVICED SEPARA	NIET ALLEEN VERKRIJG	NOT SERVICED SEPARA	
8		**NSS**		1	NOT SERVICED SEPARATELY Baffle				
						NON FORNITO SEPARAT	NON FOURNI SEPAREMI	KEIN ERSATZTEIL	064N
					NO SE REPARA SEPARA	NOT SERVICED SEPARA	NIET ALLEEN VERKRIJG	NOT SERVICED SEPARA	
9		**NSS**		1	NOT SERVICED SEPARATELY Bearing, Thrust				
						NON FORNITO SEPARAT	NON FOURNI SEPAREMI	KEIN ERSATZTEIL	064N
					NO SE REPARA SEPARA	NOT SERVICED SEPARA	NIET ALLEEN VERKRIJG	NOT SERVICED SEPARA	
10		**NSS**		1	NOT SERVICED SEPARATELY Collar				
						NON FORNITO SEPARAT	NON FOURNI SEPAREMI	KEIN ERSATZTEIL	064N
					NO SE REPARA SEPARA	NOT SERVICED SEPARA	NIET ALLEEN VERKRIJG	NOT SERVICED SEPARA	
11		**NSS**		2	NOT SERVICED SEPARATELY Bearing, Journal				
						NON FORNITO SEPARAT	NON FOURNI SEPAREMI	KEIN ERSATZTEIL	064N
					NO SE REPARA SEPARA	NOT SERVICED SEPARA	NIET ALLEEN VERKRIJG	NOT SERVICED SEPARA	
12		**NSS**		4	NOT SERVICED SEPARATELY Ring				
						NON FORNITO SEPARAT	NON FOURNI SEPAREMI	KEIN ERSATZTEIL	064N
					NO SE REPARA SEPARA	NOT SERVICED SEPARA	NIET ALLEEN VERKRIJG	NOT SERVICED SEPARA	
13		**NSS**		1	NOT SERVICED SEPARATELY Housing				
						NON FORNITO SEPARAT	NON FOURNI SEPAREMI	KEIN ERSATZTEIL	064N
					NO SE REPARA SEPARA	NOT SERVICED SEPARA	NIET ALLEEN VERKRIJG	NOT SERVICED SEPARA	
14		**NSS**		1	NOT SERVICED SEPARATELY Shield				
						NON FORNITO SEPARAT	NON FOURNI SEPAREMI	KEIN ERSATZTEIL	064N
					NO SE REPARA SEPARA	NOT SERVICED SEPARA	NIET ALLEEN VERKRIJG	NOT SERVICED SEPARA	

TURBOCHARGER ASSEMBLY, MX255 AND MX285
GRUPPO DEL TURBOCOMPRESSORE, MX255 E MX285
TURBOCOMPRESSEUR, MX255 ET MX285
TURBOLADER DER SERIEN MX255 UND MX285

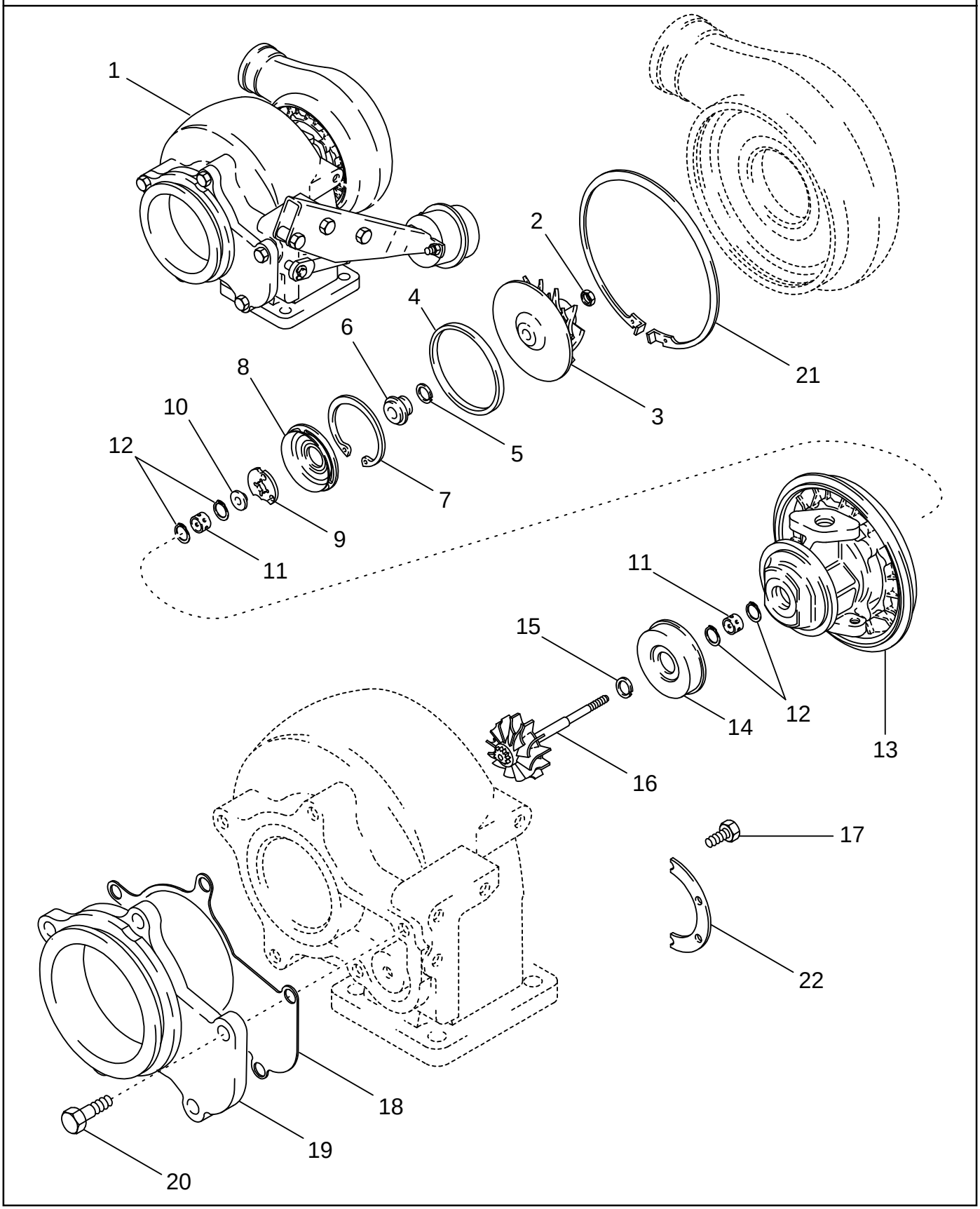

CONJUNTO DEL TURBOCARGADOR, MX255 Y MX285
CONJUNTO DO TURBOCOMPRESSOR, MODELOS MX255 E MX285
TURBOLADER, MX255 EN MX285
TURBOLADERSAMLING, MX255 OG MX285

R	N	P.N.	MOD	Q	Description Denominacion	Descrizione Denominação	Description Beschrijving	Bezeichnung Beskrivelse	L.C.
15		NSS		1	NOT SERVICED SEPARATELY Seal				
						NON FORNITO SEPARAT	NON FOURNI SEPAREMI	KEIN ERSATZTEIL	064N
					NO SE REPARA SEPARA	NOT SERVICED SEPARA	NIET ALLEEN VERKRIJG	NOT SERVICED SEPARA	
16		NSS		1	NOT SERVICED SEPARATELY Rotor And Shaft				
						NON FORNITO SEPARAT	NON FOURNI SEPAREMI	KEIN ERSATZTEIL	064N
					NO SE REPARA SEPARA	NOT SERVICED SEPARA	NIET ALLEEN VERKRIJG	NOT SERVICED SEPARA	
17		J759917		6	SCREW	VITE	VIS	SCHRAUBE	040V
					TORNILLO	PARAFUSO	SCHROEF	SKRUE	
18		J537960		1	GASKET	GUARNIZIONE	JOINT	DICHTUNG, FLACH	123G
					JUNTA HERMETICA	JUNTA	DICHTINGSSTUK	PAKNING	
19		J537979		1	ADAPTER	ADATTATORE	ADAPTEUR	ADAPTER	001A
					ADAPTOR	ADAPTOR	VERLOOPSTUK	ADAPTER	
20		614-8020		5	SCREW M8 x 20; 8,8	VITE	VIS	SCHRAUBE	P136
					TORNILLO	PARAFUSO	SCHROEF	SKRUE	
21		J533163		1	RING, SNAP	ANELLO ELASTICO	ANNEAU D'ARRÊT	SICHERUNGSRING	054A
					ANILLO DE RESORTE	ANEL	RING, SNAP	LÅSERING	
22		J534309		2	PLATE	PIASTRA	PLAQUE	PLATTE	105P
					PLACA	CHAPA	PLAAT	PLADE	
		J575169		1	KIT, REPAIR Overhaul, Inc. 2, 4, 5, 7, 8, 9, 11, 12, 15, 17				
						KIT RIPARAZIONE	COLIS DE RÉPARATION	REPARATURSATZ	003K
					JUEGO DE REPARACION	KIT REPARACAO	HERSTELKIT	REPARATIONSSAET	

WASTEGATE ACTUATOR, MX210 AND MX230
AZIONATORE DELLA VALVOLA WESTGATE, MX210 E MX230
SOUPAPE DE DÉCHARGE - ACTIONNEUR, MX210 ET MX230
STELLVORRICHTUNG LADEDRUCK-REGELVENTIL DER SERIEN MX210 UND MX230

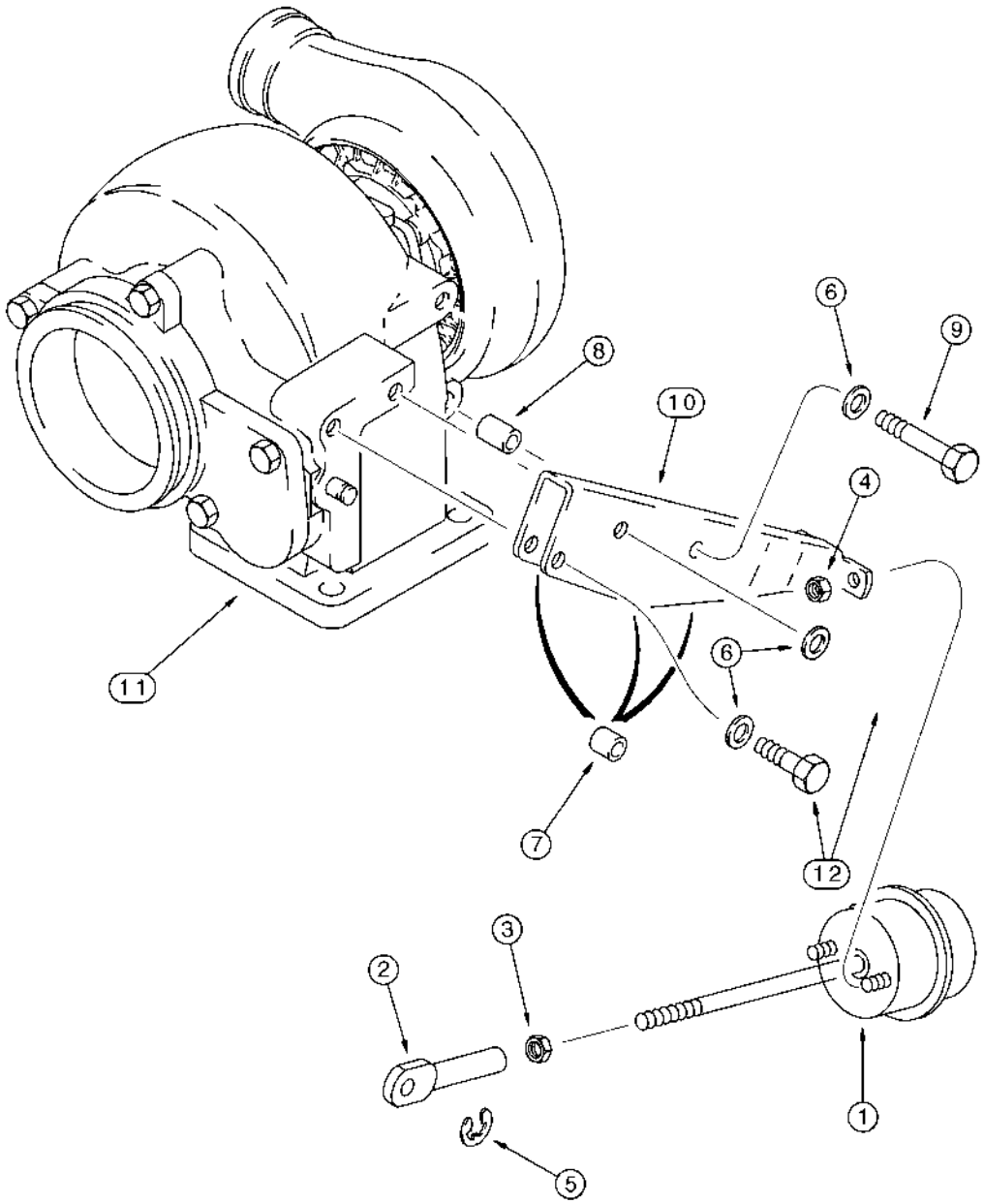

ACCIONADOR DE DESCARGA , MX210 Y MX230
ACCIONADOR DA VÁLVULA DE ESCAPE, MODELOS MX210 E MX230
WASTEGATE-ACTUATOR, MX210 EN MX230
WASTEGATE-AKTUATOR, MX210 OG MX230

R	N	P.N.	MOD	Q	Description Denominacion	Descrizione Denominação	Description Beschrijving	Bezeichnung Beskrivelse	L.C.
		REF		1	INSTRUCTION Turbocharger Assy, Inc. 1 - 12, Also Inc. 2 - 22, See Figure 02-19				
						ISTRUZIONI	NOTICE	HINWEIS	Z571
					MANUAL	INSTRUCAO	INSTRUCTION	SKO, INDRE	
1		**J593678**		1	ACTUATOR	ATTUATORE	MECANISME DE CDE	STEUERMECHANISMUS	950A
					MECANISMO DE MANDC	MECANISMO DE MANDC	ACTUATOR	AKUATOR	
2		**J528177**		1	LINK	MAGLIA	MAILLON	GELENKSTANGE	5290
					ESLABON	ELO	LINK	FORBINDELSESSTANG	
3		**425-155**		1	NUT 5/16 NF	DADO	ECROU	MUTTER	5780
					TUERCA	PORCA	MOER	MØTRIK	
4		**J592050**		2	NUT, LOCK	CONTRODADO	CONTRE-ECROU	KONTERMUTTER	P263
					CONTRA TUERCA	CONTRA PORCA	NUT, LOCK	NUT, LOCK	
5		**J528221**		1	RING, SNAP	ANELLO ELASTICO	ANNEAU D'ARRÊT	SICHERUNGSRING	054A
					ANILLO DE RESORTE	ANEL	RING, SNAP	LÅSERING	
		NSS		1	NOT SERVICED SEPARATELY Housing, Inc. 6 - 12				
						NON FORNITO SEPARAT	NON FOURNI SEPAREMI	KEIN ERSATZTEIL	064N
					NO SE REPARA SEPARA	NOT SERVICED SEPARA	NIET ALLEEN VERKRIJG	NOT SERVICED SEPARA	
6		**895-11008**		3	WASHER 9 x 17 x 1,6 mm	ROSETTA PIANA	RONDELLE	BEILAGSCHEIBE	131R
					ARANDELA	ANILHA	SLUITRING	FLADSKIVE	
7		**J532195**		3	SPACER 13,6 mm	DISTANZIALE	ENTRETOISE	DISTANZSTÜCK	075D
					SEPARADOR	ESPACADOR	AFSTANDSRING	AFSTANDSSTYKKE	
8		**J532196**		1	SPACER 19 mm	DISTANZIALE	ENTRETOISE	DISTANZSTÜCK	075D
					SEPARADOR	ESPACADOR	AFSTANDSRING	AFSTANDSSTYKKE	
9		**814-8050**		1	SCREW M8 x 50; 8.8	VITE	VIS	SCHRAUBE	P136
					TORNILLO	PARAFUSO	SCHROEF	SKRUE	
10		**J532671**		1	BRACKET	STAFFA	PATTE FIXATION	HALTERUNG	225S
					PIEZA DE SOPORTE	BRACADEIRA	STEUNBEUGEL	BESLAG	
11		**NSS**		1	NOT SERVICED SEPARATELY Housing				
						NON FORNITO SEPARAT	NON FOURNI SEPAREMI	KEIN ERSATZTEIL	064N
					NO SE REPARA SEPARA	NOT SERVICED SEPARA	NIET ALLEEN VERKRIJG	NOT SERVICED SEPARA	
12		**814-8035**		2	SCREW M8 x 35; 8,8	VITE	VIS	SCHRAUBE	P136
					TORNILLO	PARAFUSO	SCHROEF	SKRUE	

02-22		p1	12/04

WASTEGATE ACTUATOR, MX255 AND MX285
AZIONATORE DELLA VALVOLA WESTGATE, MX255 E MX285
SOUPAPE DE DÉCHARGE - ACTIONNEUR, MX255 ET MX285
STELLVORRICHTUNG LADEDRUCK-REGELVENTIL DER SERIEN MX255 UND MX285

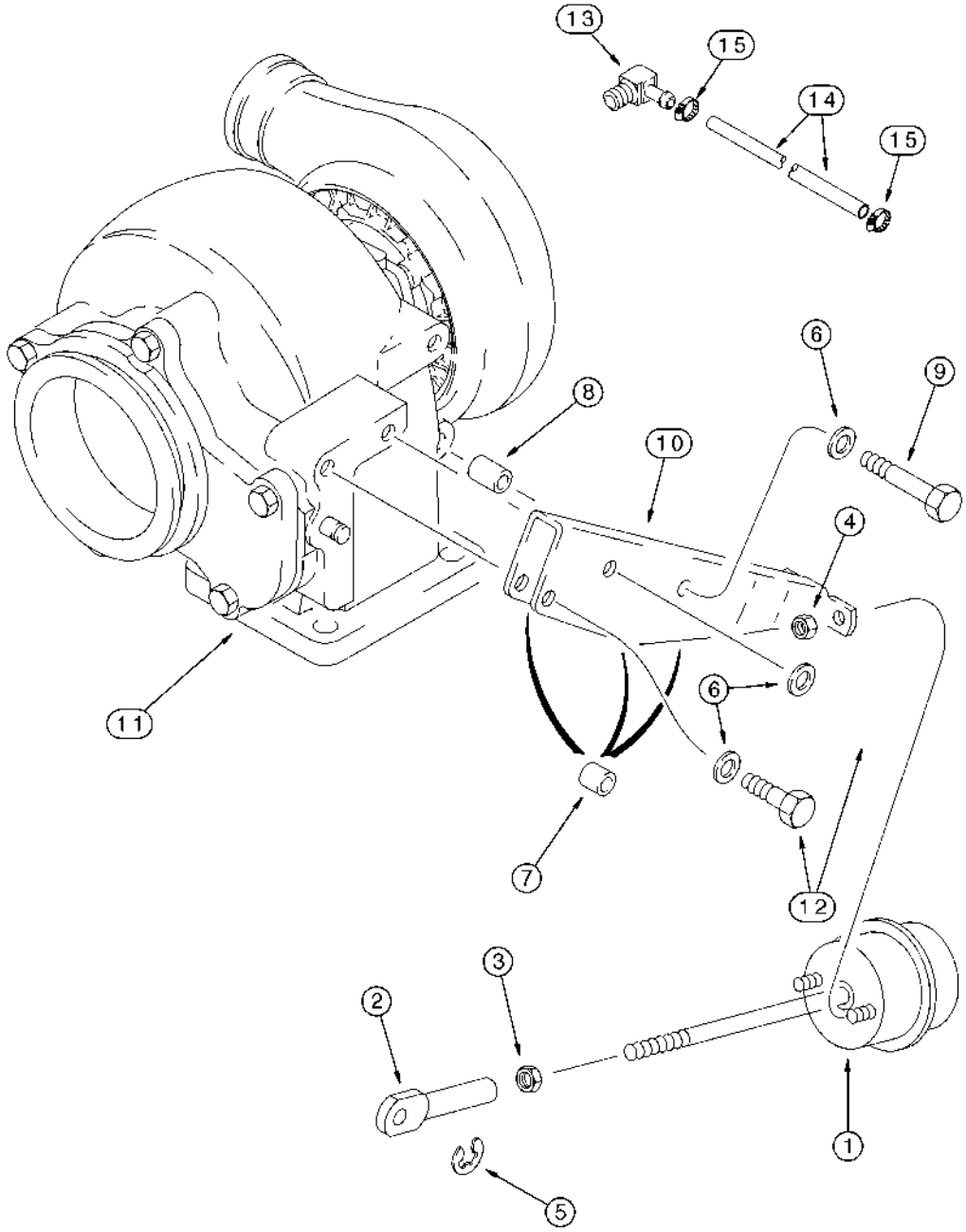

ACCIONADOR DE DESCARGA , MX255 Y MX285
ACCIONADOR DA VÁLVULA DE ESCAPE, MODELOS MX255 E MX285
WASTEGATE-ACTUATOR, MX255 EN MX285
WASTEGATE-AKTUATOR, MX255 OG MX285

R	N	P.N.	MOD	Q	Description Denominacion	Descrizione Denominação	Description Beschrijving	Bezeichnung Beskrivelse	L.C.
		REF		1	INSTRUCTION Turbocharger Assy, Inc. 1 - 15, Also Inc. 2 - 22, See Figue 02-20				
						ISTRUZIONI	NOTICE	HINWEIS	Z571
					MANUAL	INSTRUCAO	INSTRUCTION	SKO, INDRE	
1		**J594348**		1	ACTUATOR	ATTUATORE	MECANISME DE CDE	STEUERMECHANISMUS	950A
					MECANISMO DE MANDC	MECANISMO DE MANDC	ACTUATOR	AKUATOR	
2		**J528177**		1	LINK	MAGLIA	MAILLON	GELENKSTANGE	5290
					ESLABON	ELO	LINK	FORBINDELSESSTANG	
3		**425-155**		1	NUT 5/16 NF	DADO	ECROU	MUTTER	5780
					TUERCA	PORCA	MOER	MØTRIK	
4		**J592050**		2	NUT, LOCK	CONTRODADO	CONTRE-ECROU	KONTERMUTTER	P263
					CONTRA TUERCA	CONTRA PORCA	NUT, LOCK	NUT, LOCK	
5		**J528221**		1	RING, SNAP	ANELLO ELASTICO	ANNEAU D'ARRÊT	SICHERUNGSRING	054A
					ANILLO DE RESORTE	ANEL	RING, SNAP	LÅSERING	
		NSS		1	NOT SERVICED SEPARATELY Housing, Inc. 6 - 12				
						NON FORNITO SEPARAT	NON FOURNI SEPAREMI	KEIN ERSATZTEIL	064N
					NO SE REPARA SEPARA	NOT SERVICED SEPARA	NIET ALLEEN VERKRIJG	NOT SERVICED SEPARA	
6		**895-11008**		3	WASHER 9 x 17 x 1,6 mm	ROSETTA PIANA	RONDELLE	BEILAGSCHEIBE	131R
					ARANDELA	ANILHA	SLUITRING	FLADSKIVE	
7		**J532195**		3	SPACER 13,6 mm	DISTANZIALE	ENTRETOISE	DISTANZSTÜCK	075D
					SEPARADOR	ESPACADOR	AFSTANDSRING	AFSTANDSSTYKKE	
8		**J532196**		1	SPACER 19 mm	DISTANZIALE	ENTRETOISE	DISTANZSTÜCK	075D
					SEPARADOR	ESPACADOR	AFSTANDSRING	AFSTANDSSTYKKE	
9		**814-8050**		1	SCREW M8 x 50; 8,8	VITE	VIS	SCHRAUBE	P136
					TORNILLO	PARAFUSO	SCHROEF	SKRUE	
10		**J532671**		1	BRACKET	STAFFA	PATTE FIXATION	HALTERUNG	225S
					PIEZA DE SOPORTE	BRACADEIRA	STEUNBEUGEL	BESLAG	
11		**NSS**		1	NOT SERVICED SEPARATELY Housing				
						NON FORNITO SEPARAT	NON FOURNI SEPAREMI	KEIN ERSATZTEIL	064N
					NO SE REPARA SEPARA	NOT SERVICED SEPARA	NIET ALLEEN VERKRIJG	NOT SERVICED SEPARA	
12		**814-8035**		2	SCREW M8 x 35; 8,8	VITE	VIS	SCHRAUBE	P136
					TORNILLO	PARAFUSO	SCHROEF	SKRUE	
13		**J528121**		1	ELBOW	GOMITO	COUDE	KNIESTÜCK	085G
					CODO	JOELHO	ELLEBOOG	VINKELROER	
14		**A78037**		1	HOSE	MANICOTTO FLESSIBILE	FLEXIBLE	SCHLAUCH	030M
					MANGA	TUBO FLEXIVEL	FLEXIBELE BUIS	SLANGE	
15		**214-1404**		2	CLAMP 1/4 - 5/8	MORSETTO	COLLIER	SCHELLE	1640
					COLLAR	BRACADEIRA	CLAMP	CLAMP	

FILTER AND COOLER - OIL, MX210 AND MX230
FILTRO E SCAMBIATORE DI CALORE - OLIO, MX210 E MX230
FILTRE ET REFROIDISSEUR D'HUILE, MX210 ET MX230
ÖLFILTER UND ÖLKÜHLER DER SERIEN MX210 UND MX230

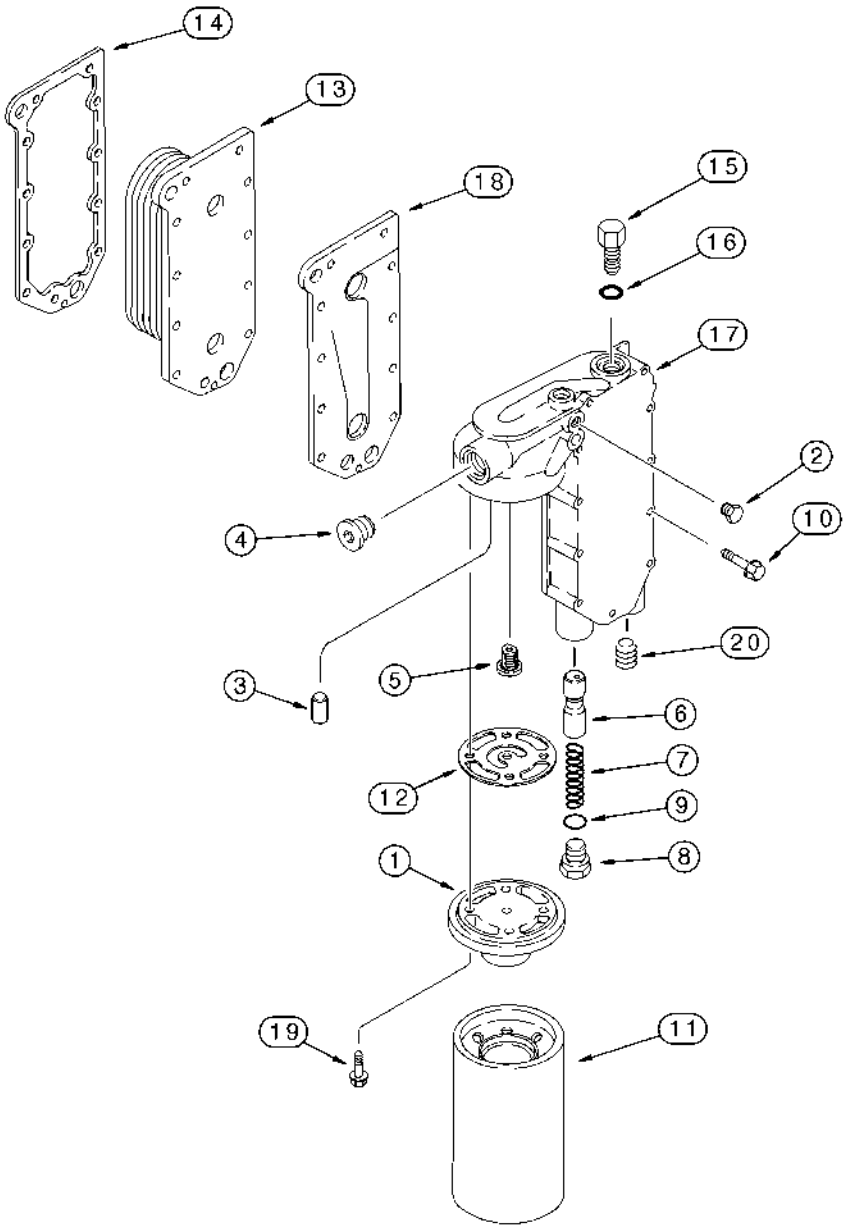

FILTRO Y REFRIGERADOR- ACEITE, MX210 Y MX230
FILTRO E ARREFECEDOR DO ÓLEO, MODELOS MX210 E MX230
FILTER EN KOELER - OLIE, MX210 EN MX230
FILTER OG KØLEANORDNING - OLIE, MX210 OG MX230

R	N	P.N.	MOD	Q	Description Denominacion	Descrizione Denominação	Description Beschrijving	Bezeichnung Beskrivelse	L.C.
1		J918334		1	HEAD Filter CULATA	TESTA CABECA	TÊTE HEAD	KOPF HOVED	4180
2		J906619		2	PLUG 1/8 PT TAPÓN	TAPPO BUJÃO	BOUCHON PLUG	STOPFEN PROP	050T
3		A77722		1	PIN PERNO	PERNO PERNO	AXE PEN	BOLZEN STIFT	080P
4		217-441		1	PLUG 3/4 PT TAPÓN	TAPPO BUJAO	BOUCHON PLUG	STOPFEN PROP	6400
5		J936365		1	VALVE, PRESSURE RELIEF VÁLVULA, DESCARGA	VALVOLA, DI SICUREZZA VÁLVULA, DESCARGA	SOUPAPE, DÉCHARGE OVERDRUKVENTIEL	ÜBERDRUCKVENTIL SIKKERHEDSVENTIL	007V
6		J945967		1	PLUNGER EMBOLO	STANTUFFO EMBOLO	PLONGEUR ZUIGER	KOLBENSTEMPEL STEMPEL	130P
7		A77541		1	SPRING RESORTE	MOLLA MOLA	RESSORT VEER	FEDER FJEDER	100M
8		J931084		1	PLUG 24 mm, Inc. 9 TAPÓN	TAPPO BUJÃO	BOUCHON PLUG	STOPFEN PROP	050T
9		J930911		1	O-RING 3/4 ID x 1/16 JUNTA HERMETICA	ANELLO TOROIDALE O-RING	JOINT THORIQUE O-RING	DICHTRING O-RING	055A
10		845-8065		11	SCREW M8 x 65 TORNILLO	VITE PARAFUSO	VIS SCHROEF	SCHRAUBE SKRUE	7450
11		J919562		1	FILTER, ENGINE OIL FILTRO DE ACEITE	FILTRO OLIO MOTORE FILTRO DE OLEO	FILTRE A HUILE MOTEU OLIEFILTER	MOTORÖLFILTER OLIEFILTER	067F
12		J921605		1	GASKET JUNTA HERMETICA	GUARNIZIONE JUNTA	JOINT DICHTINGSSTUK	DICHTUNG, FLACH PAKNING	123G
13		J918175		1	CORE-OIL COOLER REFRI/ACEI A RENOVAR	RADIATORE OLIO DA RE CORE-OIL COOLER	RADIA/HUILE ARENOVEI CORE-OIL COOLER	ÖLKÜHLER, ZU ERNEUE CORE-OIL COOLER	T074
14		J918174		1	GASKET JUNTA HERMETICA	GUARNIZIONE JUNTA	JOINT DICHTINGSSTUK	DICHTUNG, FLACH PAKNING	123G
		J934410		1	VALVE Inc. 15, 16 VALVULA	VALVOLA VALVULA	VALVE VALVE	VENTIL VALVE	P468
15		NSS		1	NOT SERVICED SEPARATELY Thermostat NO SE REPARA SEPARA	NON FORNITO SEPARAT NOT SERVICED SEPARA	NON FOURNI SEPAREMI NIET ALLEEN VERKRIJG	KEIN ERSATZTEIL NOT SERVICED SEPARA	064N
16		A77724		1	O-RING JUNTA HERMETICA	ANELLO TOROIDALE O-RING	JOINT THORIQUE O-RING	DICHTRING O-RING	055A
17		J934159		1	COVER TAPADERA	COPERCHIO COBERTA	COUVERCLE DEKSEL	DECKEL DÆKSEL	265C
18		J4063496		1	GASKET JUNTA HERMETICA	GUARNIZIONE JUNTA	JOINT DICHTINGSSTUK	DICHTUNG, FLACH PAKNING	123G
19		J907860		4	BOLT M8 x 25 TORNILLO	BULLONE PARAFUSO	BOULON BOUT	SCHAUBENBOLZEN SKRUE	140B
20		221-1034		1	PLUG 1/2 PT TAPÓN	TAPPO BUJAO	BOUCHON PLUG	STOPFEN PROP	6400

FILTER AND COOLER - OIL, MX255 AND MX285
FILTRO E SCAMBIATORE DI CALORE - OLIO, MX255 E MX285
FILTRE ET REFROIDISSEUR D'HUILE, MX255 ET MX285
ÖLFILTER UND ÖLKÜHLER DER SERIEN MX255 UND MX285

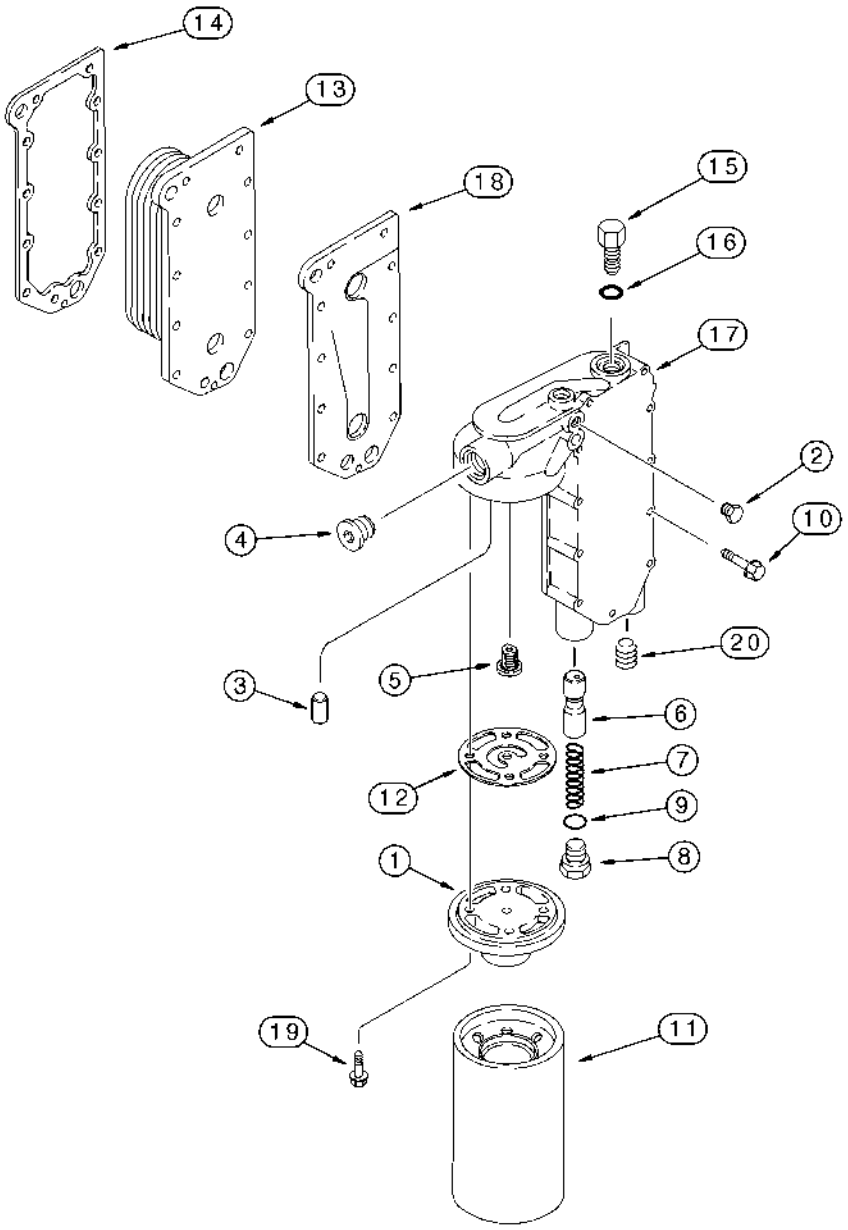

FILTRO Y REFRIGERADOR- ACEITE, MX255 Y MX285
FILTRO E ARREFECEDOR DO ÓLEO, MODELOS MX255 E MX285
FILTER EN KOELER - OLIE, MX255 EN MX285
FILTER OG KØLEANORDNING - OLIE, MX255 OG MX285

R	N	P.N.	MOD	Q	Description Denominacion	Descrizione Denominação	Description Beschrijving	Bezeichnung Beskrivelse	L.C.
1		J918334		1	HEAD Filter CULATA	TESTA CABECA	TÊTE HEAD	KOPF HOVED	4180
2		J906619		2	PLUG 1/8 PT TAPÓN	TAPPO BUJÃO	BOUCHON PLUG	STOPFEN PROP	050T
3		A77722		1	PIN PERNO	PERNO PERNO	AXE PEN	BOLZEN STIFT	080P
4		217-441		1	PLUG 3/4 PT TAPÓN	TAPPO BUJAO	BOUCHON PLUG	STOPFEN PROP	6400
5		J936365		1	VALVE, PRESSURE RELIEF VÁLVULA, DESCARGA	VALVOLA, DI SICUREZZA VÁLVULA, DESCARGA	SOUPAPE, DÉCHARGE OVERDRUKVENTIEL	ÜBERDRUCKVENTIL SIKKERHEDSVENTIL	007V
6		J945967		1	PLUNGER EMBOLO	STANTUFFO EMBOLO	PLONGEUR ZUIGER	KOLBENSTEMPEL STEMPEL	130P
7		A77541		1	SPRING RESORTE	MOLLA MOLA	RESSORT VEER	FEDER FJEDER	100M
8		J931084		1	PLUG 24 mm, Inc. 9 TAPÓN	TAPPO BUJÃO	BOUCHON PLUG	STOPFEN PROP	050T
9		J930911		1	O-RING 3/4 ID x 1/16 JUNTA HERMETICA	ANELLO TOROIDALE O-RING	JOINT THORIQUE O-RING	DICHTRING O-RING	055A
10		845-8065		11	SCREW M8 x 65 TORNILLO	VITE PARAFUSO	VIS SCHROEF	SCHRAUBE SKRUE	7450
11		J919562		1	FILTER, ENGINE OIL FILTRO DE ACEITE	FILTRO OLIO MOTORE FILTRO DE OLEO	FILTRE A HUILE MOTEU OLIEFILTER	MOTORÖLFILTER OLIEFILTER	067F
12		J921605		1	GASKET JUNTA HERMETICA	GUARNIZIONE JUNTA	JOINT DICHTINGSSTUK	DICHTUNG, FLACH PAKNING	123G
13	1	J918175		1	CORE-OIL COOLER REFRI/ACEI A RENOVAR	RADIATORE OLIO DA RE CORE-OIL COOLER	RADIA/HUILE ARENOVEI CORE-OIL COOLER	ÖLKÜHLER, ZU ERNEUE CORE-OIL COOLER	T074
13	2	J944464		1	CORE-OIL COOLER REFRI/ACEI A RENOVAR	RADIATORE OLIO DA RE CORE-OIL COOLER	RADIA/HUILE ARENOVEI CORE-OIL COOLER	ÖLKÜHLER, ZU ERNEUE CORE-OIL COOLER	T074
14		J918174		1	GASKET JUNTA HERMETICA	GUARNIZIONE JUNTA	JOINT DICHTINGSSTUK	DICHTUNG, FLACH PAKNING	123G
		J934410		1	VALVE Inc. 15, 16 VALVULA	VALVOLA VALVULA	VALVE VALVE	VENTIL VALVE	P468
15		NSS		1	NOT SERVICED SEPARATELY Thermostat NO SE REPARA SEPARA	NON FORNITO SEPARAT NOT SERVICED SEPARA	NON FOURNI SEPAREMI NIET ALLEEN VERKRIJG	KEIN ERSATZTEIL NOT SERVICED SEPARA	064N
16		A77724		1	O-RING JUNTA HERMETICA	ANELLO TOROIDALE O-RING	JOINT THORIQUE O-RING	DICHTRING O-RING	055A
17		J934159		1	COVER TAPADERA	COPERCHIO COBERTA	COUVERCLE DEKSEL	DECKEL DÆKSEL	265C
18		J929011		1	GASKET JUNTA HERMETICA	GUARNIZIONE JUNTA	JOINT DICHTINGSSTUK	DICHTUNG, FLACH PAKNING	123G
19		J907860		4	BOLT M8 x 25 TORNILLO	BULLONE PARAFUSO	BOULON BOUT	SCHAUBENBOLZEN SKRUE	140B
20		221-1034		1	PLUG 1/2 PT TAPÓN	TAPPO BUJAO	BOUCHON PLUG	STOPFEN PROP	6400

(1) MX255
(2) MX285

02-25		p1	11/04

OIL PUMP AND OIL PAN
POMPA E VASCHETTA DELL'OLIO
POMPE ET CARTER D'HUILE
ÖLPUMPE UND ÖLWANNE

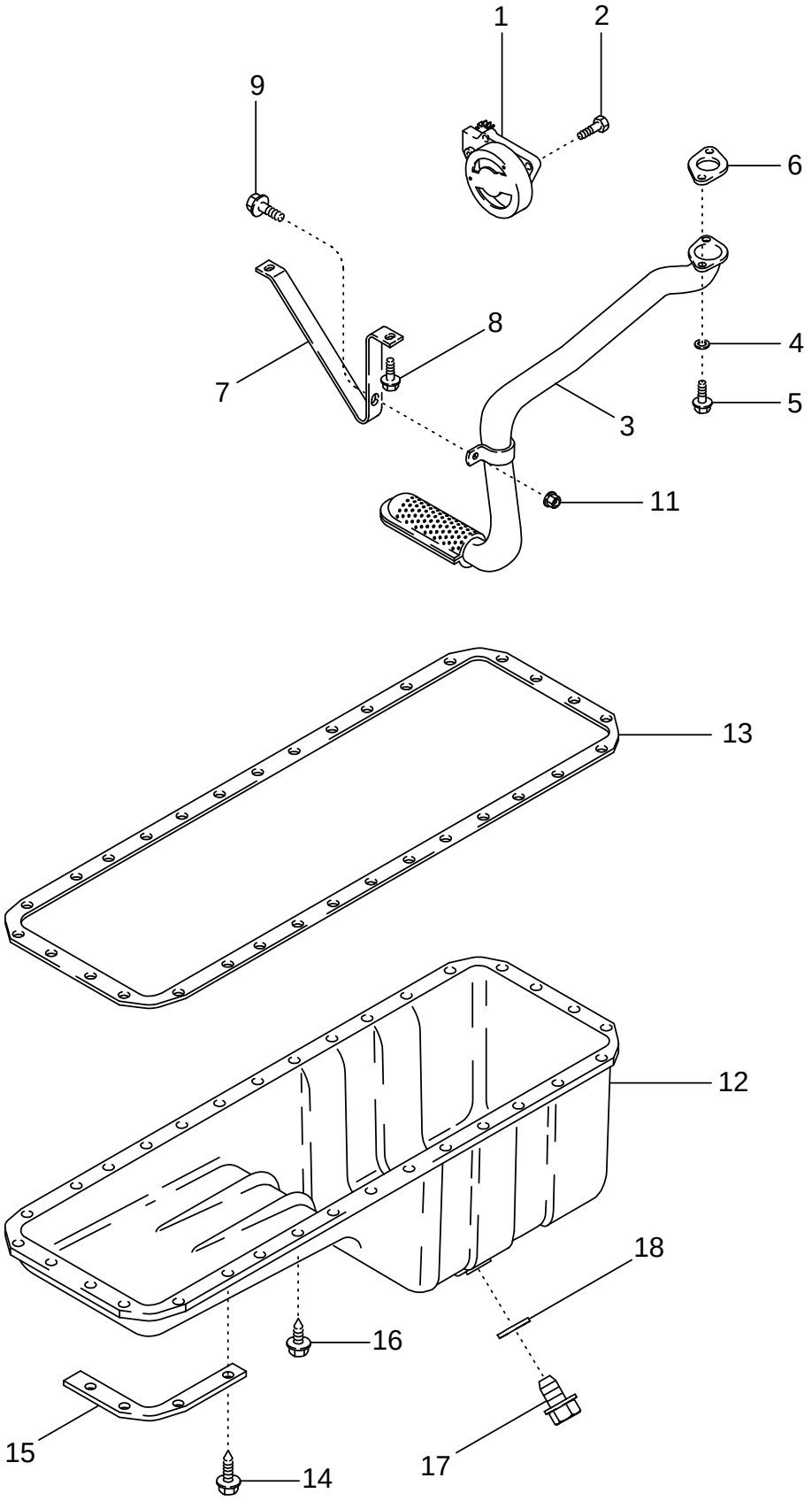

BANDEJA Y BOMBA DE ACEITE
BOMBA DE ÓLEO E DEPÓSITO DO ÓLEO
OLIEPOMP & CARTER
OLIEPUMPE OG BUNDKAR

R	N	P.N.	MOD	Q	Description Denominacion	Descrizione Denominação	Description Beschrijving	Bezeichnung Beskrivelse	L.C.
1		J948072		1	PUMP, ENGINE OIL New BOMBA DE ACEITE	POMPA OLIO MOTORE BOMBA DE OLEO	POMPE A HUILE OLIEPOMP	MOTORÖLPUMPE MOTOROLIEPUMPE	153P
2		J900677		4	BOLT M8 x 30 TORNILLO	BULLONE PARAFUSO	BOULON BOUT	SCHAUBENBOLZEN SKRUE	140B
3		J928828		1	TUBE ASSY. TUBO (CONJUNTO)	TUBO, COMPLESSIVO TUBO CONJUNTO	TUYAUTERIE TUBE ASSY.	ROHRLEITUNG TUBE ASSY.	P465
4		J926865		2	SPACER SEPARADOR	DISTANZIALE ESPACADOR	ENTRETOISE AFSTANDSRING	DISTANZSTÜCK AFSTANDSSTYKKE	075D
5		845-6030		2	SCREW M6 x 30 TORNILLO	VITE PARAFUSO	VIS SCHROEF	SCHRAUBE SKRUE	7450
6		J914302		1	GASKET JUNTA HERMETICA	GUARNIZIONE JUNTA	JOINT DICHTINGSSTUK	DICHTUNG, FLACH PAKNING	123G
7		J927611		1	BRACE TENSOR	MENARUOLA TENSOR	JAMBE-DE-FORCE BRACE	STREBE BRACE	0990
8		845-6015		2	SCREW M6 x 15; 8.8 TORNILLO	VITE PARAFUSO	VIS SCHROEF	SCHRAUBE SKRUE	7450
9		845-6020		1	SCREW M6 x 20; 8.8 TORNILLO	VITE PARAFUSO	VIS SCHROEF	SCHRAUBE SKRUE	7450
11		J906216		1	NUT M6 TUERCA	DADO PORCA	ECROU MOER	MUTTER MØTRIK	010D
12		J933347		1	PAN, ENGINE OIL CARTER DE ACEITE	COPPA OLIO CARTER DE OLEO	CARTER D'HUILE OLIECARTER	MOTORÖLWANNE BUNDKAR	274C
13		J938160		1	GASKET Oil Pan JUNTA HERMETICA	GUARNIZIONE JUNTA	JOINT DICHTINGSSTUK	DICHTUNG, FLACH PAKNING	123G
14		J907860		16	BOLT M8 x 25 TORNILLO	BULLONE PARAFUSO	BOULON BOUT	SCHAUBENBOLZEN SKRUE	140B
15		87414461		4	SUPPORT SOPORTE	SUPPORTO SUPORTE	SUPPORT STEUN	STÜTZE BESLAG	300S
16		J920400		16	BOLT M8 x 21 TORNILLO	BULLONE PARAFUSO	BOULON BOUT	SCHAUBENBOLZEN SKRUE	140B
17		J924147		1	PLUG M18 TAPÓN	TAPPO BUJÃO	BOUCHON PLUG	STOPFEN PROP	050T
18		J920773		1	WASHER, SEALING JUNTA HERMETICA	ROSETTA DI TENUTA JUNTA HERMETICA	RONDELLE D'ETANCHEI DICHTRING	DICHTSCHEIBE TAETNINGSSKIVE	133R

CYLINDER HEAD - COVER, MX210 AND MX230, BSN JAZ132841
TESTA DEI CILINDRI - COPERCHIO, MX210 E MX230, BSN JAZ132841
COUVRE-CULASSE, MX210 ET MX230, BSN JAZ132841
ZYLINDERKOPFABDECKUNG DER SERIEN MX210 UND MX230, BSN JAZ132841

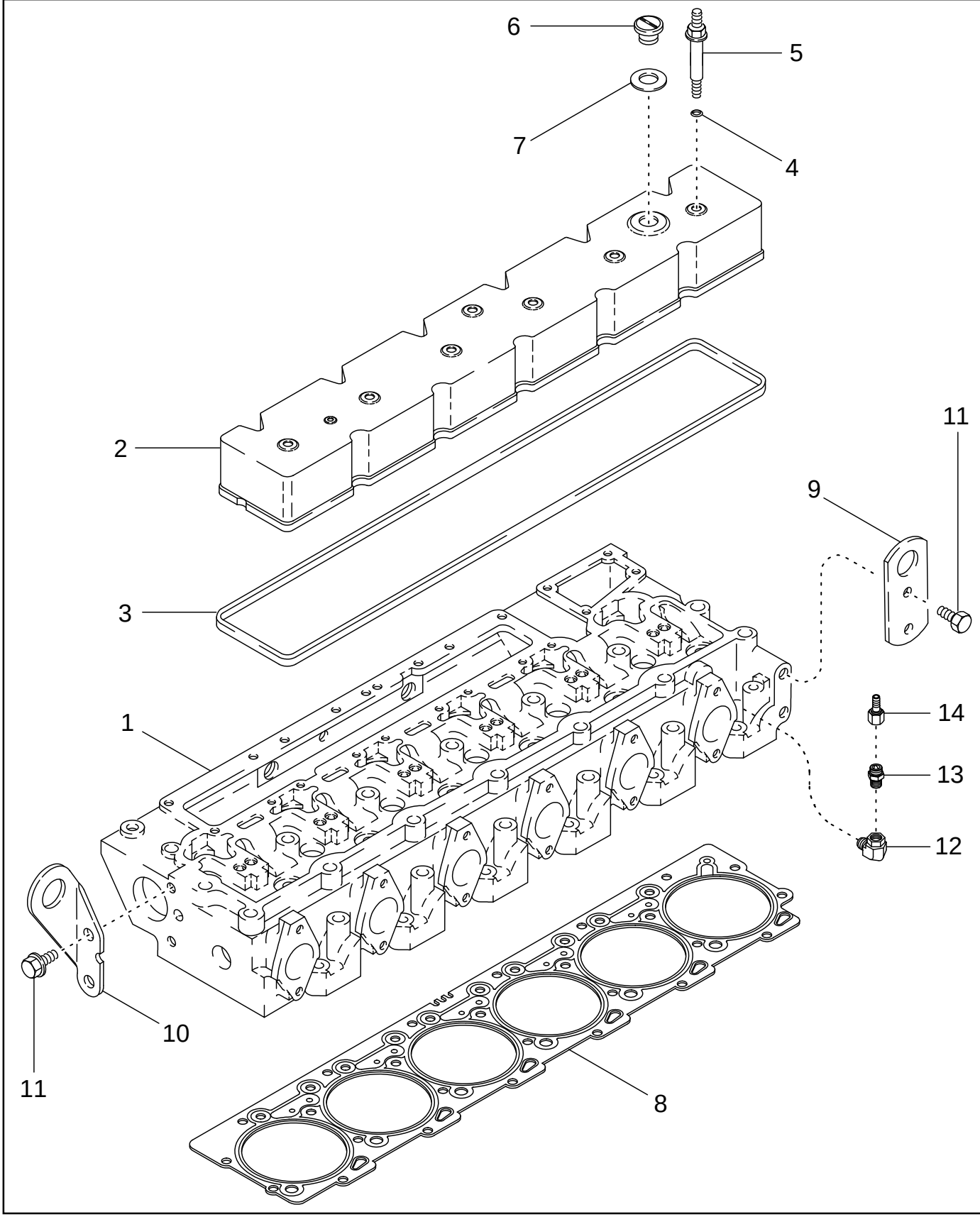

CULATA DEL CILINDRO - CUBIERTA, MX210 Y MX230, BSN JAZ132841
COBERTURA DA CABEÇA DO CILINDRO, MODELOS MX210 E MX230, BSN JAZ132841
CILINDERKOP - DEKSEL, MX210 EN MX230, BSN JAZ132841
TOPSTYKKE - DÆKSEL, MX210 OG MX230, BSN JAZ132841

R	N	P.N.	MOD	Q	Description Denominacion	Descrizione Denominação	Description Beschrijving	Bezeichnung Beskrivelse	L.C.
1	1	REF		1	INSTRUCTION Head MANUAL	ISTRUZIONI INSTRUCAO	NOTICE INSTRUCTION	HINWEIS SKO, INDRE	Z571
2		J930903		1	COVER, VALVE CUBRE VÁLVULA	COPERCHIO, VALVOLA TAMPA VALVULA	CACHE-CULBUTEURS COVER, VALVE	VENTILDECKEL VENTILDÆKSEL	P889
3		J905449		1	SEAL, RUBBER JUNTA DE CAUCHO	GUARNIZIONE DI GOMM JUNTAS	JOINT, CAOUTCHOUC DICHTING, RUBBER	GUMMIDICHTUNG GUMMITAETNING	122G
4		J910824		6	O-RING JUNTA HERMETICA	ANELLO TOROIDALE O-RING	JOINT THORIQUE O-RING	DICHTRING O-RING	055A
5		J922639		6	BOLT TORNILLO	BULLONE PARAFUSO	BOULON BOUT	SCHAUBENBOLZEN SKRUE	140B
6		J902468		1	PLUG TAPÓN	TAPPO BUJÃO	BOUCHON PLUG	STOPFEN PROP	050T
7		J902466		1	SEAL ANILLO DE CIERRE	ANELLO DI TENUTA ANEL DE VEDACAO	JOINT DICHTINGSRING	DICHTUNG PAKNINGSRING	132A
8		J938267		1	GASKET, CYLINDER HEAD JUNTA DE CULATA	GUARNIZIONE TESTA CI JUNTA DA CABECA	JOINT DE CULASSE CYLINDERKOPDICHTING	ZYLINDERKOPFDICHTUI TOPPAKNING	129G
8		J935586		1	GASKET, CYLINDER HEAD 0,25 mm JUNTA DE CULATA	GUARNIZIONE TESTA CI JUNTA DA CABECA	JOINT DE CULASSE CYLINDERKOPDICHTING	ZYLINDERKOPFDICHTUI TOPPAKNING	129G
9		J907861		1	BRACKET PIEZA DE SOPORTE	STAFFA BRACADEIRA	PATTE FIXATION STEUNBEUGEL	HALTERUNG BESLAG	225S
10		J906440		1	BRACKET PIEZA DE SOPORTE	STAFFA BRACADEIRA	PATTE FIXATION STEUNBEUGEL	HALTERUNG BESLAG	225S
11		844-12025		4	SCREW M12 x 25; 8.8 TORNILLO	VITE PARAFUSO	VIS SCHROEF	SCHRAUBE SKRUE	7450
12		217-1014		1	ELBOW 1/8 PT x fem PT CODO	GOMITO JOELHO	COUDE ELLEBOOG	KNIESTÜCK VINKELROER	085G
13		J911901		1	VALVE, CHECK VALVULA ANTIRRETORN	VALVOLA, DI RITEGNO VALVULA CHECAGEM	SOUPAPE ANTI RETOUR VALVE, CHECK	RUECKSCHLAGVENTIL VALVE, CHECK	P140
14		J911925		1	COUPLING CARDAN	ATTACCO ACOPLAMENTO	CARDAN COUPLING	KERNSTÜCK KARDANAKSEL	Z321

(1) See Figure 02-29

CYLINDER HEAD - COVER, MX210 AND MX230, ASN JAZ132841
TESTA DEI CILINDRI - COPERCHIO, MX210 E MX230, ASN JAZ132841
COUVRE-CULASSE, MX210 ET MX230, ASN JAZ132841
ZYLINDERKOPFABDECKUNG DER SERIEN MX210 UND MX230, ASN JAZ132841

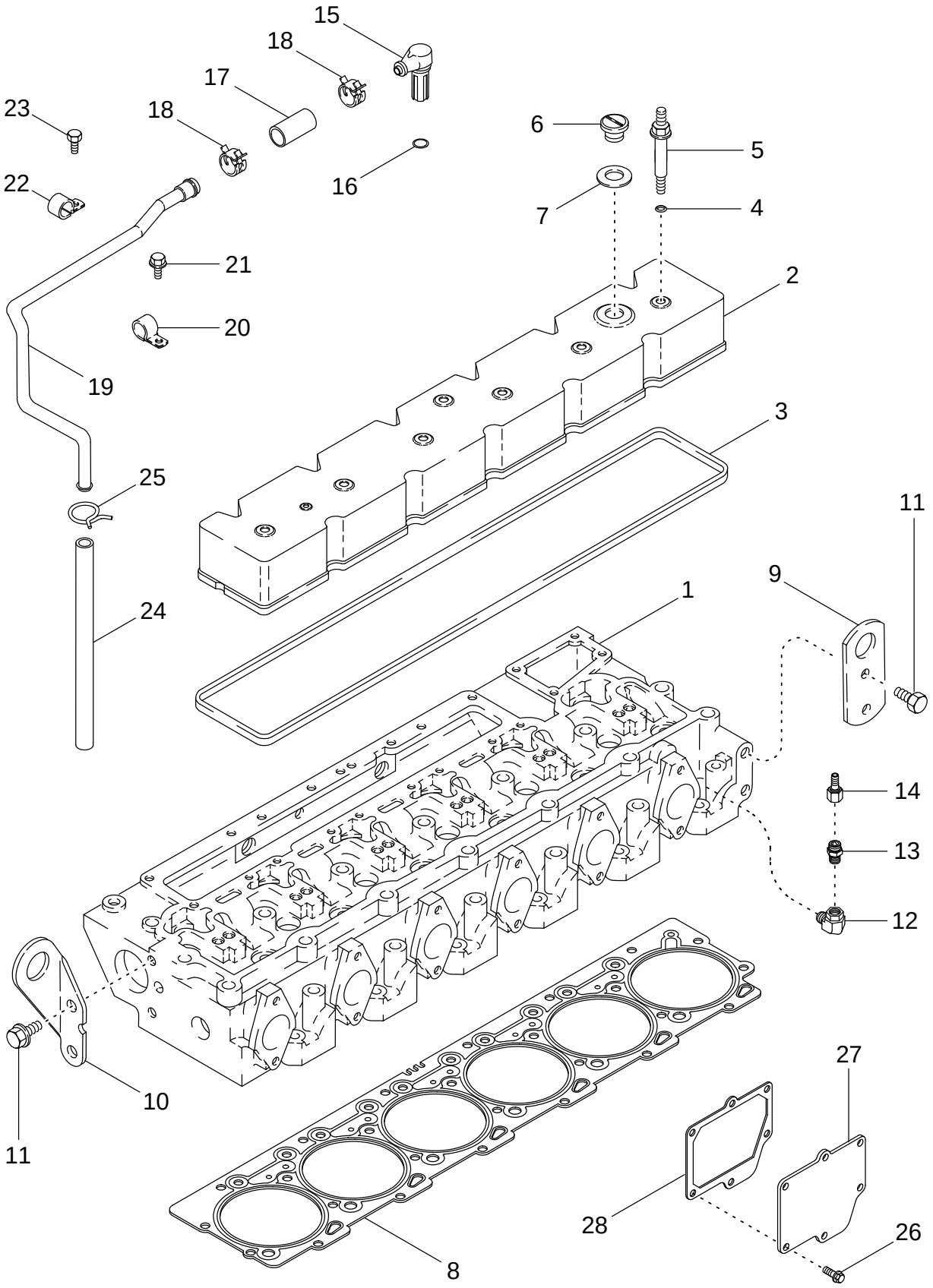

CULATA DEL CILINDRO - CUBIERTA, MX210 Y MX230, ASN JAZ132841
COBERTURA DA CABEÇA DO CILINDRO, MODELOS MX210 E MX230, ASN JAZ132841
CILINDERKOP - DEKSEL, MX210 EN MX230, ASN JAZ132841
TOPSTYKKE - DÆKSEL, MX210 OG MX230, ASN JAZ132841

R	N	P.N.	MOD	Q	Description Denominacion	Descrizione Denominação	Description Beschrijving	Bezeichnung Beskrivelse	L.C.
1	1	REF		1	INSTRUCTION Head MANUAL	ISTRUZIONI INSTRUCAO	NOTICE INSTRUCTION	HINWEIS SKO, INDRE	Z571
2		J930903		1	COVER, VALVE CUBRE VÁLVULA	COPERCHIO, VALVOLA TAMPA VALVULA	CACHE-CULBUTEURS COVER, VALVE	VENTILDECKEL VENTILDÆKSEL	P889
3		J905449		1	SEAL, RUBBER JUNTA DE CAUCHO	GUARNIZIONE DI GOMM JUNTAS	JOINT, CAOUTCHOUC DICHTING, RUBBER	GUMMIDICHTUNG GUMMITAETNING	122G
4		J910824		6	O-RING JUNTA HERMETICA	ANELLO TOROIDALE O-RING	JOINT THORIQUE O-RING	DICHTRING O-RING	055A
5		J922639		6	BOLT TORNILLO	BULLONE PARAFUSO	BOULON BOUT	SCHAUBENBOLZEN SKRUE	140B
6		J902468		1	PLUG TAPÓN	TAPPO BUJÃO	BOUCHON PLUG	STOPFEN PROP	050T
7		J902466		1	SEAL ANILLO DE CIERRE	ANELLO DI TENUTA ANEL DE VEDACAO	JOINT DICHTINGSRING	DICHTUNG PAKNINGSRING	132A
8		J938267		1	GASKET, CYLINDER HEAD JUNTA DE CULATA	GUARNIZIONE TESTA CI JUNTA DA CABECA	JOINT DE CULASSE CYLINDERKOPDICHTING	ZYLINDERKOPFDICHTUI TOPPAKNING	129G
8		J935586		1	GASKET, CYLINDER HEAD 0,25 mm JUNTA DE CULATA	GUARNIZIONE TESTA CI JUNTA DA CABECA	JOINT DE CULASSE CYLINDERKOPDICHTING	ZYLINDERKOPFDICHTUI TOPPAKNING	129G
9		J944290		1	BRACKET PIEZA DE SOPORTE	STAFFA BRACADEIRA	PATTE FIXATION STEUNBEUGEL	HALTERUNG BESLAG	225S
10		J906440		1	BRACKET PIEZA DE SOPORTE	STAFFA BRACADEIRA	PATTE FIXATION STEUNBEUGEL	HALTERUNG BESLAG	225S
11		844-12025		4	SCREW M12 x 25; 8.8 TORNILLO	VITE PARAFUSO	VIS SCHROEF	SCHRAUBE SKRUE	7450
12		217-1014		1	ELBOW 1/8 PT x fem PT CODO	GOMITO JOELHO	COUDE ELLEBOOG	KNIESTÜCK VINKELROER	085G
13		J911901		1	VALVE, CHECK VALVULA ANTIRRETORN	VALVOLA, DI RITEGNO VALVULA CHECAGEM	SOUPAPE ANTI RETOUR VALVE, CHECK	RUECKSCHLAGVENTIL VALVE, CHECK	P140
14		J911925		1	COUPLING CARDAN	ATTACCO ACOPLAMENTO	CARDAN COUPLING	KERNSTÜCK KARDANAKSEL	Z321
15		J935113		1	ELBOW CODO	GOMITO JOELHO	COUDE ELLEBOOG	KNIESTÜCK VINKELROER	085G
16		J936331		1	SEAL ANILLO DE CIERRE	ANELLO DI TENUTA ANEL DE VEDACAO	JOINT DICHTINGSRING	DICHTUNG PAKNINGSRING	132A
17		J930827		1	HOSE, LARGE 51 mm (2 in) MANGUITO	TUBO FLESSIBILE,GRDE MANGOTE	DURITE HOSE, LARGE	SCHLAUCH, GROSS HOSE, LARGE	Z336
18		J937613		2	CLAMP, HOSE ABRAZADERA MANGUEI	MORSETTO BRACADEIRA MANGUEI	BRIDE, FLEXIBLE CLAMP, HOSE	SCHLAUCHKLEMME CLAMP, HOSE	P729
19		87309036		1	TUBE ASSY. TUBO (CONJUNTO)	TUBO, COMPLESSIVO TUBO CONJUNTO	TUYAUTERIE TUBE ASSY.	ROHRLEITUNG TUBE ASSY.	P465
20		J907741		1	CLIP SUJETADOR	FERMAGLIO FIXADOR	CLIP KLEM	KLAMMER KLIPS	045F
21		J912072		1	SCREW, SELF TAPPING M8 st x 15 TORNILLO AUTOROSCA	VITE AUTOFILETTANTE PARAFUSO	VIS AUTO-TARAUDEUSE ZELFTAPPENDE SCHRO	SCHRAUBE, SELBSTSCH BOLT, SELVLAASENDES	062V

(1) See Figure 02-29

CYLINDER HEAD - COVER, MX210 AND MX230, ASN JAZ132841
TESTA DEI CILINDRI - COPERCHIO, MX210 E MX230, ASN JAZ132841
COUVRE-CULASSE, MX210 ET MX230, ASN JAZ132841
ZYLINDERKOPFABDECKUNG DER SERIEN MX210 UND MX230, ASN JAZ132841

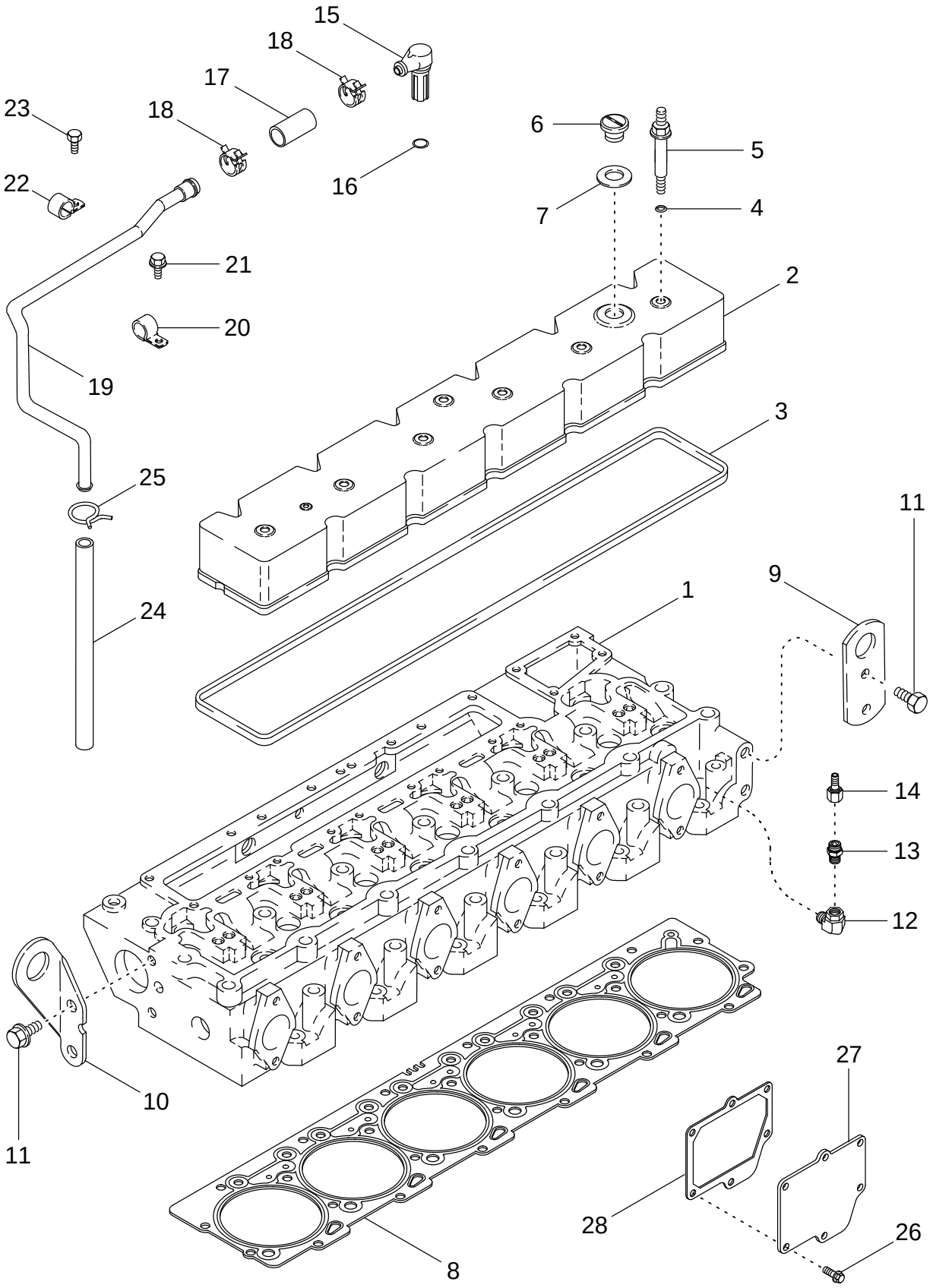

CULATA DEL CILINDRO - CUBIERTA, MX210 Y MX230, ASN JAZ132841
COBERTURA DA CABEÇA DO CILINDRO, MODELOS MX210 E MX230, ASN JAZ132841
CILINDERKOP - DEKSEL, MX210 EN MX230, ASN JAZ132841
TOPSTYKKE - DÆKSEL, MX210 OG MX230, ASN JAZ132841

R	N	P.N.	MOD	Q	Description Denominacion	Descrizione Denominação	Description Beschrijving	Bezeichnung Beskrivelse	L.C.
22		A77538		1	CLIP SUJETADOR	FERMAGLIO FIXADOR	CLIP KLEM	KLAMMER KLIPS	045F
23		844-12025		1	SCREW M12 x 25; 8.8 TORNILLO	VITE PARAFUSO	VIS SCHROEF	SCHRAUBE SKRUE	7450
24		413826A1		1	HOSE ASSY. 920 mm (36-7/32 in) MANGUERA (CONJUNTO	GRUPPO TUBO FLESS MANGUEIRA CONJUNTO	FLEXIBLE (ASSEMBLE) HOSE ASSY.	SCHLAUCH (KPLT.) HOSE ASSY.	P457
25		214-1314		1	CLAMP COLLAR	MORSETTO BRACADEIRA	COLLIER CLAMP	SCHELLE CLAMP	1640
26		87409160		1	SCREW M6 x 16 mm; 10.9 TORNILLO	VITE PARAFUSO	VIS SCHROEF	SCHRAUBE SKRUE	040V
27		87413814		1	COVER COBERTURA	COPERTURA COBERTURA	COUVERTURE AFSCHERMING	ABDECKUNG AFDÆKNING	271C
28		87436828		1	GASKET JUNTA HERMETICA	GUARNIZIONE JUNTA	JOINT DICHTINGSSTUK	DICHTUNG, FLACH PAKNING	123G

CYLINDER HEAD - COVER, MX255 AND MX285
TESTA DEI CILINDRI - COPERCHIO, MX255 E MX285
COUVRE-CULASSE, MX255 ET MX285
ZYLINDERKOPFABDECKUNG DER SERIEN MX255 UND MX285

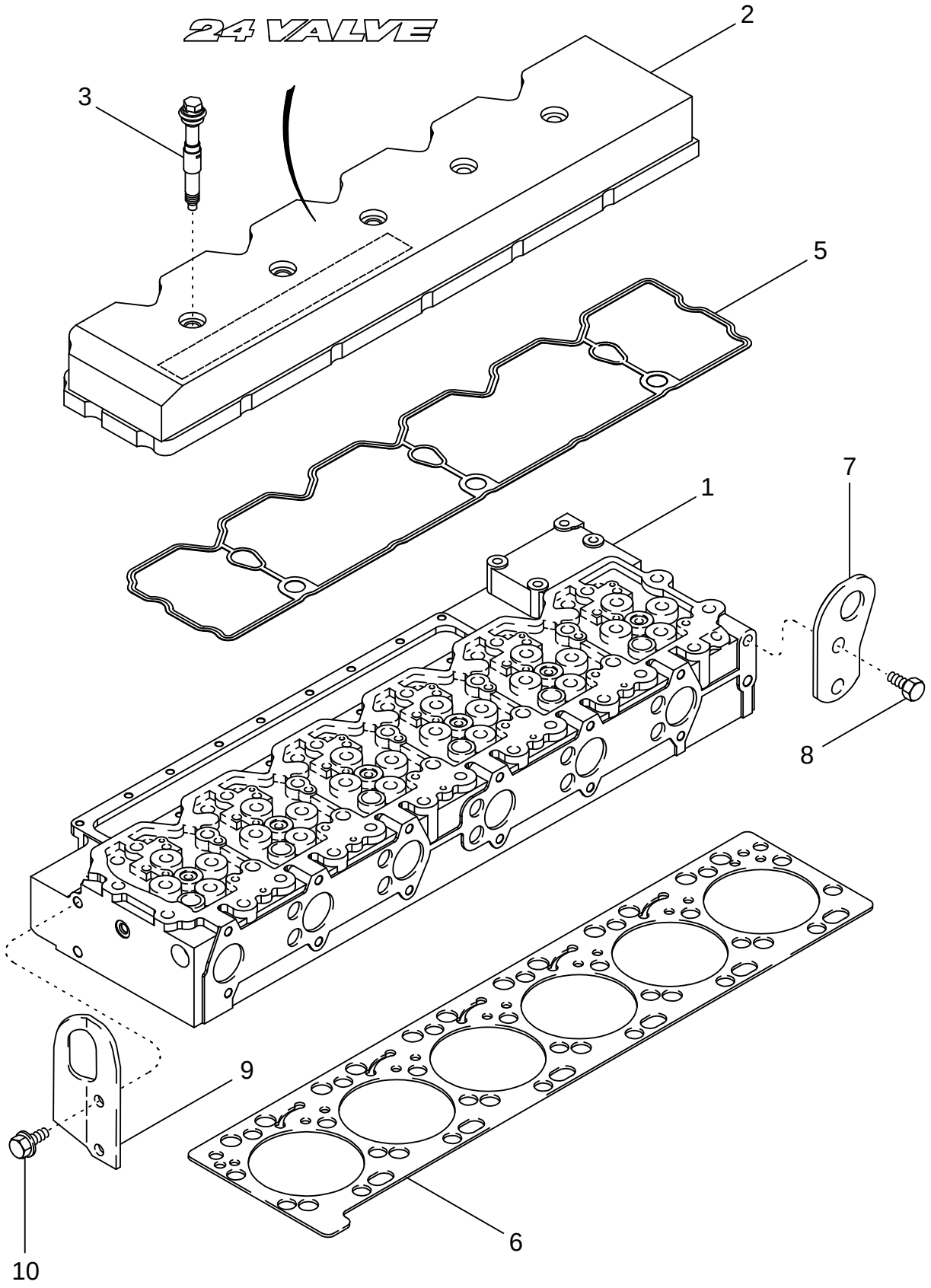

CULATA DEL CILINDRO - CUBIERTA, MX255 Y MX285
COBERTURA DA CABEÇA DO CILINDRO, MODELOS MX255 E MX285
CILINDERKOP - DEKSEL, MX255 EN MX285
TOPSTYKKE - DÆKSEL, MX255 OG MX285

R	N	P.N.	MOD	Q	Description Denominacion	Descrizione Denominação	Description Beschrijving	Bezeichnung Beskrivelse	L.C.
1	1	REF		1	INSTRUCTION Head, Cylinder				
						ISTRUZIONI	NOTICE	HINWEIS	Z571
					MANUAL	INSTRUCAO	INSTRUCTION	SKO, INDRE	
2		J938445		1	COVER, VALVE	COPERCHIO, VALVOLA	CACHE-CULBUTEURS	VENTILDECKEL	P889
					CUBRE VÁLVULA	TAMPA VALVULA	COVER, VALVE	VENTILDÆKSEL	
3		J990876		5	ISOLATOR	DISPOSITIVO ANTIVIB	ISOLATEUR	ISOLATOR	Z082
					AISLADOR	ISOLADOR	ISOLATOR	ISOLATOR	
5		J939284		1	GASKET	GUARNIZIONE	JOINT	DICHTUNG, FLACH	123G
					JUNTA HERMETICA	JUNTA	DICHTINGSSTUK	PAKNING	
6		J943366		1	GASKET, CYLINDER HEAD				
						GUARNIZIONE TESTA CI	JOINT DE CULASSE	ZYLINDERKOPFDICHTUI	129G
					JUNTA DE CULATA	JUNTA DA CABECA	CYLINDERKOPDICHTING	TOPPAKNING	
7		J944239		1	BRACKET Front	STAFFA	PATTE FIXATION	HALTERUNG	225S
					PIEZA DE SOPORTE	BRACADEIRA	STEUNBEUGEL	BESLAG	
8		614-12025		2	SCREW M12 x 25; 8,8	VITE	VIS	SCHRAUBE	P136
					TORNILLO	PARAFUSO	SCHROEF	SKRUE	
9		J944290		1	BRACKET Rear	STAFFA	PATTE FIXATION	HALTERUNG	225S
					PIEZA DE SOPORTE	BRACADEIRA	STEUNBEUGEL	BESLAG	
10		844-12025		2	SCREW M12 x 25; 8.8	VITE	VIS	SCHRAUBE	7450
					TORNILLO	PARAFUSO	SCHROEF	SKRUE	

(1) See Figure 02-30

CYLINDER HEAD - VALVE MECHANISM, MX210 AND MX230
TESTA DEI CILINDRI - MECCANISMO DELLE VALVOLE, MX210 E MX230
CULASSE - MÉCANISME DE SOUPAPES, MX210 ET MX230
ZYLINDERKOPF-VENTILMECHANISMUS DER SERIEN MX210 UND MX230

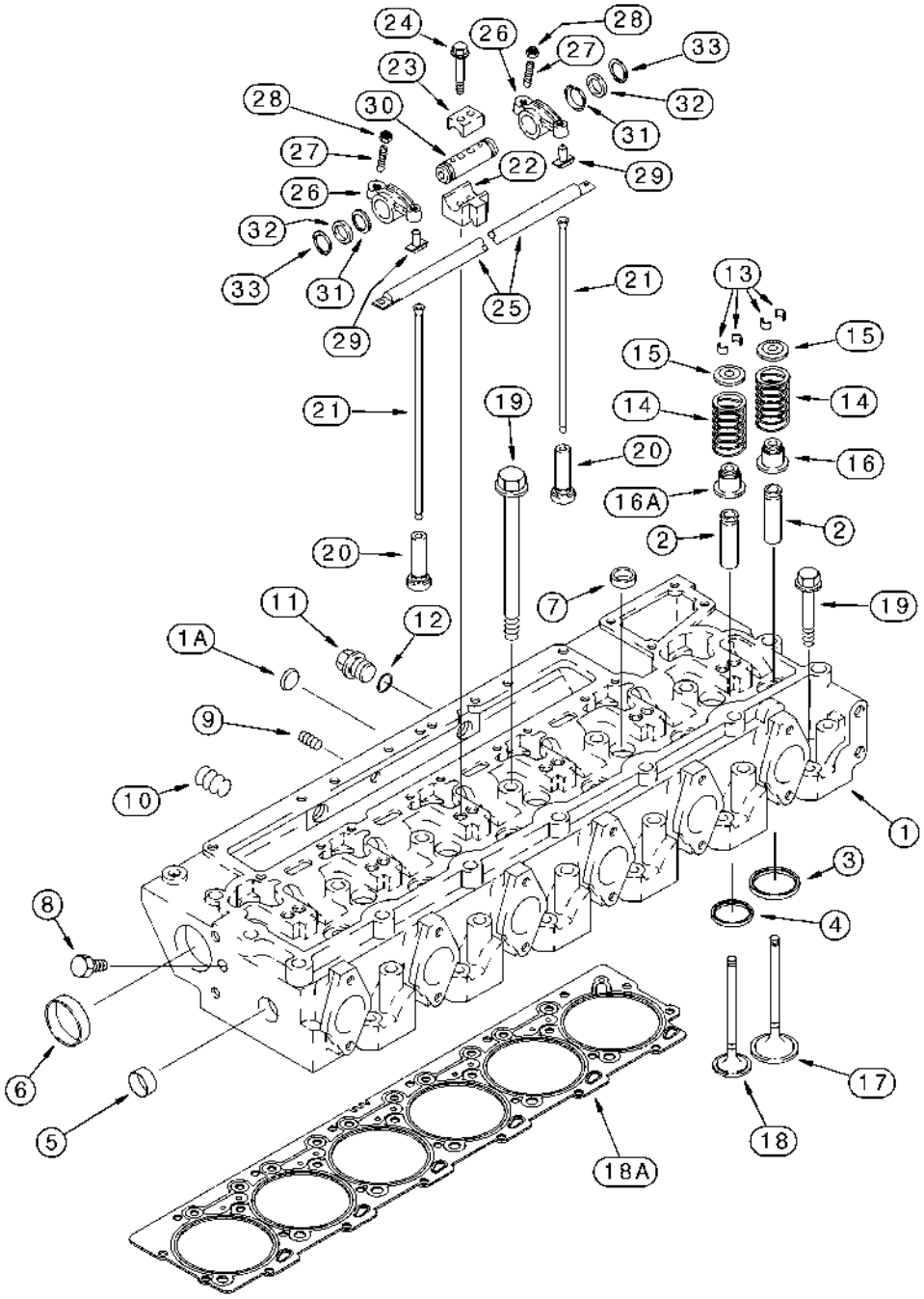

CABEÇA DO CILINDRO - MECANISMO DAS VÁLVULAS, MODELOS MX210 E MX230
CABEÇA DO CILINDRO - MECANISMO DAS VÁLVULAS, MODELOS MX210 E MX230
CILINDERKOP - KLEPMECHANISME, MX210 EN MX230
TOPSTYKKE - VENTILMEKANISME, MX210 OG MX230

R	N	P.N.	MOD	Q	Description Denominacion	Descrizione Denominação	Description Beschrijving	Bezeichnung Beskrivelse	L.C.
		86990822		1	HEAD Cylinder, With Valves, Inc. 1 - 18				
						TESTA	TÊTE	KOPF	4180
					CULATA	CABECA	HEAD	HOVED	
1		J936180		1	HEAD ASSY. Cylinder, Without Valves, Inc. 1A - 7				
						TESTA, COMPLESSIVO	TETE (ASSEMBLEE)	KOPF (KPLT.)	P605
					CABEZA (CONJUNTO)	CABECA CONJUNTO	HEAD ASSY.	HEAD ASSY.	
1A		J912900		1	PLUG 24 mm	TAPPO	BOUCHON	STOPFEN	050T
					TAPÓN	BUJÃO	PLUG	PROP	
2		J923564		12	GUIDE, VALVE	GUIDA VALVOLE	GUIDE-SOUPAPE	VENTILFÜHRUNG	150G
					GUIA DE VALVULA	GUIA DE VALVULA	KLEPGELEIDER	VENTILSTYR	
3		J924582		6	ARMREST Intake	APPOGGIABRACCIA	ACCOUDOIR	ARMLEHNE	074A
					APOYABRAZOS	APOIO DE BRAÇOS	ARMLEUNING, BESTUUF	ARMLÆN	
3		J925468		6	SEAT, VALVE 0,25 mm, Intake, Oversize				
						ALLOGGIAMENTO, VALV	SIEGE DE SOUPAPE	VENTILSITZ	P839
					ASIENTO DE VALVULA	ASSENTO VALVULA	SEAT, VALVE	SEAT, VALVE	
3		J925470		6	SEAT, VALVE 0,50 mm, Intake, Oversize				
						ALLOGGIAMENTO, VALV	SIEGE DE SOUPAPE	VENTILSITZ	P839
					ASIENTO DE VALVULA	ASSENTO VALVULA	SEAT, VALVE	SEAT, VALVE	
4		J929005		6	INSERT Exhaust	INSERTO	INSERT	EINSATZ	055I
					INTRODUCTOR	POSTICO	TUSSENSTUK	INDSATS	
4		J929006		6	INSERT 0,25 mm, Exhaust, Oversize				
						INSERTO	INSERT	EINSATZ	055I
					INTRODUCTOR	POSTICO	TUSSENSTUK	INDSATS	
4		J929007		6	INSERT 0,50 mm, Exhaust, Oversize				
						INSERTO	INSERT	EINSATZ	055I
					INTRODUCTOR	POSTICO	TUSSENSTUK	INDSATS	
5		J920443		1	PLUG 30 mm	TAPPO	BOUCHON	STOPFEN	050T
					TAPÓN	BUJÃO	PLUG	PROP	
6		A77782		2	PLUG 58 mm	TAPPO	BOUCHON	STOPFEN	050T
					TAPÓN	BUJÃO	PLUG	PROP	
7		41-1616		5	PLUG 1 in dia	TAPPO	BOUCHON	STOPFEN	6400
					TAPÓN	BUJAO	PLUG	PROP	
8		217-426		1	PLUG 1/16 PT	TAPPO	BOUCHON	STOPFEN	6400
					TAPÓN	BUJAO	PLUG	PROP	
9		217-432		1	PLUG 1/4 PT	TAPPO	BOUCHON	STOPFEN	050T
					TAPÓN	BUJÃO	PLUG	PROP	
10		217-438		2	PLUG 1/2 PT	TAPPO	BOUCHON	STOPFEN	050T
					TAPÓN	BUJÃO	PLUG	PROP	
11		J924148		2	PLUG M22	TAPPO	BOUCHON	STOPFEN	050T
					TAPÓN	BUJÃO	PLUG	PROP	
12		J902425		2	WASHER	ROSETTA PIANA	RONDELLE	BEILAGSCHEIBE	131R
					ARANDELA	ANILHA	SLUITRING	FLADSKIVE	
13		J901177		24	KEY	LINGUETTA	CLAVETTE	SCHLÜSSEL	060L
					CHAVETA	CHAVETA	INLEGSPIE	KILE	
14		J991085		12	SPRING, VALVE Valve	MOLLA, VALVOLA	RESSORT, SOUPAPE	VENTILFEDER	P463
					MUELLE, VALVULA	MUELLE, VÁLVULA	SPRING, VALVE	VENTILFJEDER	
15		J912976		12	RETAINER	RITEGNO	RETENEUR	HALTEVORRICHTUNG	109R
					RETENEDOR	RETENTOR	HOUDER	HOLDER	

CYLINDER HEAD - VALVE MECHANISM, MX210 AND MX230
TESTA DEI CILINDRI - MECCANISMO DELLE VALVOLE, MX210 E MX230
CULASSE - MÉCANISME DE SOUPAPES, MX210 ET MX230
ZYLINDERKOPF-VENTILMECHANISMUS DER SERIEN MX210 UND MX230

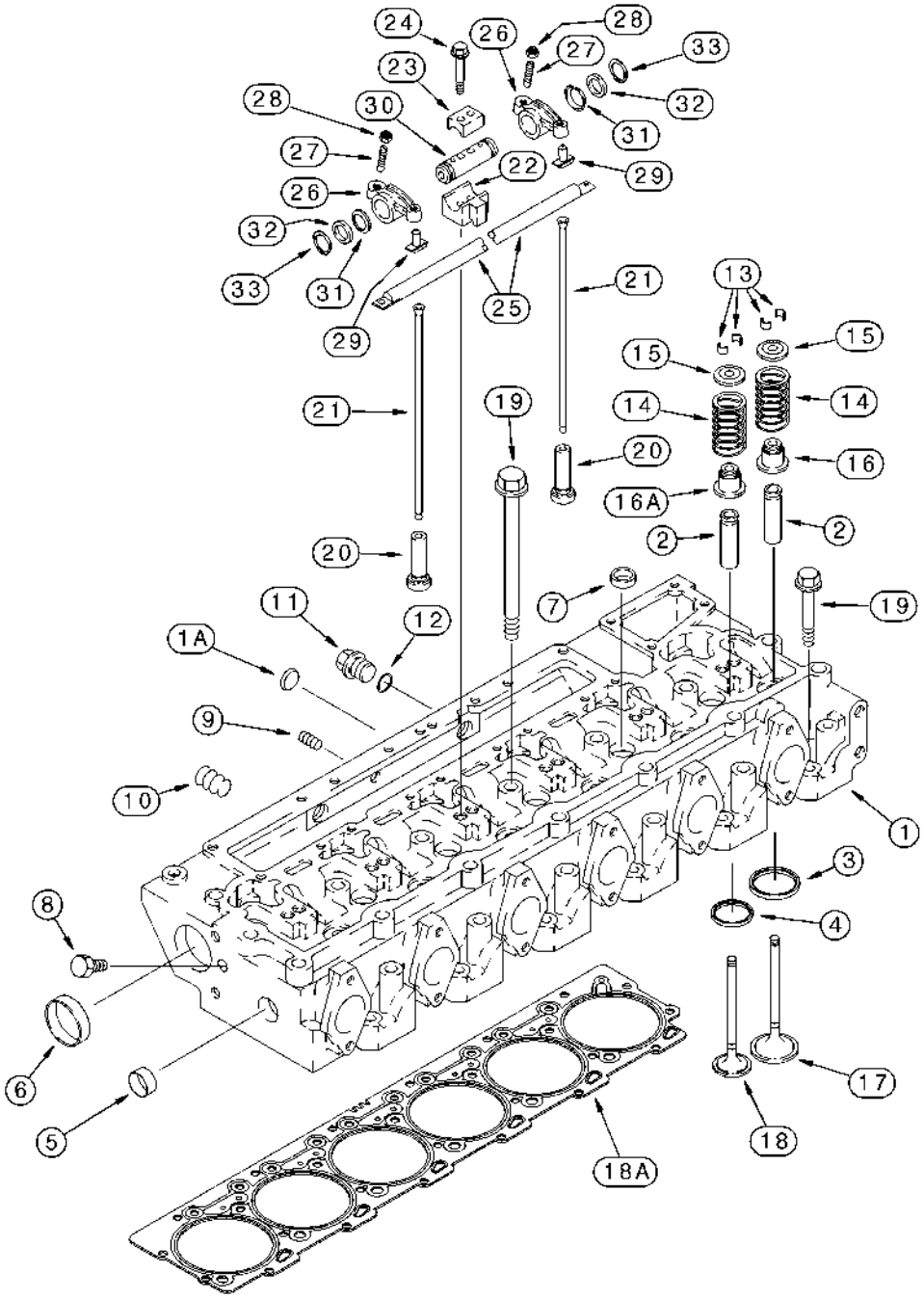

CABEÇA DO CILINDRO - MECANISMO DAS VÁLVULAS, MODELOS MX210 E MX230
CABEÇA DO CILINDRO - MECANISMO DAS VÁLVULAS, MODELOS MX210 E MX230
CILINDERKOP - KLEPMECHANISME, MX210 EN MX230
TOPSTYKKE - VENTILMEKANISME, MX210 OG MX230

R	N	P.N.	MOD	Q	Description Denominacion	Descrizione Denominação	Description Beschrijving	Bezeichnung Beskrivelse	L.C.
16		J927642		6	SEAL Intake, Valve ANILLO DE CIERRE	ANELLO DI TENUTA ANEL DE VEDACAO	JOINT DICHTINGSRING	DICHTUNG PAKNINGSRING	132A
16A		J927642		6	SEAL Exhaust, Valve ANILLO DE CIERRE	ANELLO DI TENUTA ANEL DE VEDACAO	JOINT DICHTINGSRING	DICHTUNG PAKNINGSRING	132A
17		J924492		6	VALVE, ENGINE, INLET, STD VÁLVULA DE ADMISIÓN	VALVOLA DI ASPIRAZIOI VALVULA DE ADMISSAO	SOUPAPE D'ADMISSION INLAATKLEP	EINLASSVENTIL STANDA INDSUGNINGSVENTIL	111V
18		J921444		6	VALVE, ENG EXHAUST, STD VALVULA DE ESCAPE	VALVOLA DI SCARICO VALVULA DE ESCAPE	SOUPAPE D'ECHAPPEMI UITLAATKLEP	AUSPUFFVENTIL, STANI UDSTOEDNINGSVENTIL	112V
18A	1	J938267		1	GASKET, CYLINDER HEAD JUNTA DE CULATA	GUARNIZIONE TESTA CI JUNTA DA CABECA	JOINT DE CULASSE CYLINDERKOPDICHTING	ZYLINDERKOPFDICHTUI TOPPAKNING	129G
19		J917728		14	BOLT 160 mm TORNILLO	BULLONE PARAFUSO	BOULON BOUT	SCHAUBENBOLZEN SKRUE	140B
19		J917729		12	SCREW 80 mm TORNILLO	VITE PARAFUSO	VIS SCHROEF	SCHRAUBE SKRUE	040V
20		J931623		12	TAPPET EMPUJADOR	PUNTERIA IMPULSOR	POUSSOIR LAGER, ROL	ROULEMENT A ROULEA VENTILLOEFTER	240P
21		J905194		12	ROD, PUSH VARILLA DE EMPUJE	ASTA, SPINTA HASTE DE IMPULSO	TIGE DE CULBUTEUR ROD, PUSH	SCHUBSTANGE SKUBBESTANG	P307
22		J905870		6	SUPPORT ASSY. APOYADERO (CONJUNT	SUPPORTO, COMPLESS SUPORTE CONJUNTO	SUPPORT (ASSEMBLE) SUPPORT ASSY.	STUETZE (KPLT.) SUPPORT ASSY.	P427
23		J901693		6	CLAMP GRAPON	MORSETTO BRACADEIRA	CRAMPON CLAMP	KRAMPE CLAMP	Z458
24		868-10065		12	SCREW M10 x 65; 12.9 TORNILLO	VITE PARAFUSO	VIS SCHROEF	SCHRAUBE SKRUE	7450
25		J919677		1	MANIFOLD COLECTOR	COLLETTORE COLECTOR	COLLECTEUR MANIFOLD	KRÜMMER VERDEELSTUK	198C
26		J901717		12	ROCKER Inc. 27 - 29 BASCULADOR	ATTUATORE BASCULHADOR	CULBUTEUR ROCKER	KIPPHEBEL ROCKER	P055
27		J937438		1	SCREW TORNILLO	VITE PARAFUSO	VIS SCHROEF	SCHRAUBE SKRUE	040V
28		A77902		1	NUT 3/8 - 24 NF TUERCA	DADO PORCA	ECROU MOER	MUTTER MØTRIK	010D
29		NSS		1	NOT SERVICED SEPARATELY Insert NO SE REPARA SEPARA	NON FORNITO SEPARAT NOT SERVICED SEPARA	NON FOURNI SEPAREMI NIET ALLEEN VERKRIJG	KEIN ERSATZTEIL NOT SERVICED SEPARA	064N
30		J919435		6	SHAFT EJE	ALBERO VEIO	ARBRE AS	WELLE AKSEL	016A
31		J906100		12	CUP, SPRING MUELLE	COPPA, MOLLA CAPA DE MOLA	CUVETTE RESSORT CUP, SPRING	FEDERTELLER BOLDSKÅL	P718
32		J907206		12	WASHER ARANDELA	ROSETTA PIANA ANILHA	RONDELLE SLUITRING	BEILAGSCHEIBE FLADSKIVE	131R
33		100-1187		12	CIRCLIP No. 87 RETENEDOR	ANELLO DI RITEGNO FREIO DE MOLA	CIRCLIP BOORGVEER	HALTERING LÃSERING	P019

(1) See Figure 02-26

CYLINDER HEAD - VALVE MECHANISM, MX255 AND MX285
TESTA DEI CILINDRI - MECCANISMO DELLE VALVOLE, MX255 E MX285
CULASSE - MÉCANISME DE SOUPAPES, MX255 ET MX285
ZYLINDERKOPF-VENTILMECHANISMUS DER SERIEN MX255 UND MX285

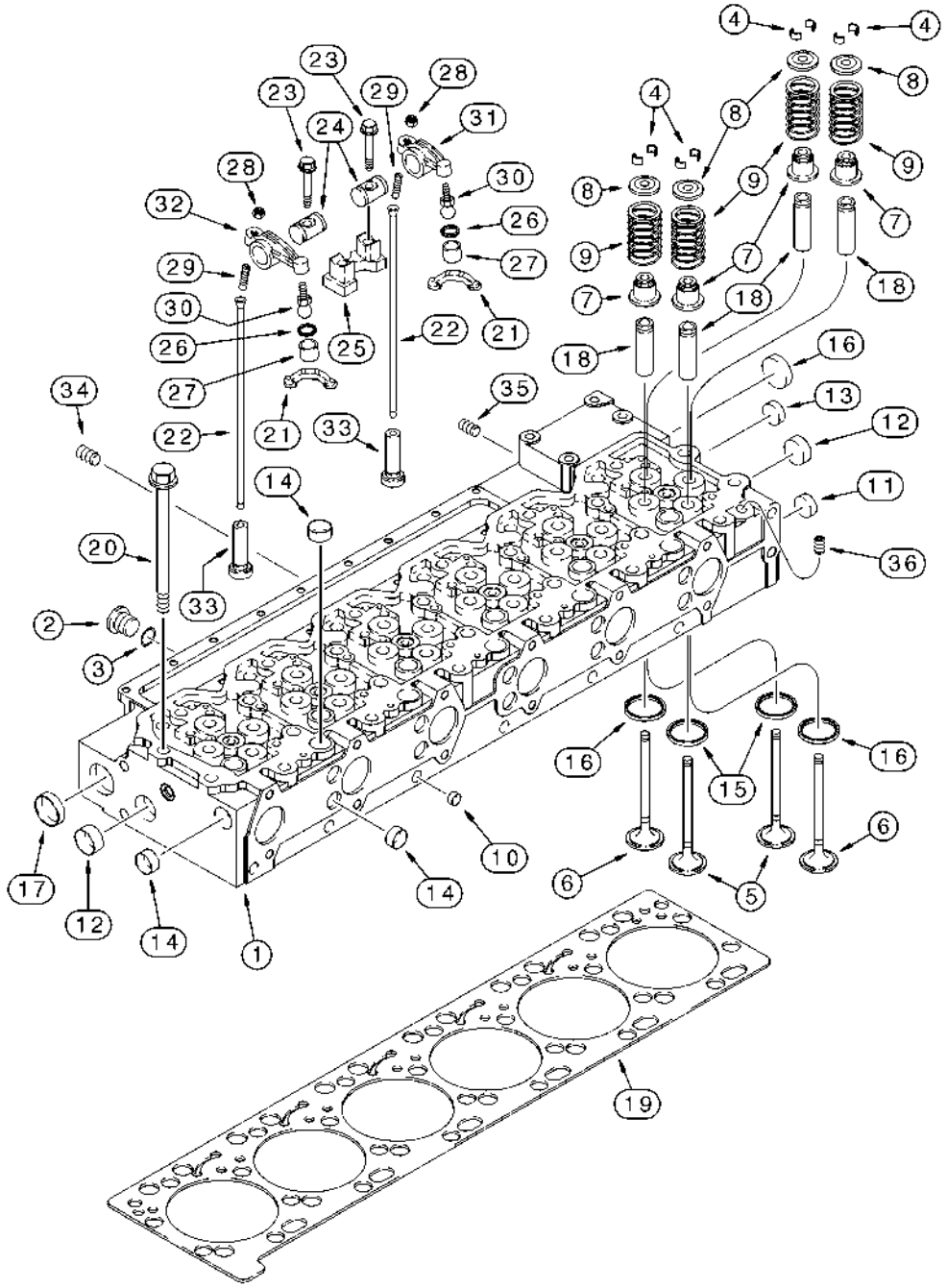

CULATA DEL CILINDRO - MECANISMO DE LA VÁLVULA, MX255 Y MX285
CABEÇA DO CILINDRO - MECANISMO DAS VÁLVULAS, MODELOS MX255 E MX285
CILINDERKOP - KLEPMECHANISME, MX255 EN MX285
TOPSTYKKE - VENTILMEKANISME, MX255 OG MX285

R	N	P.N.	MOD	Q	Description Denominacion	Descrizione Denominação	Description Beschrijving	Bezeichnung Beskrivelse	L.C.
		J948583		1	CYLINDER HEAD Cylinder, With Valves, Inc. 1 - 18				
						TESTA CILINDRI	CULASSE	ZYLINDERKOPF	113T
					CULATA	CABECA DE MOTOR	CYLINDERKOP	CYLINDERHOVED	
1		J945022		1	CYLINDER HEAD Cylinder, Without Valves, Inc. 10 - 18				
						TESTA CILINDRI	CULASSE	ZYLINDERKOPF	113T
					CULATA	CABECA DE MOTOR	CYLINDERKOP	CYLINDERHOVED	
2		J678923		1	PLUG Inc. 3	TAPPO	BOUCHON	STOPFEN	050T
					TAPÓN	BUJÃO	PLUG	PROP	
3		637-72081		1	O-RING 8,1 ID x 1,6 mm	ANELLO TOROIDALE	JOINT TORIQUE	O-RING	7176
					JUNTA HERMETICA	ANEL O	O-RING	O-RING	
4		J900250		48	RETAINER	RITEGNO	RETENEUR	HALTEVORRICHTUNG	109R
					RETENEDOR	RETENTOR	HOUDER	HOLDER	
5		J942588		12	VALVE, ENGINE, INLET, STD				
						VALVOLA DI ASPIRAZIOI	SOUPAPE D'ADMISSION	EINLASSVENTIL STANDA	111V
					VÁLVULA DE ADMISIÓN	VALVULA DE ADMISSAO	INLAATKLEP	INDSUGNINGSVENTIL	
6		J942589		12	VALVE, ENG EXHAUST, STD				
						VALVOLA DI SCARICO	SOUPAPE D'ECHAPPEMI	AUSPUFFVENTIL, STANI	112V
					VALVULA DE ESCAPE	VALVULA DE ESCAPE	UITLAATKLEP	UDSTOEDNINGSVENTIL	
7		J943888		24	SEAL Valve	ANELLO DI TENUTA	JOINT	DICHTUNG	132A
					ANILLO DE CIERRE	ANEL DE VEDACAO	DICHTINGSRING	PAKNINGSRING	
8		J944452		24	RETAINER	RITEGNO	RETENEUR	HALTEVORRICHTUNG	109R
					RETENEDOR	RETENTOR	HOUDER	HOLDER	
9		J944711		24	SPRING Valve	MOLLA	RESSORT	FEDER	100M
					RESORTE	MOLA	VEER	FJEDER	
10		A77552		6	PLUG 11,5 mm	TAPPO	BOUCHON	STOPFEN	050T
					TAPÓN	BUJÃO	PLUG	PROP	
11		A77590		2	PLUG 28,7 mm	TAPPO	BOUCHON	STOPFEN	050T
					TAPÓN	BUJÃO	PLUG	PROP	
12		J900955		1	PLUG 10 mm OD	TAPPO	BOUCHON	STOPFEN	050T
					TAPÓN	BUJÃO	PLUG	PROP	
13		J907555		1	PLUG 1/4-18 PT	TAPPO	BOUCHON	STOPFEN	050T
					TAPÓN	BUJÃO	PLUG	PROP	
14		J920706		17	PLUG 22 mm OD	TAPPO	BOUCHON	STOPFEN	050T
					TAPÓN	BUJÃO	PLUG	PROP	
15		J940152		12	INSERT Intake	INSERTO	INSERT	EINSATZ	055I
					INTRODUCTOR	POSTICO	TUSSENSTUK	INDSATS	
16		J940153		12	INSERT Exhaust	INSERTO	INSERT	EINSATZ	055I
					INTRODUCTOR	POSTICO	TUSSENSTUK	INDSATS	
17		41-1024		2	PLUG 1-1/2	TAPPO	BOUCHON	STOPFEN	6400
					TAPÓN	BUJAO	PLUG	PROP	
18		J948102		24	GUIDE, VALVE	GUIDA VALVOLE	GUIDE-SOUPAPE	VENTILFÜHRUNG	150G
					GUIA DE VALVULA	GUIA DE VALVULA	KLEPGELEIDER	VENTILSTYR	
19		J943366		1	GASKET, CYLINDER HEAD				
						GUARNIZIONE TESTA CI	JOINT DE CULASSE	ZYLINDERKOPFDICHTUI	129G
					JUNTA DE CULATA	JUNTA DA CABECA	CYLINDERKOPDICHTIN(	TOPPAKNING	
20		J917728		26	BOLT 160 mm	BULLONE	BOULON	SCHAUBENBOLZEN	140B
					TORNILLO	PARAFUSO	BOUT	SKRUE	
21		J943445		12	VALVE	VALVOLA	SOUPAPE	VENTIL	9620
					VALVULA	VALVULA	VALVE	VALVE	

CYLINDER HEAD - VALVE MECHANISM, MX255 AND MX285
TESTA DEI CILINDRI - MECCANISMO DELLE VALVOLE, MX255 E MX285
CULASSE - MÉCANISME DE SOUPAPES, MX255 ET MX285
ZYLINDERKOPF-VENTILMECHANISMUS DER SERIEN MX255 UND MX285

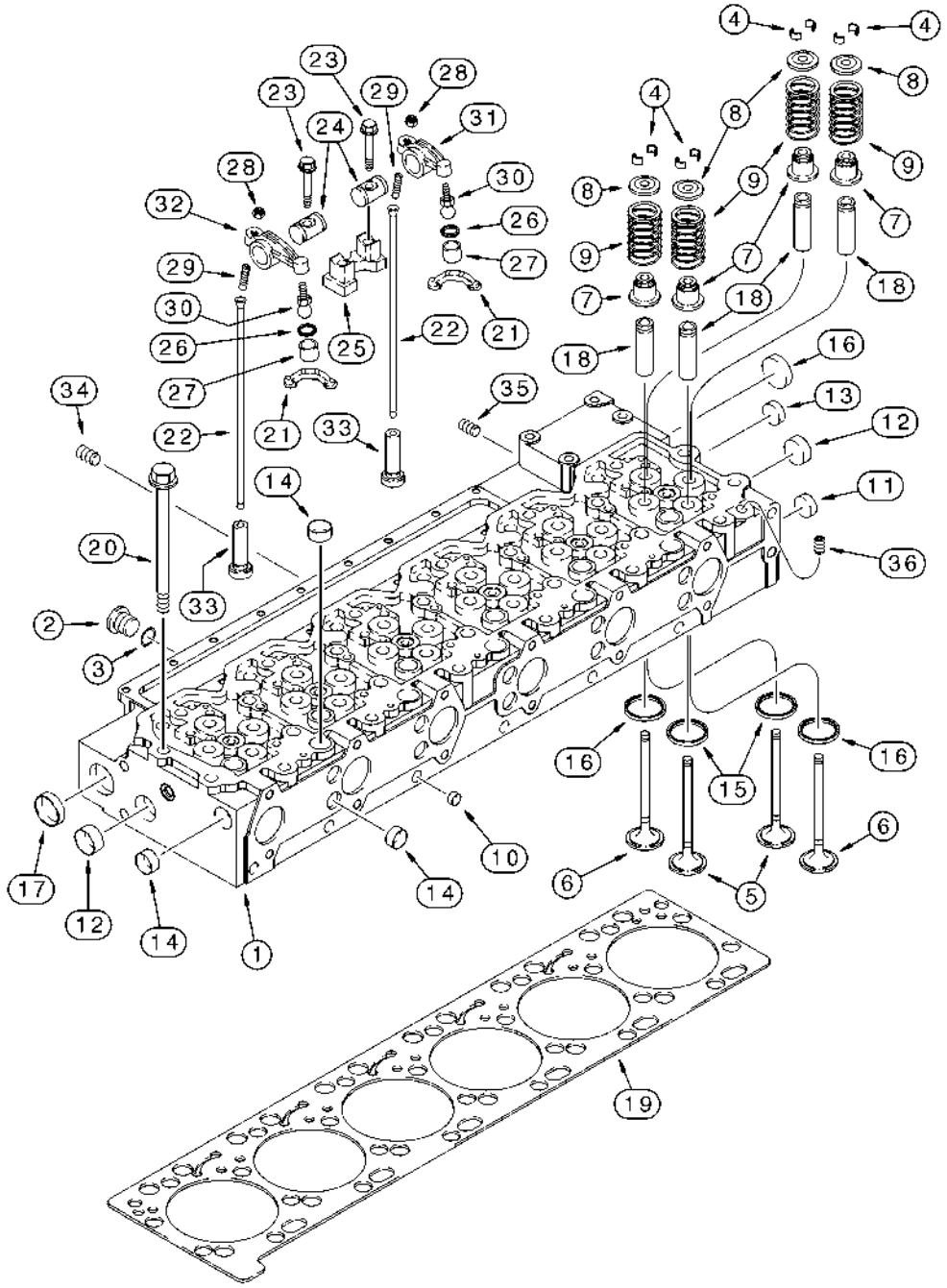

CULATA DEL CILINDRO - MECANISMO DE LA VÁLVULA, MX255 Y MX285
CABEÇA DO CILINDRO - MECANISMO DAS VÁLVULAS, MODELOS MX255 E MX285
CILINDERKOP - KLEPMECHANISME, MX255 EN MX285
TOPSTYKKE - VENTILMEKANISME, MX255 OG MX285

R	N	P.N.	MOD	Q	Description Denominacion	Descrizione Denominação	Description Beschrijving	Bezeichnung Beskrivelse	L.C.
22		J944174		12	ROD, PUSH VARILLA DE EMPUJE	ASTA, SPINTA HASTE DE IMPULSO	TIGE DE CULBUTEUR ROD, PUSH	SCHUBSTANGE SKUBBESTANG	P307
23		J943933		12	SCREW 68 mm TORNILLO	VITE PARAFUSO	VIS SCHROEF	SCHRAUBE SKRUE	040V
24		J941137		12	SHAFT EJE	ALBERO VEIO	ARBRE AS	WELLE AKSEL	016A
25		J941140		6	SUPPORT APOYADERO	SUPPORTO SUPORTE	SUPPORT SUPPORT	STUETZE SUPPORT	8790
		J942748		6	ROCKER ARM Intake, Inc. 26 - 31 BALANCIN	BILANCIERE MARTELO DE VALVULA	CULBUTEUR TUIMELAAR	KIPPHEBEL VENTILARM	055B
		J942749		6	ROCKER ARM Exhaust, Inc. 26 - 30, 32 BALANCIN	BILANCIERE MARTELO DE VALVULA	CULBUTEUR TUIMELAAR	KIPPHEBEL VENTILARM	055B
26		NSS		1	NOT SERVICED SEPARATELY Retainer NO SE REPARA SEPARA	NON FORNITO SEPARAT NOT SERVICED SEPARA	NON FOURNI SEPAREMI NIET ALLEEN VERKRIJG	KEIN ERSATZTEIL NOT SERVICED SEPARA	064N
27		NSS		1	NOT SERVICED SEPARATELY Socket NO SE REPARA SEPARA	NON FORNITO SEPARAT NOT SERVICED SEPARA	NON FOURNI SEPAREMI NIET ALLEEN VERKRIJG	KEIN ERSATZTEIL NOT SERVICED SEPARA	064N
28		A77902		1	NUT 3/8 - 24 NF TUERCA	DADO PORCA	ECROU MOER	MUTTER MØTRIK	010D
29		J991067		1	SCREW TORNILLO	VITE PARAFUSO	VIS SCHROEF	SCHRAUBE SKRUE	040V
30		NSS		1	NOT SERVICED SEPARATELY Ball NO SE REPARA SEPARA	NON FORNITO SEPARAT NOT SERVICED SEPARA	NON FOURNI SEPAREMI NIET ALLEEN VERKRIJG	KEIN ERSATZTEIL NOT SERVICED SEPARA	064N
31		NSS		1	NOT SERVICED SEPARATELY Lever, Intake NO SE REPARA SEPARA	NON FORNITO SEPARAT NOT SERVICED SEPARA	NON FOURNI SEPAREMI NIET ALLEEN VERKRIJG	KEIN ERSATZTEIL NOT SERVICED SEPARA	064N
32		NSS		1	NOT SERVICED SEPARATELY Lever, Exhaust NO SE REPARA SEPARA	NON FORNITO SEPARAT NOT SERVICED SEPARA	NON FOURNI SEPAREMI NIET ALLEEN VERKRIJG	KEIN ERSATZTEIL NOT SERVICED SEPARA	064N
33		J945866		12	TAPPET EMPUJADOR	PUNTERIA IMPULSOR	POUSSOIR LAGER, ROL	ROULEMENT A ROULEA VENTILLOEFTER	240P
34		A77505		4	PLUG 3/4 PT TAPÓN	TAPPO BUJÃO	BOUCHON PLUG	STOPFEN PROP	050T
35		A77429		7	PLUG 1/2 PT TAPÓN	TAPPO BUJÃO	BOUCHON PLUG	STOPFEN PROP	050T
36		A77428		1	PLUG 1/4 PT TAPÓN	TAPPO BUJAO	BOUCHON PLUG	STOPFEN PROP	6400

02-31		p1	11/04

THERMOSTAT - FILTER, WATER
TERMOSTATO - FILTRO, ACQUA
THERMOSTAT - FILTRE À EAU
THERMOSTAT - FILTER, WASSER

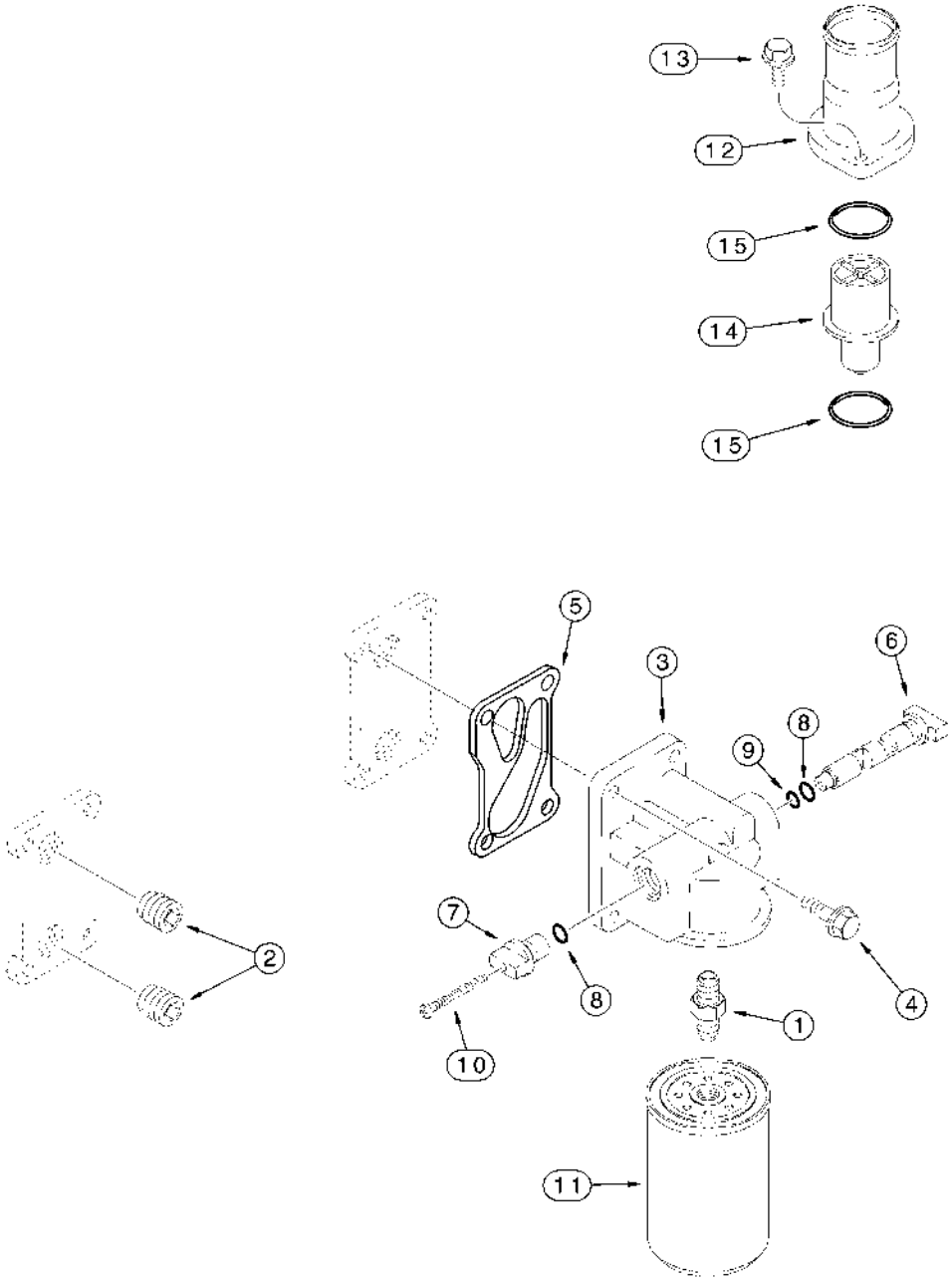

TERMOSTATO FILTRO, AGUA
FILTRO E ÁGUA DO TERMÓSTATO
THERMOSTAAT - FILTER, WATER
TERMOSTAT - FILTER, VAND

R	N	P.N.	MOD	Q	Description Denominacion	Descrizione Denominação	Description Beschrijving	Bezeichnung Beskrivelse	L.C.
1		A77623		1	ADAPTER ADAPTOR	ADATTATORE ADAPTOR	ADAPTEUR VERLOOPSTUK	ADAPTER ADAPTER	001A
2		217-441		2	PLUG 3/4 PT TAPÓN	TAPPO BUJAO	BOUCHON PLUG	STOPFEN PROP	6400
3		J943738		1	HEAD CULATA	TESTA CABECA	TÊTE HEAD	KOPF HOVED	4180
4		845-8025		4	SCREW M8 x 25; 8.8 TORNILLO	VITE PARAFUSO	VIS SCHROEF	SCHRAUBE SKRUE	7450
5		J937367		1	GASKET JUNTA HERMETICA	GUARNIZIONE JUNTA	JOINT DICHTINGSSTUK	DICHTUNG, FLACH PAKNING	123G
6		J943739		1	VALVE, SHUT-OFF VALVULA DE CIERRE	VALVOLA DI ARRESTO VALVULA DE PARADA	VALVE D'ARRET VALVE, SHUT-OFF	ABSPERRVENTIL AFSPÆRRINGSVENTIL	P337
7		J943740		1	VALVE, SHUT-OFF VALVULA DE CIERRE	VALVOLA DI ARRESTO VALVULA DE PARADA	VALVE D'ARRET VALVE, SHUT-OFF	ABSPERRVENTIL AFSPÆRRINGSVENTIL	P337
8		238-5111		2	O-RING 7/16 ID x 3/32 JUNTA HERMETICA	ANELLO TOROIDALE ANEL O	JOINT TORIQUE O-RING	O-RING O-RING	7176
9		238-5013		1	O-RING 7/16 ID x 1/16 JUNTA HERMETICA	ANELLO TOROIDALE ANEL O	JOINT TORIQUE O-RING	O-RING O-RING	7176
10		J944454		1	SCREW TORNILLO	VITE PARAFUSO	VIS SCHROEF	SCHRAUBE SKRUE	040V
11		J100304		1	ELEMENT ELEMENTO	ELEMENTO ELEMENTO	ELÉMENT ELEMENT	ELEMENT ELEMENT	Z483
12		J944429		1	CONNECTOR CONECTOR	CONNESSIONE CONECTOR	CONNECTEUR VERBINDING	STECKVERBINDUNG ELI STIK	235C
13		845-8025		2	SCREW M8 x 25; 8.8 TORNILLO	VITE PARAFUSO	VIS SCHROEF	SCHRAUBE SKRUE	7450
14		J940632		1	THERMOSTAT TERMOSTATO	TERMOSTATO TERMOSTATO	THERMOSTAT THERMOSTAAT	THERMOSTAT TERMOSTAT	096T
15		238-5227		2	O-RING 2-1/8 ID x 1/8 JUNTA HERMETICA	ANELLO TOROIDALE ANEL O	JOINT TORIQUE O-RING	O-RING O-RING	7176

CRANKCASE, BREATHER, MX210 AND MX230, BSN JAZ132841
CARTER MOTORE, SFIATO, MX210 E MX230, BSN JAZ132841
RENIFLARD DU CARTER MOTEUR, MX210 ET MX230, BSN JAZ132841
KURBELGEHÄUSE, ENTLÜFTER MX210 UND MX230, BSN JAZ132841

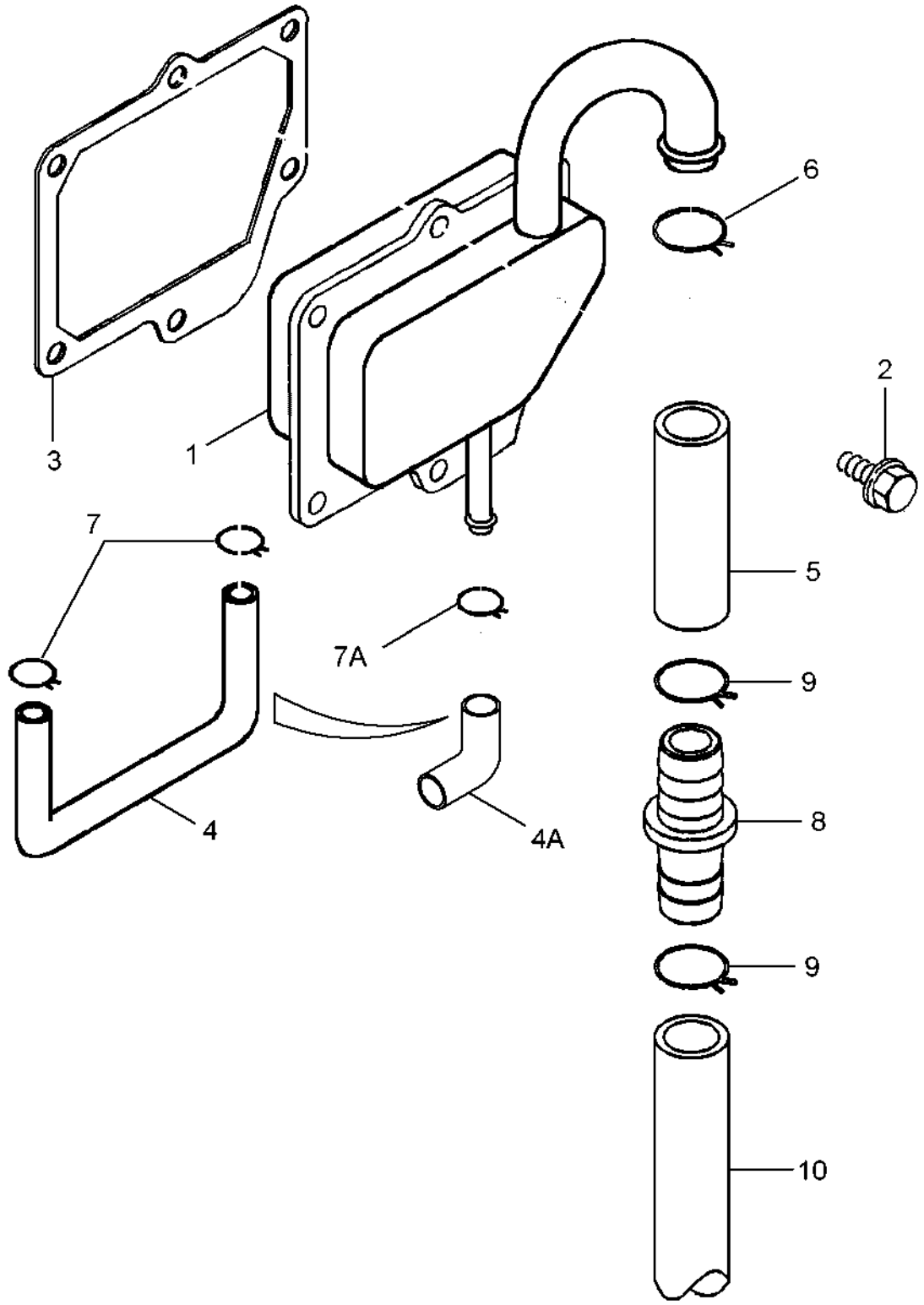

CARTER, RESPIRADERO, MX210 Y MX230, BSN JAZ132841
RESPIRADOURO DO CÁRTER DO MOTOR, MODELOS MX210 E MX230, BSN JAZ132841
CARTER, ONTLUCHTINGSDOP, MX210 EN MX230, BSN JAZ132841
KRUMTAPHUS, ÅNDERØR, MX210 OG MX230, BSN JAZ132841

R	N	P.N.	MOD	Q	Description Denominacion	Descrizione Denominação	Description Beschrijving	Bezeichnung Beskrivelse	L.C.
1	1	J937652	a	1	BREATHER RESPIRADERO	SFIATATOIO RESPIRADOR	RENIFLARD ONTLUCHTER	ENTLÜFTER UDLUFTNINGSSKRUE	145S
1		87437062	b	1	BREATHER RESPIRADERO	SFIATATOIO RESPIRADOR	RENIFLARD ONTLUCHTER	ENTLÜFTER UDLUFTNINGSSKRUE	145S
2		845-6015	a	6	SCREW M6 x 15; 8.8 TORNILLO	VITE PARAFUSO	VIS SCHROEF	SCHRAUBE SKRUE	7450
2		87409160	b	6	SCREW M6 x 16; 10.9 TORNILLO	VITE PARAFUSO	VIS SCHROEF	SCHRAUBE SKRUE	040V
3		J944683	a	1	GASKET JUNTA HERMETICA	GUARNIZIONE JUNTA	JOINT DICHTINGSSTUK	DICHTUNG, FLACH PAKNING	123G
3		87436828	b	1	GASKET JUNTA HERMETICA	GUARNIZIONE JUNTA	JOINT DICHTINGSSTUK	DICHTUNG, FLACH PAKNING	123G
4		J948068	a	1	HOSE MANGA	MANICOTTO FLESSIBILE TUBO FLEXIVEL	FLEXIBLE FLEXIBELE BUIS	SCHLAUCH SLANGE	030M
4A		87437060	b	1	HOSE MANGA	MANICOTTO FLESSIBILE TUBO FLEXIVEL	FLEXIBLE FLEXIBELE BUIS	SCHLAUCH SLANGE	030M
5		J944714		1	HOSE 320 mm (12-5/8 in) MANGA	MANICOTTO FLESSIBILE TUBO FLEXIVEL	FLEXIBLE FLEXIBELE BUIS	SCHLAUCH SLANGE	030M
6		214-1318	a	1	CLAMP 1-1/8 COLLAR	MORSETTO BRACADEIRA	COLLIER CLAMP	SCHELLE CLAMP	1640
6		214-1315	b	1	CLAMP 15/16 COLLAR	MORSETTO BRACADEIRA	COLLIER CLAMP	SCHELLE CLAMP	1640
7		214-1310	a	2	CLAMP 5/8 TORNILLO DE SUJECTIC	MORSETTO BRACADEIRA	ATTACHE ASSEMBLEE CLAMP	KLEMME CLAMP	P489
7A		214-1314	b	1	CLAMP 7/8 COLLAR	MORSETTO BRACADEIRA	COLLIER CLAMP	SCHELLE CLAMP	1640
8		1301342C1		1	FITTING CONEXION	RACCORDO CONEXAO	RACCORD FITTING	ANSCHLUSSSTÜCK FITTING	3300
9		214-1315		2	CLAMP 15/16 COLLAR	MORSETTO BRACADEIRA	COLLIER CLAMP	SCHELLE CLAMP	1640
10		414360A1		1	HOSE ASSY. 750 mm (29-1/2 in) MANGUERA (CONJUNTC	GRUPPO TUBO FLESS MANGUEIRA CONJUNTC	FLEXIBLE (ASSEMBLE) HOSE ASSY.	SCHLAUCH (KPLT.) HOSE ASSY.	P457

(1) Order 87437062. Also Order 87436828, 87437060, 214-1314, 87437056 and 86625099 for Initial Replacement
(a) BSN 46325445
(b) ASN 46325445

CRANKCASE, BREATHER, MX255 AND MX285
CARTER MOTORE, SFIATO, MX255 E MX285
RENIFLARD DU CARTER MOTEUR, MX255 ET MX285
KURBELGEHÄUSE, ENTLÜFTER MX255 UND MX285

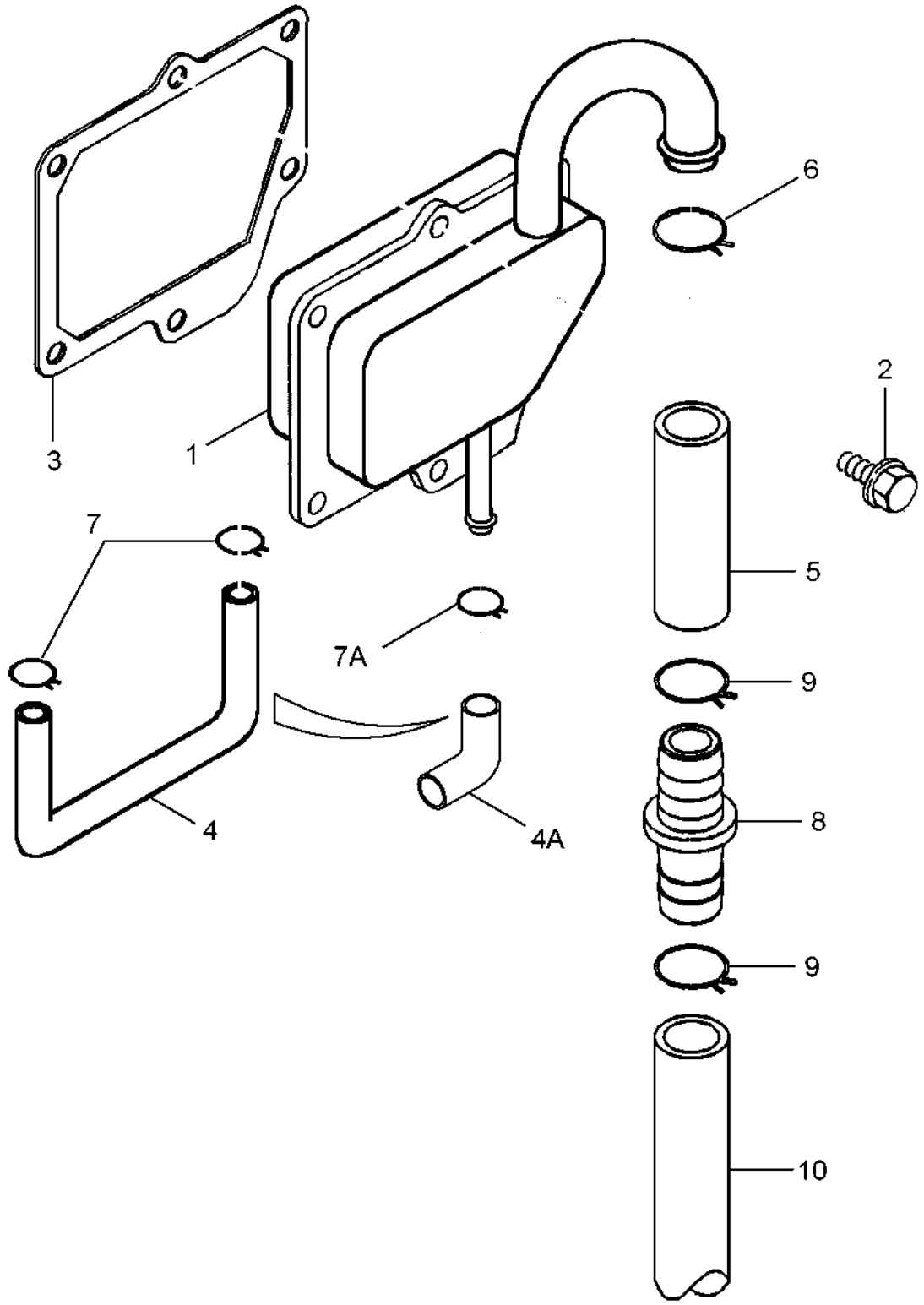

CARTER, RESPIRADERO, MX255 Y MX285
RESPIRADOURO DO CÁRTER DO MOTOR, MODELOS MX255 E MX285
CARTER, ONTLUCHTINGSDOP, MX255 EN MX285
KRUMTAPHUS, ÅNDERØR, MX255 OG MX285

R	N	P.N.	MOD	Q	Description Denominacion	Descrizione Denominação	Description Beschrijving	Bezeichnung Beskrivelse	L.C.
1	1	J937652	a	1	BREATHER RESPIRADERO	SFIATATOIO RESPIRADOR	RENIFLARD ONTLUCHTER	ENTLÜFTER UDLUFTNINGSSKRUE	145S
1		87437062	b	1	BREATHER RESPIRADERO	SFIATATOIO RESPIRADOR	RENIFLARD ONTLUCHTER	ENTLÜFTER UDLUFTNINGSSKRUE	145S
2		845-6015	a	6	SCREW M6 x 15; 8.8 TORNILLO	VITE PARAFUSO	VIS SCHROEF	SCHRAUBE SKRUE	7450
2		87409160	b	6	SCREW M6 x 16; 10.9 TORNILLO	VITE PARAFUSO	VIS SCHROEF	SCHRAUBE SKRUE	040V
3		J944683	a	1	GASKET JUNTA HERMETICA	GUARNIZIONE JUNTA	JOINT DICHTINGSSTUK	DICHTUNG, FLACH PAKNING	123G
3		87436828	b	1	GASKET JUNTA HERMETICA	GUARNIZIONE JUNTA	JOINT DICHTINGSSTUK	DICHTUNG, FLACH PAKNING	123G
4		J948068	a	1	HOSE MANGA	MANICOTTO FLESSIBILE TUBO FLEXIVEL	FLEXIBLE FLEXIBELE BUIS	SCHLAUCH SLANGE	030M
4A		87437060	b	1	HOSE MANGA	MANICOTTO FLESSIBILE TUBO FLEXIVEL	FLEXIBLE FLEXIBELE BUIS	SCHLAUCH SLANGE	030M
5		J944714		1	HOSE 320 mm (12-5/8 in) MANGA	MANICOTTO FLESSIBILE TUBO FLEXIVEL	FLEXIBLE FLEXIBELE BUIS	SCHLAUCH SLANGE	030M
6		214-1318	a	1	CLAMP 1-1/8 COLLAR	MORSETTO BRACADEIRA	COLLIER CLAMP	SCHELLE CLAMP	1640
6		214-1315	b	1	CLAMP 15/16 COLLAR	MORSETTO BRACADEIRA	COLLIER CLAMP	SCHELLE CLAMP	1640
7		214-1310	a	2	CLAMP 5/8 TORNILLO DE SUJECTIC	MORSETTO BRACADEIRA	ATTACHE ASSEMBLEE CLAMP	KLEMME CLAMP	P489
7A		214-1314	b	1	CLAMP 7/8 COLLAR	MORSETTO BRACADEIRA	COLLIER CLAMP	SCHELLE CLAMP	1640
8		1301342C1		1	FITTING CONEXION	RACCORDO CONEXAO	RACCORD FITTING	ANSCHLUSSSTÜCK FITTING	3300
9		214-1315		2	CLAMP 15/16 COLLAR	MORSETTO BRACADEIRA	COLLIER CLAMP	SCHELLE CLAMP	1640
10		414360A1		1	HOSE ASSY. 750 mm (29-1/2 in) MANGUERA (CONJUNTC	GRUPPO TUBO FLESS MANGUEIRA CONJUNTC	FLEXIBLE (ASSEMBLE) HOSE ASSY.	SCHLAUCH (KPLT.) HOSE ASSY.	P457

(1) Order 87437062. Also Order 87436828, 87437060, 214-1314, 87437056 and 86625099 for Initial Replacement
(a) BSN 46325445
(b) ASN 46325445

CAMSHAFT, MX210 AND MX230
ALBERO A CAMME, MX210 E MX230
ARBRE À CAME, MX210 ET MX230
NOCKENWELLE DER SERIEN MX210 UND MX230

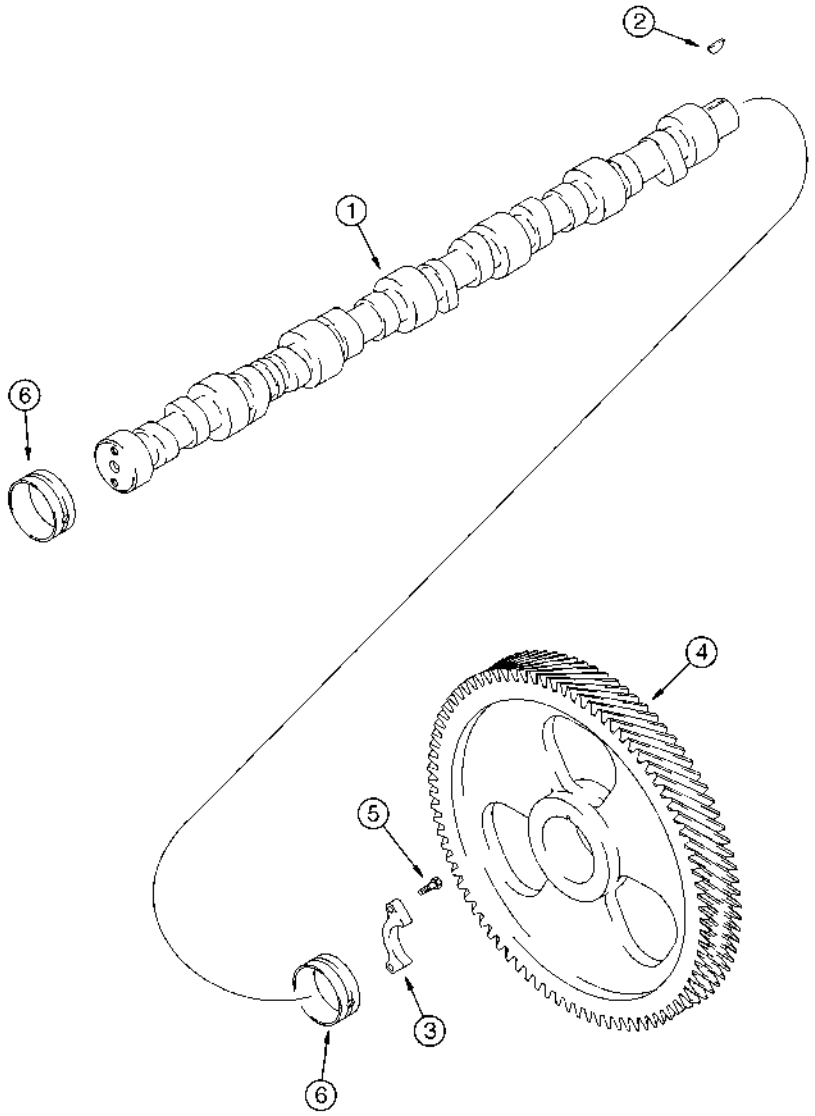

EJE DE LEVAS, MX210 Y MX230
EIXO DE CAMES, MODELOS MX210 E MX230
NOKKENAS, MX210 EN MX230
KNASTAKSEL, MX210 OG MX230

R	N	P.N.	MOD	Q	Description Denominacion	Descrizione Denominação	Description Beschrijving	Bezeichnung Beskrivelse	L.C.
1		J923478		1	CAMSHAFT ARBOL DE LEVAS	ALBERO A CAMME VEIO DE EXCENTRICOS	ARBRE A CAMES NOKKENAS	NOCKENWELLE KNASTAKSEL	017A
2		836-4065		1	KEY 4 x 6,5 mm CHAVETA	LINGUETTA CHAVETA	CLAVETTE INLEGSPIE	SCHLÜSSEL KILE	060L
3		J927155		1	SUPPORT SOPORTE	SUPPORTO SUPORTE	SUPPORT STEUN	STÜTZE BESLAG	300S
4		J918777		1	PINION PINON	PIGNONE PINHAO	PIGNON PINION	RITZEL PINION	P045
5		J900227		2	BOLT M8 x 22 TORNILLO	BULLONE PARAFUSO	BOULON BOUT	SCHAUBENBOLZEN SKRUE	140B
6		J945329		7	BUSHING CASQUILLO	BOCCOLA CASQUILHO	BAGUE LAGERBUS	BUECHSE BOESNING	095B

CAMSHAFT, MX255 AND MX285
ALBERO A CAMME, MX255 E MX285
ARBRE À CAME, MX255 ET MX285
NOCKENWELLE DER SERIEN MX255 UND MX285

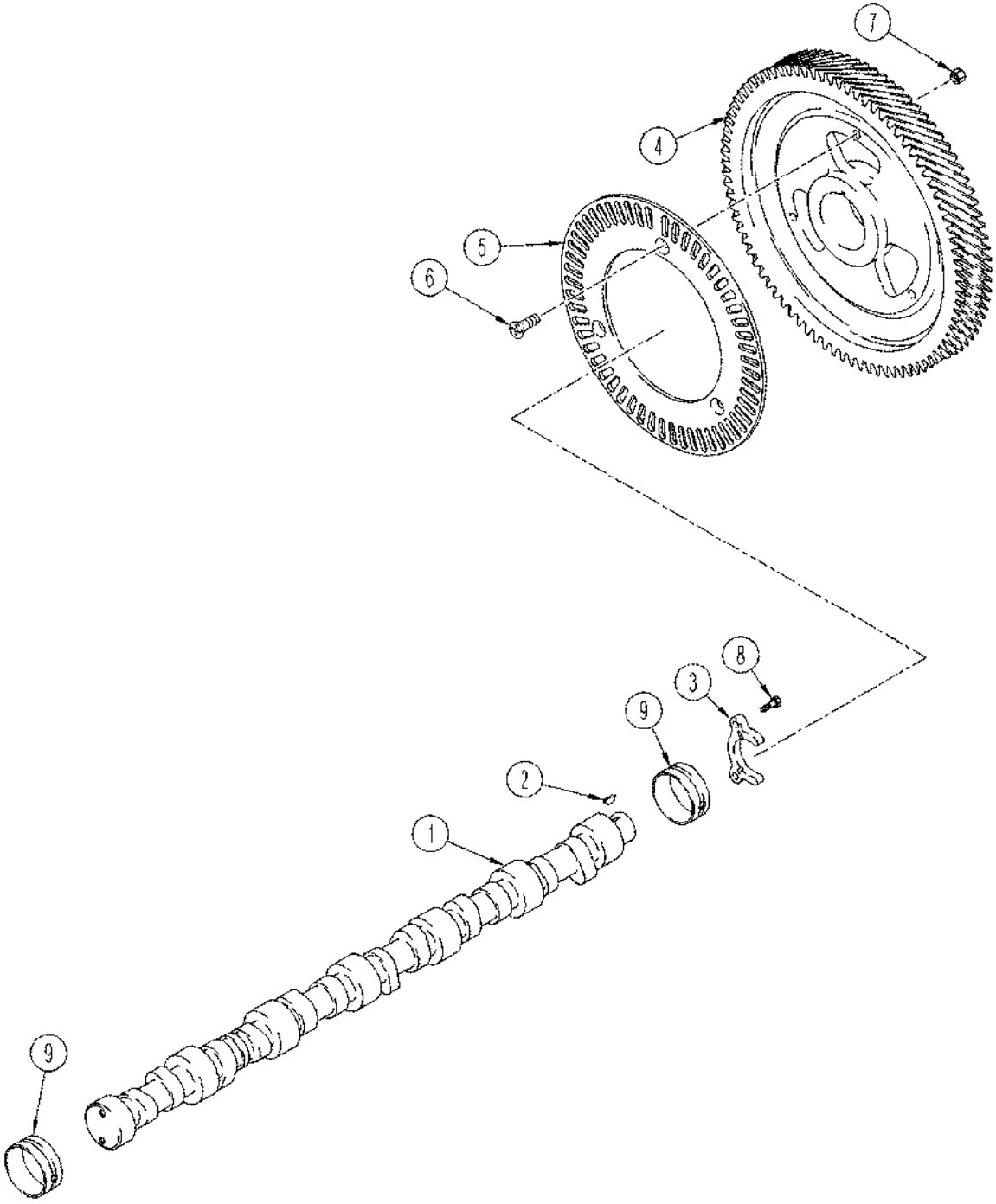

EJE DE LEVAS, MX255 Y MX285
EIXO DE CAMES, MODELOS MX255 E MX285
NOKKENAS, MX255 EN MX285
KNASTAKSEL, MX255 OG MX285

R	N	P.N.	MOD	Q	Description Denominacion	Descrizione Denominação	Description Beschrijving	Bezeichnung Beskrivelse	L.C.
1		J938163		1	CAMSHAFT ARBOL DE LEVAS	ALBERO A CAMME VEIO DE EXCENTRICOS	ARBRE A CAMES NOKKENAS	NOCKENWELLE KNASTAKSEL	017A
2		836-4065		1	KEY 4 x 6,5 mm CHAVETA	LINGUETTA CHAVETA	CLAVETTE INLEGSPIE	SCHLÜSSEL KILE	060L
3		J944001		1	SUPPORT APOYADERO	SUPPORTO SUPORTE	SUPPORT SUPPORT	STUETZE SUPPORT	8790
4		J944298		1	GEAR Inc. 4, 5, 6, 7 ENGRANAJE	INGRANAGGIO CARRETO	PIGNON TANDWIEL	ZAHNRAD TANDHJUL	050I
5		NSS		1	NOT SERVICED SEPARATELY Ring NO SE REPARA SEPARA	NON FORNITO SEPARAT NOT SERVICED SEPARA	NON FOURNI SEPAREMI NIET ALLEEN VERKRIJG	KEIN ERSATZTEIL NOT SERVICED SEPARA	064N
6		NSS		3	NOT SERVICED SEPARATELY Screw NO SE REPARA SEPARA	NON FORNITO SEPARAT NOT SERVICED SEPARA	NON FOURNI SEPAREMI NIET ALLEEN VERKRIJG	KEIN ERSATZTEIL NOT SERVICED SEPARA	064N
7		NSS		3	NOT SERVICED SEPARATELY Nut NO SE REPARA SEPARA	NON FORNITO SEPARAT NOT SERVICED SEPARA	NON FOURNI SEPAREMI NIET ALLEEN VERKRIJG	KEIN ERSATZTEIL NOT SERVICED SEPARA	064N
8		J900227		2	BOLT M8 x 22 TORNILLO	BULLONE PARAFUSO	BOULON BOUT	SCHAUBENBOLZEN SKRUE	140B
9		J945329		7	BUSHING CASQUILLO	BOCCOLA CASQUILHO	BAGUE LAGERBUS	BUECHSE BOESNING	095B

CYLINDER BLOCK, MX210 AND MX230
MONOBLOCCO, MX210 E MX230
BLOC-CYLINDRES , MX210 ET MX230
ZYLINDERBLOCK DER SERIEN MX210 UND MX230

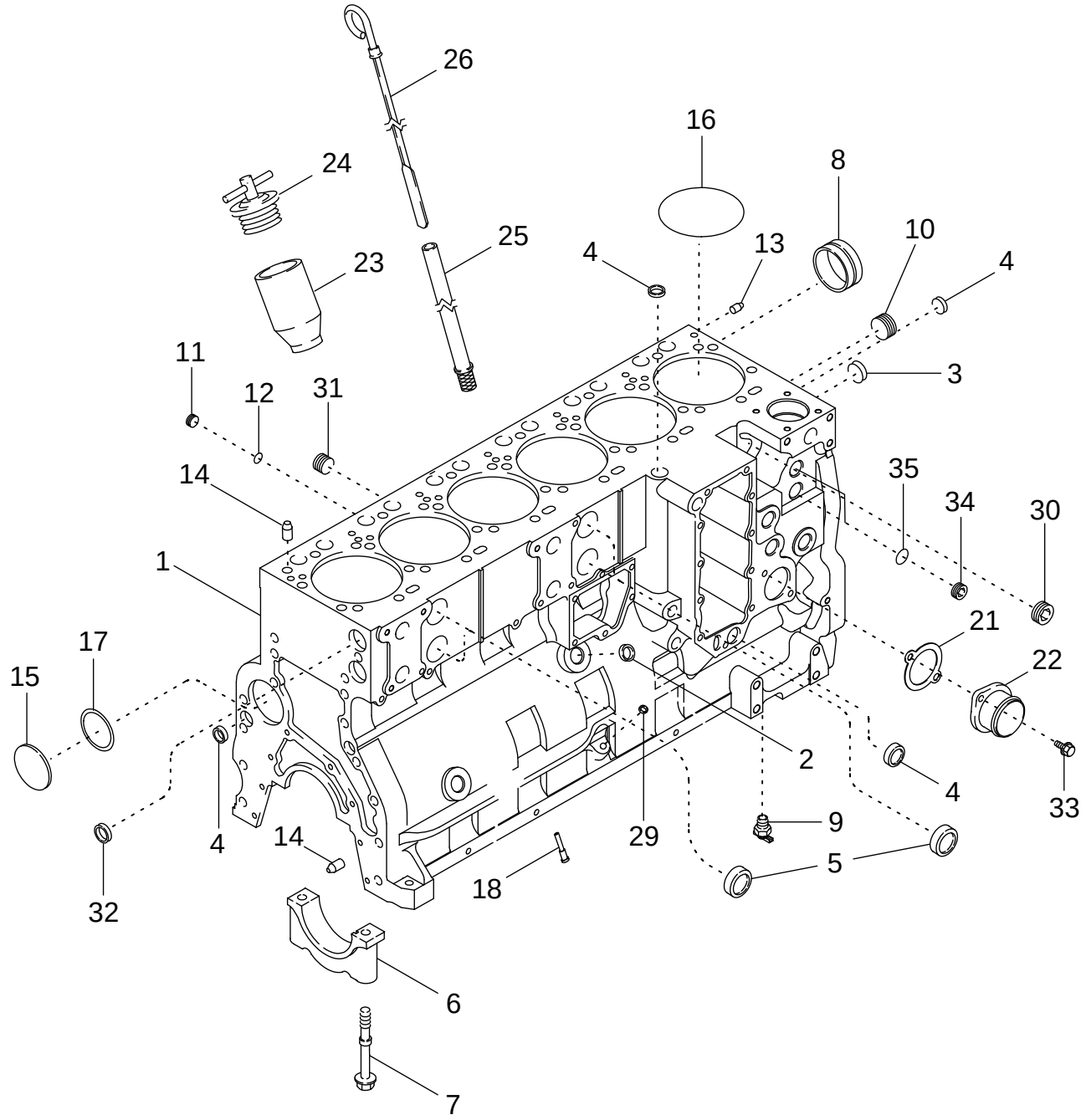

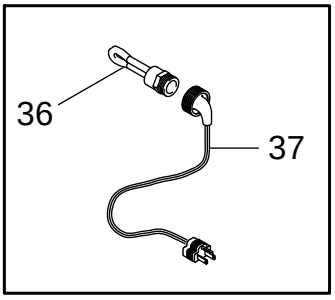

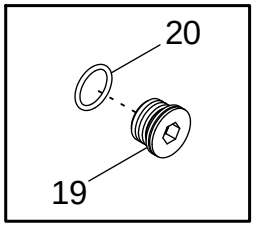

BLOQUE DE CILINDRO, MX210 Y MX230
BLOCO DO CILINDRO, MODELOS MX210 E MX230
CILINDERBLOK, MX210 EN MX230
CYLINDERBLOK, MX210 OG MX230

R	N	P.N.	MOD	Q	Description Denominacion	Descrizione Denominação	Description Beschrijving	Bezeichnung Beskrivelse	L.C.
	1, 2	**NS**		1	NOT SERVICED Engine Assy., Complete - Order 86993060				
						NON GESTITO	NON FOURNI	KEIN ERSATZTEIL	061N
					NO SE REPARA	NOT SERVICED	NIET GESTOCKEERD	NOT SERVICED	
	3, 2	**NS**		1	NOT SERVICED Engine Assy., Complete - Order 86993060				
						NON GESTITO	NON FOURNI	KEIN ERSATZTEIL	061N
					NO SE REPARA	NOT SERVICED	NIET GESTOCKEERD	NOT SERVICED	
	4	**86993060**		1	ENGINE, BASIC	MOTORE, DI BASE	MOTEUR DE BASE	RUMPFMOTOR	T005
					MOTOR BÁSICO	MOTOR BÁSICO	ENGINE, BASIC	BASIS MOTOR	
	5	**A78041**		1	CYLINDER BLOCK Short, Inc. 1 - 8				
						BASAMENTO MOTORE	BLOC MOTEUR	KURBELGEHÄUSE	020B
					BLOQUE DE CILINDROS	BLOCO DE MOTOR	MOTORBLOK	KRUMTAPHUS	
1		**J939313**		1	BASIC BLOCK Stripped, Also Order 449019A1, Inc. 3 - 8				
						BLOCCO DI BASE	BLOC-NU	BLOCK OHNE ZUBEHÖR	Z401
					BLOQUE DESNUDO	BLOCO BASICO	BASIC BLOCK	BASIC BLOCK	
2		**J920706**		1	PLUG 22 mm	TAPPO	BOUCHON	STOPFEN	050T
					TAPÓN	BUJÃO	PLUG	PROP	
3		**A77586**		2	PLUG 43 mm	TAPPO	BOUCHON	STOPFEN	050T
					TAPÓN	BUJÃO	PLUG	PROP	
4		**A77506**		4	PLUG 34 mm	TAPPO	BOUCHON	STOPFEN	050T
					TAPÓN	BUJÃO	PLUG	PROP	
5		**J905401**		4	PLUG 35 mm	TAPPO	BOUCHON	STOPFEN	050T
					TAPÓN	BUJÃO	PLUG	PROP	
6		**J936058**		7	CAP	TAPPO SERBATOIO	CHAPEAU	KAPPE	052T
					TAPON DEL DEPOSITO	TAMPAO DE RESERVAT	RESERVOIRDOP	TANKDAEKSEL	
7		**J916369**		14	SCREW M14 x 128	VITE	VIS	SCHRAUBE	040V
					TORNILLO	PARAFUSO	SCHROEF	SKRUE	
8	6	**J945329**		7	BUSHING	BOCCOLA	BAGUE	BUECHSE	095B
					CASQUILLO	CASQUILHO	LAGERBUS	BOESNING	
		449019A1		1	PACKAGE,SERVICE Inc. 9 - 20				
						CONFEZIONE, MANUT.	COLIS POUR RECHANGI	ERSATZPACKUNG	P663
					EMPAQUETADURA	JOGO DE SERVICO(PAC	PACKAGE,SERVICE	PACKAGE,SERVICE	
9		**217-103**		1	COCK, DRAIN 1/4 PT	CRICCO	ROBINET DE VIDANGE	ABLASSHAHN	Z158
					LLAVE DE PASO	DRENO	COCK, DRAIN	COCK, DRAIN	
10		**217-443**		1	PLUG 1 PT	TAPPO	BOUCHON	STOPFEN	6400
					TAPÓN	BUJAO	PLUG	PROP	
11		**J678923**		6	PLUG 10 mm, Inc. 12	TAPPO	BOUCHON	STOPFEN	050T
					TAPÓN	BUJÃO	PLUG	PROP	
12		**637-72081**		6	O-RING 8,1 ID x 1,6 mm	ANELLO TOROIDALE	JOINT TORIQUE	O-RING	7176
					JUNTA HERMETICA	ANEL O	O-RING	O-RING	
13		**J900257**		2	PIN 16 mm	PERNO	AXE	BOLZEN	080P
					PERNO	PERNO	PEN	STIFT	

(1) MX210
(2) Complete Engine, Less, Starter, Alternator, Fan, Fan Belt, Air Cleaner, Muffler and Exhaust Pipe.
(3) MX230
(4) Basic Service Engine, Less, Starter, Alternator, Fan, Fan Belt, Air Cleaner, Muffler, Exhaust Manifold, Flywheel and Housing, Oil Fill and Dipstick, Fuel Injection Pump, Injectors and Lines, Front Pulley, Belt Tensioner, Turbocharger and Aftercooler
(5) Stripped Short Block, Pistons, Connecting Rods and Bearings, Crankshaft and Bearings
(6) See Figure 02-34

CYLINDER BLOCK, MX210 AND MX230
MONOBLOCCO, MX210 E MX230
BLOC-CYLINDRES , MX210 ET MX230
ZYLINDERBLOCK DER SERIEN MX210 UND MX230

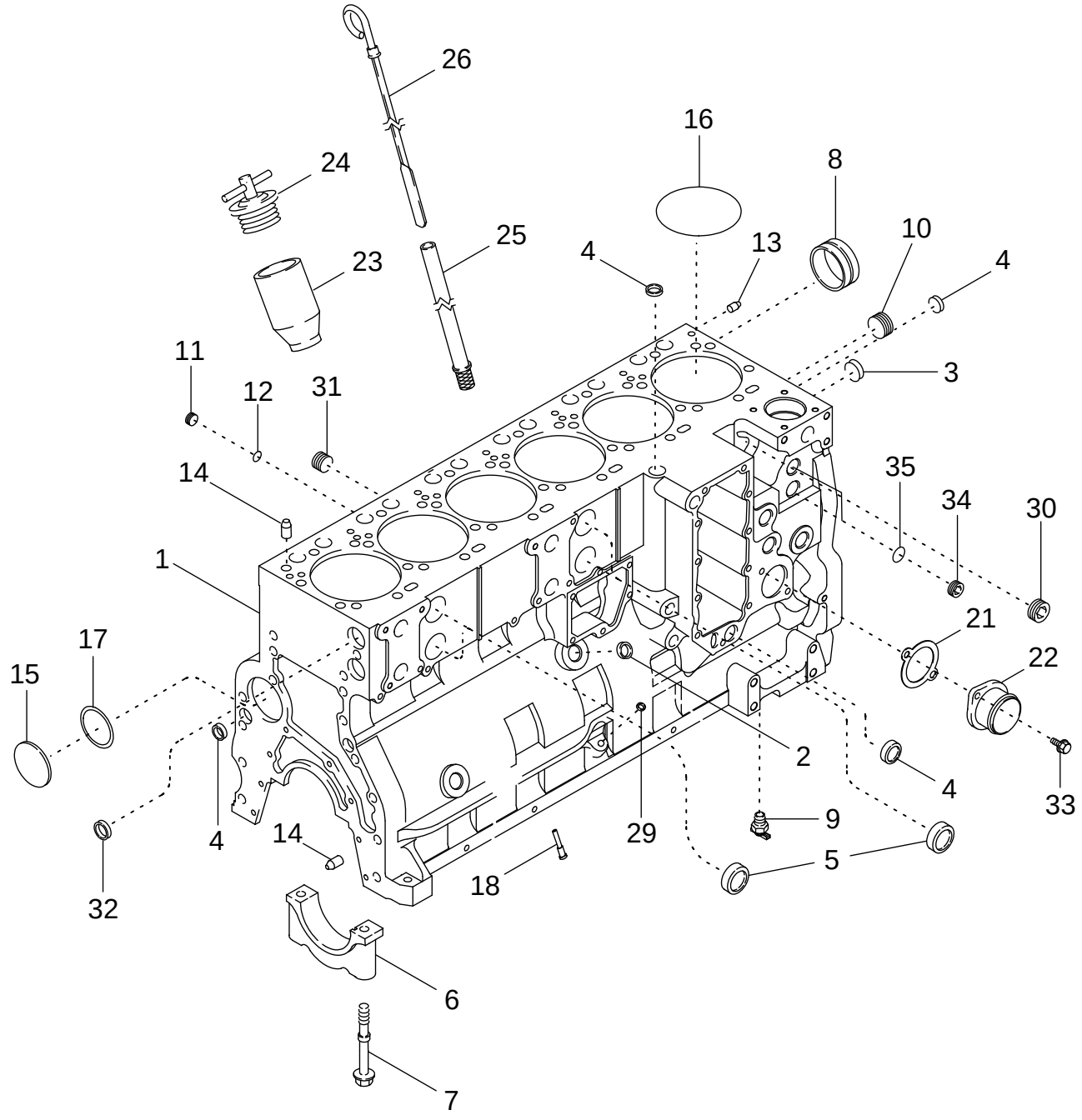

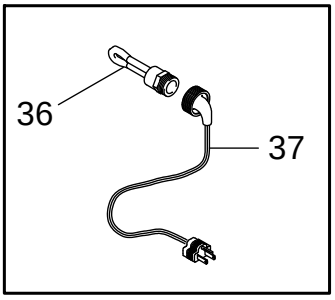

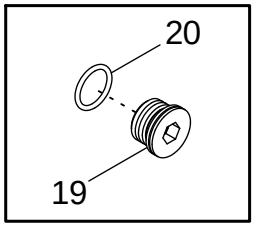

BLOQUE DE CILINDRO, MX210 Y MX230
BLOCO DO CILINDRO, MODELOS MX210 E MX230
CILINDERBLOK, MX210 EN MX230
CYLINDERBLOK, MX210 OG MX230

R	N	P.N.	MOD	Q	Description Denominacion	Descrizione Denominação	Description Beschrijving	Bezeichnung Beskrivelse	L.C.
14		J901846		4	PIN PERNO	PERNO PERNO	AXE PEN	BOLZEN STIFT	080P
15		41-3044		1	PLUG 70 mm TAPÓN	TAPPO BUJAO	BOUCHON PLUG	STOPFEN PROP	6400
16		J907177		6	O-RING JUNTA HERMETICA	ANELLO TOROIDALE O-RING	JOINT THORIQUE O-RING	DICHTRING O-RING	055A
17		J926048		1	O-RING 66 mm ID JUNTA HERMETICA	ANELLO TOROIDALE O-RING	JOINT THORIQUE O-RING	DICHTRING O-RING	055A
18		J928031		12	NOZZLE PULVERIZADOR	POLVERIZZATORE INJECTOR	GICLEUR VERSTUIVER	DÜSE DYSE	148P
19		J678921		2	PLUG 14 mm, Inc. 20 TAPÓN	TAPPO BUJÃO	BOUCHON PLUG	STOPFEN PROP	050T
20		J678912		2	O-RING JUNTA HERMETICA	ANELLO TOROIDALE O-RING	JOINT THORIQUE O-RING	DICHTRING O-RING	055A
21		J945603		1	GASKET Water Inlet JUNTA HERMETICA	GUARNIZIONE JUNTA	JOINT DICHTINGSSTUK	DICHTUNG, FLACH PAKNING	123G
22		J944720	a	1	CONNECTOR, HYD. Water Inlet RACOR	RACCORDO IDRAULICO CONECTOR	RACCORD VERBINDING	STUTZEN FORSKRUNING	020R
22	1	87415507	b	1	TUBE ASSY. (Not Shown) TUBO (CONJUNTO)	TUBO, COMPLESSIVO TUBO CONJUNTO	TUYAUTERIE TUBE ASSY.	ROHRLEITUNG TUBE ASSY.	P465
23		J905408		1	TUBE TUBO	TUBETTO TUBO	TUBE BUISJE	SCHLAUCH RØR	195T
24		J934480		1	CAP, FILLER TAPA DE DEPOSITO	TAPPO DI RIEMPIMENTO TAMPA RESERVATORIO	BOUCHON DE REMPL. CAP, FILLER	EINFÜLLDECKEL DÆKSELPÅFYLDER	P676
25		A77645		1	TUBE TUBO	TUBETTO TUBO	TUBE BUISJE	SCHLAUCH RØR	195T
26		J937417		1	DIPSTICK VARILLA DE NIVEL	ASTA DI LIVELLO VARETA DE NIVEL	JAUGE DE NIVEAU PEILSTANG	MESSSTAB MAALEPIND	091A
29		J943808		1	PLUG 13 mm TAPÓN	TAPPO BUJÃO	BOUCHON PLUG	STOPFEN PROP	050T
30		217-441		1	PLUG 3/4 PT TAPÓN	TAPPO BUJAO	BOUCHON PLUG	STOPFEN PROP	6400
31		217-438		2	PLUG 1/2 PT TAPÓN	TAPPO BUJÃO	BOUCHON PLUG	STOPFEN PROP	050T
32		J920443		2	PLUG 30 mm TAPÓN	TAPPO BUJÃO	BOUCHON PLUG	STOPFEN PROP	050T
33		845-8020		2	SCREW M8 x 20; 8.8 TORNILLO	VITE PARAFUSO	VIS SCHROEF	SCHRAUBE SKRUE	7450
34		313244A1		1	PLUG Hex Socket, 22 mm, Inc. 35 TAPÓN	TAPPO BUJÃO	BOUCHON PLUG	STOPFEN PROP	050T
35		313246A1		1	O-RING 19 ID x 2,2 mm JUNTA HERMETICA	ANELLO TOROIDALE O-RING	JOINT THORIQUE O-RING	DICHTRING O-RING	055A

(1) See Figure 02-03
(a) BSN JAZ130634
(b) ASN JAZ130634

CYLINDER BLOCK, MX210 AND MX230
MONOBLOCCO, MX210 E MX230
BLOC-CYLINDRES , MX210 ET MX230
ZYLINDERBLOCK DER SERIEN MX210 UND MX230

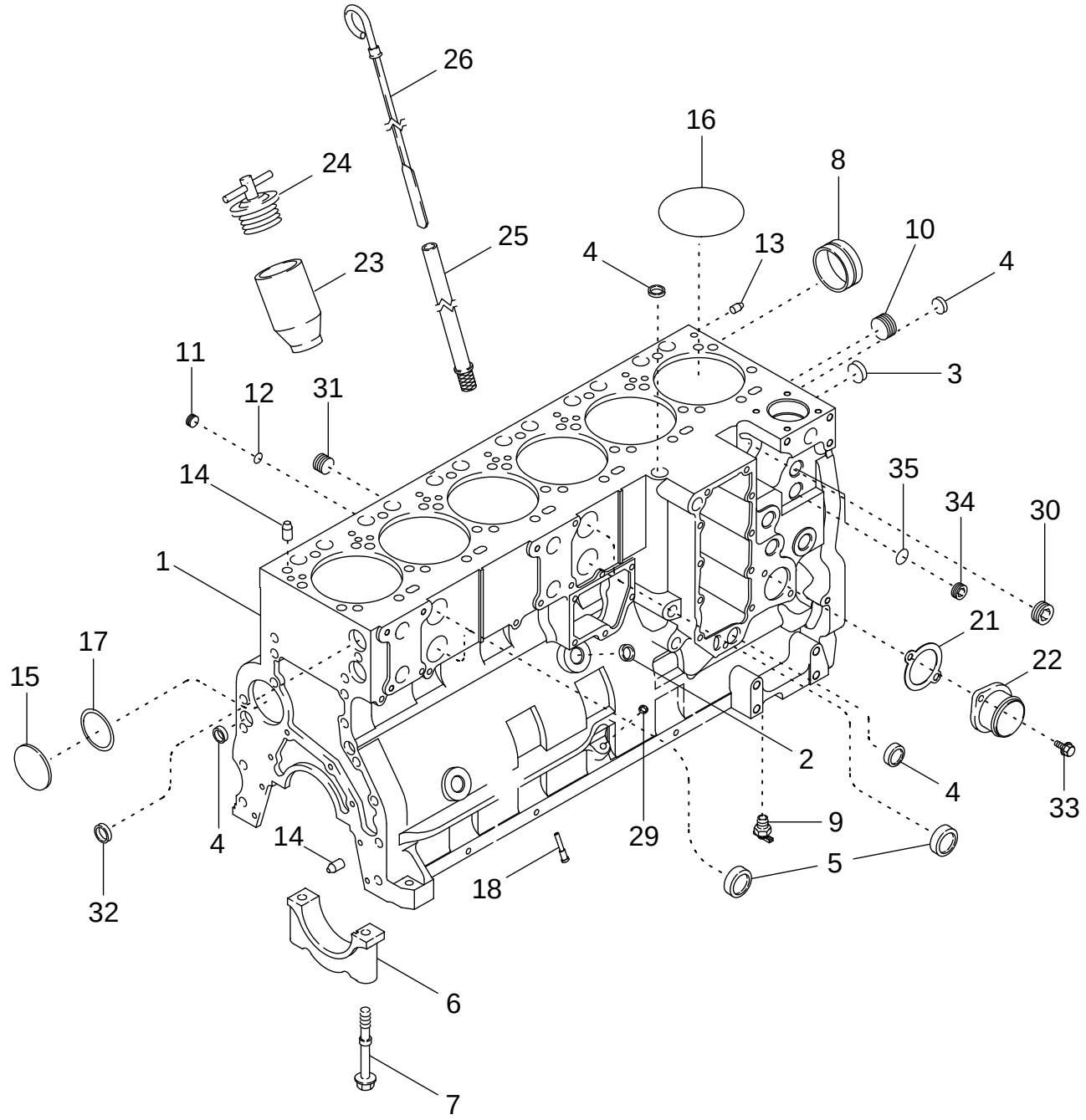

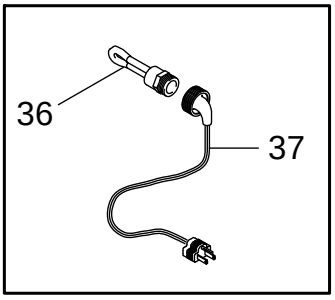

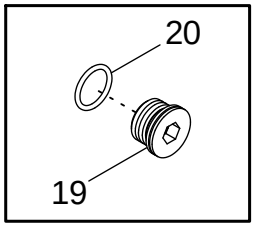

BLOQUE DE CILINDRO, MX210 Y MX230
BLOCO DO CILINDRO, MODELOS MX210 E MX230
CILINDERBLOK, MX210 EN MX230
CYLINDERBLOK, MX210 OG MX230

R	N	P.N.	MOD	Q	Description Denominacion	Descrizione Denominação	Description Beschrijving	Bezeichnung Beskrivelse	L.C.
		310493A1		1	KIT Engine Block Heater, 120 Volt, Inc. 36 - 37				
						CORREDO	KIT	SATZ	305C
					EQUIPO	KIT	KIT	UDSTYR	
36		**196466A1**		1	CABLE, ELECTRIC 1829 mm (72 in)				
						CAVO ELETTRICO	CABLE ELECTRIQUE	KABEL, ELEKTRISCH	111C
					CABLE ELECTRICO	CABO ELECTRICO	ELECTRISCHE KABEL	EL-KABEL	
37		**NSS**		1	NOT SERVICED SEPARATELY Element				
						NON FORNITO SEPARAT	NON FOURNI SEPAREMI	KEIN ERSATZTEIL	064N
					NO SE REPARA SEPARA	NOT SERVICED SEPARA	NIET ALLEEN VERKRIJG	NOT SERVICED SEPARA	
		310494A1		1	KIT Coolant Heater, 240V, Inc. 36 - 37				
						CORREDO	KIT	SATZ	305C
					EQUIPO	KIT	KIT	UDSTYR	
36		**J913112**		1	HARNESS, WIRE 305 mm (12 in)				
						INSIEME CAVI	FAISCEAU COMPLET	KABELSTRANG KPLT	070I
					GRUPO DE CABLES	CABLAGEM	KABELBOOM	KABELNET	
37		**NSS**		1	NOT SERVICED SEPARATELY Element				
						NON FORNITO SEPARAT	NON FOURNI SEPAREMI	KEIN ERSATZTEIL	064N
					NO SE REPARA SEPARA	NOT SERVICED SEPARA	NIET ALLEEN VERKRIJG	NOT SERVICED SEPARA	
	1	**A78039**		1	KIT, ENGINE OVERHAUL Not Illustrated				
						KIT REVISIONE MOTORE	KIT REVISION MOTEUR	MOTORREPARATURSAT	002K
					JUEGO DE REVISION	KIT DE REVISÃO	ONDERHOUDSKIT, MOT	REVISIONSSAET	

(1) See Figure 02-38

CYLINDER BLOCK, MX255 AND MX285
MONOBLOCCO, MX255 E MX285
BLOC-CYLINDRES , MX255 ET MX285
ZYLINDERBLOCK DER SERIEN MX255 UND MX285

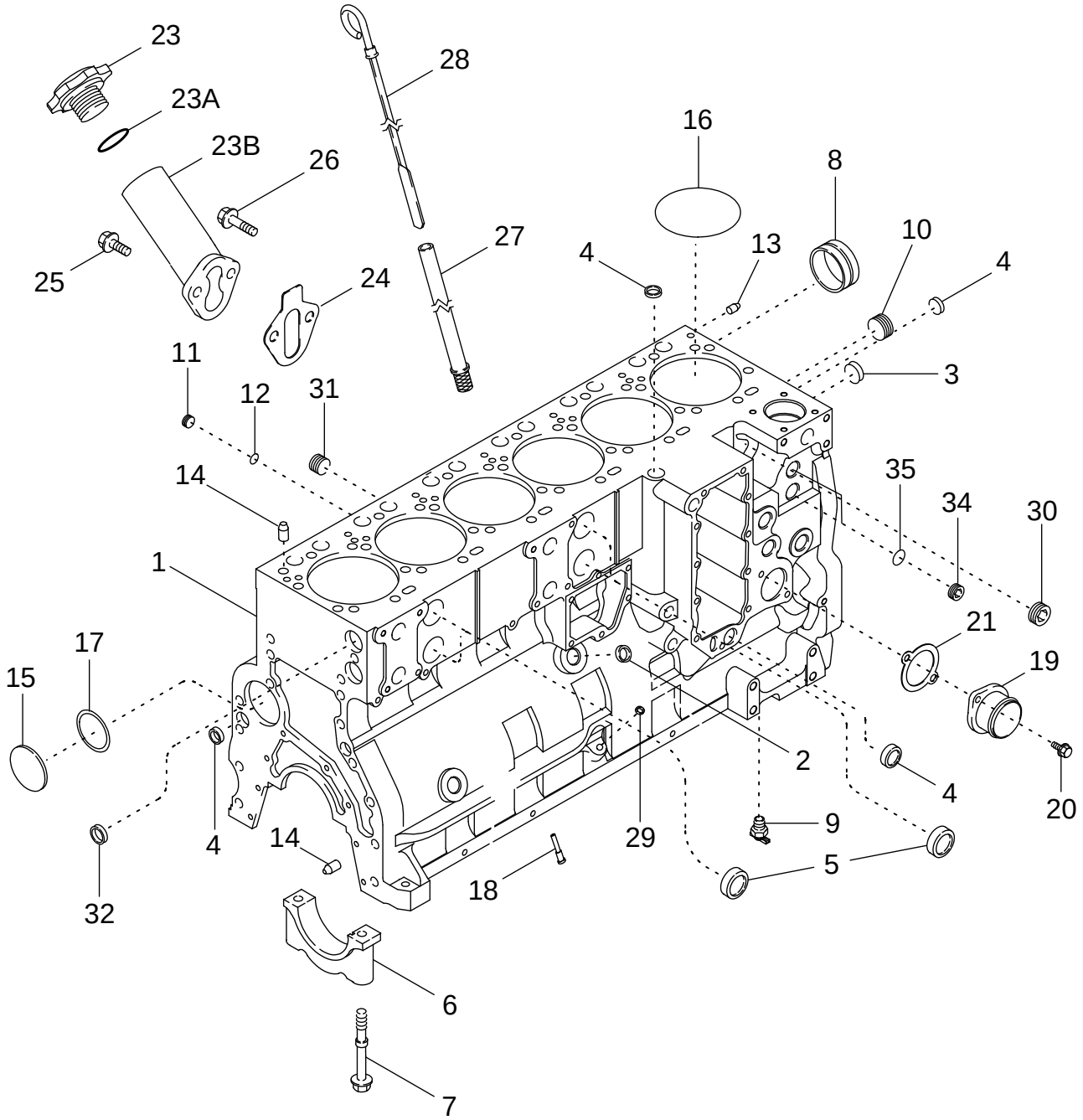

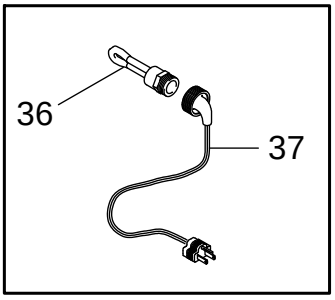

BLOQUE DE CILINDRO, MX255 Y MX285
BLOCO DO CILINDRO, MODELOS MX255 E MX285
CILINDERBLOK, MX255 EN MX285
CYLINDERBLOK - MX255 OG MX285

R	N	P.N.	MOD	Q	Description Denominacion	Descrizione Denominação	Description Beschrijving	Bezeichnung Beskrivelse	L.C.
	1, 2	**389379A2**		1	ENGINE ASSY Complete Engine, Order 87410984				
						MOTORE	MOTEUR-THERMIQUE	VERBRENNUNGSMOTOI	3020
					MOTOR	MOTOR	ENGINE ASS	ENGINE ASS	
	1, 3	**NS**		1	NOT SERVICED Complete Engine, Order 87400262				
						NON GESTITO	NON FOURNI	KEIN ERSATZTEIL	061N
					NO SE REPARA	NOT SERVICED	NIET GESTOCKEERD	NOT SERVICED	
	2	**87410984**		1	ENGINE, BASIC Basic Service Engine				
						MOTORE, DI BASE	MOTEUR DE BASE	RUMPFMOTOR	T005
					MOTOR BÁSICO	MOTOR BÁSICO	ENGINE, BASIC	BASIS MOTOR	
	4, 3	**87400262**		1	ENGINE, BASIC Basic Service Engine				
						MOTORE, DI BASE	MOTEUR DE BASE	RUMPFMOTOR	T005
					MOTOR BÁSICO	MOTOR BÁSICO	ENGINE, BASIC	BASIS MOTOR	
	5, 2	**J991309**		1	ENGINE, SHORT Inc. Of 1 - 8				
						MOTORE ALLEGGERITO	BLOC EMBIELLE	MOTOR-TEILE	139M
					MOTOR ALIGERADO	BLOCO SIMPLES	MOTORBLOK	SHORT BLOCK	
	5, 3	**J991308**		1	ENGINE, SHORT Inc. Of 1 - 8				
						MOTORE ALLEGGERITO	BLOC EMBIELLE	MOTOR-TEILE	139M
					MOTOR ALIGERADO	BLOCO SIMPLES	MOTORBLOK	SHORT BLOCK	
1		**J939299**		1	BASIC BLOCK Stripped, Also Order J800332 and J945967, Inc. 3 - 8				
						BLOCCO DI BASE	BLOC-NU	BLOCK OHNE ZUBEHÖR	Z401
					BLOQUE DESNUDO	BLOCO BASICO	BASIC BLOCK	BASIC BLOCK	
2		**J920706**		1	PLUG 22 mm	TAPPO	BOUCHON	STOPFEN	050T
					TAPÓN	BUJÃO	PLUG	PROP	
3		**A77586**		2	PLUG 43 mm	TAPPO	BOUCHON	STOPFEN	050T
					TAPÓN	BUJÃO	PLUG	PROP	
4		**A77506**		4	PLUG 34 mm	TAPPO	BOUCHON	STOPFEN	050T
					TAPÓN	BUJÃO	PLUG	PROP	
5		**J905401**		4	PLUG 35 mm	TAPPO	BOUCHON	STOPFEN	050T
					TAPÓN	BUJÃO	PLUG	PROP	
6		**J936058**		7	CAP	TAPPO SERBATOIO	CHAPEAU	KAPPE	052T
					TAPON DEL DEPOSITO	TAMPAO DE RESERVAT	RESERVOIRDOP	TANKDAEKSEL	
7		**J916369**		14	SCREW M14 x 128	VITE	VIS	SCHRAUBE	040V
					TORNILLO	PARAFUSO	SCHROEF	SKRUE	
8	6	**J945329**		7	BUSHING	BOCCOLA	BAGUE	BUECHSE	095B
					CASQUILLO	CASQUILHO	LAGERBUS	BOESNING	
		J800332		1	KIT Inc. 9 - 18	CORREDO	KIT	SATZ	305C
					EQUIPO	KIT	KIT	UDSTYR	
9		**217-103**		1	COCK, DRAIN 1/4 PT	CRICCO	ROBINET DE VIDANGE	ABLASSHAHN	Z158
					LLAVE DE PASO	DRENO	COCK, DRAIN	COCK, DRAIN	
10		**217-443**		1	PLUG 1 PT	TAPPO	BOUCHON	STOPFEN	6400
					TAPÓN	BUJAO	PLUG	PROP	

(1) Complete Engine, Less, Starter, Alternator, Fan, Fan Belt, Air Cleaner, Muffler and Exhaust Pipe.
(2) MX255
(3) MX285
(4) Basic Service Engine, Less, Starter, Alternator, Fan, Fan Belt, Air Cleaner, Muffler, Exhaust Manifold, Flywheel and Housing, Oil Fill and Dipstick, Fuel Injection Pump, Injectors and Lines, Front Pulley, Belt Tensioner, Turbocharger and Aftercooler
(5) Stripped Short Block, Pistons, Connecting Rods and Bearings, Crankshaft and Bearings
(6) See Figure 02-35

CYLINDER BLOCK, MX255 AND MX285
MONOBLOCCO, MX255 E MX285
BLOC-CYLINDRES , MX255 ET MX285
ZYLINDERBLOCK DER SERIEN MX255 UND MX285

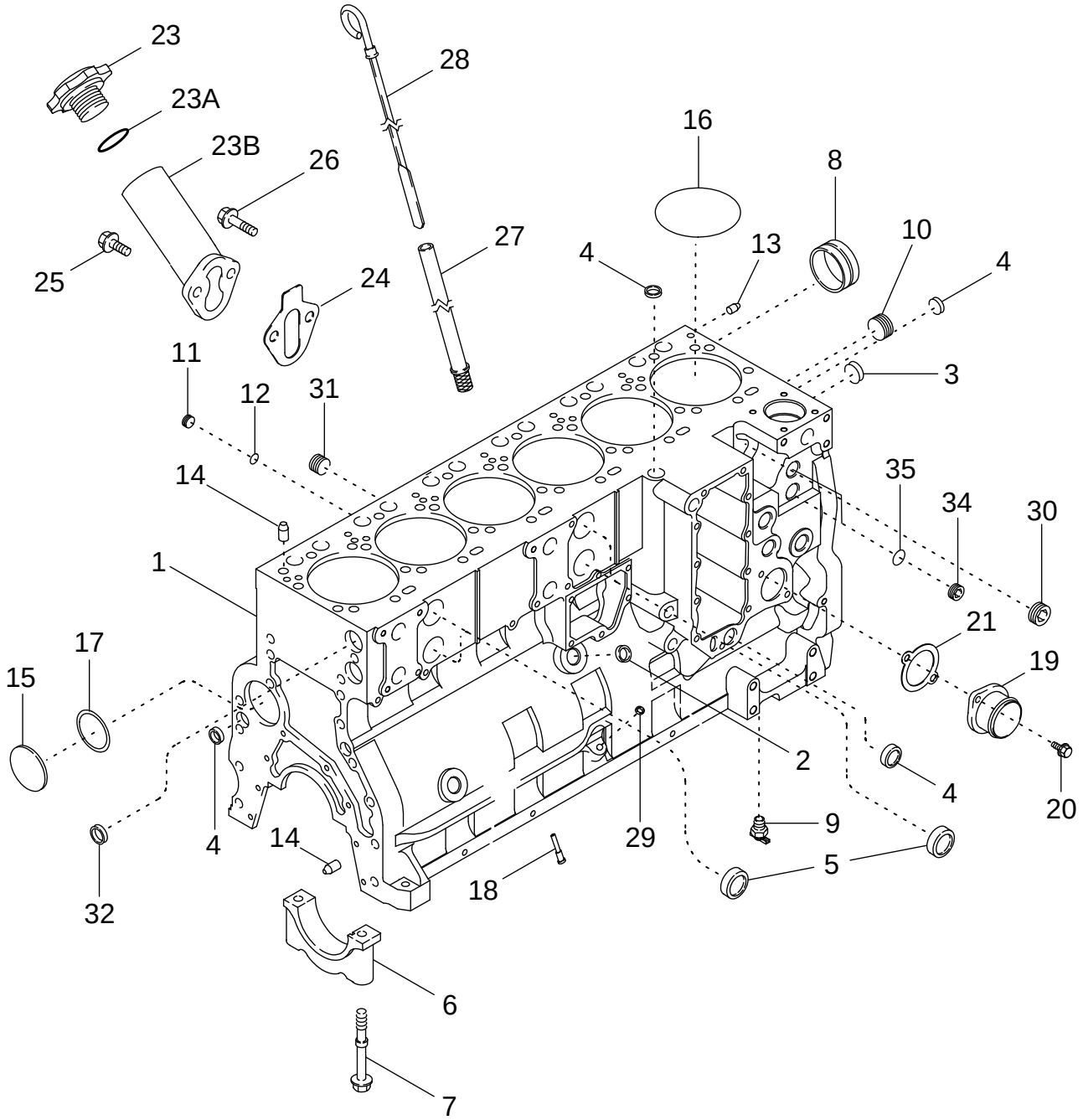

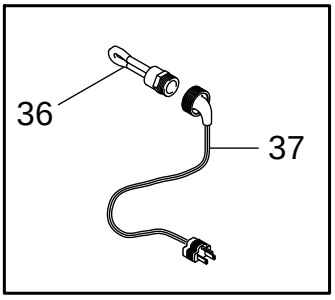

BLOQUE DE CILINDRO, MX255 Y MX285
BLOCO DO CILINDRO, MODELOS MX255 E MX285
CILINDERBLOK, MX255 EN MX285
CYLINDERBLOK - MX255 OG MX285

R	N	P.N.	MOD	Q	Description Denominacion	Descrizione Denominação	Description Beschrijving	Bezeichnung Beskrivelse	L.C.
11		J678923		6	PLUG 10 mm, Includes 637-72081				
						TAPPO	BOUCHON	STOPFEN	050T
					TAPÓN	BUJÃO	PLUG	PROP	
12		637-72081		1	O-RING 8,1 ID x 1,6 mm	ANELLO TOROIDALE	JOINT TORIQUE	O-RING	7176
					JUNTA HERMETICA	ANEL O	O-RING	O-RING	
13		J900257		2	PIN 16 mm	PERNO	AXE	BOLZEN	080P
					PERNO	PERNO	PEN	STIFT	
14		J901846		4	PIN	PERNO	AXE	BOLZEN	080P
					PERNO	PERNO	PEN	STIFT	
15		41-3044		1	PLUG 70 mm	TAPPO	BOUCHON	STOPFEN	6400
					TAPÓN	BUJAO	PLUG	PROP	
16		J907177		6	O-RING	ANELLO TOROIDALE	JOINT THORIQUE	DICHTRING	055A
					JUNTA HERMETICA	O-RING	O-RING	O-RING	
17		J926048		1	O-RING 66 mm ID	ANELLO TOROIDALE	JOINT THORIQUE	DICHTRING	055A
					JUNTA HERMETICA	O-RING	O-RING	O-RING	
18		J928031		12	NOZZLE	POLVERIZZATORE	GICLEUR	DÜSE	148P
					PULVERIZADOR	INJECTOR	VERSTUIVER	DYSE	
19		J944720	a	1	CONNECTOR, HYD.	RACCORDO IDRAULICO	RACCORD	STUTZEN	020R
					RACOR	CONECTOR	VERBINDING	FORSKRUNING	
19	1	87415507	b	1	TUBE ASSY. (Not Shown)	TUBO, COMPLESSIVO	TUYAUTERIE	ROHRLEITUNG	P465
					TUBO (CONJUNTO)	TUBO CONJUNTO	TUBE ASSY.	TUBE ASSY.	
20		845-8020		2	SCREW M8 x 20; 8.8	VITE	VIS	SCHRAUBE	7450
					TORNILLO	PARAFUSO	SCHROEF	SKRUE	
21		J945603		1	GASKET	GUARNIZIONE	JOINT	DICHTUNG, FLACH	123G
					JUNTA HERMETICA	JUNTA	DICHTINGSSTUK	PAKNING	
23		J937759		1	CAP, FILLER	TAPPO DI RIEMPIMENTO	BOUCHON DE REMPL.	EINFÜLLDECKEL	P676
					TAPA DE DEPOSITO	TAMPA RESERVATORIO	CAP, FILLER	DÆKSELPÅFYLDER	
23A		238-5123		1	O-RING 1-3/16 ID x 3/32	ANELLO TOROIDALE	JOINT TORIQUE	O-RING	7176
					JUNTA HERMETICA	ANEL O	O-RING	O-RING	
23B		J944510		1	PIPE ASSY.	TUBO, GROUPO	TUBE (ASSEMBLE)	ROHR (KPLT.)	P563
					TUBO (CONJUNTO)	TUBO CONJUNTO	PIPE ASSY.	PIPE ASSY.	
24		J939258		1	GASKET	GUARNIZIONE	JOINT	DICHTUNG, FLACH	123G
					JUNTA HERMETICA	JUNTA	DICHTINGSSTUK	PAKNING	
25		845-8020		1	SCREW M8 x 20; 8.8	VITE	VIS	SCHRAUBE	7450
					TORNILLO	PARAFUSO	SCHROEF	SKRUE	
26		845-8070		1	SCREW M8 x 70	VITE	VIS	SCHRAUBE	7450
					TORNILLO	PARAFUSO	SCHROEF	SKRUE	
27		A77645		1	TUBE	TUBETTO	TUBE	SCHLAUCH	195T
					TUBO	TUBO	BUISJE	RØR	
28		J934481		1	DIPSTICK	ASTA DI LIVELLO	JAUGE DE NIVEAU	MESSSTAB	091A
					VARILLA DE NIVEL	VARETA DE NIVEL	PEILSTANG	MAALEPIND	
29		J943808		1	PLUG 13 mm	TAPPO	BOUCHON	STOPFEN	050T
					TAPÓN	BUJÃO	PLUG	PROP	
30		217-441		2	PLUG 3/4 PT	TAPPO	BOUCHON	STOPFEN	6400
					TAPÓN	BUJAO	PLUG	PROP	

(1) See Figure 02-03
(a) BSN JAZ130634
(b) ASN JAZ130634

CYLINDER BLOCK, MX255 AND MX285
MONOBLOCCO, MX255 E MX285
BLOC-CYLINDRES , MX255 ET MX285
ZYLINDERBLOCK DER SERIEN MX255 UND MX285

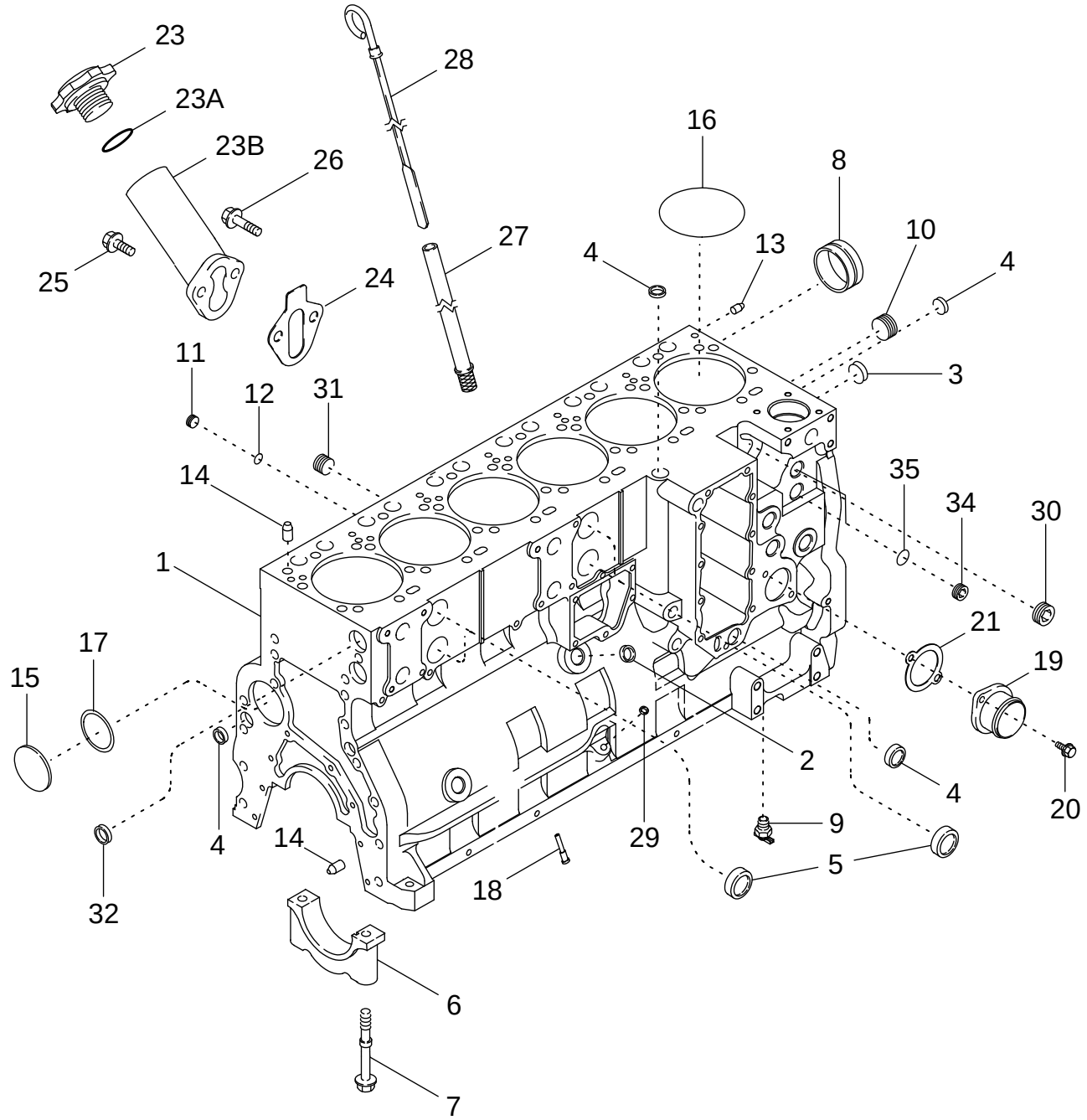

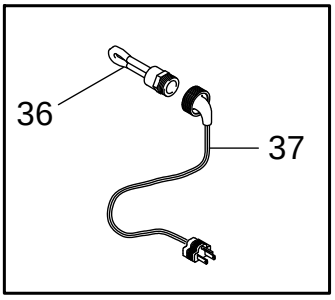

BLOQUE DE CILINDRO, MX255 Y MX285
BLOCO DO CILINDRO, MODELOS MX255 E MX285
CILINDERBLOK, MX255 EN MX285
CYLINDERBLOK - MX255 OG MX285

R	N	P.N.	MOD	Q	Description Denominacion	Descrizione Denominação	Description Beschrijving	Bezeichnung Beskrivelse	L.C.
31		217-438		2	PLUG 1/2 PT TAPÓN	TAPPO BUJÃO	BOUCHON PLUG	STOPFEN PROP	050T
32		J920443		2	PLUG 30 mm TAPÓN	TAPPO BUJÃO	BOUCHON PLUG	STOPFEN PROP	050T
34		313244A1		2	PLUG 22 mm, Inc. 35 TAPÓN	TAPPO BUJÃO	BOUCHON PLUG	STOPFEN PROP	050T
35		313246A1		1	O-RING 19 ID x 2,2 mm JUNTA HERMETICA	ANELLO TOROIDALE O-RING	JOINT THORIQUE O-RING	DICHTRING O-RING	055A
		310493A1		1	KIT Engine Block Heater, 120V/1000W, Inc. 36, 37 EQUIPO	CORREDO KIT	KIT KIT	SATZ UDSTYR	305C
36		NSS		1	NOT SERVICED SEPARATELY Element NO SE REPARA SEPARA	NON FORNITO SEPARAT NOT SERVICED SEPARA	NON FOURNI SEPAREMI NIET ALLEEN VERKRIJG	KEIN ERSATZTEIL NOT SERVICED SEPARA	064N
37		196466A1		1	CABLE, ELECTRIC 1829 mm (72 in) CABLE ELECTRICO	CAVO ELETTRICO CABO ELECTRICO	CABLE ELECTRIQUE ELECTRISCHE KABEL	KABEL, ELEKTRISCH EL-KABEL	111C
		310494A1		1	KIT Engine Block Heater, 240V/1000W, Inc. 36, 37 EQUIPO	CORREDO KIT	KIT KIT	SATZ UDSTYR	305C
36		NSS		1	NOT SERVICED SEPARATELY Element NO SE REPARA SEPARA	NON FORNITO SEPARAT NOT SERVICED SEPARA	NON FOURNI SEPAREMI NIET ALLEEN VERKRIJG	KEIN ERSATZTEIL NOT SERVICED SEPARA	064N
37		J913112		1	HARNESS, WIRE 305 mm (12 in) GRUPO DE CABLES	INSIEME CAVI CABLAGEM	FAISCEAU COMPLET KABELBOOM	KABELSTRANG KPLT KABELNET	070I
	1	A78020		1	PACKAGE, REPAIR Engine Block, Not Illustrated JEUGO REPARACION	CONFEZIONE, FRENI JOGO DE REPARO	COLIS DE REPARATION PACKAGE, REPAIR	REPARATURPACKUNG PACKAGE, REPAIR	P704

(1) See Figure 02-39

KIT ENGINE OVERHAUL, MX210 AND MX230
KIT PER LA REVISIONE DEL MOTORE, MX210 E MX230
KIT DE RÉVISION DU MOTEUR, MX210 ET MX230
MOTOR-ÜBERHOLKIT DER SERIEN MX210 UND MX230

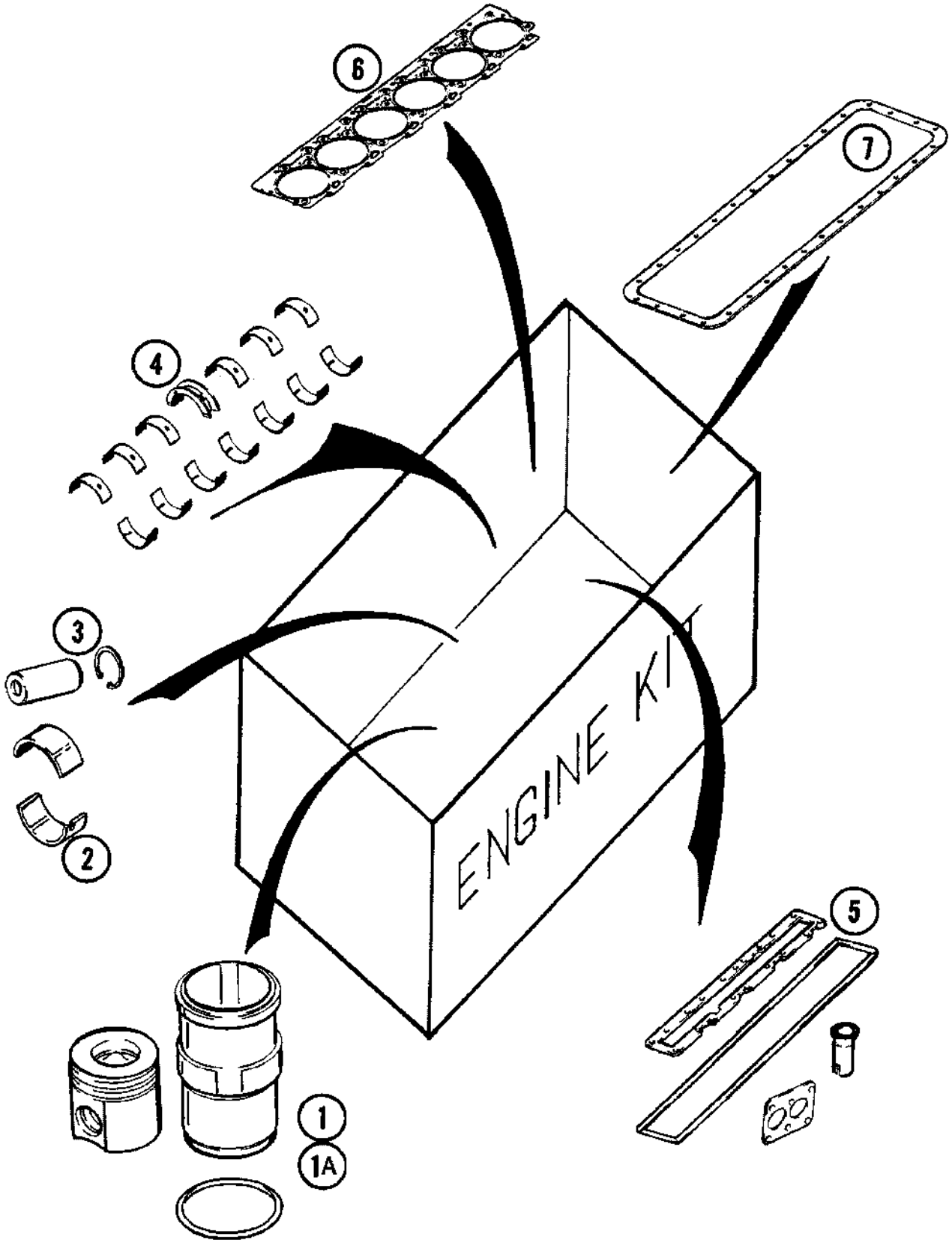

JUEGO DE REVISIÓN DEL MOTOR, MX210 Y MX230
KIT PARA RECONDICIONAMENTO DO MOTOR, MODELOS MX210 E MX230
MOTORREVISIE-SET, MX210 EN MX230
SÆT MOTOREFTERSYN, MX210 OG MX230

R	N	P.N.	MOD	Q	Description Denominacion	Descrizione Denominação	Description Beschrijving	Bezeichnung Beskrivelse	L.C.
		A78039		1	KIT, ENGINE OVERHAUL Inc. 1 - 8				
						KIT REVISIONE MOTORE	KIT REVISION MOTEUR	MOTORREPARATURSAT	002K
					JUEGO DE REVISION	KIT DE REVISÃO	ONDERHOUDSKIT, MOT	REVISIONSSAET	
1	1	**A78038**		6	KIT, PISTON & RINGS	SERIE STANTUFFI E ANE	KIT DE PISTONS & SEGM	KOLBEN & RINGE, SATZ	313S
					SERIE PISTONES	CONJUNTO DE PISTOES	KIT, ZUIGER EN RINGEN	STEMPEL-&-RINGSAET	
2	1	**A77563**		6	BEARING LINER Connecting Rod, Standard				
						CUSCINETTO DI BANCO	COUSSINET	LAGERMETALL	P114
					COJINETE	ROLAMENTO	BEARING LINER	LEJESØLE	
3	1	**J934046**		6	PIN Piston	PERNO	AXE	BOLZEN	080P
					PERNO	PERNO	PEN	STIFT	
4	2	**J945930**		6	BEARING, CRANKSHAFT Standard				
						CUSCIN.(ALB A GOM)	COUSSINET VILEBREQU	KURBELWELLENLAGER	P110
					COJINETTE CIGUENAL	CASQUILHO VIRABREQU	BEARING, CRANKSHAFT	KEGLEAKSEL	
5	2	**J945929**		1	BEARING, CRANKSHAFT Thrust, Standard				
						CUSCIN.(ALB A GOM)	COUSSINET VILEBREQU	KURBELWELLENLAGER	P110
					COJINETTE CIGUENAL	CASQUILHO VIRABREQU	BEARING, CRANKSHAFT	KEGLEAKSEL	
6	3	**A78018**		1	KIT, GASKET Valve Grind	CONFEZIONE, GUARNIZ	JEU JOINTS ETANCHEIT	DICHTUNGSSATZ	3740
					EMPAQUE DE JUNTAS	JOGO DE JUNTAS	KIT, GASKET	PAKNINGS PAKKE	
7		**J943366**		1	GASKET, CYLINDER HEAD				
						GUARNIZIONE TESTA CI	JOINT DE CULASSE	ZYLINDERKOPFDICHTUI	129G
					JUNTA DE CULATA	JUNTA DA CABECA	CYLINDERKOPDICHTING	TOPPAKNING	
8	4	**A77999**		1	KIT, GASKET Oil Pan	CONFEZIONE, GUARNIZ	JEU JOINTS ETANCHEIT	DICHTUNGSSATZ	3740
					EMPAQUE DE JUNTAS	JOGO DE JUNTAS	KIT, GASKET	PAKNINGS PAKKE	

(1) See Figure 02-42
(2) See Figure 02-40
(3) See Figure 02-44
(4) See Figure 02-25

KIT ENGINE OVERHAUL, MX255 AND MX285
KIT PER LA REVISIONE DEL MOTORE, MX255 E MX285
KIT DE RÉVISION DU MOTEUR, MX255 ET MX285
MOTOR-ÜBERHOLKIT DER SERIEN MX255 UND MX285

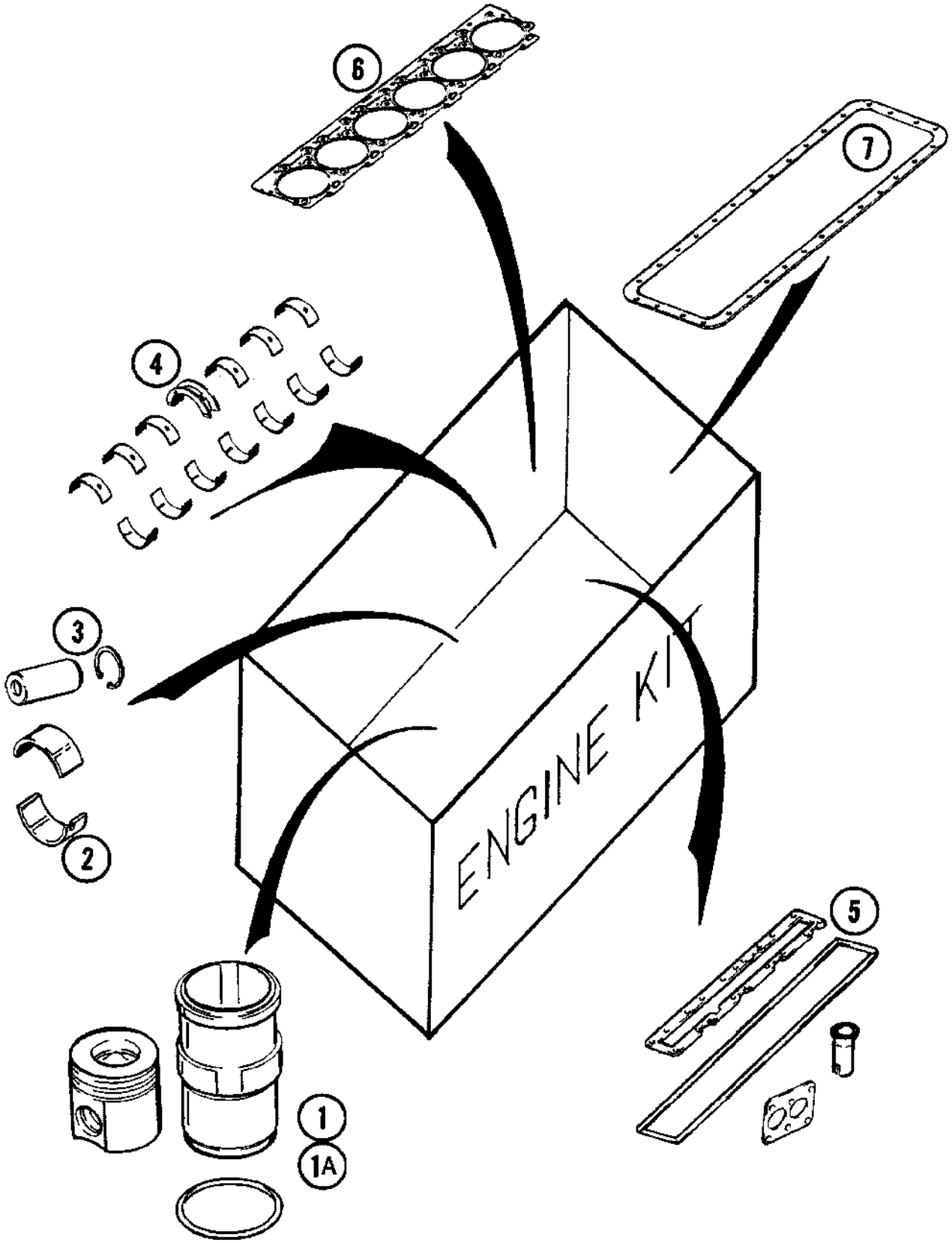

JUEGO DE REVISIÓN DEL MOTOR, MX255 Y MX285
KIT PARA RECONDICIONAMENTO DO MOTOR, MODELOS MX255 E MX285
MOTORREVISIE-SET, MX255 EN MX285
SÆT MOTOREFTERSYN, MX255 OG MX285

R	N	P.N.	MOD	Q	Description Denominacion	Descrizione Denominação	Description Beschrijving	Bezeichnung Beskrivelse	L.C.
	1	**A78019**		1	KIT Engine Overhaul Kit, Inc. 1 - 8				
						CORREDO	KIT	SATZ	305C
					EQUIPO	KIT	KIT	UDSTYR	
	2	**A78020**		1	PACKAGE, REPAIR Engine Overhaul Kit, Inc. 1 - 8				
						CONFEZIONE, FRENI	COLIS DE REPARATION	REPARATURPACKUNG	P704
					JEUGO REPARACION	JOGO DE REPARO	PACKAGE, REPAIR	PACKAGE, REPAIR	
1	3, 1	**A77901**		6	KIT, PISTON & RINGS Piston & Rings				
						SERIE STANTUFFI E ANE	KIT DE PISTONS & SEGM	KOLBEN & RINGE, SATZ	313S
					SERIE PISTONES	CONJUNTO DE PISTOES	KIT, ZUIGER EN RINGEN	STEMPEL-&-RINGSAET	
1	3, 2	**A77970**		6	KIT, PISTON & RINGS	SERIE STANTUFFI E ANE	KIT DE PISTONS & SEGM	KOLBEN & RINGE, SATZ	313S
					SERIE PISTONES	CONJUNTO DE PISTOES	KIT, ZUIGER EN RINGEN	STEMPEL-&-RINGSAET	
2	3	**A77563**		6	BEARING LINER Connecting Rod, Standard				
						CUSCINETTO DI BANCO	COUSSINET	LAGERMETALL	P114
					COJINETE	ROLAMENTO	BEARING LINER	LEJESØLE	
3	3	**J934046**		6	PIN Piston	PERNO	AXE	BOLZEN	080P
					PERNO	PERNO	PEN	STIFT	
4	4	**J945930**		6	BEARING, CRANKSHAFT Standard				
						CUSCIN.(ALB A GOM)	COUSSINET VILEBREQU	KURBELWELLENLAGER	P110
					COJINETTE CIGUENAL	CASQUILHO VIRABREQU	BEARING, CRANKSHAFT	KEGLEAKSEL	
5	4	**J945929**		1	BEARING, CRANKSHAFT Thrust, Standard				
						CUSCIN.(ALB A GOM)	COUSSINET VILEBREQU	KURBELWELLENLAGER	P110
					COJINETTE CIGUENAL	CASQUILHO VIRABREQU	BEARING, CRANKSHAFT	KEGLEAKSEL	
6	5	**A78018**		1	KIT, GASKET Valve Grind	CONFEZIONE, GUARNIZ	JEU JOINTS ETANCHEIT	DICHTUNGSSATZ	3740
					EMPAQUE DE JUNTAS	JOGO DE JUNTAS	KIT, GASKET	PAKNINGS PAKKE	
7	6	**J943366**		1	GASKET, CYLINDER HEAD				
						GUARNIZIONE TESTA CI	JOINT DE CULASSE	ZYLINDERKOPFDICHTUI	129G
					JUNTA DE CULATA	JUNTA DA CABECA	CYLINDERKOPDICHTING	TOPPAKNING	
8	7	**A77999**		1	KIT, GASKET Oil Pan	CONFEZIONE, GUARNIZ	JEU JOINTS ETANCHEIT	DICHTUNGSSATZ	3740
					EMPAQUE DE JUNTAS	JOGO DE JUNTAS	KIT, GASKET	PAKNINGS PAKKE	

(1) MX255
(2) MX285
(3) See Figure 02-43
(4) See Figure 02-40
(5) See Figure 02-45
(6) See Figure 02-28
(7) See Figure 02-25

02-40		p1	11/04

CRANKSHAFT
ALBERO A GOMITI
VILBREQUIN
KURBELWELLE

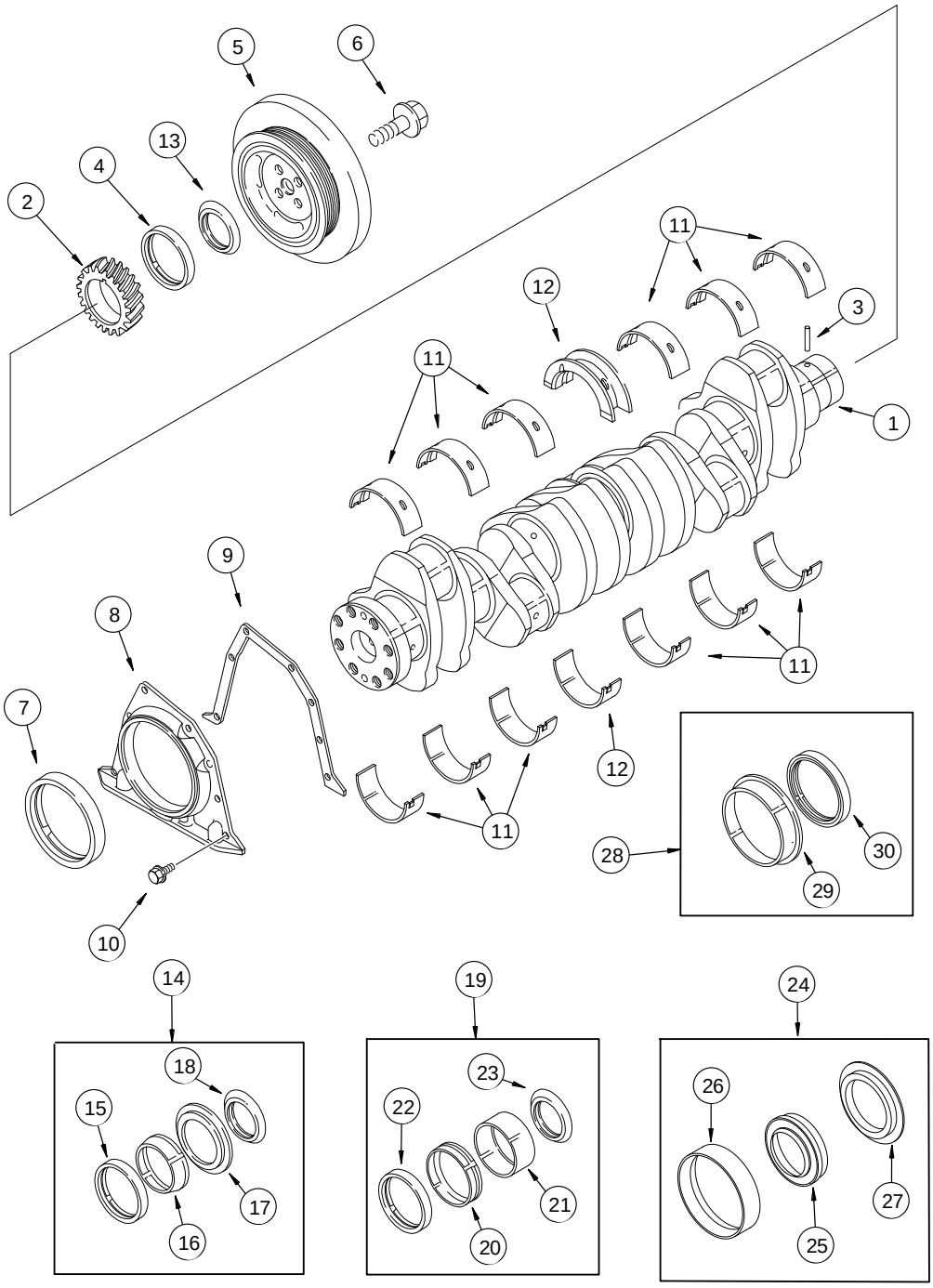

CIGÜEÑAL
EIXO DA CAMBOTA
KRUKAS
KRUMTAPAKSEL

R	N	P.N.	MOD	Q	Description Denominacion	Descrizione Denominação	Description Beschrijving	Bezeichnung Beskrivelse	L.C.
1		J918986		1	CRANKSHAFT New, Inc. 2, 3				
						ALBERO MOTORE	VILEBREQUIN	KURBELWELLE	018A
					CIGÜEÑAL	CAMBOTA	KRUKAS	KRUMTAPAKSEL	
2		J918776		1	GEAR	INGRANAGGIO	PIGNON	ZAHNRAD	050I
					ENGRANAJE	CARRETO	TANDWIEL	TANDHJUL	
3		J904483		1	PIN	PERNO	AXE	BOLZEN	080P
					PERNO	PERNO	PEN	STIFT	
4		NSS		1	NOT SERVICED SEPARATELY Seal, Order A77790				
						NON FORNITO SEPARAT	NON FOURNI SEPAREMI	KEIN ERSATZTEIL	064N
					NO SE REPARA SEPARA	NOT SERVICED SEPARA	NIET ALLEEN VERKRIJG	NOT SERVICED SEPARA	
5		J925570		1	DAMPER	SMORZATORE	AMORTISSEUR VIBRATI	DÄMPFER	164S
					ANTIVIBRADOR	ANTIVIBRADOR	TRILLINGSDEMPER	SVINGNINGSDAEMPER	
6		J906733		4	BOLT M14 x 35	BULLONE	BOULON	SCHAUBENBOLZEN	140B
					TORNILLO	PARAFUSO	BOUT	SKRUE	
7		NSS		1	NOT SERVICED SEPARATELY Seal, Order J934486				
						NON FORNITO SEPARAT	NON FOURNI SEPAREMI	KEIN ERSATZTEIL	064N
					NO SE REPARA SEPARA	NOT SERVICED SEPARA	NIET ALLEEN VERKRIJG	NOT SERVICED SEPARA	
8		J933384		1	COVER, REAR	COPERCHIO, POST	COUVERCLE ARRIERE	ABDECKUNG, HINTEN	P775
					TRASERA TAPA	TAMPA TRASEIRA	COVER, REAR	BAGDÆKSEL	
9		J914301		1	GASKET	GUARNIZIONE	JOINT	DICHTUNG, FLACH	123G
					JUNTA HERMETICA	JUNTA	DICHTINGSSTUK	PAKNING	
10		845-6015		8	SCREW M6 x 15; 8.8	VITE	VIS	SCHRAUBE	7450
					TORNILLO	PARAFUSO	SCHROEF	SKRUE	
11		J945930		6	BEARING, CRANKSHAFT Standard				
						CUSCIN.(ALB A GOM)	COUSSINET VILEBREQU	KURBELWELLENLAGER	P110
					COJINETTE CIGUENAL	CASQUILHO VIRABREQU	BEARING, CRANKSHAFT	KEGLEAKSEL	
11		J945931		6	BEARING, CRANKSHAFT Undersize 0,25 mm				
						CUSCIN.(ALB A GOM)	COUSSINET VILEBREQU	KURBELWELLENLAGER	P110
					COJINETTE CIGUENAL	CASQUILHO VIRABREQU	BEARING, CRANKSHAFT	KEGLEAKSEL	
11		J945932		6	BEARING, CRANKSHAFT Undersize 0,50 mm				
						CUSCIN.(ALB A GOM)	COUSSINET VILEBREQU	KURBELWELLENLAGER	P110
					COJINETTE CIGUENAL	CASQUILHO VIRABREQU	BEARING, CRANKSHAFT	KEGLEAKSEL	
11		J945933		6	BEARING, CRANKSHAFT Undersize 0,75 mm				
						CUSCIN.(ALB A GOM)	COUSSINET VILEBREQU	KURBELWELLENLAGER	P110
					COJINETTE CIGUENAL	CASQUILHO VIRABREQU	BEARING, CRANKSHAFT	KEGLEAKSEL	
11		J945934		6	BEARING, CRANKSHAFT Undersize 1,00 mm				
						CUSCIN.(ALB A GOM)	COUSSINET VILEBREQU	KURBELWELLENLAGER	P110
					COJINETTE CIGUENAL	CASQUILHO VIRABREQU	BEARING, CRANKSHAFT	KEGLEAKSEL	
12		J945929		1	BEARING, CRANKSHAFT Standard				
						CUSCIN.(ALB A GOM)	COUSSINET VILEBREQU	KURBELWELLENLAGER	P110
					COJINETTE CIGUENAL	CASQUILHO VIRABREQU	BEARING, CRANKSHAFT	KEGLEAKSEL	
12		J945922		1	BEARING, CRANKSHAFT Undersize 0,25 mm				
						CUSCIN.(ALB A GOM)	COUSSINET VILEBREQU	KURBELWELLENLAGER	P110
					COJINETTE CIGUENAL	CASQUILHO VIRABREQU	BEARING, CRANKSHAFT	KEGLEAKSEL	
12		J945923		1	BEARING, CRANKSHAFT Undersize 0,50 mm				
						CUSCIN.(ALB A GOM)	COUSSINET VILEBREQU	KURBELWELLENLAGER	P110
					COJINETTE CIGUENAL	CASQUILHO VIRABREQU	BEARING, CRANKSHAFT	KEGLEAKSEL	

CRANKSHAFT
ALBERO A GOMITI
VILBREQUIN
KURBELWELLE

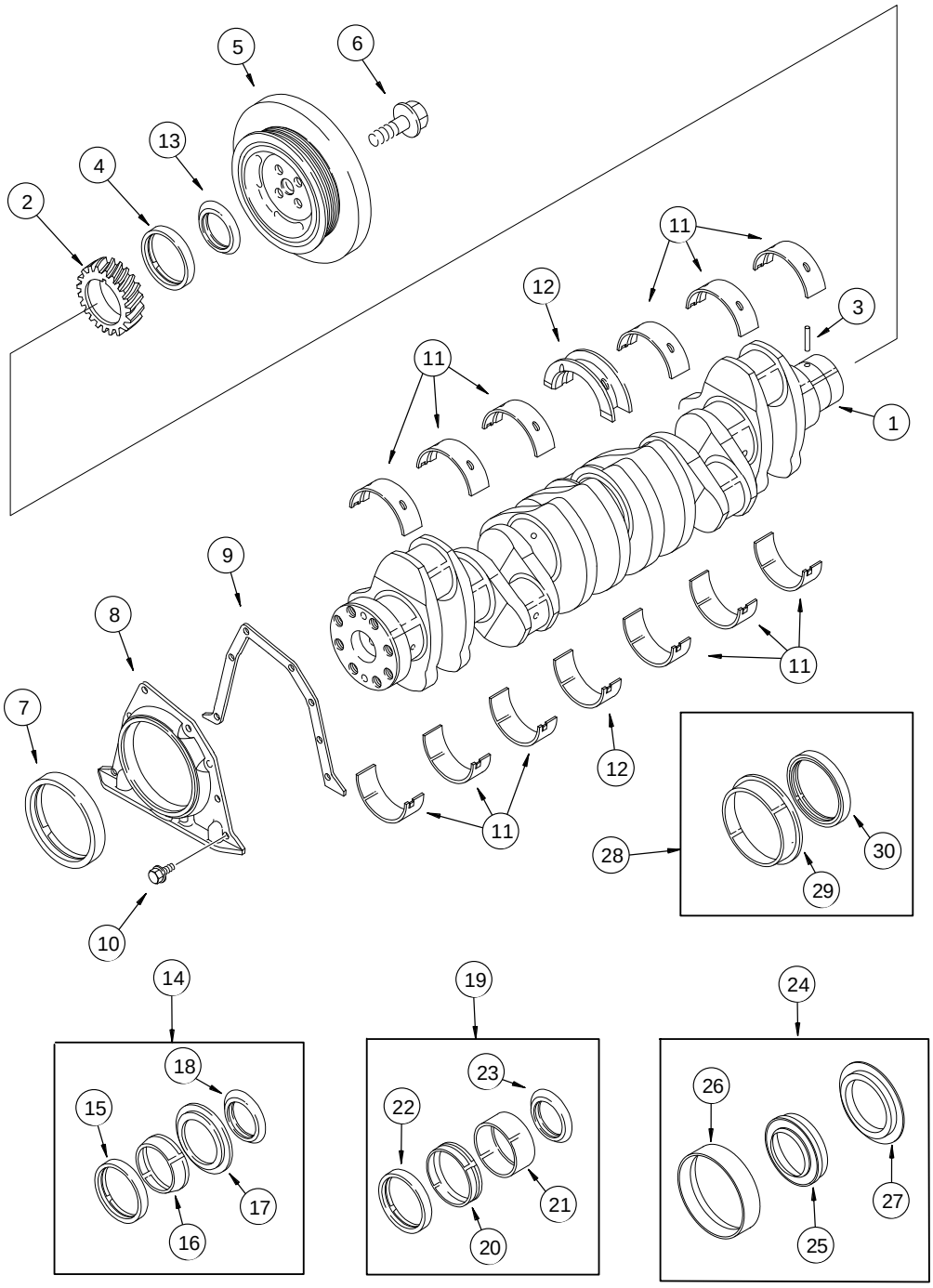

CIGÜEÑAL
EIXO DA CAMBOTA
KRUKAS
KRUMTAPAKSEL

R	N	P.N.	MOD	Q	Description Denominacion	Descrizione Denominação	Description Beschrijving	Bezeichnung Beskrivelse	L.C.
12		J945924		1	BEARING, CRANKSHAFT Undersize 0,75 mm				
						CUSCIN.(ALB A GOM)	COUSSINET VILEBREQU	KURBELWELLENLAGER	P110
					COJINETTE CIGUENAL	CASQUILHO VIRABREQU	BEARING, CRANKSHAFT	KEGLEAKSEL	
12		J945925		1	BEARING, CRANKSHAFT Undersize 1,00 mm				
						CUSCIN.(ALB A GOM)	COUSSINET VILEBREQU	KURBELWELLENLAGER	P110
					COJINETTE CIGUENAL	CASQUILHO VIRABREQU	BEARING, CRANKSHAFT	KEGLEAKSEL	
12		J945926		1	BEARING, CRANKSHAFT Standard, Oversize 0,25 mm				
						CUSCIN.(ALB A GOM)	COUSSINET VILEBREQU	KURBELWELLENLAGER	P110
					COJINETTE CIGUENAL	CASQUILHO VIRABREQU	BEARING, CRANKSHAFT	KEGLEAKSEL	
12		J945927		1	BEARING, CRANKSHAFT Standard, Oversize 0,50 mm				
						CUSCIN.(ALB A GOM)	COUSSINET VILEBREQU	KURBELWELLENLAGER	P110
					COJINETTE CIGUENAL	CASQUILHO VIRABREQU	BEARING, CRANKSHAFT	KEGLEAKSEL	
12		J945928		1	BEARING, CRANKSHAFT Undersize 0,50 mm, Oversize 0,50 mm				
						CUSCIN.(ALB A GOM)	COUSSINET VILEBREQU	KURBELWELLENLAGER	P110
					COJINETTE CIGUENAL	CASQUILHO VIRABREQU	BEARING, CRANKSHAFT	KEGLEAKSEL	
13		J918113		1	SHIELD Order A77790	PROTEZIONE	PROTECTION	SCHUTZ	224P
					PROTECCION	PROTECCAO	AFSCHERMING	BESKYTTELSESKÆRM	
14		A77790		1	KIT, SEALS Crankshaft, Front, Inc. 15 - 18				
						SERIE GUARNIZIONI	POCHETTE DE JOINTS	DICHTUNGSSATZ	630S
					SERIE DE JUNTAS	CONJUNTO DE JUNTAS	DICHTINGSKIT	PAKNINGSSAET	
15		NSS		1	NOT SERVICED SEPARATELY Seal				
						NON FORNITO SEPARAT	NON FOURNI SEPAREMI	KEIN ERSATZTEIL	064N
					NO SE REPARA SEPARA	NOT SERVICED SEPARA	NIET ALLEEN VERKRIJG	NOT SERVICED SEPARA	
16		NSS		1	NOT SERVICED SEPARATELY Tool				
						NON FORNITO SEPARAT	NON FOURNI SEPAREMI	KEIN ERSATZTEIL	064N
					NO SE REPARA SEPARA	NOT SERVICED SEPARA	NIET ALLEEN VERKRIJG	NOT SERVICED SEPARA	
17		NSS		1	NOT SERVICED SEPARATELY Tool				
						NON FORNITO SEPARAT	NON FOURNI SEPAREMI	KEIN ERSATZTEIL	064N
					NO SE REPARA SEPARA	NOT SERVICED SEPARA	NIET ALLEEN VERKRIJG	NOT SERVICED SEPARA	
18		J918113		1	SHIELD	PROTEZIONE	PROTECTION	SCHUTZ	224P
					PROTECCION	PROTECCAO	AFSCHERMING	BESKYTTELSESKÆRM	
19		A77808		1	KIT, SERVICE Crankshaft, Front, Inc. 20 - 23				
						KIT ASSISTENZIALE	KIT ASSISTANCE	WARTUNGSSATZ	021K
					KIT, SERVICE	KIT, SERVICE	KIT, SERVICE	SERVICE SAET	
20		NSS		1	NOT SERVICED SEPARATELY Sleeve				
						NON FORNITO SEPARAT	NON FOURNI SEPAREMI	KEIN ERSATZTEIL	064N
					NO SE REPARA SEPARA	NOT SERVICED SEPARA	NIET ALLEEN VERKRIJG	NOT SERVICED SEPARA	
21		NSS		1	NOT SERVICED SEPARATELY Tool				
						NON FORNITO SEPARAT	NON FOURNI SEPAREMI	KEIN ERSATZTEIL	064N
					NO SE REPARA SEPARA	NOT SERVICED SEPARA	NIET ALLEEN VERKRIJG	NOT SERVICED SEPARA	
22		NSS		1	NOT SERVICED SEPARATELY Seal				
						NON FORNITO SEPARAT	NON FOURNI SEPAREMI	KEIN ERSATZTEIL	064N
					NO SE REPARA SEPARA	NOT SERVICED SEPARA	NIET ALLEEN VERKRIJG	NOT SERVICED SEPARA	
23		J924987		1	SHIELD	PROTEZIONE	PROTECTION	SCHUTZ	224P
					PROTECCION	PROTECCAO	AFSCHERMING	BESKYTTELSESKÆRM	
24		J934486		1	KIT, SERVICE Crankshaft, Rear, Inc. 25 - 27				
						KIT ASSISTENZIALE	KIT ASSISTANCE	WARTUNGSSATZ	021K
					KIT, SERVICE	KIT, SERVICE	KIT, SERVICE	SERVICE SAET	

CRANKSHAFT
ALBERO A GOMITI
VILBREQUIN
KURBELWELLE

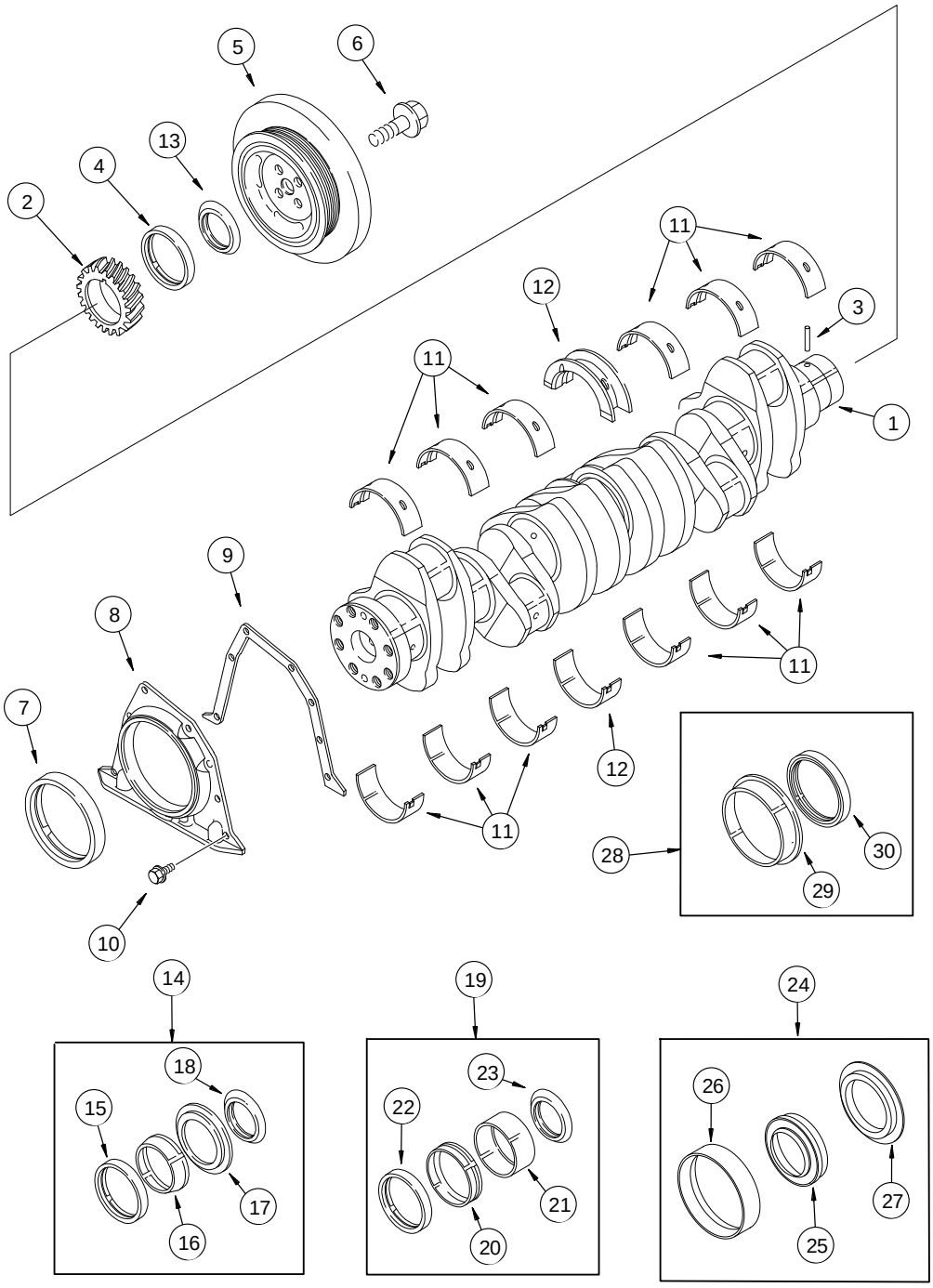

CIGÜEÑAL
EIXO DA CAMBOTA
KRUKAS
KRUMTAPAKSEL

R	N	P.N.	MOD	Q	Description Denominacion	Descrizione Denominação	Description Beschrijving	Bezeichnung Beskrivelse	L.C.
25		NSS		1	NOT SERVICED SEPARATELY Seal				
						NON FORNITO SEPARAT	NON FOURNI SEPAREMI	KEIN ERSATZTEIL	064N
					NO SE REPARA SEPARA	NOT SERVICED SEPARA	NIET ALLEEN VERKRIJG	NOT SERVICED SEPARA	
26		NSS		1	NOT SERVICED SEPARATELY Tool				
						NON FORNITO SEPARAT	NON FOURNI SEPAREMI	KEIN ERSATZTEIL	064N
					NO SE REPARA SEPARA	NOT SERVICED SEPARA	NIET ALLEEN VERKRIJG	NOT SERVICED SEPARA	
27		NSS		1	NOT SERVICED SEPARATELY Tool				
						NON FORNITO SEPARAT	NON FOURNI SEPAREMI	KEIN ERSATZTEIL	064N
					NO SE REPARA SEPARA	NOT SERVICED SEPARA	NIET ALLEEN VERKRIJG	NOT SERVICED SEPARA	
28		A77810		1	KIT, SERVICE Crankshaft, Rear, Inc. 29, 30				
						KIT ASSISTENZIALE	KIT ASSISTANCE	WARTUNGSSATZ	021K
					KIT, SERVICE	KIT, SERVICE	KIT, SERVICE	SERVICE SAET	
29		NSS		1	NOT SERVICED SEPARATELY Sleeve				
						NON FORNITO SEPARAT	NON FOURNI SEPAREMI	KEIN ERSATZTEIL	064N
					NO SE REPARA SEPARA	NOT SERVICED SEPARA	NIET ALLEEN VERKRIJG	NOT SERVICED SEPARA	
30		NSS		1	NOT SERVICED SEPARATELY Seal				
						NON FORNITO SEPARAT	NON FOURNI SEPAREMI	KEIN ERSATZTEIL	064N
					NO SE REPARA SEPARA	NOT SERVICED SEPARA	NIET ALLEEN VERKRIJG	NOT SERVICED SEPARA	

FLYWHEEL
VOLANO
VOLANT MOTEUR
SCHWUNGRAD

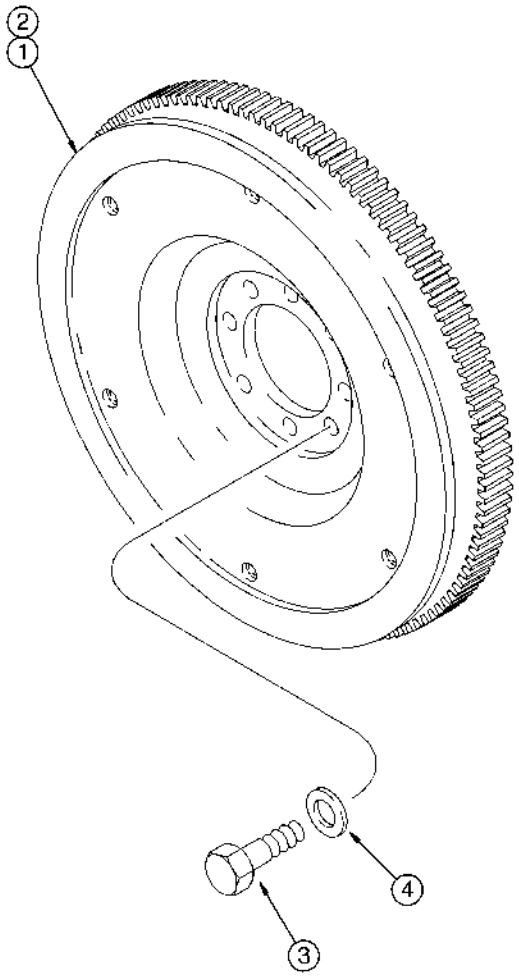

VOLANTE
VOLANTE DO MOTOR
VLIEGWIEL
SVINGHJUL

R	N	P.N.	MOD	Q	Description Denominacion	Descrizione Denominação	Description Beschrijving	Bezeichnung Beskrivelse	L.C.
1		J934838		1	FLYWHEEL Inc. 2 VOLANTE	VOLANO VOLANTE	VOLANT MOTEUR FLYWHEEL	SCHWUNGRAD SVINGHJUL	3570
2		J905031		1	RING ANILLO	ANELLO ANEL	ANNEAU RING	RING RING	045A
3		J901395		8	SCREW M12 x 32 TORNILLO	VITE PARAFUSO	VIS SCHROEF	SCHRAUBE SKRUE	040V
4		J900269		8	WASHER ARANDELA	ROSETTA PIANA ANILHA	RONDELLE SLUITRING	BEILAGSCHEIBE FLADSKIVE	131R

PISTONS - CONNECTING RODS, MX210 AND MX230
PISTONI - BIELLE, MX210 E MX230
TIGES DE CONNEXION DES PISTONS, MX210 ET MX230
KOLBEN - PLEUEL DER SERIEN MX210 UND MX230

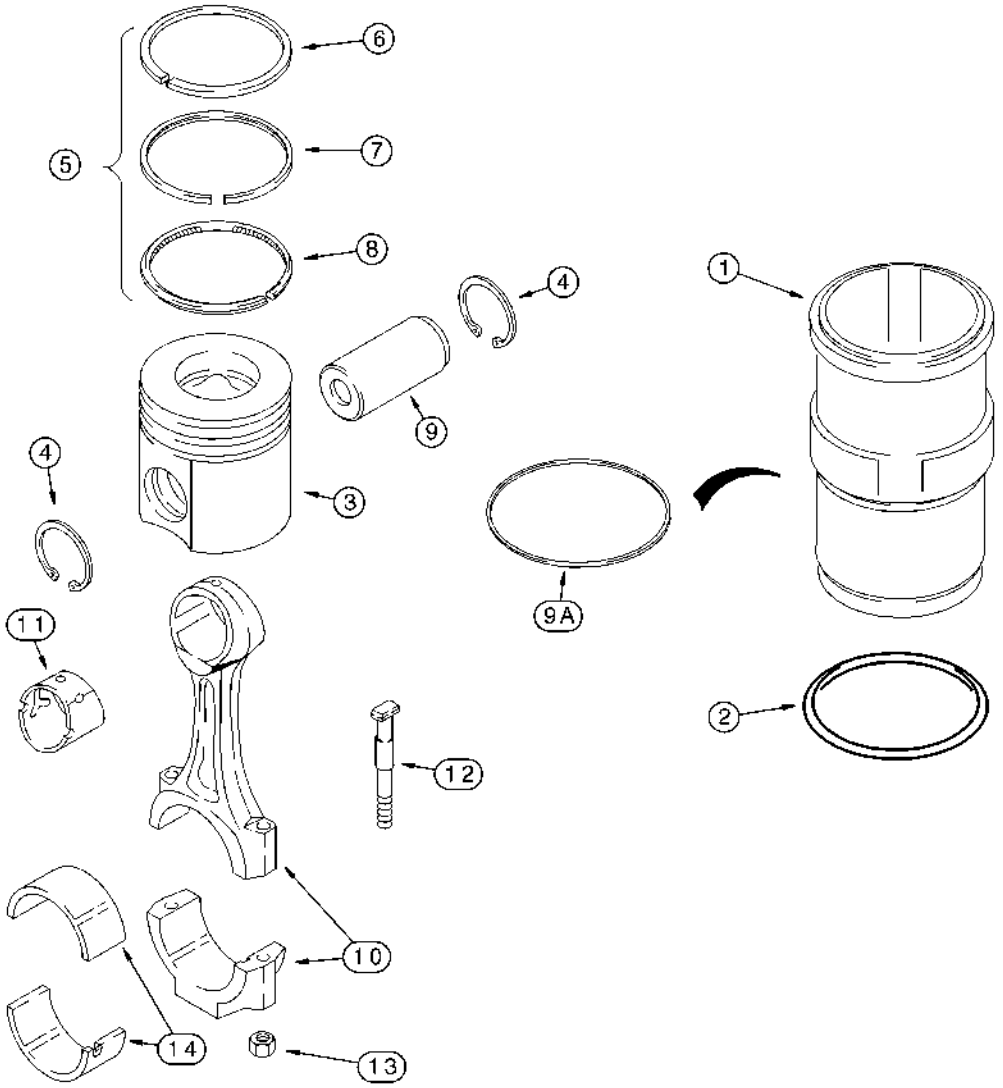

PISTONES - BIELAS, MX210 Y MX230
PISTÕES - BIELAS, MODELOS MX210 E MX230
ZUIGERS - STANGVERBINDINGEN, MX210 EN MX230
STEMPLER - PLEJLSTÆNGER, MX210 OG MX230

R	N	P.N.	MOD	Q	Description Denominacion	Descrizione Denominação	Description Beschrijving	Bezeichnung Beskrivelse	L.C.
		A78038		6	KIT, PISTON & RINGS Standard, Inc. 1 - 8				
						SERIE STANTUFFI E ANE	KIT DE PISTONS & SEGM	KOLBEN & RINGE, SATZ	313S
					SERIE PISTONES	CONJUNTO DE PISTOES	KIT, ZUIGER EN RINGEN	STEMPEL-&-RINGSAET	
1		J948095		1	SLEEVE CYLINDER	MANICOTTO, CILINDRO	CHEMISE DE CYLINDRE	ZYLINDERLAUFBUECHS	P340
					CAMISA DE CILINDRO	CAMISA DE CILINDRO	SLEEVE CYLINDER	CYLINDERKRAVE	
2		J907177		1	O-RING	ANELLO TOROIDALE	JOINT THORIQUE	DICHTRING	055A
					JUNTA HERMETICA	O-RING	O-RING	O-RING	
		J802263		1	KIT, PISTON & RINGS Standard, Inc. 3 - 8				
						SERIE STANTUFFI E ANE	KIT DE PISTONS & SEGM	KOLBEN & RINGE, SATZ	313S
					SERIE PISTONES	CONJUNTO DE PISTOES	KIT, ZUIGER EN RINGEN	STEMPEL-&-RINGSAET	
3		NSS		1	NOT SERVICED SEPARATELY Piston				
						NON FORNITO SEPARAT	NON FOURNI SEPAREMI	KEIN ERSATZTEIL	064N
					NO SE REPARA SEPARA	NOT SERVICED SEPARA	NIET ALLEEN VERKRIJG	NOT SERVICED SEPARA	
4		100-21175		2	RING, SNAP No. 175	ANELLO ELASTICO	ANNEAU D'ARRÊT	SICHERUNGSRING	054A
					ANILLO DE RESORTE	ANEL	RING, SNAP	LÅSERING	
5		J802429		1	KIT, PISTON RINGS Standard, Inc. 6 - 8				
						SERIE ANELLI PISTONE	KIT SEGMENTS DE PIST	KOLBENRINGSATZ	309S
					SERIE ANILLO PISTON	CONJUNTO SEGMENTO:	KIT, ZUIGERRINGEN	STEMPELRINGSAET	
6		NSS		1	NOT SERVICED SEPARATELY Ring, Top				
						NON FORNITO SEPARAT	NON FOURNI SEPAREMI	KEIN ERSATZTEIL	064N
					NO SE REPARA SEPARA	NOT SERVICED SEPARA	NIET ALLEEN VERKRIJG	NOT SERVICED SEPARA	
7		NSS		1	NOT SERVICED SEPARATELY Ring, Middle				
						NON FORNITO SEPARAT	NON FOURNI SEPAREMI	KEIN ERSATZTEIL	064N
					NO SE REPARA SEPARA	NOT SERVICED SEPARA	NIET ALLEEN VERKRIJG	NOT SERVICED SEPARA	
8		NSS		1	NOT SERVICED SEPARATELY Ring, Bottom				
						NON FORNITO SEPARAT	NON FOURNI SEPAREMI	KEIN ERSATZTEIL	064N
					NO SE REPARA SEPARA	NOT SERVICED SEPARA	NIET ALLEEN VERKRIJG	NOT SERVICED SEPARA	
9		J934046		6	PIN	PERNO	AXE	BOLZEN	080P
					PERNO	PERNO	PEN	STIFT	
9A		J924445		X	SHIM 0,254 mm (0,010 in)	SPESSORE	CALE D'EPAISSEUR	EINSTELLSCHEIBCHEN	198S
					SUPLEMENTO	CALCO DE AFINACAO	DIKTEPLAAT	MELLEMLAEG	
9A		J924446		X	SHIM 0,381 mm (0,015 in)	SPESSORE	CALE D'EPAISSEUR	EINSTELLSCHEIBCHEN	198S
					SUPLEMENTO	CALCO DE AFINACAO	DIKTEPLAAT	MELLEMLAEG	
9A		J924447		X	SHIM 0,508 mm (0,020 in)	SPESSORE	CALE D'EPAISSEUR	EINSTELLSCHEIBCHEN	198S
					SUPLEMENTO	CALCO DE AFINACAO	DIKTEPLAAT	MELLEMLAEG	
9A		J924448		X	SHIM 0,762 mm (0,030 in)	SPESSORE	CALE D'EPAISSEUR	EINSTELLSCHEIBCHEN	198S
					SUPLEMENTO	CALCO DE AFINACAO	DIKTEPLAAT	MELLEMLAEG	
9A		J924449		X	SHIM 1,016 mm (0,040 in)	SPESSORE	CALE D'EPAISSEUR	EINSTELLSCHEIBCHEN	198S
					SUPLEMENTO	CALCO DE AFINACAO	DIKTEPLAAT	MELLEMLAEG	
		J901383		6	ROD, CONNECTING New, Inc. 10 - 13				
						BIELLA STANTUFFO	BIELLE	PLEUELSTANGE	051B
					BIELA DE EMBOLO	BIELA DE EMBOLO	VERBINDINGSSTANG	STEMPELSTANG	
10		NSS		1	NOT SERVICED SEPARATELY Rod				
						NON FORNITO SEPARAT	NON FOURNI SEPAREMI	KEIN ERSATZTEIL	064N
					NO SE REPARA SEPARA	NOT SERVICED SEPARA	NIET ALLEEN VERKRIJG	NOT SERVICED SEPARA	
11		J913990		1	BUSHING	BOCCOLA	BAGUE	BUECHSE	095B
					CASQUILLO	CASQUILHO	LAGERBUS	BOESNING	
12		J928870		2	BOLT	BULLONE	BOULON	SCHAUBENBOLZEN	140B
					TORNILLO	PARAFUSO	BOUT	SKRUE	

PISTONS - CONNECTING RODS, MX210 AND MX230
PISTONI - BIELLE, MX210 E MX230
TIGES DE CONNEXION DES PISTONS, MX210 ET MX230
KOLBEN - PLEUEL DER SERIEN MX210 UND MX230

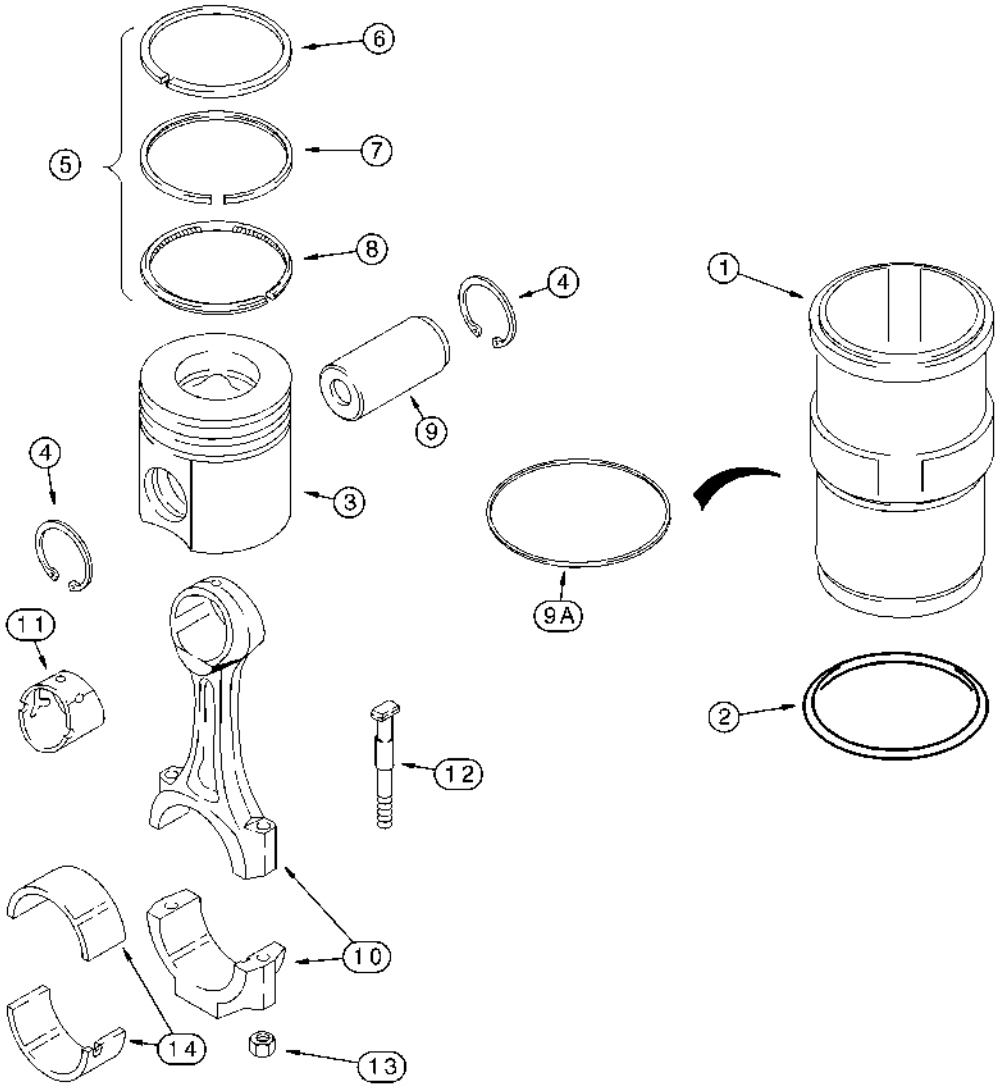

PISTONES - BIELAS, MX210 Y MX230
PISTÕES - BIELAS, MODELOS MX210 E MX230
ZUIGERS - STANGVERBINDINGEN, MX210 EN MX230
STEMPLER - PLEJLSTÆNGER, MX210 OG MX230

R	N	P.N.	MOD	Q	Description Denominacion	Descrizione Denominação	Description Beschrijving	Bezeichnung Beskrivelse	L.C.
13		J934864		2	NUT TUERCA	DADO PORCA	ECROU MOER	MUTTER MØTRIK	010D
14		A77563		6	BEARING LINER Standard COJINETE	CUSCINETTO DI BANCO ROLAMENTO	COUSSINET BEARING LINER	LAGERMETALL LEJESØLE	P114
14		A77564		6	BEARING LINER Undersize 0,25 mm COJINETE	CUSCINETTO DI BANCO ROLAMENTO	COUSSINET BEARING LINER	LAGERMETALL LEJESØLE	P114
14		A77565		6	BEARING LINER Undersize 0,50 mm COJINETE	CUSCINETTO DI BANCO ROLAMENTO	COUSSINET BEARING LINER	LAGERMETALL LEJESØLE	P114
14		A77566		6	BEARING LINER Undersize 0,75 mm COJINETE	CUSCINETTO DI BANCO ROLAMENTO	COUSSINET BEARING LINER	LAGERMETALL LEJESØLE	P114
14		A77567		6	BEARING LINER Undersize 1,00 mm COJINETE	CUSCINETTO DI BANCO ROLAMENTO	COUSSINET BEARING LINER	LAGERMETALL LEJESØLE	P114

PISTONS - CONNECTING RODS, MX255 AND MX285
PISTONI - BIELLE, MX255 E MX285
TIGES DE CONNEXION DES PISTONS, MX255 ET MX285
KOLBEN - PLEUEL DER SERIEN MX255 UND MX285

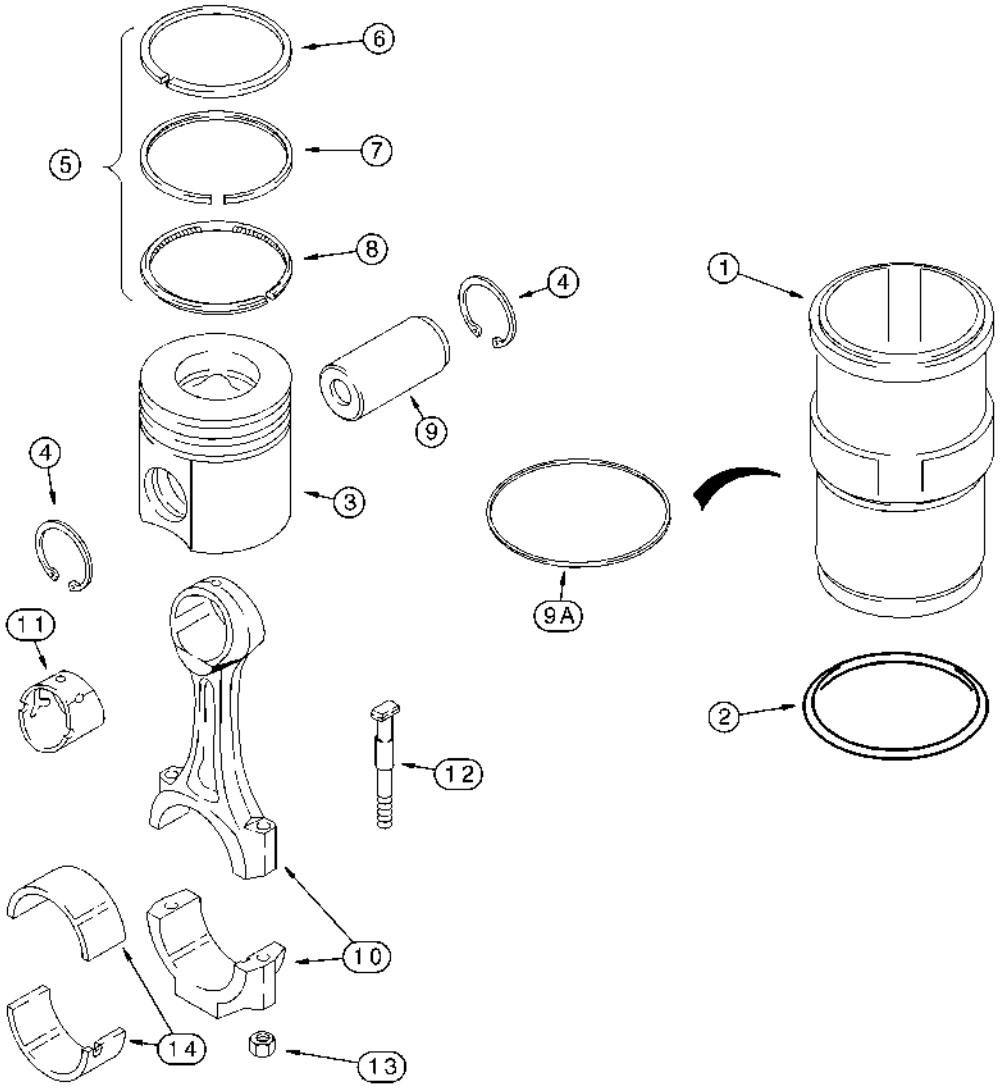

PISTONES - BIELAS, MX255 Y MX285
PISTÕES - BIELAS, MODELOS MX255 E MX285
ZUIGERS - STANGVERBINDINGEN, MX255 EN MX285
STEMPLER - PLEJLSTÆNGER, MX255 OG MX285

R	N	P.N.	MOD	Q	Description Denominacion	Descrizione Denominação	Description Beschrijving	Bezeichnung Beskrivelse	L.C.
	1	**A77901**		6	KIT, PISTON & RINGS Piston & Rings, Standard, Inc. 1 - 8				
						SERIE STANTUFFI E ANE	KIT DE PISTONS & SEGM	KOLBEN & RINGE, SATZ	313S
					SERIE PISTONES	CONJUNTO DE PISTOES	KIT, ZUIGER EN RINGEN	STEMPEL-&-RINGSAET	
	2	**A77970**		6	KIT, PISTON & RINGS Standard, Inc. 1 - 8				
						SERIE STANTUFFI E ANE	KIT DE PISTONS & SEGM	KOLBEN & RINGE, SATZ	313S
					SERIE PISTONES	CONJUNTO DE PISTOES	KIT, ZUIGER EN RINGEN	STEMPEL-&-RINGSAET	
1		**J948095**		1	SLEEVE CYLINDER	MANICOTTO, CILINDRO	CHEMISE DE CYLINDRE	ZYLINDERLAUFBUECHS	P340
					CAMISA DE CILINDRO	CAMISA DE CILINDRO	SLEEVE CYLINDER	CYLINDERKRAVE	
2		**J907177**		1	O-RING	ANELLO TOROIDALE	JOINT THORIQUE	DICHTRING	055A
					JUNTA HERMETICA	O-RING	O-RING	O-RING	
	1	**J800316**		1	KIT, PISTON & RINGS Standard, Inc. 3 - 8				
						SERIE STANTUFFI E ANE	KIT DE PISTONS & SEGM	KOLBEN & RINGE, SATZ	313S
					SERIE PISTONES	CONJUNTO DE PISTOES	KIT, ZUIGER EN RINGEN	STEMPEL-&-RINGSAET	
	2	**J800320**		1	KIT, PISTON & RINGS Standard, Inc. 3 - 8				
						SERIE STANTUFFI E ANE	KIT DE PISTONS & SEGM	KOLBEN & RINGE, SATZ	313S
					SERIE PISTONES	CONJUNTO DE PISTOES	KIT, ZUIGER EN RINGEN	STEMPEL-&-RINGSAET	
3		**NSS**		1	NOT SERVICED SEPARATELY Piston				
						NON FORNITO SEPARAT	NON FOURNI SEPAREMI	KEIN ERSATZTEIL	064N
					NO SE REPARA SEPARA	NOT SERVICED SEPARA	NIET ALLEEN VERKRIJG	NOT SERVICED SEPARA	
4		**100-21175**		2	RING, SNAP No. 175	ANELLO ELASTICO	ANNEAU D'ARRÊT	SICHERUNGSRING	054A
					ANILLO DE RESORTE	ANEL	RING, SNAP	LÅSERING	
5	1	**J802429**		1	KIT, PISTON RINGS Standard, Inc. 6 - 8				
						SERIE ANELLI PISTONE	KIT SEGMENTS DE PIST	KOLBENRINGSATZ	309S
					SERIE ANILLO PISTON	CONJUNTO SEGMENTO	KIT, ZUIGERRINGEN	STEMPELRINGSAET	
5	2	**J802538**		1	KIT, PISTON RINGS Standard, Inc. 6 - 8				
						SERIE ANELLI PISTONE	KIT SEGMENTS DE PIST	KOLBENRINGSATZ	309S
					SERIE ANILLO PISTON	CONJUNTO SEGMENTO	KIT, ZUIGERRINGEN	STEMPELRINGSAET	
6		**NSS**		1	NOT SERVICED SEPARATELY Ring, Top				
						NON FORNITO SEPARAT	NON FOURNI SEPAREMI	KEIN ERSATZTEIL	064N
					NO SE REPARA SEPARA	NOT SERVICED SEPARA	NIET ALLEEN VERKRIJG	NOT SERVICED SEPARA	
7		**NSS**		1	NOT SERVICED SEPARATELY Ring, Middle				
						NON FORNITO SEPARAT	NON FOURNI SEPAREMI	KEIN ERSATZTEIL	064N
					NO SE REPARA SEPARA	NOT SERVICED SEPARA	NIET ALLEEN VERKRIJG	NOT SERVICED SEPARA	
8		**NSS**		1	NOT SERVICED SEPARATELY Ring, Bottom				
						NON FORNITO SEPARAT	NON FOURNI SEPAREMI	KEIN ERSATZTEIL	064N
					NO SE REPARA SEPARA	NOT SERVICED SEPARA	NIET ALLEEN VERKRIJG	NOT SERVICED SEPARA	
9		**J934046**		6	PIN	PERNO	AXE	BOLZEN	080P
					PERNO	PERNO	PEN	STIFT	
9A		**J924445**		X	SHIM 0,254 mm (0,010 in)	SPESSORE	CALE D'EPAISSEUR	EINSTELLSCHEIBCHEN	198S
					SUPLEMENTO	CALCO DE AFINACAO	DIKTEPLAAT	MELLEMLAEG	
9A		**J924446**		X	SHIM 0,381 mm (0,015 in)	SPESSORE	CALE D'EPAISSEUR	EINSTELLSCHEIBCHEN	198S
					SUPLEMENTO	CALCO DE AFINACAO	DIKTEPLAAT	MELLEMLAEG	
9A		**J924447**		X	SHIM 0,508 mm (0,020 in)	SPESSORE	CALE D'EPAISSEUR	EINSTELLSCHEIBCHEN	198S
					SUPLEMENTO	CALCO DE AFINACAO	DIKTEPLAAT	MELLEMLAEG	
9A		**J924448**		X	SHIM 0,762 mm (0,030 in)	SPESSORE	CALE D'EPAISSEUR	EINSTELLSCHEIBCHEN	198S
					SUPLEMENTO	CALCO DE AFINACAO	DIKTEPLAAT	MELLEMLAEG	

(1) MX255
(2) MX285

PISTONS - CONNECTING RODS, MX255 AND MX285
PISTONI - BIELLE, MX255 E MX285
TIGES DE CONNEXION DES PISTONS, MX255 ET MX285
KOLBEN - PLEUEL DER SERIEN MX255 UND MX285

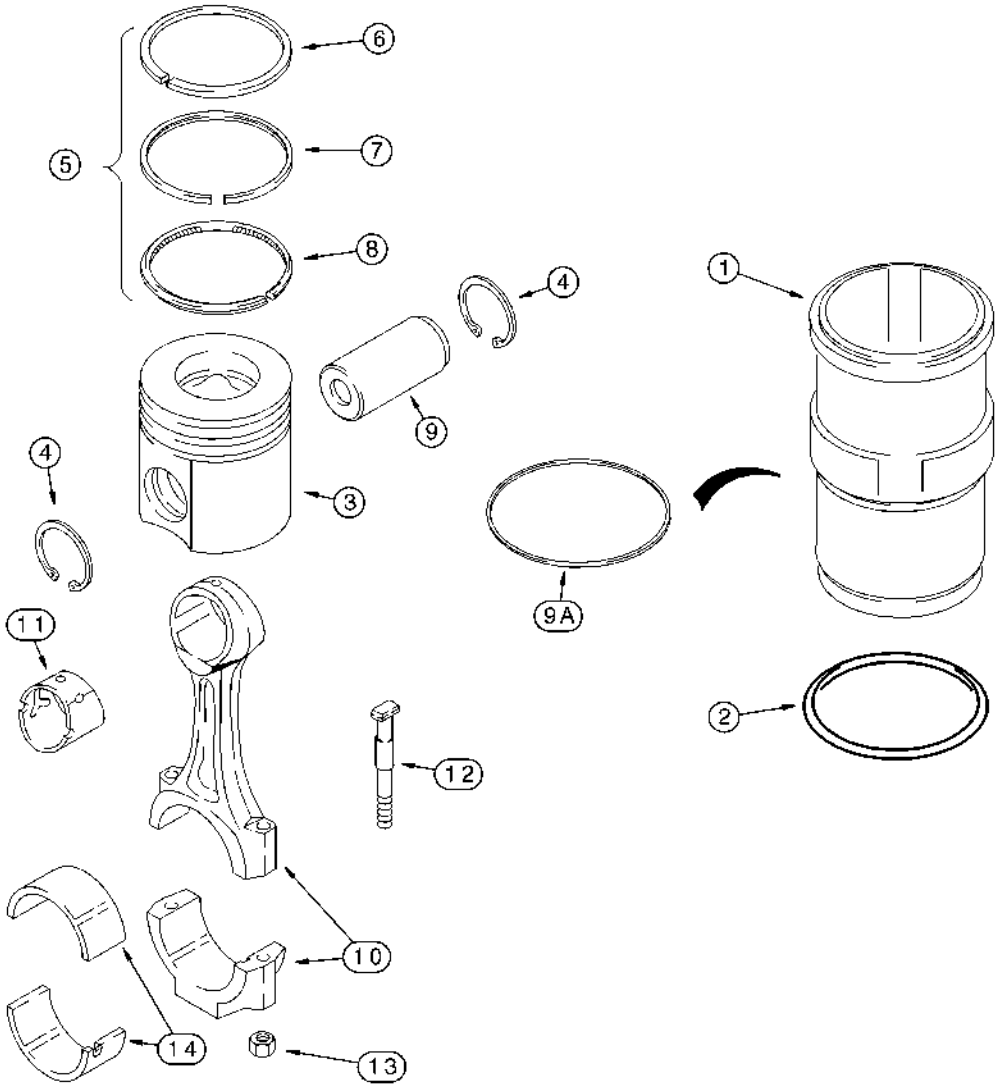

PISTONES - BIELAS, MX255 Y MX285
PISTÕES - BIELAS, MODELOS MX255 E MX285
ZUIGERS - STANGVERBINDINGEN, MX255 EN MX285
STEMPLER - PLEJLSTÆNGER, MX255 OG MX285

R	N	P.N.	MOD	Q	Description Denominacion	Descrizione Denominação	Description Beschrijving	Bezeichnung Beskrivelse	L.C.
9A		J924449		X	SHIM 1,016 mm (0,040 in)	SPESSORE	CALE D'EPAISSEUR	EINSTELLSCHEIBCHEN	198S
					SUPLEMENTO	CALCO DE AFINACAO	DIKTEPLAAT	MELLEMLAEG	
		J901383		6	ROD, CONNECTING New, Inc. 10 - 13				
						BIELLA STANTUFFO	BIELLE	PLEUELSTANGE	051B
					BIELA DE EMBOLO	BIELA DE EMBOLO	VERBINDINGSSTANG	STEMPELSTANG	
10		NSS		1	NOT SERVICED SEPARATELY Rod				
						NON FORNITO SEPARAT	NON FOURNI SEPAREMI	KEIN ERSATZTEIL	064N
					NO SE REPARA SEPARA	NOT SERVICED SEPARA	NIET ALLEEN VERKRIJG	NOT SERVICED SEPARA	
11		J913990		1	BUSHING	BOCCOLA	BAGUE	BUECHSE	095B
					CASQUILLO	CASQUILHO	LAGERBUS	BOESNING	
12		J928870		2	BOLT	BULLONE	BOULON	SCHAUBENBOLZEN	140B
					TORNILLO	PARAFUSO	BOUT	SKRUE	
13		J934864		2	NUT	DADO	ECROU	MUTTER	010D
					TUERCA	PORCA	MOER	MØTRIK	
14		A77563		6	BEARING LINER Standard	CUSCINETTO DI BANCO	COUSSINET	LAGERMETALL	P114
					COJINETE	ROLAMENTO	BEARING LINER	LEJESØLE	
14		A77564		6	BEARING LINER Undersize 0,25 mm				
						CUSCINETTO DI BANCO	COUSSINET	LAGERMETALL	P114
					COJINETE	ROLAMENTO	BEARING LINER	LEJESØLE	
14		A77565		6	BEARING LINER Undersize 0,50 mm				
						CUSCINETTO DI BANCO	COUSSINET	LAGERMETALL	P114
					COJINETE	ROLAMENTO	BEARING LINER	LEJESØLE	
14		A77566		6	BEARING LINER Undersize 0,75 mm				
						CUSCINETTO DI BANCO	COUSSINET	LAGERMETALL	P114
					COJINETE	ROLAMENTO	BEARING LINER	LEJESØLE	
14		A77567		6	BEARING LINER Undersize 1,00 mm				
						CUSCINETTO DI BANCO	COUSSINET	LAGERMETALL	P114
					COJINETE	ROLAMENTO	BEARING LINER	LEJESØLE	

02-44		p1	11/04

GASKET KIT - VALVE GRIND, MX210 AND MX230
SERIE DI GUARNIZIONI - SMERIGLIATURA DELLE VALVOLE, MX210 E MX230
KIT DE JOINTS D'ÉTANCHÉITÉ POUR SOUPAPE MEULÉE, MX210 ET MX230
DICHTUNGSKIT - VENTILSCHLIFF DER SERIEN MX210 UND MX230

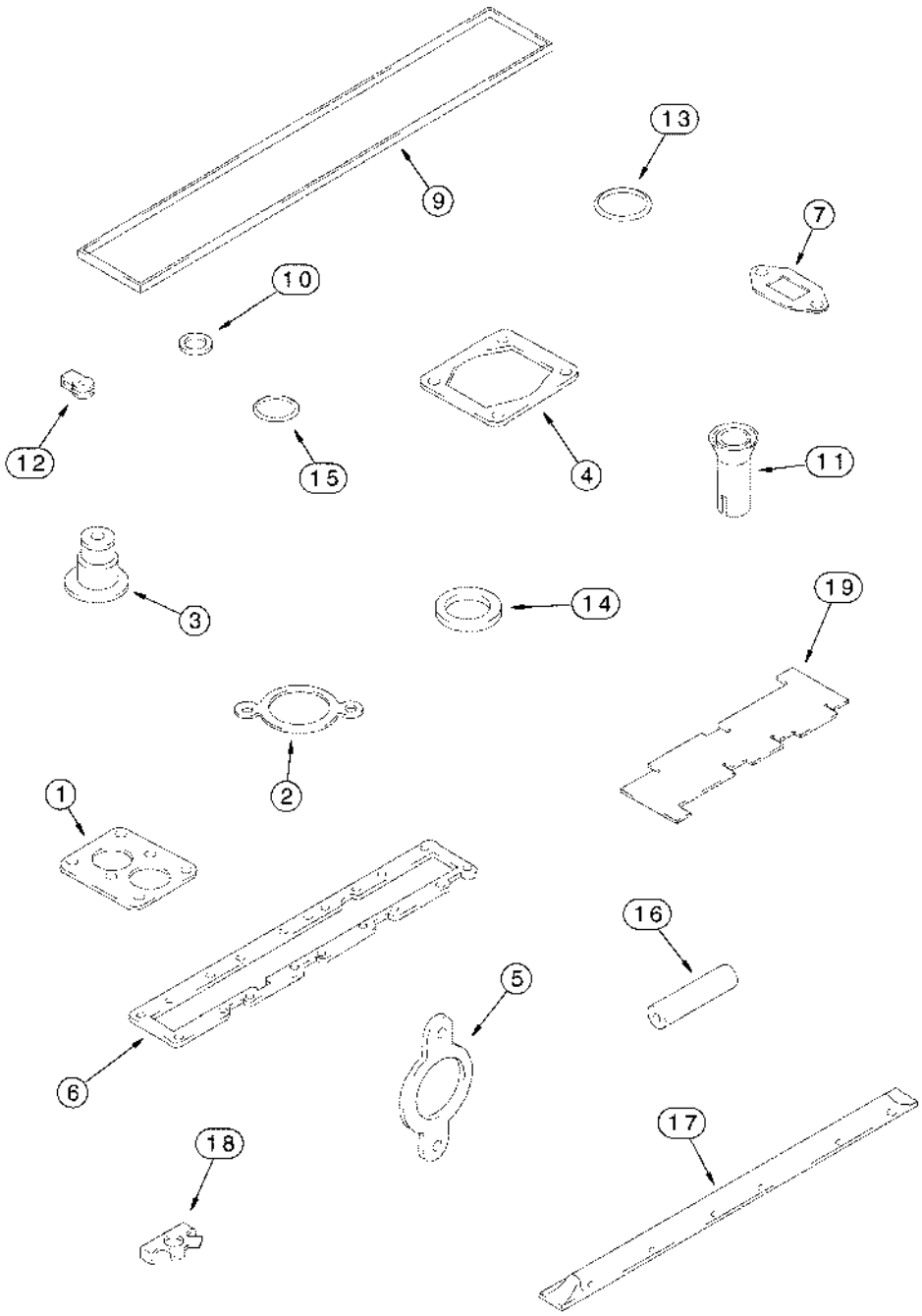

JUEGO DE JUNTAS - VÁLVULA RECTIFICADORA, MX210 Y MX230
KIT DE VEDAÇÃO - VÁLVULA ESMERILHADA, MODELOS MX210 E MX230
PAKKINGSET - KLEP SLIJPEN, MX210 EN MX230
PAKNINGSSÆT - VENTILSLIBNING, MX210 OG MX230

R	N	P.N.	MOD	Q	Description Denominacion	Descrizione Denominação	Description Beschrijving	Bezeichnung Beskrivelse	L.C.
		A78042		1	GASKET, CYLINDER HEAD Valve Grind, Inc. 1 - 19				
						GUARNIZIONE TESTA CI	JOINT DE CULASSE	ZYLINDERKOPFDICHTUI	129G
					JUNTA DE CULATA	JUNTA DA CABECA	CYLINDERKOPDICHTING	TOPPAKNING	
1		J914310		1	GASKET	GUARNIZIONE	JOINT	DICHTUNG, FLACH	123G
					JUNTA HERMETICA	JUNTA	DICHTINGSSTUK	PAKNING	
2		J918779		1	GASKET	GUARNIZIONE	JOINT	DICHTUNG, FLACH	123G
					JUNTA HERMETICA	JUNTA	DICHTINGSSTUK	PAKNING	
2		J918779		1	GASKET	GUARNIZIONE	JOINT	DICHTUNG, FLACH	123G
					JUNTA HERMETICA	JUNTA	DICHTINGSSTUK	PAKNING	
3		J927642		12	SEAL	ANELLO DI TENUTA	JOINT	DICHTUNG	132A
					ANILLO DE CIERRE	ANEL DE VEDACAO	DICHTINGSRING	PAKNINGSRING	
4		J755843		1	GASKET	GUARNIZIONE	JOINT	DICHTUNG, FLACH	123G
					JUNTA HERMETICA	JUNTA	DICHTINGSSTUK	PAKNING	
5		J929012		6	GASKET	GUARNIZIONE	JOINT	DICHTUNG, FLACH	123G
					JUNTA HERMETICA	JUNTA	DICHTINGSSTUK	PAKNING	
6		J936993		1	GASKET, MANIFOLD	GUARNIZIONE COLLETT	JOINT DE COLLECTEUR	KRÜMMERDICHTUNG	125G
					JUNTA COLECTOR	JUNTA COLECTOR	DICHTING, SPRUITSTUK	MINIFOLD PAKNING	
7		J937706		1	GASKET	GUARNIZIONE	JOINT	DICHTUNG, FLACH	123G
					JUNTA HERMETICA	JUNTA	DICHTINGSSTUK	PAKNING	
9		J905449		1	SEAL, RUBBER	GUARNIZIONE DI GOMM	JOINT, CAOUTCHOUC	GUMMIDICHTUNG	122G
					JUNTA DE CAUCHO	JUNTAS	DICHTING, RUBBER	GUMMITAETNING	
10		J910824		6	O-RING	ANELLO TOROIDALE	JOINT THORIQUE	DICHTRING	055A
					JUNTA HERMETICA	O-RING	O-RING	O-RING	
11		J909886		6	SEAL	ANELLO DI TENUTA	JOINT	DICHTUNG	132A
					ANILLO DE CIERRE	ANEL DE VEDACAO	DICHTINGSRING	PAKNINGSRING	
12		J903380		7	SEAL	ANELLO DI TENUTA	JOINT	DICHTUNG	132A
					ANILLO DE CIERRE	ANEL DE VEDACAO	DICHTINGSRING	PAKNINGSRING	
13		238-5115		1	O-RING 11/16 ID x 3/32	ANELLO TOROIDALE	JOINT TORIQUE	O-RING	7176
					JUNTA HERMETICA	ANEL O	O-RING	O-RING	
14		J923261		6	WASHER 2,5 mm	ROSETTA PIANA	RONDELLE	BEILAGSCHEIBE	131R
					ARANDELA	ANILHA	SLUITRING	FLADSKIVE	
15		238-5111		1	O-RING 7/16 ID x 3/32	ANELLO TOROIDALE	JOINT TORIQUE	O-RING	7176
					JUNTA HERMETICA	ANEL O	O-RING	O-RING	
16		J930827		1	HOSE, LARGE 51 mm (2 in)				
						TUBO FLESSIBILE,GRDE	DURITE	SCHLAUCH, GROSS	Z336
					MANGUITO	MANGOTE	HOSE, LARGE	HOSE, LARGE	
17		J919677		1	MANIFOLD	COLLETTORE	COLLECTEUR	KRÜMMER	198C
					COLECTOR	COLECTOR	MANIFOLD	VERDEELSTUK	
18		J914708		12	PLATE, LOCKING	PIASTRINA DI SICUREZZ	PLAQUE D'ARRÊT	VERSCHLUSSBLECH	113P
					PLACA DE FRENO	CHAPA DE SEGURANCA	BORGPLAAT	LÅSEPLADE	
19		J823921		1	GAUGE	CALIBRO	JAUGE	MESSGERÄT	Z211
					CALIBRE	MANOMETRO	MEETAPPARAAT	MANOMETER	

02-45		p1	11/04

GASKET KIT - VALVE GRIND, MX255 AND MX285
SERIE DI GUARNIZIONI - SMERIGLIATURA DELLE VALVOLE, MX255 E MX285
KIT DE JOINTS D'ÉTANCHÉITÉ POUR SOUPAPE MEULÉE, MX255 ET MX285
DICHTUNGSKIT - VENTILSCHLIFF DER SERIEN MX255 UND MX285

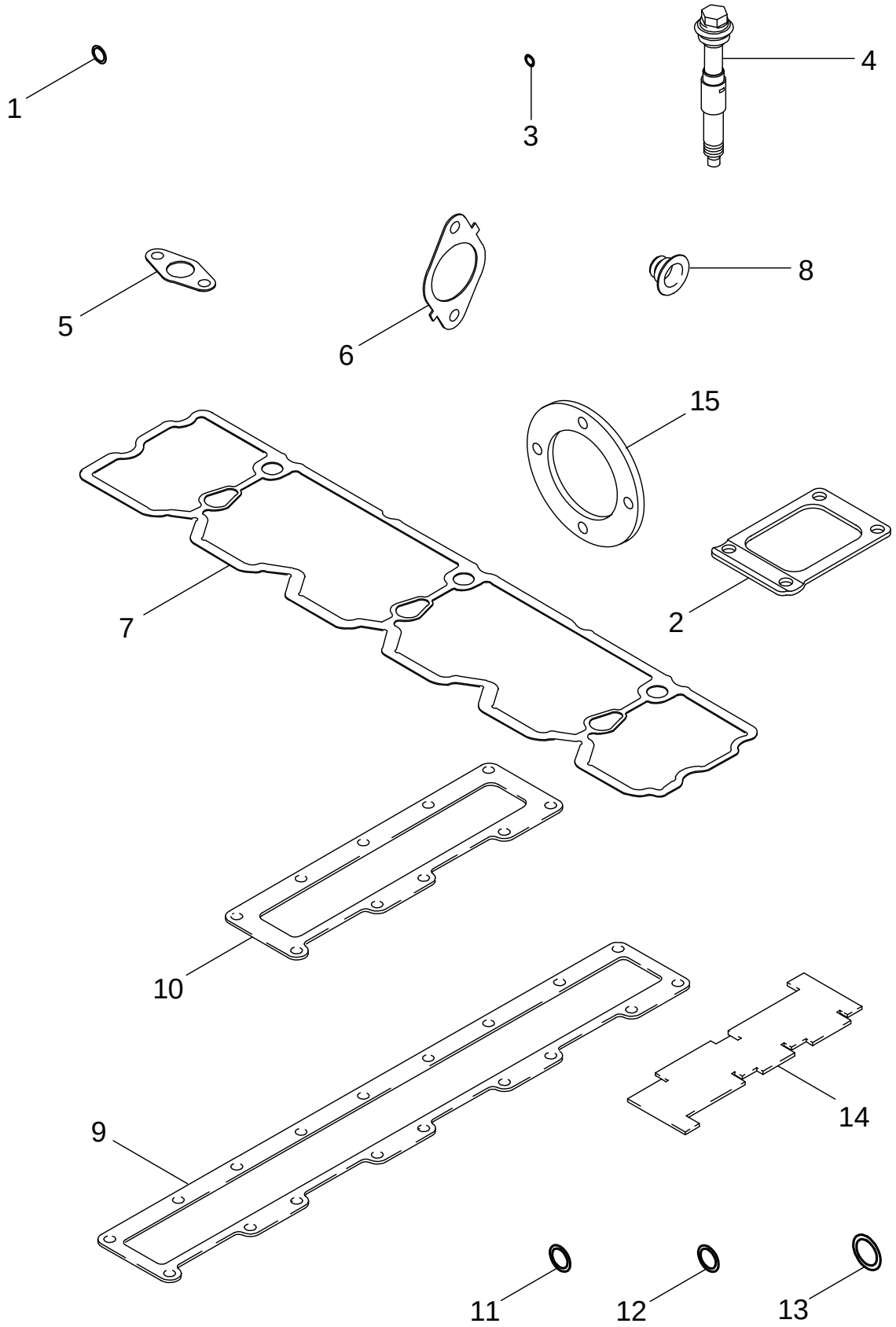

JUEGO DE JUNTAS - VÁLVULA RECTIFICADORA, MX255 Y MX285
KIT DE VEDAÇÃO - VÁLVULA ESMERILHADA, MODELOS MX255 E MX285
PAKKINGSET - KLEP SLIJPEN, MX255 EN MX285
PAKNINGSSÆT - VENTILSLIBNING, MX255 OG MX285

R	N	P.N.	MOD	Q	Description Denominacion	Descrizione Denominação	Description Beschrijving	Bezeichnung Beskrivelse	L.C.
		A78018		1	KIT, GASKET Inc. 1 - 14 EMPAQUE DE JUNTAS	CONFEZIONE, GUARNIZ JOGO DE JUNTAS	JEU JOINTS ETANCHEIT KIT, GASKET	DICHTUNGSSATZ PAKNINGS PAKKE	3740
1	1	J867043		6	SEAL Injector ANILLO DE CIERRE	ANELLO DI TENUTA ANEL DE VEDACAO	JOINT DICHTINGSRING	DICHTUNG PAKNINGSRING	132A
2	2	J919369		1	GASKET Mounting, Turbocharger JUNTA HERMETICA	GUARNIZIONE JUNTA	JOINT DICHTINGSSTUK	DICHTUNG, FLACH PAKNING	123G
3	3	J937142		6	SEAL 7 mm, Nozzle ANILLO DE CIERRE	ANELLO DI TENUTA ANEL DE VEDACAO	JOINT DICHTINGSRING	DICHTUNG PAKNINGSRING	132A
4		J990876		5	ISOLATOR Valve Cover Screws AISLADOR	DISPOSITIVO ANTIVIB ISOLADOR	ISOLATEUR ISOLATOR	ISOLATOR ISOLATOR	Z082
5	2	J937706		1	GASKET Oil Drain JUNTA HERMETICA	GUARNIZIONE JUNTA	JOINT DICHTINGSSTUK	DICHTUNG, FLACH PAKNING	123G
6	4	J937479		6	GASKET, MANIFOLD Exhaust JUNTA COLECTOR	GUARNIZIONE COLLETT JUNTA COLECTOR	JOINT DE COLLECTEUR DICHTING, SPRUITSTUK	KRÜMMERDICHTUNG MINIFOLD PAKNING	125G
7	5	J939284		1	GASKET Valve Cover JUNTA HERMETICA	GUARNIZIONE JUNTA	JOINT DICHTINGSSTUK	DICHTUNG, FLACH PAKNING	123G
8	6	J943888		24	SEAL Intake Valve ANILLO DE CIERRE	ANELLO DI TENUTA ANEL DE VEDACAO	JOINT DICHTINGSRING	DICHTUNG PAKNINGSRING	132A
9	4	J944646		1	GASKET, MANIFOLD Intake JUNTA COLECTOR	GUARNIZIONE COLLETT JUNTA COLECTOR	JOINT DE COLLECTEUR DICHTING, SPRUITSTUK	KRÜMMERDICHTUNG MINIFOLD PAKNING	125G
10	4	J944647		1	GASKET Connector Mounting JUNTA HERMETICA	GUARNIZIONE JUNTA	JOINT DICHTINGSSTUK	DICHTUNG, FLACH PAKNING	123G
11		237-6005		2	O-RING 13/32 ID x 5/64 JUNTA HERMETICA	ANELLO TOROIDALE ANEL O	JOINT TORIQUE O-RING	O-RING O-RING	7176
12	3	238-7210		6	O-RING 3/4 ID x 9/64 JUNTA HERMETICA	ANELLO TOROIDALE ANEL O	JOINT TORIQUE O-RING	O-RING O-RING	7176
13		313262A1		2	SEAL 9,2 mm ID x 1,7 mm ANILLO DE CIERRE	ANELLO DI TENUTA ANEL DE VEDACAO	JOINT DICHTINGSRING	DICHTUNG PAKNINGSRING	132A
14		J823921		1	GAUGE Length CALIBRE	CALIBRO MANOMETRO	JAUGE MEETAPPARAAT	MESSGERÄT MANOMETER	Z211
15		J917892		1	GASKET JUNTA HERMETICA	GUARNIZIONE JUNTA	JOINT DICHTINGSSTUK	DICHTUNG, FLACH PAKNING	123G

(1) See Figure 03-06
(2) See Figure 02-13
(3) See Figure 03-13
(4) See Figure 02-12
(5) See Figure 02-18
(6) See Figure 02-19

02-46		p1	11/04

GASKET KIT - CYLINDER BLOCK, MX210 AND MX230
SERIE DI GUARNIZIONI - MONOBLOCCO, MX210 E MX230
KIT DE JOINTS D'ÉTANCHÉITÉ POUR BLOC-CYLINDRES, MX210 ET MX230
DICHTUNGSKIT - ZYLINDERBLOCK DER SERIEN MX210 UND MX230

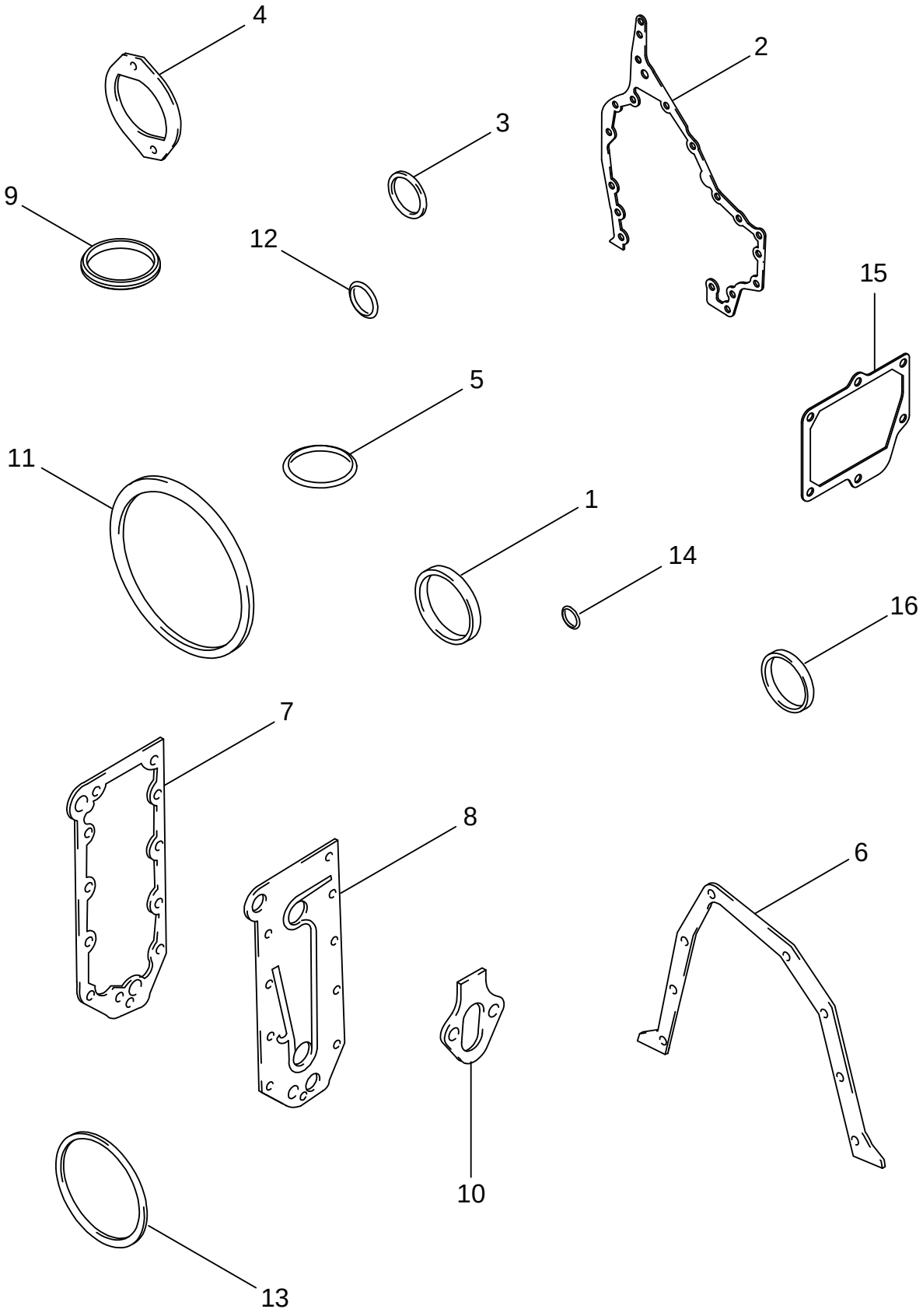

JUEGO DE JUNTAS - BLOQUE DE CILINDRO, MX210 Y MX230
KIT DE VEDAÇÃO - BLOCO DO CILINDRO, MODELOS MX210 E MX230
PAKKINGSET - CILINDERBLOK, MX210 EN MX230
PAKNINGSSÆT - CYLINDERBLOK, MX210 OG MX230

R	N	P.N.	MOD	Q	Description Denominacion	Descrizione Denominação	Description Beschrijving	Bezeichnung Beskrivelse	L.C.
		87416345		1	SUPPORT Cylinder Block, Inc. 1 - 16				
						SUPPORTO	SUPPORT	STUETZE	8790
					APOYADERO	SUPORTE	SUPPORT	SUPPORT	
1		**J903475**		1	SEAL	ANELLO DI TENUTA	JOINT	DICHTUNG	132A
					ANILLO DE CIERRE	ANEL DE VEDACAO	DICHTINGSRING	PAKNINGSRING	
2		**J944293**		1	GASKET	GUARNIZIONE	JOINT	DICHTUNG, FLACH	123G
					JUNTA HERMETICA	JUNTA	DICHTINGSSTUK	PAKNING	
3		**J915772**		1	SEALRING	ANELLO, GUARNIZIONE	JOINT ANNULAIRE	LIPPENDICHTING	Z125
					RETEN	ANEL VEDADOR	SEALRING	SEALRING	
4		**J938655**		1	GASKET	GUARNIZIONE	JOINT	DICHTUNG, FLACH	123G
					JUNTA HERMETICA	JUNTA	DICHTINGSSTUK	PAKNING	
5		**238-5244**		1	O-RING	ANELLO TOROIDALE	JOINT TORIQUE	O-RING	7176
					JUNTA HERMETICA	ANEL O	O-RING	O-RING	
6		**J914301**		1	GASKET	GUARNIZIONE	JOINT	DICHTUNG, FLACH	123G
					JUNTA HERMETICA	JUNTA	DICHTINGSSTUK	PAKNING	
7		**J918174**		1	GASKET	GUARNIZIONE	JOINT	DICHTUNG, FLACH	123G
					JUNTA HERMETICA	JUNTA	DICHTINGSSTUK	PAKNING	
8		**J4063496**		1	GASKET	GUARNIZIONE	JOINT	DICHTUNG, FLACH	123G
					JUNTA HERMETICA	JUNTA	DICHTINGSSTUK	PAKNING	
9		**J924605**		1	SEAL	ANELLO DI TENUTA	JOINT	DICHTUNG	132A
					ANILLO DE CIERRE	ANEL DE VEDACAO	DICHTINGSRING	PAKNINGSRING	
10		**J939258**		1	GASKET	GUARNIZIONE	JOINT	DICHTUNG, FLACH	123G
					JUNTA HERMETICA	JUNTA	DICHTINGSSTUK	PAKNING	
11		**J912473**		1	O-RING	ANELLO TOROIDALE	JOINT THORIQUE	DICHTRING	055A
					JUNTA HERMETICA	O-RING	O-RING	O-RING	
12		**238-5212**		1	O-RING 7/8 ID x 1/8	ANELLO TOROIDALE	JOINT TORIQUE	O-RING	7176
					JUNTA HERMETICA	ANEL O	O-RING	O-RING	
13		**J907177**		6	O-RING	ANELLO TOROIDALE	JOINT THORIQUE	DICHTRING	055A
					JUNTA HERMETICA	O-RING	O-RING	O-RING	
14		**J913994**		1	O-RING	ANELLO TOROIDALE	JOINT THORIQUE	DICHTRING	055A
					JUNTA HERMETICA	O-RING	O-RING	O-RING	
15		**J944683**		1	GASKET	GUARNIZIONE	JOINT	DICHTUNG, FLACH	123G
					JUNTA HERMETICA	JUNTA	DICHTINGSSTUK	PAKNING	
16		**J926722**		1	SEAL	ANELLO DI TENUTA	JOINT	DICHTUNG	132A
					ANILLO DE CIERRE	ANEL DE VEDACAO	DICHTINGSRING	PAKNINGSRING	

02-47		p1	11/04

GASKET KIT - CYLINDER BLOCK, MX255 AND MX285
SERIE DI GUARNIZIONI - MONOBLOCCO, MX255 E MX285
KIT DE JOINTS D'ÉTANCHÉITÉ POUR BLOC-CYLINDRES, MX255 ET MX285
DICHTUNGSKIT - ZYLINDERBLOCK DER SERIEN MX255 UND MX285

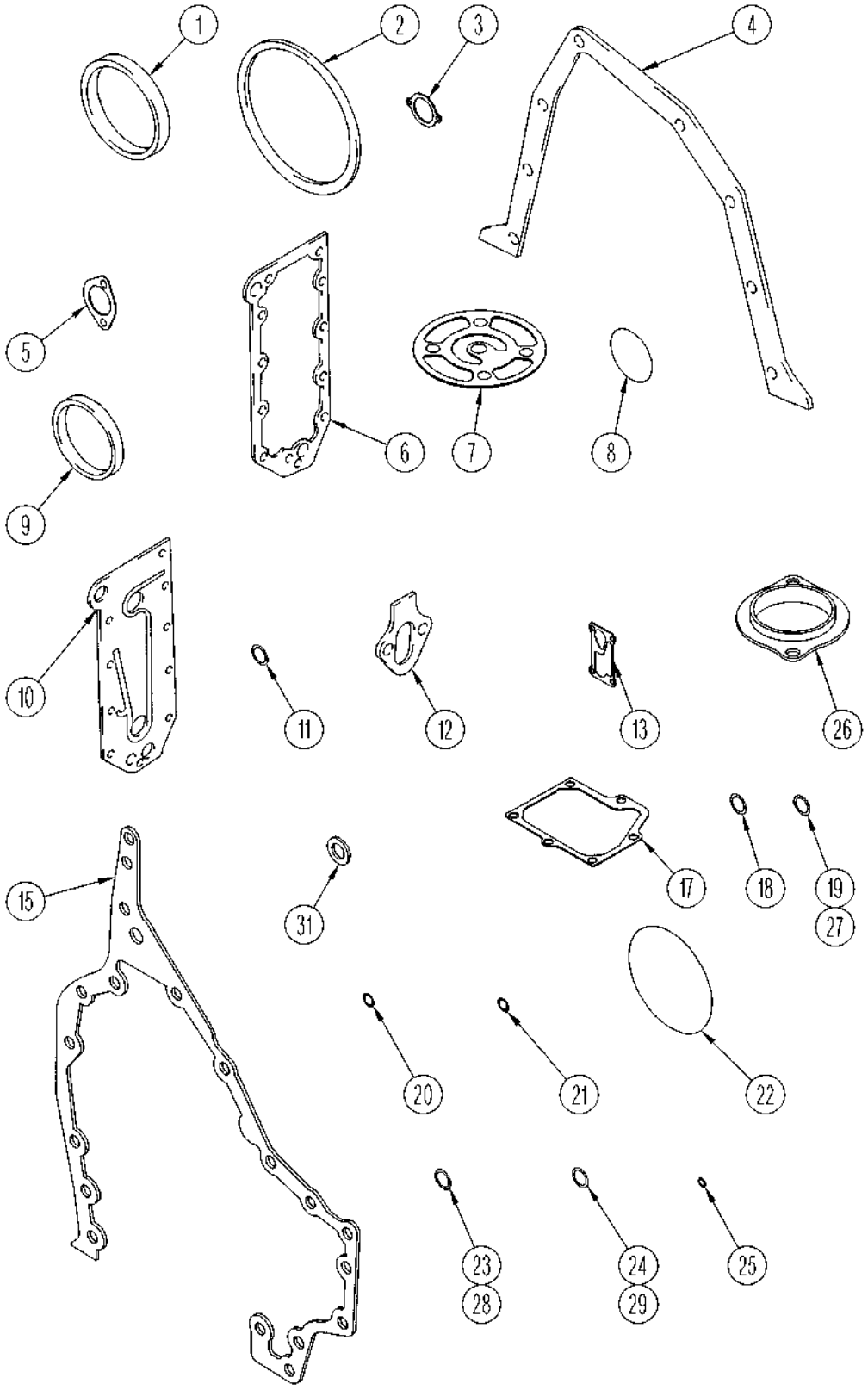

JUEGO DE JUNTAS - BLOQUE DE CILINDRO, MX255 Y MX285
KIT DE VEDAÇÃO - BLOCO DO CILINDRO, MODELOS MX255 E MX285
PAKKINGSET - CILINDERBLOK, MX255 EN MX285
PAKNINGSSÆT - CYLINDERBLOK, MX255 OG MX285

R	N	P.N.	MOD	Q	Description Denominacion	Descrizione Denominação	Description Beschrijving	Bezeichnung Beskrivelse	L.C.
		A77981		1	KIT, GASKET Inc. 1 - 31 EMPAQUE DE JUNTAS	CONFEZIONE, GUARNIZ JOGO DE JUNTAS	JEU JOINTS ETANCHEIT KIT, GASKET	DICHTUNGSSATZ PAKNINGS PAKKE	3740
1	1	**J903475**		1	SEAL Front Cover ANILLO DE CIERRE	ANELLO DI TENUTA ANEL DE VEDACAO	JOINT DICHTINGSRING	DICHTUNG PAKNINGSRING	132A
2	2	**J907177**		6	O-RING JUNTA HERMETICA	ANELLO TOROIDALE O-RING	JOINT THORIQUE O-RING	DICHTRING O-RING	055A
3	3	**J945603**		1	GASKET Water Inlet Mounting JUNTA HERMETICA	GUARNIZIONE JUNTA	JOINT DICHTINGSSTUK	DICHTUNG, FLACH PAKNING	123G
4	4	**J914301**		1	GASKET Rear Cover JUNTA HERMETICA	GUARNIZIONE JUNTA	JOINT DICHTINGSSTUK	DICHTUNG, FLACH PAKNING	123G
5	5	**J914302**		1	GASKET Suction Tube JUNTA HERMETICA	GUARNIZIONE JUNTA	JOINT DICHTINGSSTUK	DICHTUNG, FLACH PAKNING	123G
6	6	**J918174**		1	GASKET Oil Cooler Mounting JUNTA HERMETICA	GUARNIZIONE JUNTA	JOINT DICHTINGSSTUK	DICHTUNG, FLACH PAKNING	123G
7	6	**J921605**		1	GASKET Filter Head JUNTA HERMETICA	GUARNIZIONE JUNTA	JOINT DICHTINGSSTUK	DICHTUNG, FLACH PAKNING	123G
8	3	**J926048**		1	O-RING 66 mm ID JUNTA HERMETICA	ANELLO TOROIDALE O-RING	JOINT THORIQUE O-RING	DICHTRING O-RING	055A
9	7	**J926722**		1	SEAL ANILLO DE CIERRE	ANELLO DI TENUTA ANEL DE VEDACAO	JOINT DICHTINGSRING	DICHTUNG PAKNINGSRING	132A
10	6	**J929011**		1	GASKET Oil Cooler JUNTA HERMETICA	GUARNIZIONE JUNTA	JOINT DICHTINGSSTUK	DICHTUNG, FLACH PAKNING	123G
11	6	**J930911**		1	O-RING 3/4 ID x 1/16 JUNTA HERMETICA	ANELLO TOROIDALE O-RING	JOINT THORIQUE O-RING	DICHTRING O-RING	055A
12	3	**J939258**		1	GASKET Pump Mounting JUNTA HERMETICA	GUARNIZIONE JUNTA	JOINT DICHTINGSSTUK	DICHTUNG, FLACH PAKNING	123G
13	8	**J937367**		1	GASKET JUNTA HERMETICA	GUARNIZIONE JUNTA	JOINT DICHTINGSSTUK	DICHTUNG, FLACH PAKNING	123G
15	1	**J944293**		1	GASKET Gear Housing JUNTA HERMETICA	GUARNIZIONE JUNTA	JOINT DICHTINGSSTUK	DICHTUNG, FLACH PAKNING	123G
17	9	**J944683**		1	GASKET Breather JUNTA HERMETICA	GUARNIZIONE JUNTA	JOINT DICHTINGSSTUK	DICHTUNG, FLACH PAKNING	123G
18	10	**237-8008**		2	O-RING 41/64 ID x 3/32 JUNTA HERMETICA	ANELLO TOROIDALE O-RING	JOINT THORIQUE O-RING	DICHTRING O-RING	055A
19	10	**237-8010**		2	O-RING 3/4 ID x 3/32 JUNTA HERMETICA	ANELLO TOROIDALE ANEL O	JOINT TORIQUE O-RING	O-RING O-RING	7176

(1) See Figure 02-11
(2) See Figures 02-23, 02-26
(3) See Figure 02-23
(4) See Figure 02-24
(5) See Figure 02-17
(6) See Figure 02-16
(7) See Figure 03-12
(8) See Figure 02-20
(9) See Figure 02-21
(10) See Figure 03-04

02-47		p2	11/04

GASKET KIT - CYLINDER BLOCK, MX255 AND MX285
SERIE DI GUARNIZIONI - MONOBLOCCO, MX255 E MX285
KIT DE JOINTS D'ÉTANCHÉITÉ POUR BLOC-CYLINDRES, MX255 ET MX285
DICHTUNGSKIT - ZYLINDERBLOCK DER SERIEN MX255 UND MX285

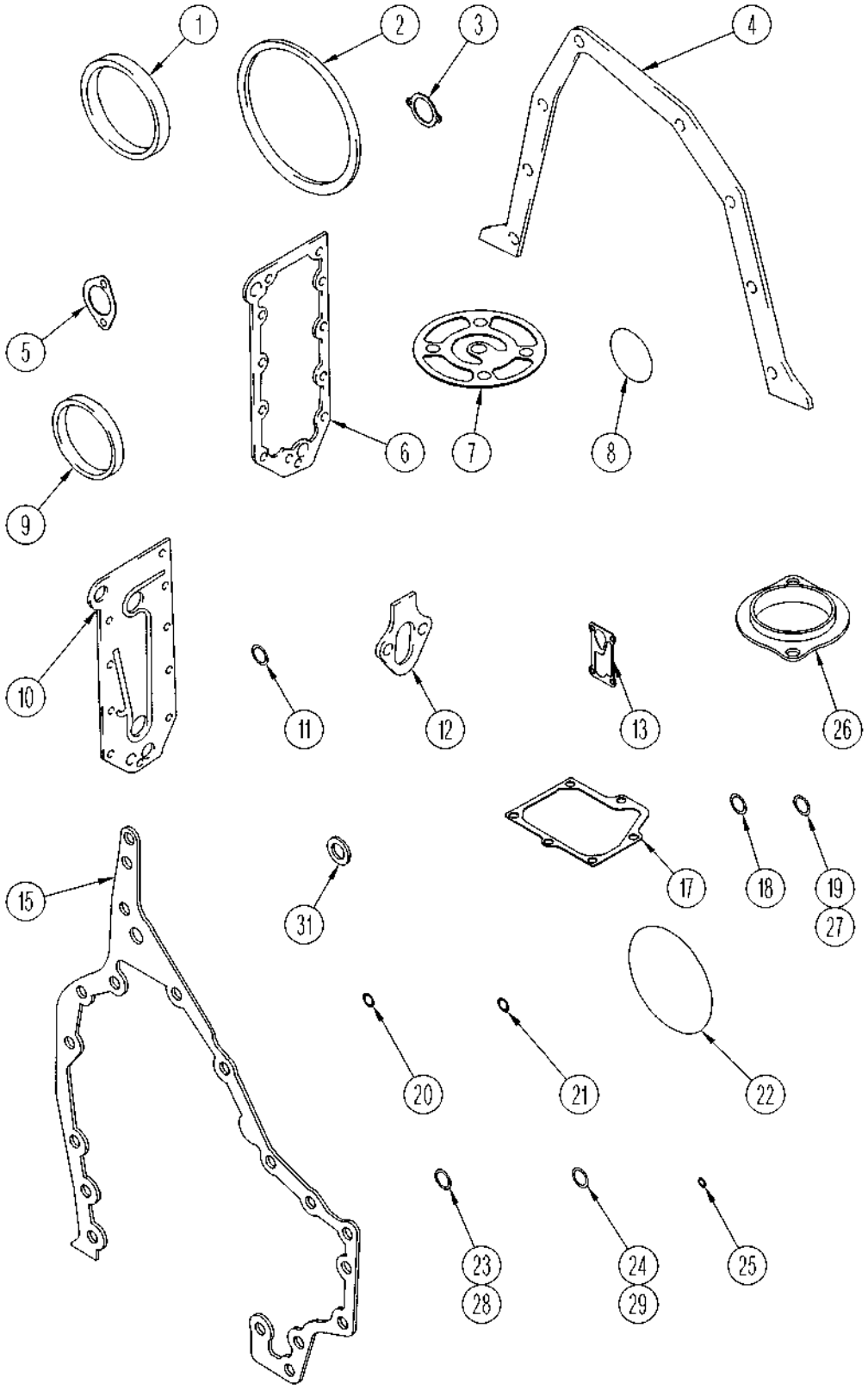

JUEGO DE JUNTAS - BLOQUE DE CILINDRO, MX255 Y MX285
KIT DE VEDAÇÃO - BLOCO DO CILINDRO, MODELOS MX255 E MX285
PAKKINGSET - CILINDERBLOK, MX255 EN MX285
PAKNINGSSÆT - CYLINDERBLOK, MX255 OG MX285

R	N	P.N.	MOD	Q	Description Denominacion	Descrizione Denominação	Description Beschrijving	Bezeichnung Beskrivelse	L.C.
20	1	238-5013		1	O-RING 7/16 ID x 1/16 JUNTA HERMETICA	ANELLO TOROIDALE ANEL O	JOINT TORIQUE O-RING	O-RING O-RING	7176
21	1	238-5111		3	O-RING 7/16 ID x 3/32 JUNTA HERMETICA	ANELLO TOROIDALE ANEL O	JOINT TORIQUE O-RING	O-RING O-RING	7176
22	2	238-5244		1	O-RING 4-1/4 ID x 4-1/2 OD JUNTA HERMETICA	ANELLO TOROIDALE ANEL O	JOINT TORIQUE O-RING	O-RING O-RING	7176
23	3	A77724		1	O-RING JUNTA HERMETICA	ANELLO TOROIDALE O-RING	JOINT THORIQUE O-RING	DICHTRING O-RING	055A
24	4	313246A1		2	O-RING 19 ID x 2,2 mm JUNTA HERMETICA	ANELLO TOROIDALE O-RING	JOINT THORIQUE O-RING	DICHTRING O-RING	055A
25	5	637-62081		9	O-RING 8,1 ID x 1,6 mm JUNTA HERMETICA	ANELLO TOROIDALE ANEL O	JOINT TORIQUE O-RING	O-RING O-RING	7176
26	1	J945603		1	GASKET Water Inlet JUNTA HERMETICA	GUARNIZIONE JUNTA	JOINT DICHTINGSSTUK	DICHTUNG, FLACH PAKNING	123G
27		237-8012		1	O-RING 3/4 OD JUNTA HERMETICA	ANELLO TOROIDALE ANEL O	JOINT TORIQUE O-RING	O-RING O-RING	7176
28		J678912		2	O-RING 11,3 ID x 2,2 mm JUNTA HERMETICA	ANELLO TOROIDALE O-RING	JOINT THORIQUE O-RING	DICHTRING O-RING	055A
29		J330202		2	O-RING 11,3 ID x 2,2 mm JUNTA HERMETICA	ANELLO TOROIDALE O-RING	JOINT THORIQUE O-RING	DICHTRING O-RING	055A
30		J935171		4	WASHER, SEALING 12 x 19 x 1,5 mm JUNTA HERMETICA	ROSETTA DI TENUTA JUNTA HERMETICA	RONDELLE D'ETANCHEI DICHTRING	DICHTSCHEIBE TAETNINGSSKIVE	133R

(1) See Figure 02-20
(2) See Figure 02-10
(3) See Figure 02-16
(4) See Figure 02-23
(5) See Figure 03-04

GASKET KIT - BASIC SERVICE ENGINE, MX210 AND MX230
SERIE DI GUARNIZIONI - MANUTENZIONE DI BASE MOTORE, MX210 E MX230
KIT DE JOINTS D'ÉTANCHÉITÉ DU MOTEUR D'ENTRETIEN STANDARD, MX210 ET MX230
DICHTUNGSKIT - STANDARD-MOTORWARTUNG DER SERIEN MX210 UND MX230

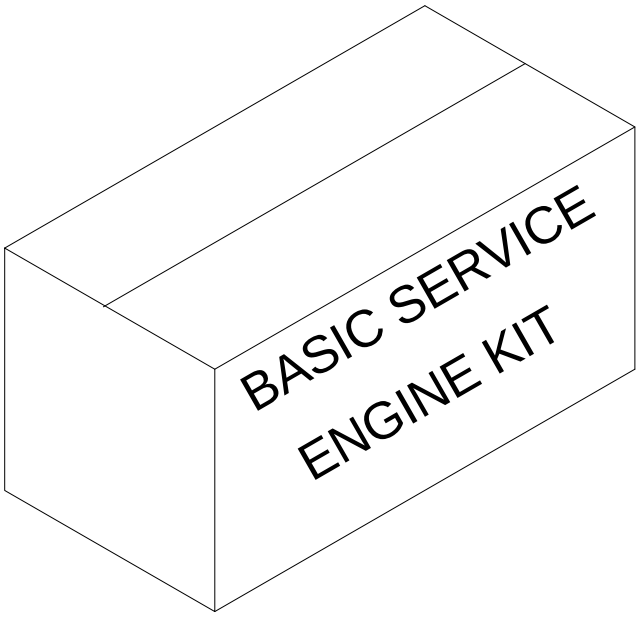

JUEGO DE JUNTAS - MANTENIMIENTO BÁSICO DEL MOTOR, MX210 Y MX230
KIT DE VEDAÇÃO - MANUTENÇÃO BÁSICA DO MOTOR, MODELOS MX210 E MX230
PAKKINGSET - BASISMOTORONDERHOUD, MX210 EN MX230
PAKNINGSSÆT - GRUNDLÆGGENDE SERVICE AF MOTOR, MX210 OG MX230

R	N	P.N.	MOD	Q	Description Denominacion	Descrizione Denominação	Description Beschrijving	Bezeichnung Beskrivelse	L.C.
		A78043		1	GASKET, CYLINDER HEAD Inc. 1 - 26				
						GUARNIZIONE TESTA CI	JOINT DE CULASSE	ZYLINDERKOPFDICHTUI	129G
					JUNTA DE CULATA	JUNTA DA CABECA	CYLINDERKOPDICHTING	TOPPAKNING	
1		222-993		2	COPPER SEAL 3/8 OD	TENUTA IN RAME	JOINT CUIVRE	KUPFERDICHTUNG	Z527
					JUNTA COBRE	JUNTA DE COBRE	COPPER SEAL	KOBBERPAKNING	
2		238-5115		2	O-RING 11/16 ID x 3/32	ANELLO TOROIDALE	JOINT TORIQUE	O-RING	7176
					JUNTA HERMETICA	ANEL O	O-RING	O-RING	
3		238-5120		2	O-RING 1 ID x 3/32	ANELLO TOROIDALE	JOINT TORIQUE	O-RING	7176
					JUNTA HERMETICA	ANEL O	O-RING	O-RING	
4		238-7115		2	O-RING 11/16 ID x 3/32	ANELLO TOROIDALE	JOINT TORIQUE	O-RING	7176
					JUNTA HERMETICA	ANEL O	O-RING	O-RING	
5		933967R1		2	WASHER 10 mm ID x 2,5 mm				
						ROSETTA PIANA	RONDELLE	SCHEIBE	9720
					ARANDELA	ANILHA	SLUITRING	FLADSKIVE	
6		J937706		1	GASKET Oil Drain	GUARNIZIONE	JOINT	DICHTUNG, FLACH	123G
					JUNTA HERMETICA	JUNTA	DICHTINGSSTUK	PAKNING	
7		J902425		2	WASHER	ROSETTA PIANA	RONDELLE	BEILAGSCHEIBE	131R
					ARANDELA	ANILHA	SLUITRING	FLADSKIVE	
8		J903380		6	SEAL	ANELLO DI TENUTA	JOINT	DICHTUNG	132A
					ANILLO DE CIERRE	ANEL DE VEDACAO	DICHTINGSRING	PAKNINGSRING	
9		J903475		1	SEAL	ANELLO DI TENUTA	JOINT	DICHTUNG	132A
					ANILLO DE CIERRE	ANEL DE VEDACAO	DICHTINGSRING	PAKNINGSRING	
10		J909886		6	SEAL	ANELLO DI TENUTA	JOINT	DICHTUNG	132A
					ANILLO DE CIERRE	ANEL DE VEDACAO	DICHTINGSRING	PAKNINGSRING	
11		J910517		1	O-RING	ANELLO TOROIDALE	JOINT THORIQUE	DICHTRING	055A
					JUNTA HERMETICA	O-RING	O-RING	O-RING	
12		J755843		1	GASKET	GUARNIZIONE	JOINT	DICHTUNG, FLACH	123G
					JUNTA HERMETICA	JUNTA	DICHTINGSSTUK	PAKNING	
13		J912473		1	O-RING	ANELLO TOROIDALE	JOINT THORIQUE	DICHTRING	055A
					JUNTA HERMETICA	O-RING	O-RING	O-RING	
14		J936993		1	GASKET, MANIFOLD	GUARNIZIONE COLLETT	JOINT DE COLLECTEUR	KRÜMMERDICHTUNG	125G
					JUNTA COLECTOR	JUNTA COLECTOR	DICHTING, SPRUITSTUK	MINIFOLD PAKNING	
15		J916284		1	O-RING	ANELLO TOROIDALE	JOINT THORIQUE	DICHTRING	055A
					JUNTA HERMETICA	O-RING	O-RING	O-RING	
16		J918188		2	WASHER	ROSETTA PIANA	RONDELLE	BEILAGSCHEIBE	131R
					ARANDELA	ANILHA	SLUITRING	FLADSKIVE	
17		J918190		2	WASHER, SEALING	ROSETTA DI TENUTA	RONDELLE D'ETANCHEI	DICHTSCHEIBE	133R
					JUNTA HERMETICA	JUNTA HERMETICA	DICHTRING	TAETNINGSSKIVE	
18		J918192		4	RING, PACKING	ANELLO, DI RIEMPIM.	RONDELLE JOINT	DICHTRING	P614
					ARANDELA JUNTA	ARANDELA JUNTA	RING, PACKING	PAKNINGSRING	
19		J918779		1	GASKET	GUARNIZIONE	JOINT	DICHTUNG, FLACH	123G
					JUNTA HERMETICA	JUNTA	DICHTINGSSTUK	PAKNING	
20		J990881		2	FITTING	RACCORDO	RACCORD	ANSCHLUSSSTÜCK	3300
					CONEXION	CONEXAO	FITTING	FITTING	
21		J923261		6	WASHER	ROSETTA PIANA	RONDELLE	BEILAGSCHEIBE	131R
					ARANDELA	ANILHA	SLUITRING	FLADSKIVE	
22		J924605		1	SEAL	ANELLO DI TENUTA	JOINT	DICHTUNG	132A
					ANILLO DE CIERRE	ANEL DE VEDACAO	DICHTINGSRING	PAKNINGSRING	

GASKET KIT - BASIC SERVICE ENGINE, MX210 AND MX230
SERIE DI GUARNIZIONI - MANUTENZIONE DI BASE MOTORE, MX210 E MX230
KIT DE JOINTS D'ÉTANCHÉITÉ DU MOTEUR D'ENTRETIEN STANDARD, MX210 ET MX230
DICHTUNGSKIT - STANDARD-MOTORWARTUNG DER SERIEN MX210 UND MX230

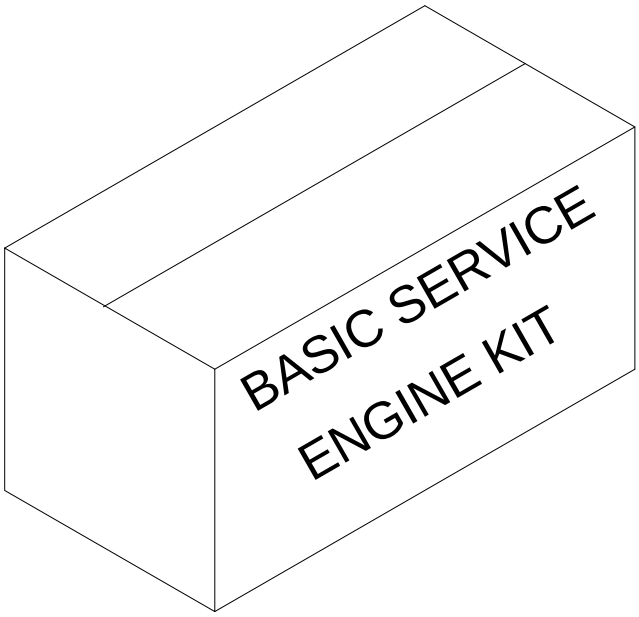

JUEGO DE JUNTAS - MANTENIMIENTO BÁSICO DEL MOTOR, MX210 Y MX230
KIT DE VEDAÇÃO - MANUTENÇÃO BÁSICA DO MOTOR, MODELOS MX210 E MX230
PAKKINGSET - BASISMOTORONDERHOUD, MX210 EN MX230
PAKNINGSSÆT - GRUNDLÆGGENDE SERVICE AF MOTOR, MX210 OG MX230

R	N	P.N.	MOD	Q	Description Denominacion	Descrizione Denominação	Description Beschrijving	Bezeichnung Beskrivelse	L.C.
23		J939258		1	GASKET JUNTA HERMETICA	GUARNIZIONE JUNTA	JOINT DICHTINGSSTUK	DICHTUNG, FLACH PAKNING	123G
24		238-7018		1	O-RING 3/4 ID x 1/16 JUNTA HERMETICA	ANELLO TOROIDALE ANEL O	JOINT TORIQUE O-RING	O-RING O-RING	7176
25		J932063		6	GASKET, MANIFOLD JUNTA COLECTOR	GUARNIZIONE COLLETT JUNTA COLECTOR	JOINT DE COLLECTEUR DICHTING, SPRUITSTUK	KRÜMMERDICHTUNG MINIFOLD PAKNING	125G
26		J935171		2	WASHER, SEALING 12 x 19 x 1,5 mm JUNTA HERMETICA	ROSETTA DI TENUTA JUNTA HERMETICA	RONDELLE D'ETANCHEI DICHTRING	DICHTSCHEIBE TAETNINGSSKIVE	133R

GASKET KIT - BASIC SERVICE ENGINE, MX255 AND MX285
SERIE DI GUARNIZIONI - MANUTENZIONE DI BASE MOTORE, MX255 E MX285
KIT DE JOINT D'ÉTANCHÉITÉ DU MOTEUR D'ENTRETIEN STANDARD, MX255 ET MX285
DICHTUNGSKIT - STANDARD-MOTORWARTUNG DER SERIEN MX255 UND MX285

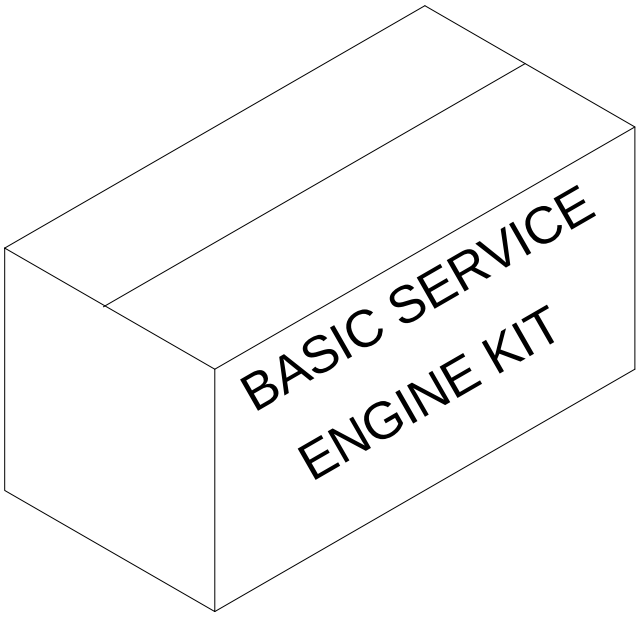

JUEGO DE JUNTAS - MANTENIMIENTO BÁSICO DEL MOTOR, MX255 Y MX285
KIT DE VEDAÇÃO - MANUTENÇÃO BÁSICA DO MOTOR, MODELOS MX255 E MX285
PAKKINGSET - BASISMOTORONDERHOUD, MX255 EN MX285
PAKNINGSSÆT - GRUNDLÆGGENDE SERVICE AF MOTOR, MX255 OG MX285

R	N	P.N.	MOD	Q	Description Denominacion	Descrizione Denominação	Description Beschrijving	Bezeichnung Beskrivelse	L.C.
		A78003		1	KIT, GASKET Inc. 1 - 24 EMPAQUE DE JUNTAS	CONFEZIONE, GUARNIZ JOGO DE JUNTAS	JEU JOINTS ETANCHEIT KIT, GASKET	DICHTUNGSSATZ PAKNINGS PAKKE	3740
1		222-993		2	COPPER SEAL 3/8 OD JUNTA COBRE	TENUTA IN RAME JUNTA DE COBRE	JOINT CUIVRE COPPER SEAL	KUPFERDICHTUNG KOBBERPAKNING	Z527
2		238-5013		2	O-RING 7/16 ID x 1/16 JUNTA HERMETICA	ANELLO TOROIDALE ANEL O	JOINT TORIQUE O-RING	O-RING O-RING	7176
3		238-7018		1	O-RING 3/4 ID x 1/16 JUNTA HERMETICA	ANELLO TOROIDALE ANEL O	JOINT TORIQUE O-RING	O-RING O-RING	7176
4		238-7210		6	O-RING 3/4 ID x 9/64 JUNTA HERMETICA	ANELLO TOROIDALE ANEL O	JOINT TORIQUE O-RING	O-RING O-RING	7176
5		313262A1		2	SEAL 9,2 mm ID x 1,7 mm ANILLO DE CIERRE	ANELLO DI TENUTA ANEL DE VEDACAO	JOINT DICHTINGSRING	DICHTUNG PAKNINGSRING	132A
6		J937706		1	GASKET Oil Drain JUNTA HERMETICA	GUARNIZIONE JUNTA	JOINT DICHTINGSSTUK	DICHTUNG, FLACH PAKNING	123G
7		J330081		1	O-RING JUNTA HERMETICA	ANELLO TOROIDALE O-RING	JOINT THORIQUE O-RING	DICHTRING O-RING	055A
8		J330202		2	O-RING 11,3 ID x 2,2 mm JUNTA HERMETICA	ANELLO TOROIDALE O-RING	JOINT THORIQUE O-RING	DICHTRING O-RING	055A
9		J330478		2	O-RING JUNTA HERMETICA	ANELLO TOROIDALE O-RING	JOINT THORIQUE O-RING	DICHTRING O-RING	055A
10		J678603		2	O-RING 9,3 mm ID x 2,2 mr JUNTA HERMETICA	ANELLO TOROIDALE O-RING	JOINT THORIQUE O-RING	DICHTRING O-RING	055A
11		J678912		2	O-RING 11,3 ID x 2,2 mm JUNTA HERMETICA	ANELLO TOROIDALE O-RING	JOINT THORIQUE O-RING	DICHTRING O-RING	055A
12		J867043		6	SEAL ANILLO DE CIERRE	ANELLO DI TENUTA ANEL DE VEDACAO	JOINT DICHTINGSRING	DICHTUNG PAKNINGSRING	132A
13		J883284		1	SEAL ANILLO DE CIERRE	ANELLO DI TENUTA ANEL DE VEDACAO	JOINT DICHTINGSRING	DICHTUNG PAKNINGSRING	132A
14		J937142		6	SEAL 7 mm ANILLO DE CIERRE	ANELLO DI TENUTA ANEL DE VEDACAO	JOINT DICHTINGSRING	DICHTUNG PAKNINGSRING	132A
15		J911941		1	GASKET Turbocharger Mounting JUNTA HERMETICA	GUARNIZIONE JUNTA	JOINT DICHTINGSSTUK	DICHTUNG, FLACH PAKNING	123G
16		J912473		1	O-RING JUNTA HERMETICA	ANELLO TOROIDALE O-RING	JOINT THORIQUE O-RING	DICHTRING O-RING	055A
17		J917892		1	GASKET JUNTA HERMETICA	GUARNIZIONE JUNTA	JOINT DICHTINGSSTUK	DICHTUNG, FLACH PAKNING	123G
18		J919369		1	GASKET JUNTA HERMETICA	GUARNIZIONE JUNTA	JOINT DICHTINGSSTUK	DICHTUNG, FLACH PAKNING	123G
19		J939258		1	GASKET JUNTA HERMETICA	GUARNIZIONE JUNTA	JOINT DICHTINGSSTUK	DICHTUNG, FLACH PAKNING	123G
20		J935171		4	WASHER, SEALING 12 x 19 x 1,5 mm JUNTA HERMETICA	ROSETTA DI TENUTA JUNTA HERMETICA	RONDELLE D'ETANCHEI DICHTRING	DICHTSCHEIBE TAETNINGSSKIVE	133R
21		J937479		6	GASKET, MANIFOLD Exhaust Manifold JUNTA COLECTOR	GUARNIZIONE COLLETT JUNTA COLECTOR	JOINT DE COLLECTEUR DICHTING, SPRUITSTUK	KRÜMMERDICHTUNG MINIFOLD PAKNING	125G
22		J944646		1	GASKET, MANIFOLD JUNTA COLECTOR	GUARNIZIONE COLLETT JUNTA COLECTOR	JOINT DE COLLECTEUR DICHTING, SPRUITSTUK	KRÜMMERDICHTUNG MINIFOLD PAKNING	125G

GASKET KIT - BASIC SERVICE ENGINE, MX255 AND MX285
SERIE DI GUARNIZIONI - MANUTENZIONE DI BASE MOTORE, MX255 E MX285
KIT DE JOINT D'ÉTANCHÉITÉ DU MOTEUR D'ENTRETIEN STANDARD, MX255 ET MX285
DICHTUNGSKIT - STANDARD-MOTORWARTUNG DER SERIEN MX255 UND MX285

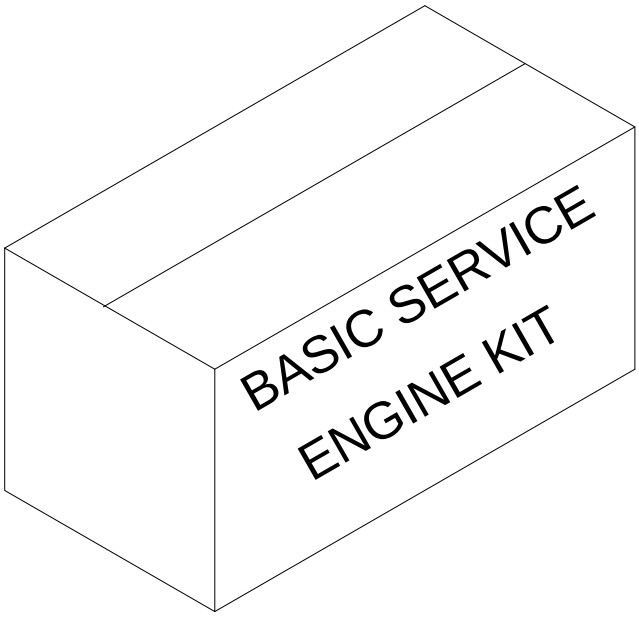

JUEGO DE JUNTAS - MANTENIMIENTO BÁSICO DEL MOTOR, MX255 Y MX285
KIT DE VEDAÇÃO - MANUTENÇÃO BÁSICA DO MOTOR, MODELOS MX255 E MX285
PAKKINGSET - BASISMOTORONDERHOUD, MX255 EN MX285
PAKNINGSSÆT - GRUNDLÆGGENDE SERVICE AF MOTOR, MX255 OG MX285

R	N	P.N.	MOD	Q	Description Denominacion	Descrizione Denominação	Description Beschrijving	Bezeichnung Beskrivelse	L.C.
23		J944647		1	GASKET JUNTA HERMETICA	GUARNIZIONE JUNTA	JOINT DICHTINGSSTUK	DICHTUNG, FLACH PAKNING	123G
24		J944683		1	GASKET Breather JUNTA HERMETICA	GUARNIZIONE JUNTA	JOINT DICHTINGSSTUK	DICHTUNG, FLACH PAKNING	123G

SECTION INDEX

03-01	FUEL INJECTION SYSTEM, MX210 AND MX230
03-02	FUEL INJECTION SYSTEM, MX255 AND MX285
03-03	ANEROID AND WASTEGATE SYSTEM, MX210 AND MX230
03-04	FUEL FILTER - PUMP, TRANSFER, MX210 AND MX230
03-05	PUMP, FUEL TRANSFER, MX255 AND MX285
03-06	FUEL FILTER AND CONNECTIONS, MX255 AND MX285
03-07	FUEL INJECTION - PUMP AND DRIVE, MX210 AND MX230
03-08	FUEL INJECTION PUMP, MX255 AND MX285
03-09	FUEL INJECTION PUMP, MX255 AND MX285
03-10	FUEL INJECTION PUMP, MX255 AND MX285
03-11	FUEL INJECTION PUMP, MX255 AND MX285
03-12	FUEL INJECTION PUMP, MX255 AND MX285
03-13	FUEL INJECTION PUMP - GEAR AND MOUNTING BRACKETS, MX255 AND MX285
03-14	FUEL INJECTION - NOZZLE, MX210 AND MX230
03-15	FUEL INJECTION - NOZZLE , MX255 AND MX285
03-16	HAND THROTTLE, MX210 AND MX230
03-17	HAND THROTTLE, MX255 AND MX285
03-18	FOOT THROTTLE, MX210 AND MX230
03-19	FOOT THROTTLE, MX255 AND MX285
03-20	FUEL TANKS
03-21	FUEL LINES WITH INLINE FILTER, MX210 AND MX230
03-22	FUEL LINES WITH SEPARATOR FILTER, MX210 AND MX230
03-23	FUEL LINES WITH INLINE FILTER, MX255 AND MX285
03-24	FUEL LINES WITH SEPARATOR FILTER, MX255 AND MX285
03-25	FUEL SEPARATOR FILTER

FUEL INJECTION SYSTEM, MX210 AND MX230
IMPIANTO DI INIEZIONE DEL COMBUSTIBILE, MX210 E MX230
CIRCUIT D'INJECTION DE CARBURANT, MX210 ET MX230
KRAFTSTOFF-EINSPRITZSYSTEM DER SERIEN MX210 UND MX230

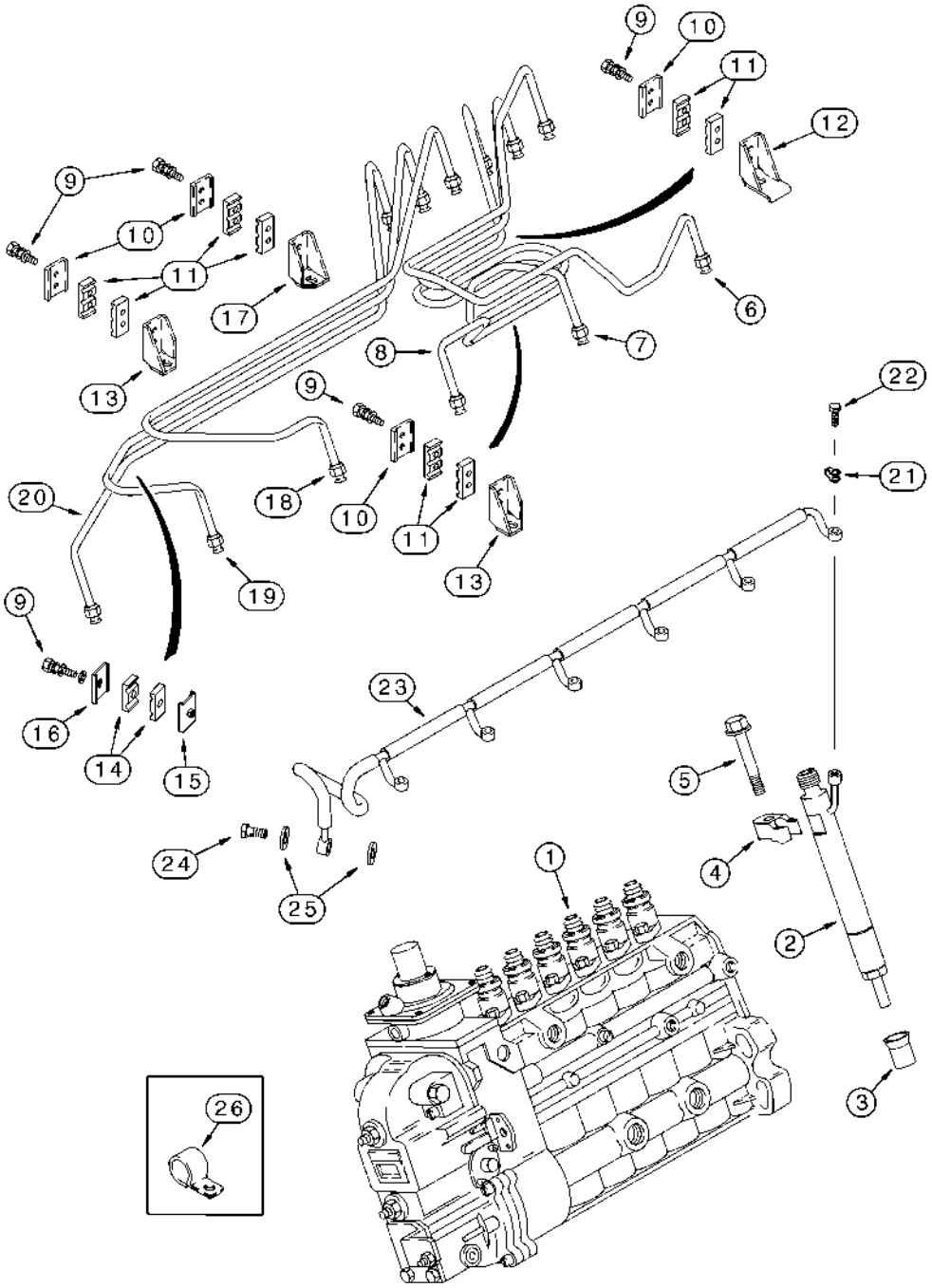

SISTEMA DE INYECCIÓN DEL COMBUSTIBLE, MX210 Y MX230
SISTEMA DE INJECÇÃO DE COMBUSTÍVEL, MODELOS MX210 E MX230
BRANDSTOFINJECTIESYSTEEM, MX210 EN MX230
BRÆNDSTOFINDSPRØJTNINGSSYSTEM, MX210 OG MX230

R	N	P.N.	MOD	Q	Description Denominacion	Descrizione Denominação	Description Beschrijving	Bezeichnung Beskrivelse	L.C.
1	1, 2	J938383		1	PUMP, FUEL INJECTION BOMBA DE INYECCION	POMPA INIEZIONE BOMBA DE INJECCAO	POMPE INJECTION INJECTIEPOMP	EINSPRITZPUMPE INDSPROEJTNINGSPUM	P895
1	3, 2	86994167		1	PUMP, FUEL INJECTION BOMBA DE INYECCION	POMPA INIEZIONE BOMBA DE INJECCAO	POMPE INJECTION INJECTIEPOMP	EINSPRITZPUMPE INDSPROEJTNINGSPUM	P895
2	1, 4	J939837		6	INJECTOR ASSY. INYECTOR (CONJUNTO)	INIETTORE, COMPLESS INJETOR CONJUNTO	INJECTEUR (ASSEMBLE INJECTOR ASSY.	DUESE (KPLT.) INJECTOR ASSY.	P497
2	3, 4	87400105		6	INJECTOR ASSY. INYECTOR (CONJUNTO)	INIETTORE, COMPLESS INJETOR CONJUNTO	INJECTEUR (ASSEMBLE INJECTOR ASSY.	DUESE (KPLT.) INJECTOR ASSY.	P497
3		J909886		6	SEAL ANILLO DE CIERRE	ANELLO DI TENUTA ANEL DE VEDACAO	JOINT DICHTINGSRING	DICHTUNG PAKNINGSRING	132A
4		J910279		6	CLAMP GRAPON	MORSETTO BRACADEIRA	CRAMPON CLAMP	KRAMPE CLAMP	Z458
5		845-8080		6	SCREW M8 x 80 TORNILLO	VITE PARAFUSO	VIS SCHROEF	SCHRAUBE SKRUE	7450
6		J930391		1	PIPE INJECTION No. 1 MANGUERA INJECCION	TUBO, INIEZIONE TUBO INJECAO	TUBE D'INJECTION PIPE INJECTION	EINSPRITZLEITUNG PIPE INJECTION	Z050
7		J930392		1	PIPE INJECTION No. 2 MANGUERA INJECCION	TUBO, INIEZIONE TUBO INJECAO	TUBE D'INJECTION PIPE INJECTION	EINSPRITZLEITUNG PIPE INJECTION	Z050
8		J930393		1	PIPE INJECTION No. 3 MANGUERA INJECCION	TUBO, INIEZIONE TUBO INJECAO	TUBE D'INJECTION PIPE INJECTION	EINSPRITZLEITUNG PIPE INJECTION	Z050
9		J920854		9	BOLT M5 x 20 TORNILLO	BULLONE PARAFUSO	BOULON BOUT	SCHAUBENBOLZEN SKRUE	140B
10		J991275		4	BRACE TENSOR	MENARUOLA TENSOR	JAMBE-DE-FORCE BRACE	STREBE BRACE	0990
11		J917747		8	CLAMP BORNE	MORSETTO BORNE	BRIDE KLEM	KLEMME SPÆNDEBÅND	120M
12		J919622		1	BRACE TENSOR	MENARUOLA TENSOR	JAMBE-DE-FORCE BRACE	STREBE BRACE	0990
13		J282942		2	BRACKET PIEZA DE SOPORTE	STAFFA BRACADEIRA	PATTE FIXATION STEUNBEUGEL	HALTERUNG BESLAG	225S
14		J917746		2	CLAMP BORNE	MORSETTO BORNE	BRIDE KLEM	KLEMME SPÆNDEBÅND	120M
15		J991277		1	BRACE TENSOR	MENARUOLA TENSOR	JAMBE-DE-FORCE BRACE	STREBE BRACE	0990
16		J991276		1	BRACE TENSOR	MENARUOLA TENSOR	JAMBE-DE-FORCE BRACE	STREBE BRACE	0990
17		J282942		1	BRACKET PIEZA DE SOPORTE	STAFFA BRACADEIRA	PATTE FIXATION STEUNBEUGEL	HALTERUNG BESLAG	225S
18		J930394		1	PIPE INJECTION No. 4 MANGUERA INJECCION	TUBO, INIEZIONE TUBO INJECAO	TUBE D'INJECTION PIPE INJECTION	EINSPRITZLEITUNG PIPE INJECTION	Z050
19		J930395		1	PIPE INJECTION No. 5 MANGUERA INJECCION	TUBO, INIEZIONE TUBO INJECAO	TUBE D'INJECTION PIPE INJECTION	EINSPRITZLEITUNG PIPE INJECTION	Z050
20		J930396		1	PIPE INJECTION No. 6 MANGUERA INJECCION	TUBO, INIEZIONE TUBO INJECAO	TUBE D'INJECTION PIPE INJECTION	EINSPRITZLEITUNG PIPE INJECTION	Z050

(1) MX210
(2) See Figure 03-07
(3) MX230
(4) See Figure 03-14

FUEL INJECTION SYSTEM, MX210 AND MX230
IMPIANTO DI INIEZIONE DEL COMBUSTIBILE, MX210 E MX230
CIRCUIT D'INJECTION DE CARBURANT, MX210 ET MX230
KRAFTSTOFF-EINSPRITZSYSTEM DER SERIEN MX210 UND MX230

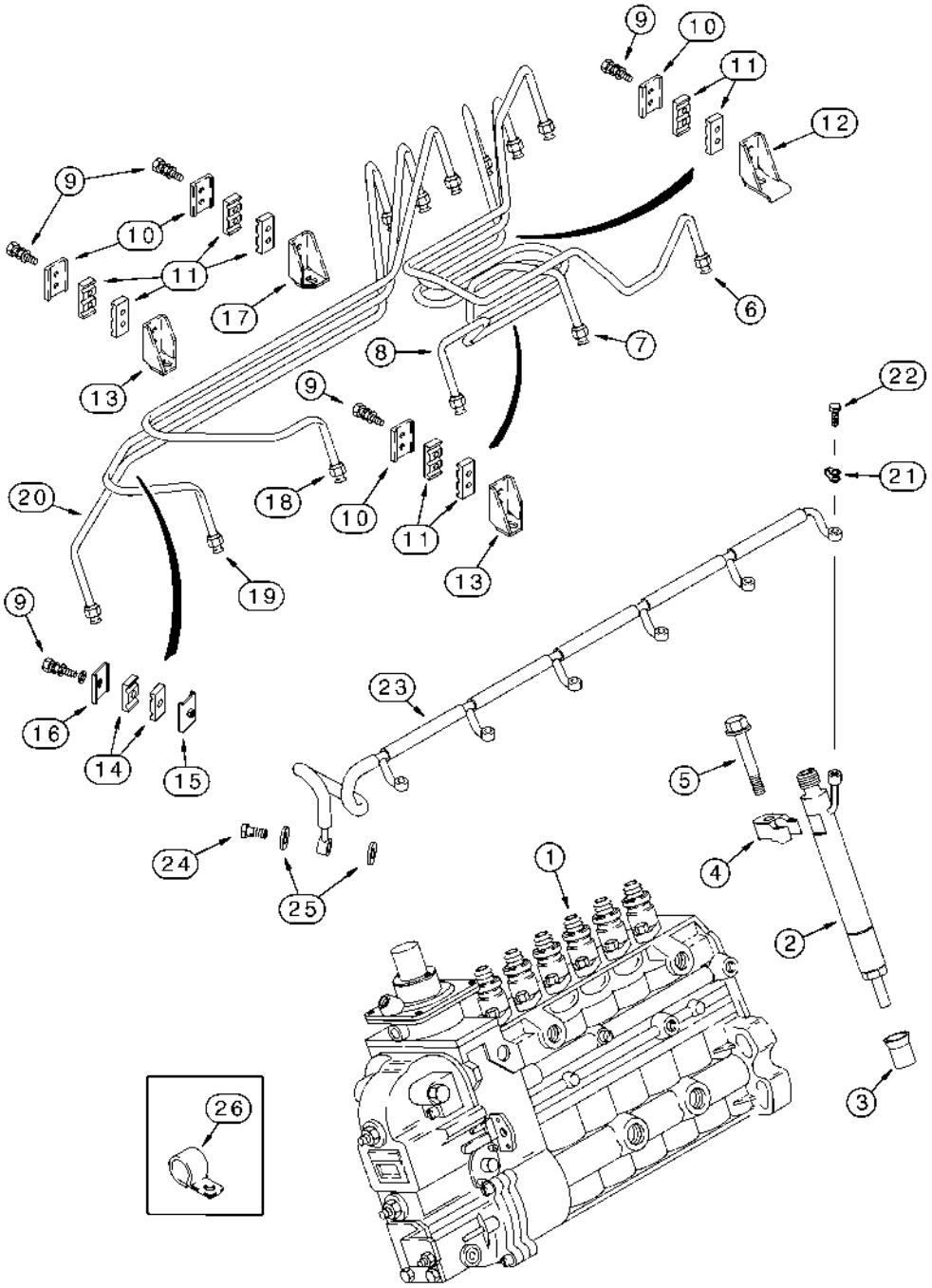

SISTEMA DE INYECCIÓN DEL COMBUSTIBLE, MX210 Y MX230
SISTEMA DE INJECÇÃO DE COMBUSTÍVEL, MODELOS MX210 E MX230
BRANDSTOFINJECTIESYSTEEM, MX210 EN MX230
BRÆNDSTOFINDSPRØJTNINGSSYSTEM, MX210 OG MX230

R	N	P.N.	MOD	Q	Description Denominacion	Descrizione Denominação	Description Beschrijving	Bezeichnung Beskrivelse	L.C.
21		J903380		6	SEAL ANILLO DE CIERRE	ANELLO DI TENUTA ANEL DE VEDACAO	JOINT DICHTINGSRING	DICHTUNG PAKNINGSRING	132A
22		J905307		6	SCREW TORNILLO	VITE PARAFUSO	VIS SCHROEF	SCHRAUBE SKRUE	040V
23		J920595		1	MANIFOLD COLECTOR	COLLETTORE COLECTOR	COLLECTEUR MANIFOLD	KRÜMMER VERDEELSTUK	198C
24		J924726		1	VALVE VALVULA	VALVOLA VALVULA	SOUPAPE VALVE	VENTIL VALVE	9620
25		J918188		2	WASHER ARANDELA	ROSETTA PIANA ANILHA	RONDELLE SLUITRING	BEILAGSCHEIBE FLADSKIVE	131R
26		515-2363		2	CLAMP 1/4 ID COLLAR	MORSETTO BRACADEIRA	COLLIER CLAMP	SCHELLE CLAMP	1640

03-02		p1	12/02

FUEL INJECTION SYSTEM, MX255 AND MX285
IMPIANTO DI INIEZIONE DEL COMBUSTIBILE, MX255 E MX285
CIRCUIT D'INJECTION DE CARBURANT, MX255 ET MX285
KRAFTSTOFF-EINSPRITZSYSTEM DER SERIEN MX255 UND MX285

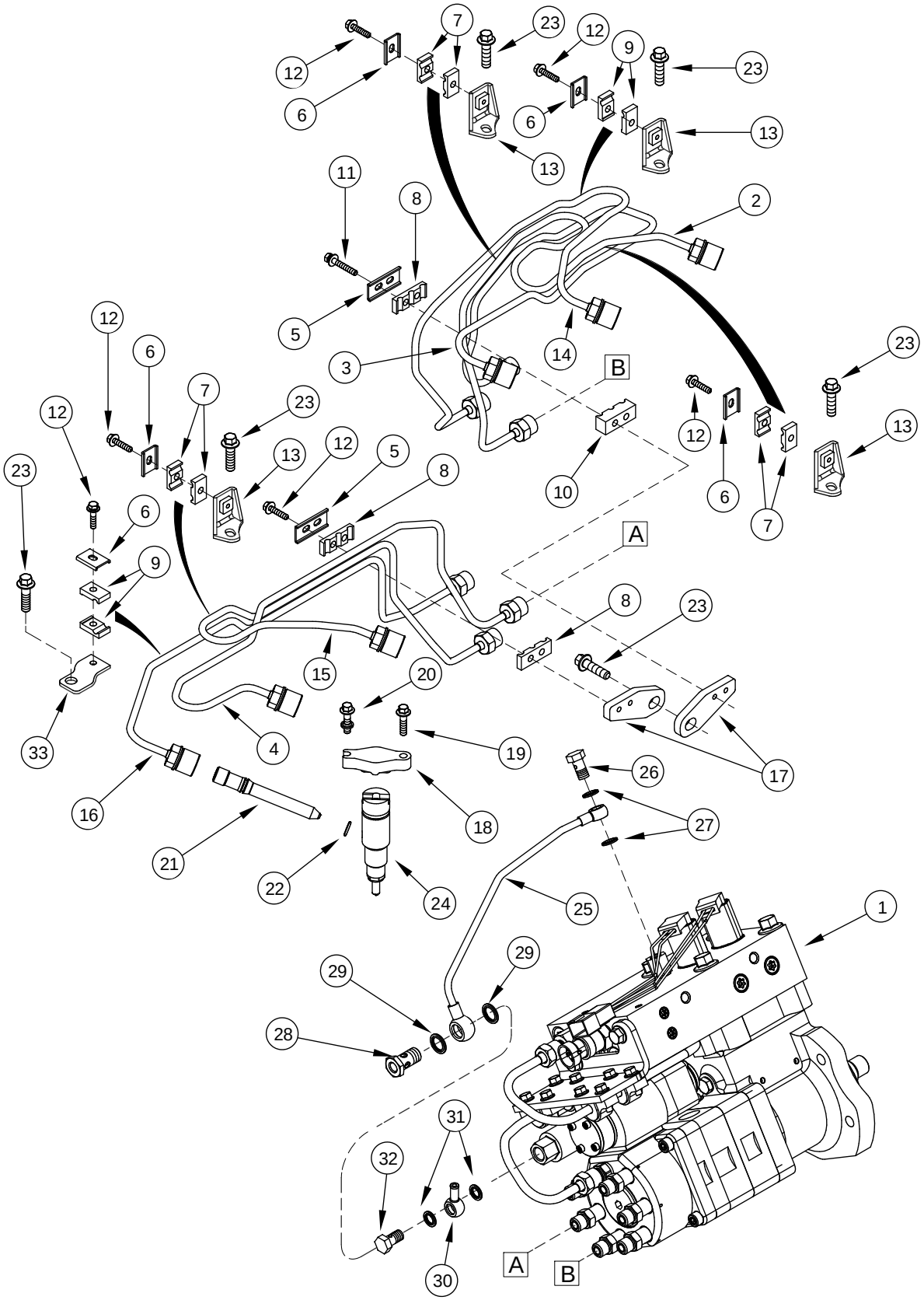

SISTEMA DE INYECCIÓN DEL COMBUSTIBLE, MX255 Y MX285
SISTEMA DE INJECÇÃO DE COMBUSTÍVEL, MODELOS MX255 E MX285
BRANDSTOFINJECTIESYSTEEM, MX255 EN MX285
BRÆNDSTOFINDSPRØJTNINGSSYSTEM, MX255 OG MX285

R	N	P.N.	MOD	Q	Description Denominacion	Descrizione Denominação	Description Beschrijving	Bezeichnung Beskrivelse	L.C.
1	1	J4076442		1	PUMP, FUEL INJECTION Inc. 25 - 29 BOMBA DE INYECCION	POMPA INIEZIONE BOMBA DE INJECCAO	POMPE INJECTION INJECTIEPOMP	KRAFTSTOFFEINSPRITZ INDSPROEJTNINGSPUM	158P
2		J944686		1	TUBE No. 1 TUBO	TUBETTO TUBO	TUBE BUISJE	SCHLAUCH RØR	195T
3		J944690		1	TUBE No. 3 TUBO	TUBETTO TUBO	TUBE BUISJE	SCHLAUCH RØR	195T
4		J944694		1	TUBE No. 5 TUBO	TUBETTO TUBO	TUBE BUISJE	SCHLAUCH RØR	195T
5		J904519		2	SUPPORT SOPORTE	SUPPORTO SUPORTE	SUPPORT STEUN	STÜTZE BESLAG	300S
6		J904711		5	SUPPORT SOPORTE	SUPPORTO SUPORTE	SUPPORT STEUN	STÜTZE BESLAG	300S
7		J917746		6	CLAMP BORNE	MORSETTO BORNE	BRIDE KLEM	KLEMME SPÆNDEBÅND	120M
8		J917747		3	CLAMP BORNE	MORSETTO BORNE	BRIDE KLEM	KLEMME SPÆNDEBÅND	120M
9		J919359		4	CLAMP BORNE	MORSETTO BORNE	BRIDE KLEM	KLEMME SPÆNDEBÅND	120M
10		J944699		1	CLAMP BORNE	MORSETTO BORNE	BRIDE KLEM	KLEMME SPÆNDEBÅND	120M
11		J944717		1	SCREW TORNILLO	VITE PARAFUSO	VIS SCHROEF	SCHRAUBE SKRUE	040V
12		J920854		7	BOLT M5 x 20 TORNILLO	BULLONE PARAFUSO	BOULON BOUT	SCHAUBENBOLZEN SKRUE	140B
13		J930688		4	SUPPORT SOPORTE	SUPPORTO SUPORTE	SUPPORT STEUN	STÜTZE BESLAG	300S
14		J944688		1	TUBE No. 2 TUBO	TUBETTO TUBO	TUBE BUISJE	SCHLAUCH RØR	195T
15		J944692		1	TUBE No. 4 TUBO	TUBETTO TUBO	TUBE BUISJE	SCHLAUCH RØR	195T
16		J944696		1	TUBE No. 6 TUBO	TUBETTO TUBO	TUBE BUISJE	SCHLAUCH RØR	195T
17		J944698		2	SUPPORT SOPORTE	SUPPORTO SUPORTE	SUPPORT STEUN	STÜTZE BESLAG	300S
18		J940639		6	CLAMP BORNE	MORSETTO BORNE	BRIDE KLEM	KLEMME SPÆNDEBÅND	120M
19		844-6025		6	SCREW M6 x 25; 8,8 TORNILLO	VITE PARAFUSO	VIS SCHROEF	SCHRAUBE SKRUE	P136
20		J940817		6	SCREW TORNILLO	VITE PARAFUSO	VIS SCHROEF	SCHRAUBE SKRUE	040V
21		J944833		6	CONNECTOR, HYD. RACOR	RACCORDO IDRAULICO CONECTOR	RACCORD VERBINDING	STUTZEN FORSKRUNING	020R
22		J867043		6	SEAL ANILLO DE CIERRE	ANELLO DI TENUTA ANEL DE VEDACAO	JOINT DICHTINGSRING	DICHTUNG PAKNINGSRING	132A
23		844-8030		6	SCREW M8 x 30; 8.8 TORNILLO	VITE PARAFUSO	VIS SCHROEF	SCHRAUBE SKRUE	040V

(1) See Figure 03-08

FUEL INJECTION SYSTEM, MX255 AND MX285
IMPIANTO DI INIEZIONE DEL COMBUSTIBILE, MX255 E MX285
CIRCUIT D'INJECTION DE CARBURANT, MX255 ET MX285
KRAFTSTOFF-EINSPRITZSYSTEM DER SERIEN MX255 UND MX285

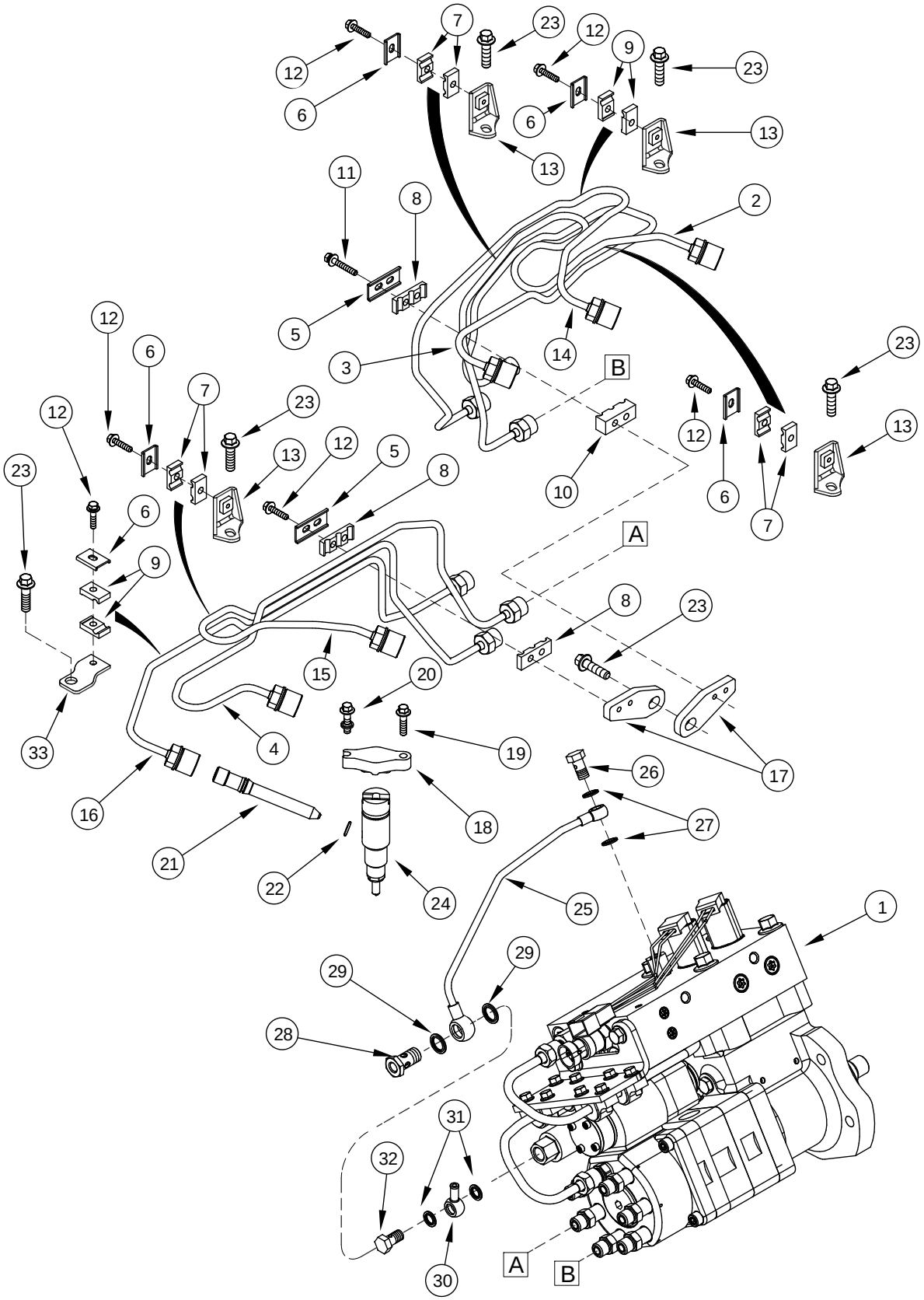

SISTEMA DE INYECCIÓN DEL COMBUSTIBLE, MX255 Y MX285
SISTEMA DE INJECÇÃO DE COMBUSTÍVEL, MODELOS MX255 E MX285
BRANDSTOFINJECTIESYSTEEM, MX255 EN MX285
BRÆNDSTOFINDSPRØJTNINGSSYSTEM, MX255 OG MX285

R	N	P.N.	MOD	Q	Description Denominacion	Descrizione Denominação	Description Beschrijving	Bezeichnung Beskrivelse	L.C.
24	1	J948529		6	INJECTOR ASSY. INYECTOR (CONJUNTO)	INIETTORE, COMPLESS INJETOR CONJUNTO	INJECTEUR (ASSEMBLE INJECTOR ASSY.	DUESE (KPLT.) INJECTOR ASSY.	P497
25		J4010174		1	TUBE TUBO	TUBETTO TUBO	TUBE BUISJE	SCHLAUCH RØR	195T
26		J918002		1	SCREW TORNILLO	VITE PARAFUSO	VIS SCHROEF	SCHRAUBE SKRUE	040V
27		J935170		2	WASHER, SPECIAL ARANDELA FRENO	RONDELLA SPECIALE ARRUELA ESPECIAL	RONDELLE SPÉCIALE CILINDERPAKKING. KOF	SPEZIALSCHEIBE SPECIALSKIVE	Z333
28		J4002006		1	SCREW TORNILLO	VITE PARAFUSO	VIS SCHROEF	SCHRAUBE SKRUE	040V
29		J918192		2	RING, PACKING ARANDELA JUNTA	ANELLO, DI RIEMPIM. ARANDELA JUNTA	RONDELLE JOINT RING, PACKING	DICHTRING PAKNINGSRING	P614
30		J944869		1	CONNECTOR, HYD. RACOR	RACCORDO IDRAULICO CONECTOR	RACCORD VERBINDING	STUTZEN FORSKRUNING	020R
31		J918192		2	RING, PACKING 14 x 20 x 1 mm ARANDELA JUNTA	ANELLO, DI RIEMPIM. ARANDELA JUNTA	RONDELLE JOINT RING, PACKING	DICHTRING PAKNINGSRING	P614
32		J924725		1	BOLT, BANJO BOQUILLA	BOCCHETTONE PARAFUSO RACCORD	VIS-RACCORD VERBINDINGSBOUT	HOHLSCHRAUBE BANJOBOLT	090B
33		J943503		1	SUPPORT SOPORTE	SUPPORTO SUPORTE	SUPPORT STEUN	STÜTZE BESLAG	300S

(1) See Figure 03-15

ANEROID AND WASTEGATE SYSTEM, MX210 AND MX230
IMPIANTO DELL'ANEROIDE E DELLA VALVOLA WESTGATE, MX210 E MX230
CIRCUIT DE LA SOUPAPE DE DÉCHARGE ET DE L'ANÉROÏDE, MX210 ET MX230
ANEROID- UND LADEDRUCK-REGELVENTILSYSTEM DER SERIEN MX210 UND MX230

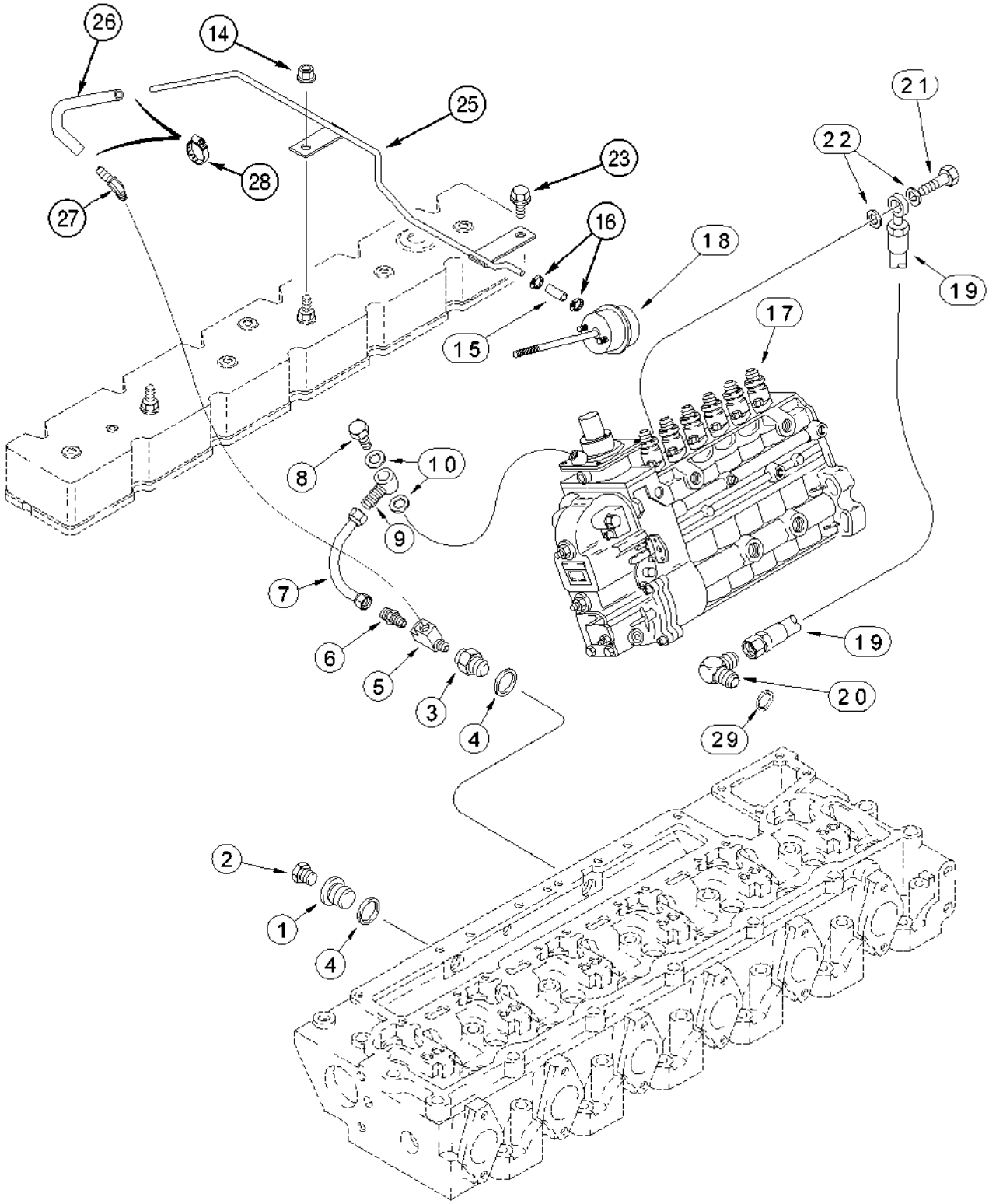

SISTEMA DE DESCARGA Y ANEROIDE , MX210 Y MX230
ANERÓIDE E SISTEMA DA VÁLVULA DE ESCAPE, MODELOS MX210 E MX230
ANEROÏDE EN WASTEGATE SYSTEEM, MX210 EN MX230
ANEROID- OG WASTEGATESYSTEM, MX210 OG MX230

R	N	P.N.	MOD	Q	Description Denominacion	Descrizione Denominação	Description Beschrijving	Bezeichnung Beskrivelse	L.C.
1		J924148		1	PLUG TAPÓN	TAPPO BUJÃO	BOUCHON PLUG	STOPFEN PROP	050T
2		217-432		1	PLUG 1/4 PT TAPÓN	TAPPO BUJÃO	BOUCHON PLUG	STOPFEN PROP	050T
3		J921594		1	PLUG TAPÓN	TAPPO BUJÃO	BOUCHON PLUG	STOPFEN PROP	050T
4		J902425		2	WASHER ARANDELA	ROSETTA PIANA ANILHA	RONDELLE SLUITRING	BEILAGSCHEIBE FLADSKIVE	131R
5		J930789		1	TEE RACOR-T	PEZZO A T TE	TE TEE	T-STÜCK T-STYKKE	9020
6		222-21		1	CONNECTOR 3/16 OD x 1/8 PT CONECTOR	CONNESSIONE CONECTOR	CONNECTEUR VERBINDING	STECKVERBINDUNG ELI STIK	1950
8		J903035		1	BOLT, BANJO M12 x 24 BOQUILLA	BOCCHETTONE PARAFUSO RACCORD	VIS-RACCORD VERBINDINGSBOUT	HOHLSCHRAUBE BANJOBOLT	090B
7		J991512		1	TUBE TUBO	TUBETTO TUBO	TUBE BUISJE	SCHLAUCH RØR	195T
9		J990881		1	FITTING CONEXION	RACCORDO CONEXAO	RACCORD FITTING	ANSCHLUSSSTÜCK FITTING	3300
10		J935171		2	WASHER, SEALING 12 x 19 x 1,5 mm JUNTA HERMETICA	ROSETTA DI TENUTA JUNTA HERMETICA	RONDELLE D'ETANCHEI DICHTRING	DICHTSCHEIBE TAETNINGSSKIVE	133R
14		825-2408		1	NUT M8 TUERCA	DADO PORCA	ECROU MOER	MUTTER MØTRIK	5780
15		J938056		1	HOSE 51 mm (2-1/8 in) MANGA	MANICOTTO FLESSIBILE TUBO FLEXIVEL	FLEXIBLE FLEXIBELE BUIS	SCHLAUCH SLANGE	030M
16		214-1704		2	CLAMP 1/4 - 5/8 COLLAR	MORSETTO BRACADEIRA	COLLIER CLAMP	SCHELLE CLAMP	1640
17	1	REF		1	INSTRUCTION Pump Assy MANUAL	ISTRUZIONI INSTRUCAO	NOTICE INSTRUCTION	HINWEIS SKO, INDRE	Z571
18	2	REF		1	INSTRUCTION Actuator MANUAL	ISTRUZIONI INSTRUCAO	NOTICE INSTRUCTION	HINWEIS SKO, INDRE	Z571
19		J916779		1	HOSE, FLEXIBLE 508 mm (20 in) MANGA FLEXIBLE	TUBO FLESSIBILE TUBO FLEXIVEL	TUYAU FLEXIBLE FLEXIBELE SLANG	SCHLAUCH, FLEXIBEL FLEKSIBEL SLANGE	192T
20		J945212		1	ELBOW 7/16 90 deg fl x M10, To Cylinder Block CODO	GOMITO JOELHO	COUDE ELLEBOOG	KNIESTÜCK VINKELROER	085G
21		J918002		1	SCREW TORNILLO	VITE PARAFUSO	VIS SCHROEF	SCHRAUBE SKRUE	040V
22		J918190		2	WASHER, SEALING 10 x 15,5 x 1 mm JUNTA HERMETICA	ROSETTA DI TENUTA JUNTA HERMETICA	RONDELLE D'ETANCHEI DICHTRING	DICHTSCHEIBE TAETNINGSSKIVE	133R
23		844-10020		1	SCREW M10 x 20; 8,8 TORNILLO	VITE PARAFUSO	VIS SCHROEF	SCHRAUBE SKRUE	7450
25		J935612		1	PIPE CUELLO DE CARGA	TUBO TUBO DE ENCHIMENTO	TUYAU OPVULPIJP	ROHR PAAFYLDNINGSSTUDS	200T

(1) See Figure 03-07
(2) See Figure 02-21

ANEROID AND WASTEGATE SYSTEM, MX210 AND MX230
IMPIANTO DELL'ANEROIDE E DELLA VALVOLA WESTGATE, MX210 E MX230
CIRCUIT DE LA SOUPAPE DE DÉCHARGE ET DE L'ANÉROÏDE, MX210 ET MX230
ANEROID- UND LADEDRUCK-REGELVENTILSYSTEM DER SERIEN MX210 UND MX230

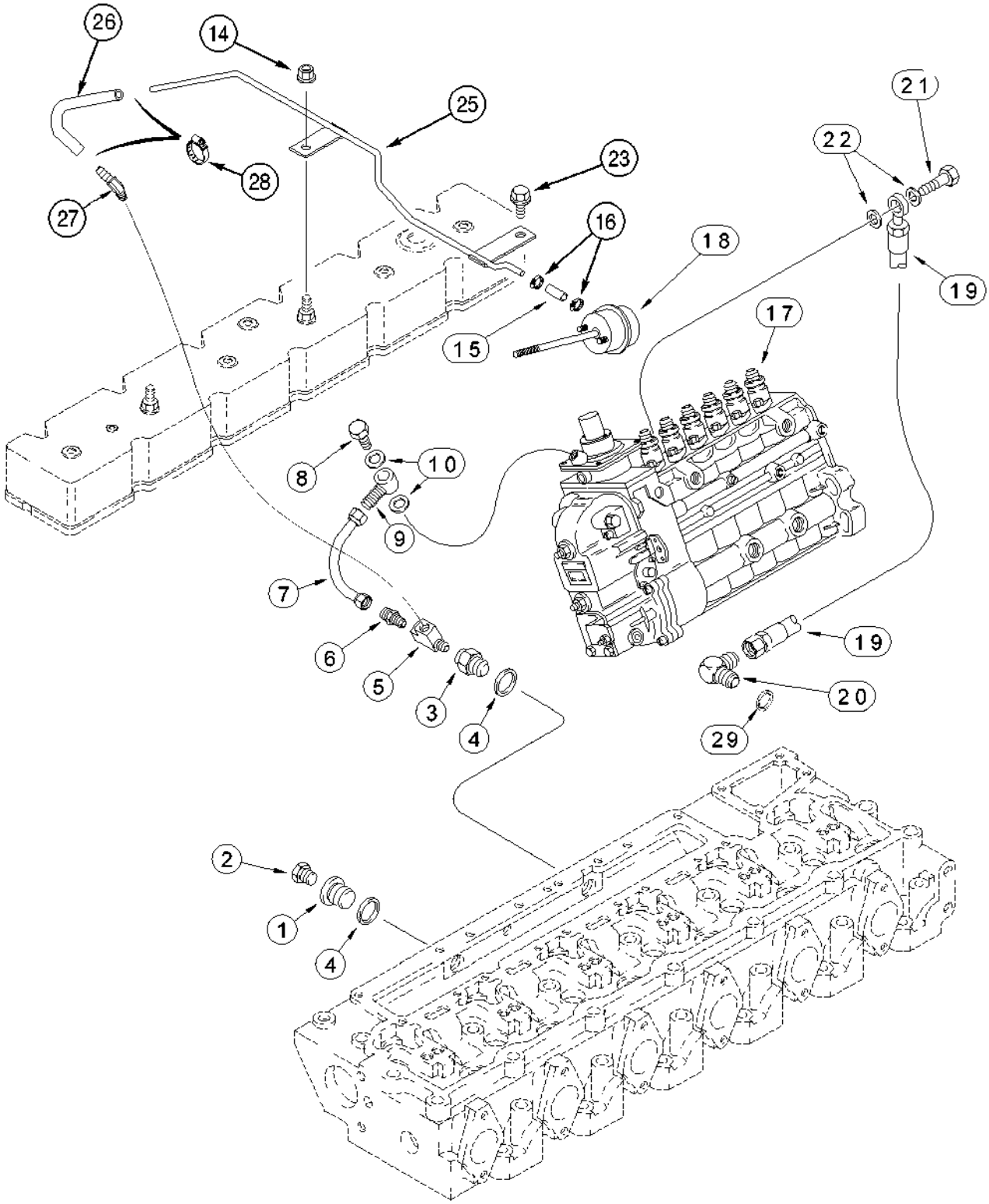

SISTEMA DE DESCARGA Y ANEROIDE , MX210 Y MX230
ANERÓIDE E SISTEMA DA VÁLVULA DE ESCAPE, MODELOS MX210 E MX230
ANEROÏDE EN WASTEGATE SYSTEEM, MX210 EN MX230
ANEROID- OG WASTEGATESYSTEM, MX210 OG MX230

R	N	P.N.	MOD	Q	Description Denominacion	Descrizione Denominação	Description Beschrijving	Bezeichnung Beskrivelse	L.C.
26		J991038		1	HOSE 254 mm (Cut To Length, 182 mm)				
						MANICOTTO FLESSIBILE	FLEXIBLE	SCHLAUCH	030M
					MANGA	TUBO FLEXIVEL	FLEXIBELE BUIS	SLANGE	
27		217-281		1	INSERT 1/4 barb x 1/8 PT	INSERTO	INSERT	EINSATZ	4675
					INTRODUCTOR	POSTICO	TUSSENSTUK	INDSATS	
28		214-1704		1	CLAMP 1/4 - 5/8	MORSETTO	COLLIER	SCHELLE	1640
					COLLAR	BRACADEIRA	CLAMP	CLAMP	
29		637-72081		1	O-RING 8,1 ID x 1,6 mm	ANELLO TOROIDALE	JOINT TORIQUE	O-RING	7176
					JUNTA HERMETICA	ANEL O	O-RING	O-RING	

FUEL FILTER - PUMP, TRANSFER, MX210 AND MX230
FILTRO DEL COMBUSTIBILE - POMPA, TRASFERIMENTO, MX210 E MX230
FILTRE DE LA POMPE DE TRANSFERT DE CARBURANT, MX210 ET MX230
KRAFTSTOFFFILTER FÜR TRANSFERPUMPE DER SERIEN MX210 UND MX230

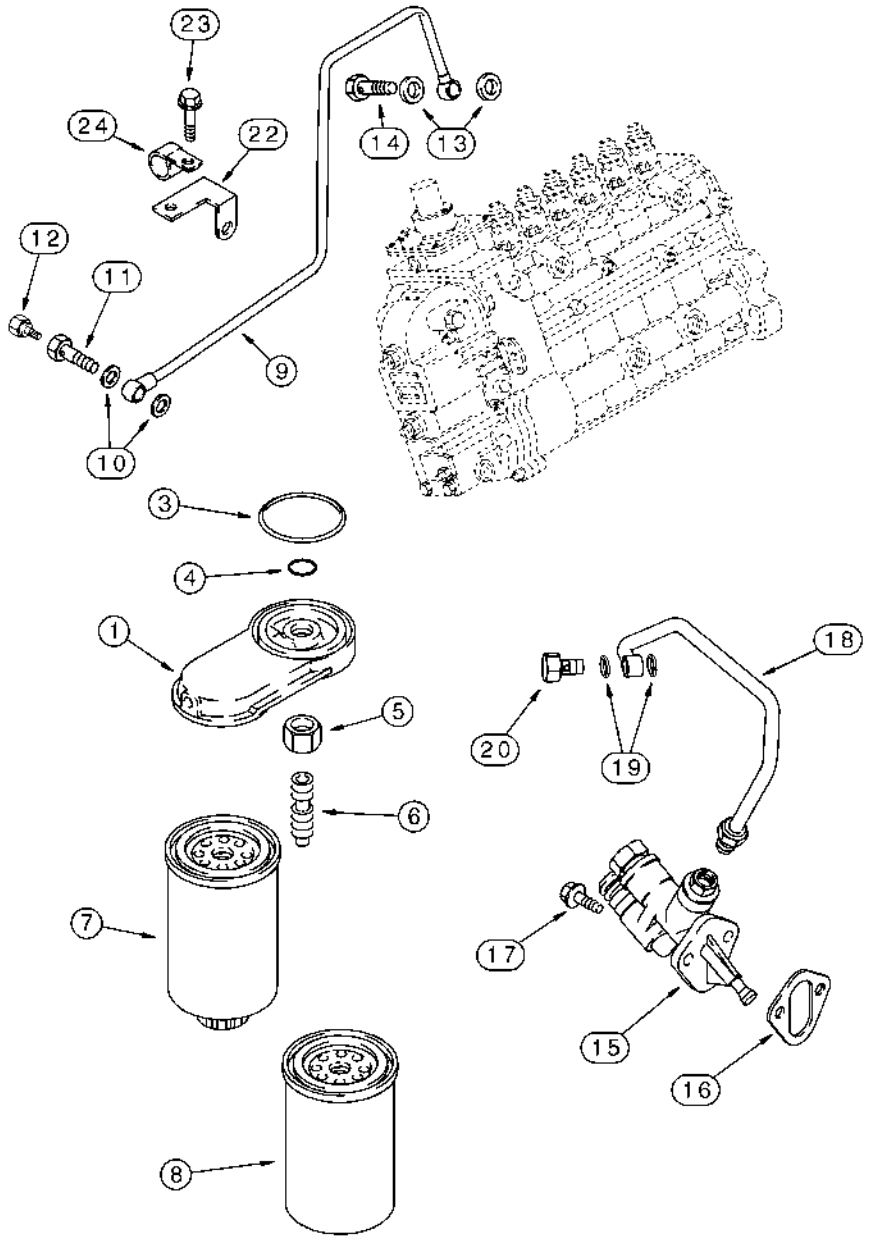

FILTRO DE COMBUSTIBLE - BOMBA, TRANSFERENCIA, MX210 Y MX230
FILTRO DE COMBUSTÍVEL - BOMBA DE TRANSFERÊNCIA, MODELOS MX210 E MX230
BRANDSTOFFILTER - POMP, OPVOER, MX210 EN MX230
BRÆNDSTOFFILTER - PUMPE, OVERFØRSEL, MX210 OG MX230

R	N	P.N.	MOD	Q	Description Denominacion	Descrizione Denominação	Description Beschrijving	Bezeichnung Beskrivelse	L.C.
1		J936315		1	HEAD, FILTER Filter Head CABEZA DE FILTRO	TESTA DEL FILTRO CABEZA DE FILTRO	TETE DE FILTRE FILTERHUVUD	FILTERKOPF TOPSTYKKEFILTER	A007
3		J906694		1	O-RING 70 mm JUNTA HERMETICA	ANELLO TOROIDALE O-RING	JOINT THORIQUE O-RING	DICHTRING O-RING	055A
4		J906695		1	O-RING 14 mm JUNTA HERMETICA	ANELLO TOROIDALE O-RING	JOINT THORIQUE O-RING	DICHTRING O-RING	055A
5		J903293		1	NUT M16 TUERCA	DADO PORCA	ECROU MOER	MUTTER MØTRIK	010D
6		J925955		1	ADAPTER ADAPTOR	ADATTATORE ADAPTOR	ADAPTEUR VERLOOPSTUK	ADAPTER ADAPTER	001A
6A		A77470		1	FILTER Kit, Not Illustrated, Inc. 7, 8 FILTRO	FILTRO FILTRO	FILTRE FILTER	FILTER FILTER	3240
7		J930942		1	FILTER, FUEL FILTRO DE COMBUSTIBI	FILTRO COMBUSTIBILE FILTRO DE COMBUSTIVI	FILTRE A COMBUSTIBLE BRANDSTOFFILTER	KRAFTSTOFFILTER BRÆNDSTOFFILTER	Z498
8		J931063		1	FILTER FILTRO	FILTRO FILTRO	FILTRE FILTER	FILTER FILTER	3240
9		J930766		1	PIPE CUELLO DE CARGA	TUBO TUBO DE ENCHIMENTO	TUYAU OPVULPIJP	ROHR PAAFYLDNINGSSTUDS	200T
10		J935171		2	WASHER, SEALING 12 x 19 x 1,5 mm JUNTA HERMETICA	ROSETTA DI TENUTA JUNTA HERMETICA	RONDELLE D'ETANCHEI DICHTRING	DICHTSCHEIBE TAETNINGSSKIVE	133R
11		J911446		1	SCREW M12 x 24 TORNILLO	VITE PARAFUSO	VIS SCHROEF	SCHRAUBE SKRUE	040V
12		J939570		1	SCREW, BLEED TORNILLO DE PURGA	VITE DI SPURGO PARAFUSO SANGRADOI	VIS DE PURGE SCHROEF, ONTLUCHTIN	ENTLÜFTUNGSSCHRAU UDLUFTNINGSSKRUE	046V
13		J918192		2	RING, PACKING 14 x 20 x 1 mm ARANDELA JUNTA	ANELLO, DI RIEMPIM. ARANDELA JUNTA	RONDELLE JOINT RING, PACKING	DICHTRING PAKNINGSRING	P614
14		J924725		1	BOLT, BANJO BOQUILLA	BOCCHETTONE PARAFUSO RACCORD	VIS-RACCORD VERBINDINGSBOUT	HOHLSCHRAUBE BANJOBOLT	090B
15		J936316		1	PUMP BOMBA	POMPA BOMBA	POMPE PUMP	PUMPE PUMPE	6570
16		J939258		1	GASKET JUNTA HERMETICA	GUARNIZIONE JUNTA	JOINT DICHTINGSSTUK	DICHTUNG, FLACH PAKNING	123G
17		J909310		2	SCREW TORNILLO	VITE PARAFUSO	VIS SCHROEF	SCHRAUBE SKRUE	040V
18		J918539		1	TUBE TUBO	TUBETTO TUBO	TUBE BUISJE	SCHLAUCH RØR	195T
19		J935171		2	WASHER, SEALING 12 x 19 x 1,5 mm JUNTA HERMETICA	ROSETTA DI TENUTA JUNTA HERMETICA	RONDELLE D'ETANCHEI DICHTRING	DICHTSCHEIBE TAETNINGSSKIVE	133R
20		J916361		1	BOLT M12 x 24 TORNILLO	BULLONE PARAFUSO	BOULON BOUT	SCHAUBENBOLZEN SKRUE	140B
22		J930375		1	BRACE TENSOR	MENARUOLA TENSOR	JAMBE-DE-FORCE BRACE	STREBE BRACE	0990
23		283264A1		1	BOLT M8 x 14; 10.9 TORNILLO	BULLONE PARAFUSO	BOULON BOUT	SCHAUBENBOLZEN SKRUE	140B

FUEL FILTER - PUMP, TRANSFER, MX210 AND MX230
FILTRO DEL COMBUSTIBILE - POMPA, TRASFERIMENTO, MX210 E MX230
FILTRE DE LA POMPE DE TRANSFERT DE CARBURANT, MX210 ET MX230
KRAFTSTOFFFILTER FÜR TRANSFERPUMPE DER SERIEN MX210 UND MX230

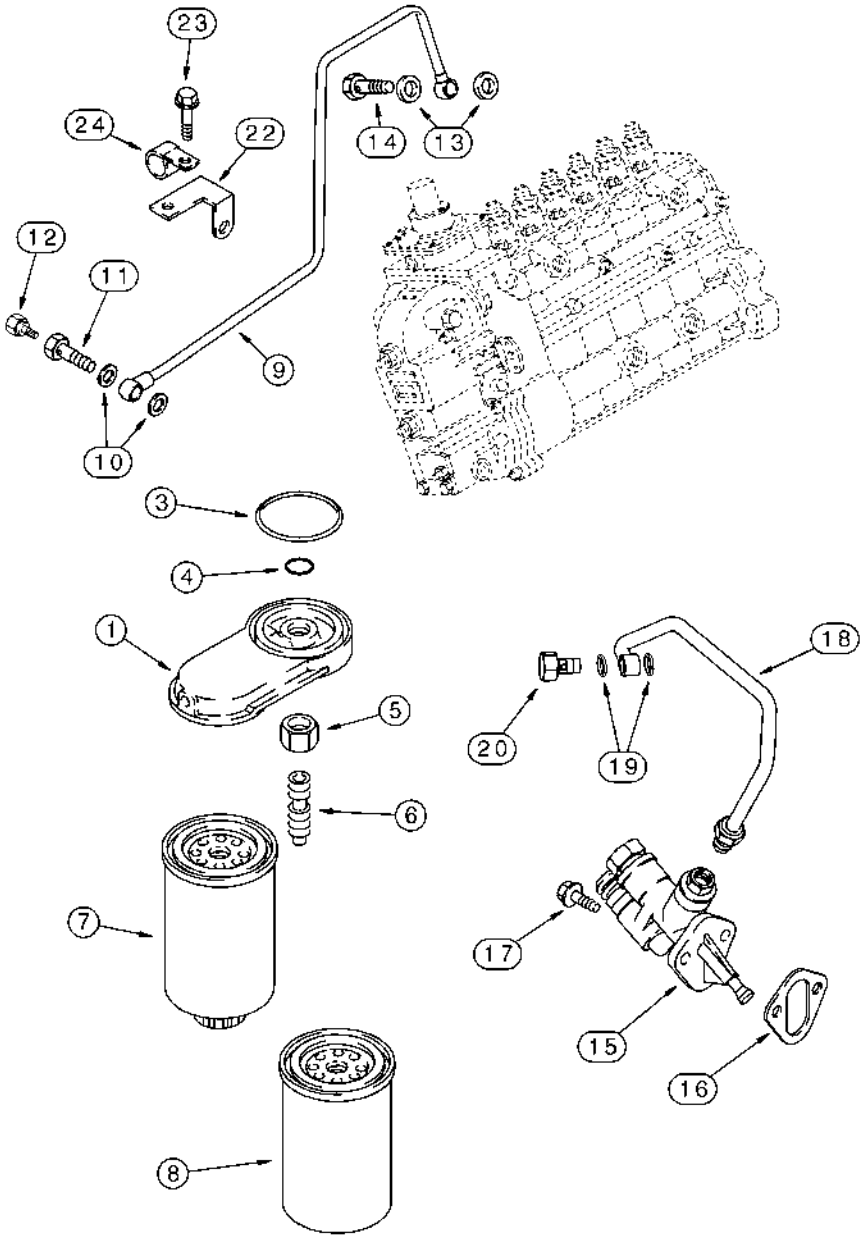

FILTRO DE COMBUSTIBLE - BOMBA, TRANSFERENCIA, MX210 Y MX230
FILTRO DE COMBUSTÍVEL - BOMBA DE TRANSFERÊNCIA, MODELOS MX210 E MX230
BRANDSTOFFILTER - POMP, OPVOER, MX210 EN MX230
BRÆNDSTOFFILTER - PUMPE, OVERFØRSEL, MX210 OG MX230

R	N	P.N.	MOD	Q	Description Denominacion	Descrizione Denominação	Description Beschrijving	Bezeichnung Beskrivelse	L.C.
24		J914711		1	CLIP SUJETADOR	FERMAGLIO FIXADOR	CLIP KLEM	KLAMMER KLIPS	045F

PUMP, FUEL TRANSFER, MX255 AND MX285
POMPA, TRASFERIMENTO DEL COMBUSTIBILE, MX255 E MX285
POMPE DE TRANSFERT DE CARBURANT, MX255 ET MX285
KRAFTSTOFF-TRANSFERPUMPE DER SERIEN MX255 UND MX285

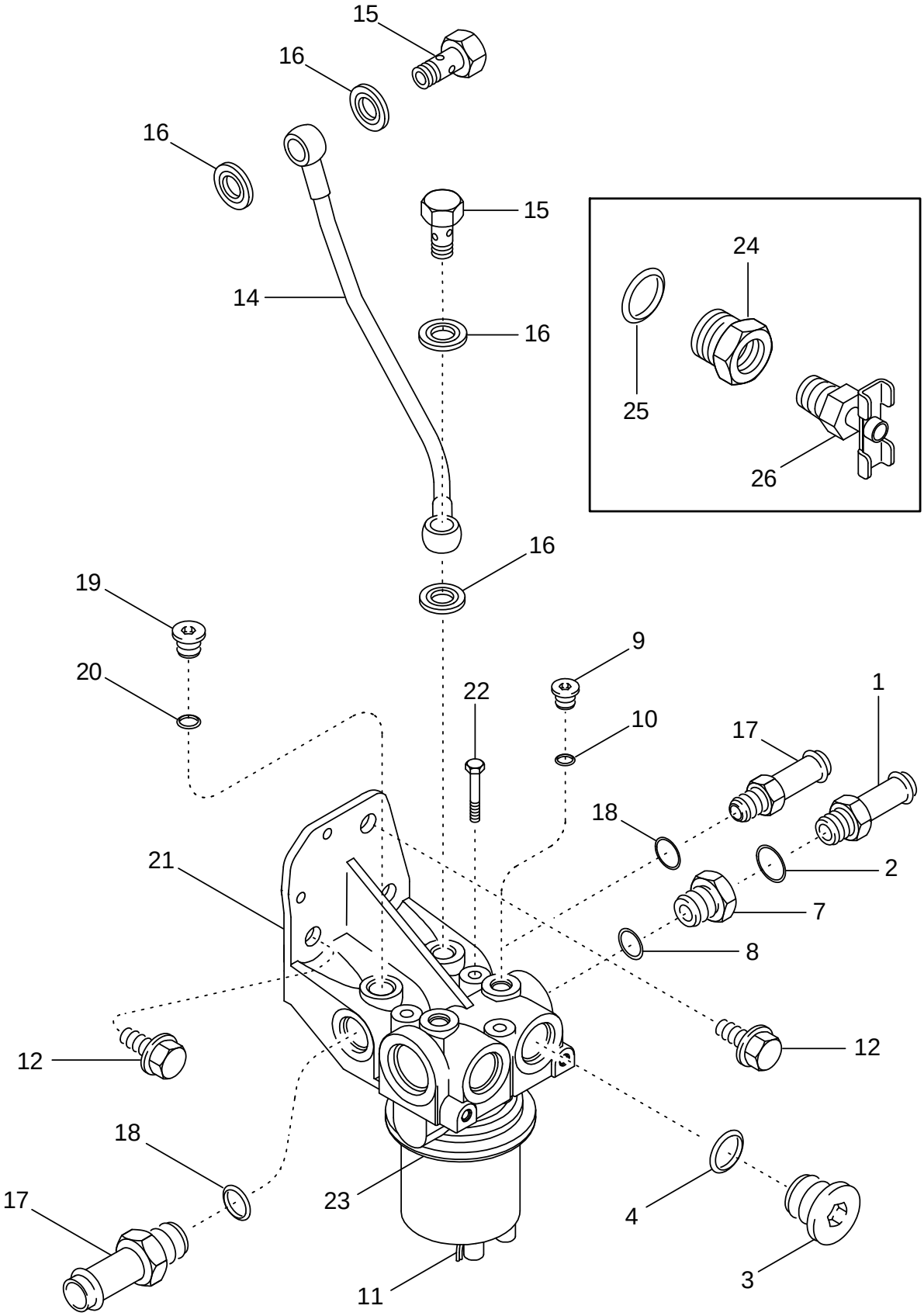

BOMBA, TRANSFERENCIA DE COMBUSTIBLE, MX255 Y MX285
BOMBA DE TRANSFERÊNCIA DE COMBUSTÍVEL, MODELOS MX255 E MX285
POMP, BRANDSTOFOPVOER-, MX255 EN MX285
PUMPE, BRÆNDSTOFOVERFØRSEL, MX255 OG MX285

R	N	P.N.	MOD	Q	Description Denominacion	Descrizione Denominação	Description Beschrijving	Bezeichnung Beskrivelse	L.C.
1		J931014		1	COUPLING, PUSH-PULL Inc. 2				
						ATTACCO,CONTROFASE	ACCOUPLEMENT RAP.	ABREISSKUPPLUNG	P890
					ACOPLAMIENTO RÁPIDO	ACOPLAMENTO RÁPIDO	COUPLING, PUSH-PULL	SKUB/TRÆK KOBLING	
2		237-8008		1	O-RING 41/64 ID x 3/32	ANELLO TOROIDALE	JOINT THORIQUE	DICHTRING	055A
					JUNTA HERMETICA	O-RING	O-RING	O-RING	
3		311184A1		2	PLUG 7/8-16, Inc. 4	TAPPO	BOUCHON	STOPFEN	050T
					TAPÓN	BUJÃO	PLUG	PROP	
4		237-8010		2	O-RING 3/4 ID x 3/32	ANELLO TOROIDALE	JOINT TORIQUE	O-RING	7176
					JUNTA HERMETICA	ANEL O	O-RING	O-RING	
7		J944823		1	ADAPTER Includes 8	ADATTATORE	ADAPTEUR	ADAPTER	001A
					ADAPTOR	ADAPTOR	VERLOOPSTUK	ADAPTER	
8		237-8010		1	O-RING 3/4 ID x 3/32	ANELLO TOROIDALE	JOINT TORIQUE	O-RING	7176
					JUNTA HERMETICA	ANEL O	O-RING	O-RING	
9		J678923		2	PLUG 10 mm, Inc. 10	TAPPO	BOUCHON	STOPFEN	050T
					TAPÓN	BUJÃO	PLUG	PROP	
10		637-62081		1	O-RING 8,1 ID x 1,6 mm	ANELLO TOROIDALE	JOINT TORIQUE	O-RING	7176
					JUNTA HERMETICA	ANEL O	O-RING	O-RING	
11		J949093		1	PUMP, FEED Inc. 9, 10, 21 - 23				
						POMPA, CONVOGL	POMPE ALIMENTATION	FÖRDERPUMPE	Z057
					BOMBA ALIMENTACION	BOMBA DE ALIMENTAÇÃ	PUMP, FEED	FØDEPUMPE	
12		844-10025		3	SCREW M10 x 20; 8.8	VITE	VIS	SCHRAUBE	P136
					TORNILLO	PARAFUSO	SCHROEF	SKRUE	
14		J943599		1	TUBE	TUBETTO	TUBE	SCHLAUCH	195T
					TUBO	TUBO	BUISJE	RØR	
15		J903035		2	BOLT, BANJO M12 x 24	BOCCHETTONE	VIS-RACCORD	HOHLSCHRAUBE	090B
					BOQUILLA	PARAFUSO RACCORD	VERBINDINGSBOUT	BANJOBOLT	
16		J935171		4	WASHER, SEALING 12 x 19 x 1,5 mm				
						ROSETTA DI TENUTA	RONDELLE D'ETANCHEI	DICHTSCHEIBE	133R
					JUNTA HERMETICA	JUNTA HERMETICA	DICHTRING	TAETNINGSSKIVE	
17		J944825		2	COUPLING Inc. 18	TESTA A CAMPANA	CHAPE	GLOCKENKOPF	109T
					ELEMENTO DE ACOPLAI	ELEMENTO DE ACOPLAI	KOPPELING	KOBLING	
18		237-8008		2	O-RING 41/64 ID x 3/32	ANELLO TOROIDALE	JOINT THORIQUE	DICHTRING	055A
					JUNTA HERMETICA	O-RING	O-RING	O-RING	
19		J678921		1	PLUG 14 mm, Inc. 20	TAPPO	BOUCHON	STOPFEN	050T
					TAPÓN	BUJÃO	PLUG	PROP	
20		J678912		1	O-RING 11,3 ID x 2,2 mm	ANELLO TOROIDALE	JOINT THORIQUE	DICHTRING	055A
					JUNTA HERMETICA	O-RING	O-RING	O-RING	
21		NSS		1	NOT SERVICED SEPARATELY Bracket				
						NON FORNITO SEPARAT	NON FOURNI SEPAREMI	KEIN ERSATZTEIL	064N
					NO SE REPARA SEPARA	NOT SERVICED SEPARA	NIET ALLEEN VERKRIJG	NOT SERVICED SEPARA	
22		414-432		3	SCREW 1/4 x 2	VITE	VIS	SCHRAUBE	P136
					TORNILLO	PARAFUSO	SCHROEF	SKRUE	
23		J944382		1	GASKET Mounting	GUARNIZIONE	JOINT	DICHTUNG, FLACH	123G
					JUNTA HERMETICA	JUNTA	DICHTINGSSTUK	PAKNING	
24	1	87448793		1	ADAPTER Inc. 25	ADATTATORE	ADAPTEUR	ADAPTER	001A
					ADAPTOR	ADAPTOR	VERLOOPSTUK	ADAPTER	
25		237-8010		1	O-RING 3/4 ID x 3/32	ANELLO TOROIDALE	JOINT TORIQUE	O-RING	7176
					JUNTA HERMETICA	ANEL O	O-RING	O-RING	

(1) With Fuel Separator Filter

PUMP, FUEL TRANSFER, MX255 AND MX285
POMPA, TRASFERIMENTO DEL COMBUSTIBILE, MX255 E MX285
POMPE DE TRANSFERT DE CARBURANT, MX255 ET MX285
KRAFTSTOFF-TRANSFERPUMPE DER SERIEN MX255 UND MX285

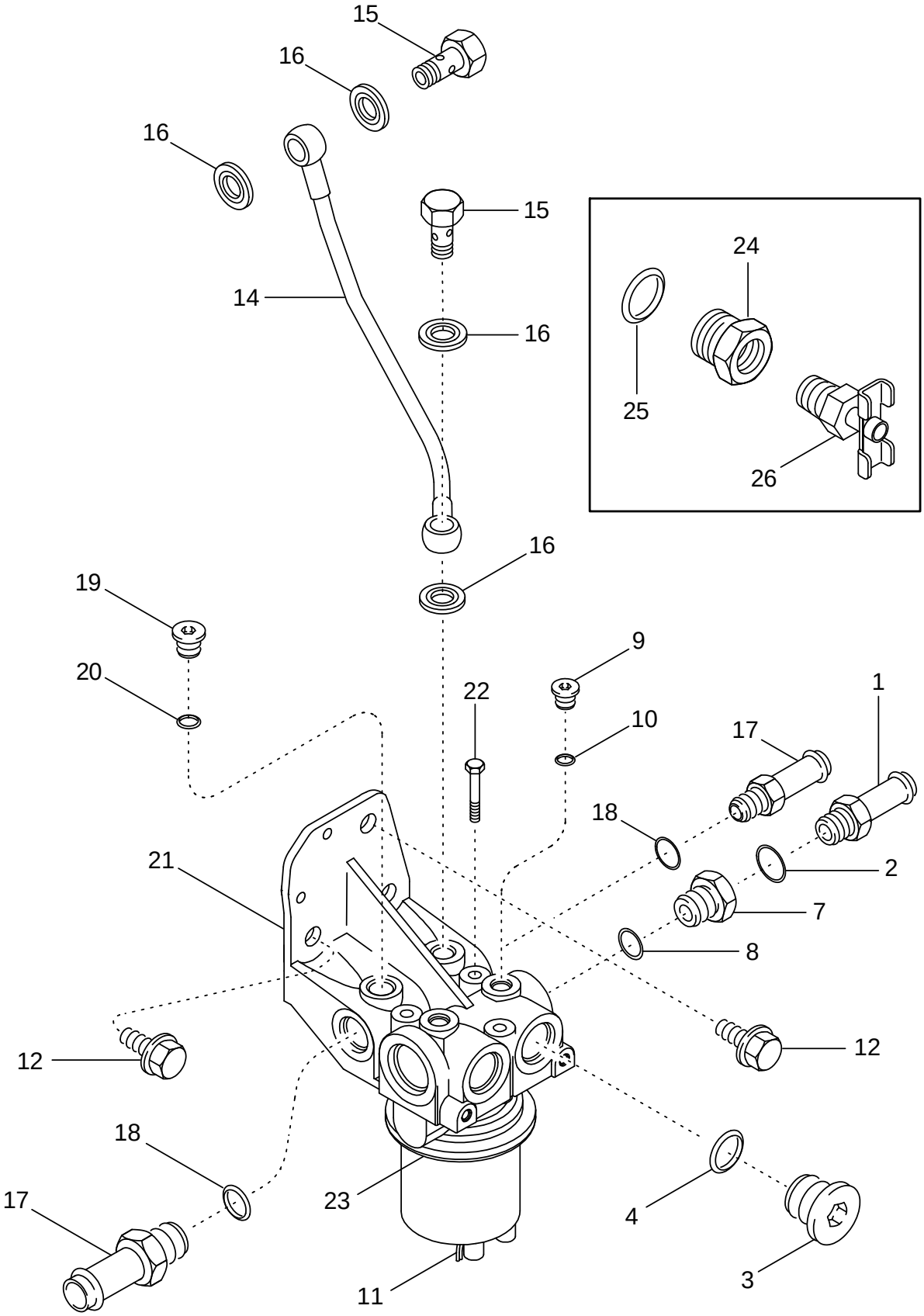

BOMBA, TRANSFERENCIA DE COMBUSTIBLE, MX255 Y MX285
BOMBA DE TRANSFERÊNCIA DE COMBUSTÍVEL, MODELOS MX255 E MX285
POMP, BRANDSTOFOPVOER-, MX255 EN MX285
PUMPE, BRÆNDSTOFOVERFØRSEL, MX255 OG MX285

R	N	P.N.	MOD	Q	Description Denominacion	Descrizione Denominação	Description Beschrijving	Bezeichnung Beskrivelse	L.C.
26	1	**76904**		1	DRAINCOCK/TAP, SUPPLY				
						RUBINETTO	ROBINET	ABLASSHAHN	150R
					GRIFO	TORNEIRA	KRAAN	HANE	

(1) With Fuel Separator Filter

FUEL FILTER AND CONNECTIONS, MX255 AND MX285
FILTRO E COLLEGAMENTI DEL COMBUSTIBILE, MX255 E MX285
FILTRE À CARBURANT ET CONNEXIONS, MX255 ET MX285
KRAFTSTOFFFILTER UND ANSCHLÜSSE DER SERIEN MX255 UND MX285

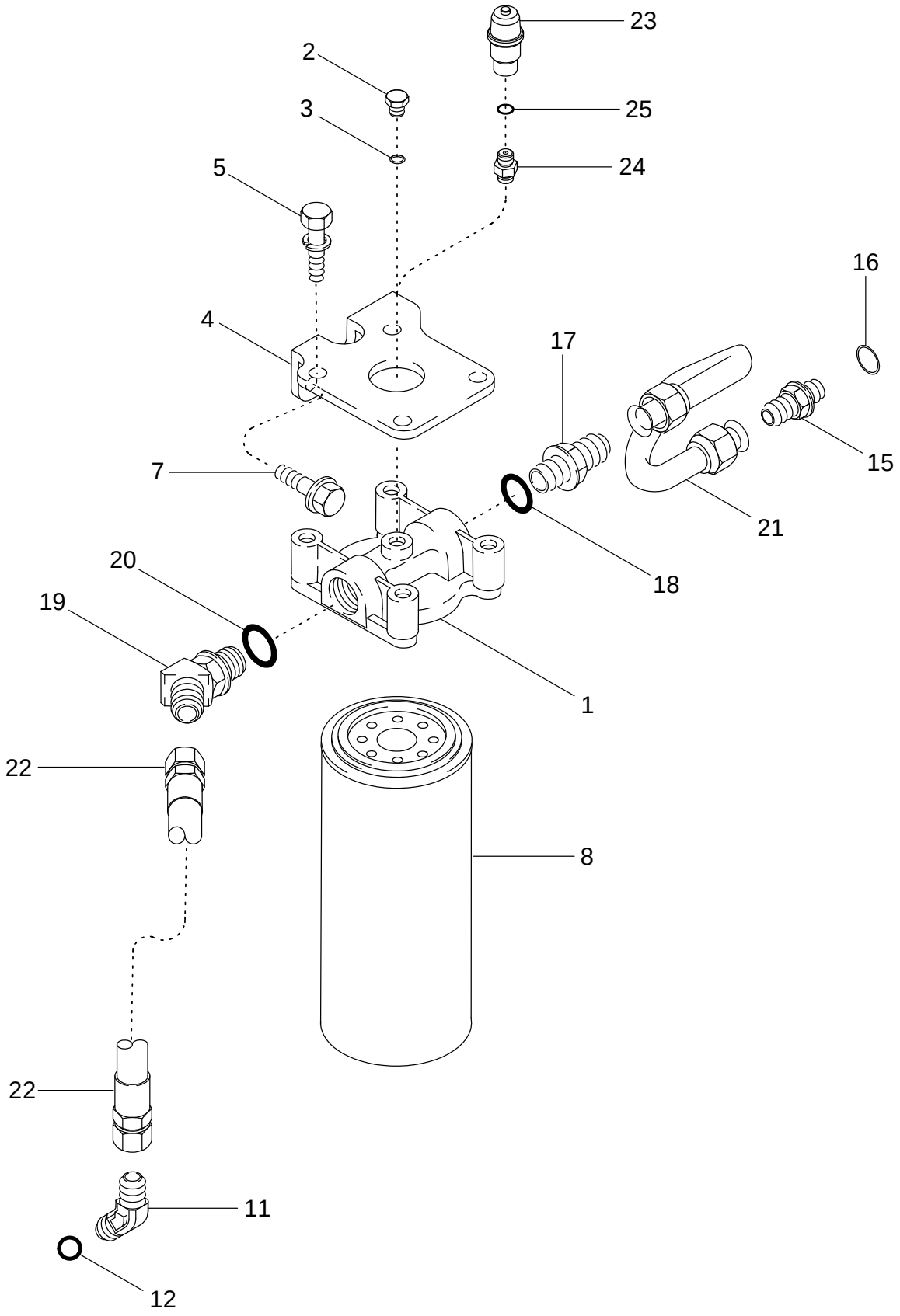

FILTRO DE COMBUSTIBLE Y CONEXIONES, MX255 Y MX285
FILTRO DE COMBUSTÍVEL E LIGAÇÕES, MODELOS MX255 E MX285
BRANDSTOFFILTER EN AANSLUITINGEN, MX255 EN MX285
BRÆNDSTOFFILTER OG FORBINDELSER, MX255 OG MX285

R	N	P.N.	MOD	Q	Description Denominacion	Descrizione Denominação	Description Beschrijving	Bezeichnung Beskrivelse	L.C.
1		J944987		1	HEAD CULATA	TESTA CABECA	TÊTE HEAD	KOPF HOVED	4180
2		J678923		1	PLUG 10 mm, Inc. 3 TAPÓN	TAPPO BUJÃO	BOUCHON PLUG	STOPFEN PROP	050T
3		637-72081		1	O-RING 8,1 ID x 1,6 mm JUNTA HERMETICA	ANELLO TOROIDALE ANEL O	JOINT TORIQUE O-RING	O-RING O-RING	7176
4		J944845		1	BRACKET PIEZA DE SOPORTE	STAFFA BRACADEIRA	PATTE FIXATION STEUNBEUGEL	HALTERUNG BESLAG	225S
5		A77546		4	BOLT 3/8 NC x 1-1/4 in TORNILLO	BULLONE PARAFUSO	BOULON BOUT	SCHAUBENBOLZEN SKRUE	140B
7		844-10020		2	SCREW M10 x 20; 8,8 TORNILLO	VITE PARAFUSO	VIS SCHROEF	SCHRAUBE SKRUE	7450
8		J329289		1	FILTER, FUEL FILTRO DE COMBUSTIBI	FILTRO COMBUSTIBILE FILTRO DE COMBUSTIVI	FILTRE A COMBUSTIBLE BRANDSTOFFILTER	KRAFTSTOFFILTER BRÆNDSTOFFILTER	Z498
11		311171A1		1	ELBOW 45 deg, Inc. 12 CODO	GOMITO JOELHO	COUDE ELLEBOOG	KNIESTÜCK VINKELROER	085G
12		237-8008		1	O-RING 41/64 ID x 3/32 JUNTA HERMETICA	ANELLO TOROIDALE O-RING	JOINT THORIQUE O-RING	DICHTRING O-RING	055A
15		311187A1		1	ADAPTER Inc. 16 ADAPTOR	ADATTATORE ADAPTOR	ADAPTEUR VERLOOPSTUK	ADAPTER ADAPTER	001A
16		237-8012		1	O-RING 3/4 OD JUNTA HERMETICA	ANELLO TOROIDALE ANEL O	JOINT TORIQUE O-RING	O-RING O-RING	7176
17		J606653		1	ADAPTER Inc. 18 ADAPTOR	ADATTATORE ADAPTOR	ADAPTEUR VERLOOPSTUK	ADAPTER ADAPTER	001A
18		237-8010		1	O-RING 3/4 ID x 3/32 JUNTA HERMETICA	ANELLO TOROIDALE ANEL O	JOINT TORIQUE O-RING	O-RING O-RING	7176
19		326380A1		1	ELBOW Inc. 20 CODO	GOMITO JOELHO	COUDE ELLEBOOG	KNIESTÜCK VINKELROER	085G
20		237-8010		1	O-RING 3/4 ID x 3/32 JUNTA HERMETICA	ANELLO TOROIDALE ANEL O	JOINT TORIQUE O-RING	O-RING O-RING	7176
21		J943442		1	TUBE TUBO	TUBETTO TUBO	TUBE BUISJE	SCHLAUCH RØR	195T
22		J944988		1	HOSE 305 mm (12 in) MANGA	MANICOTTO FLESSIBILE TUBO FLEXIVEL	FLEXIBLE FLEXIBELE BUIS	SCHLAUCH SLANGE	030M
23		451023A1		1	INDICATOR Fuel Restriction (If Equipped) TESTIGO	SEGNALATORE INDICADOR	INDICATEUR AANWIJZER	ANZEIGE INDIKATOR	087S
24		250838A2		1	CONNECTOR Inc. 25 (If Equipped) CONECTOR	CONNESSIONE CONECTOR	CONNECTEUR VERBINDING	STECKVERBINDUNG ELI STIK	235C
25		637-72081		1	O-RING 8,1 ID x 1,6 mm (If Equipped) JUNTA HERMETICA	ANELLO TOROIDALE ANEL O	JOINT TORIQUE O-RING	O-RING O-RING	7176

FUEL INJECTION - PUMP AND DRIVE, MX210 AND MX230
INIEZIONE DEL COMBUSTIBILE - POMPA E TRASMISSIONE, MX210 E MX230
POMPE ET ENTRAÎNEMENT DE L'INJECTION DE CARBURANT, MX210 ET MX230
KRAFTSTOFF-EINSPRITZPUMPE UND PUMPENANTRIEB DER SERIEN MX210 UND MX230

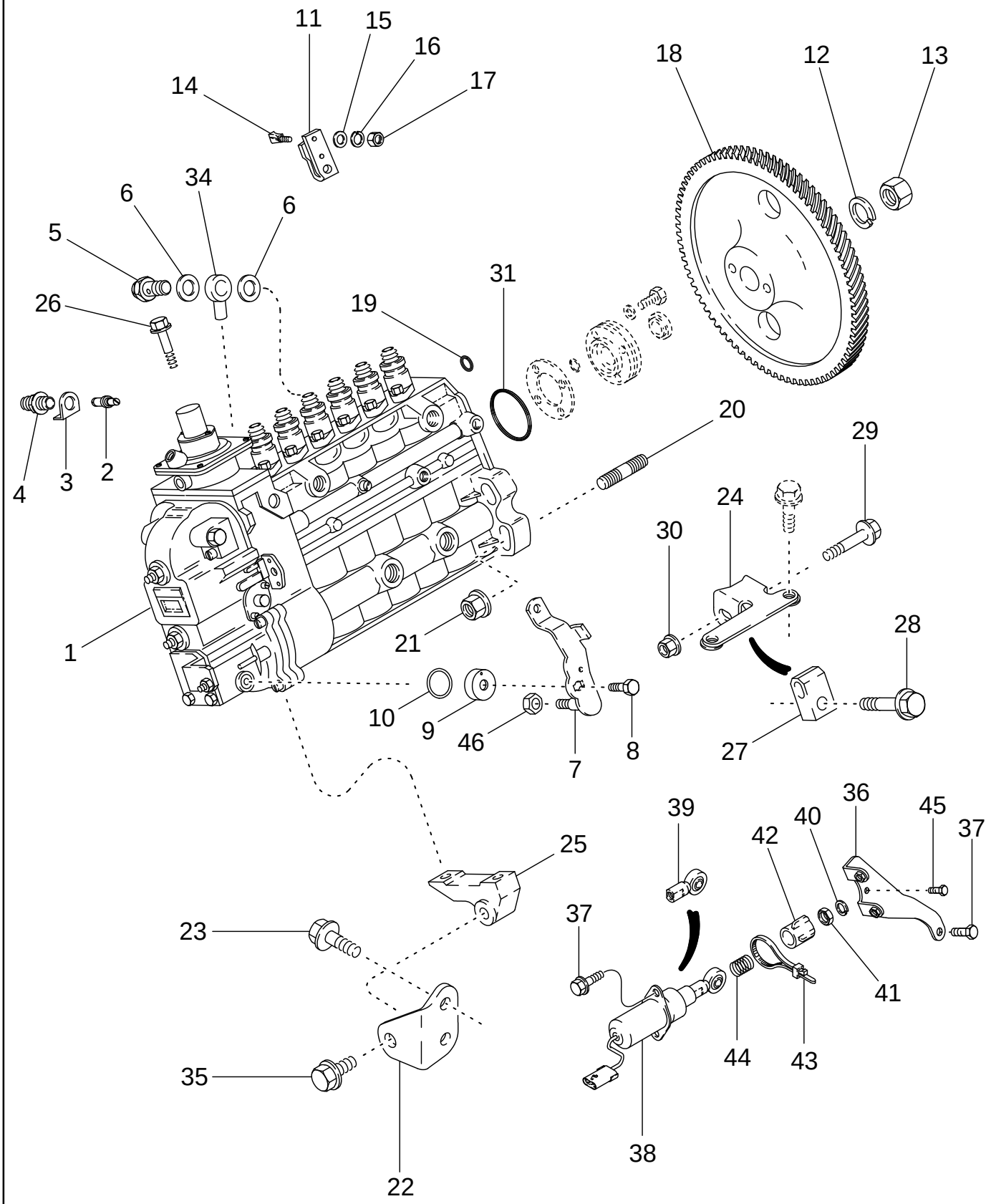

INYECCIÓN DE COMBUSTIBLE - BOMBA Y TRANSMISIÓN, MX210 Y MX230
INJECÇÃO DE COMBUSTÍVEL - BOMBA E TRANSMISSÃO, MODELOS MX210 E MX230
BRANDSTOFINSPUITING - POMP EN AANDRIJVING, MX210 EN MX230
BRÆNDSTOFINDSPRØJTNING - PUMPE OG DREV, MX210 OG MX230

R	N	P.N.	MOD	Q	Description Denominacion	Descrizione Denominação	Description Beschrijving	Bezeichnung Beskrivelse	L.C.
1	1	J938383		1	PUMP, FUEL INJECTION New, Inc. 2 - 17				
						POMPA INIEZIONE	POMPE INJECTION	EINSPRITZPUMPE	P895
					BOMBA DE INYECCION	BOMBA DE INJECCAO	INJECTIEPOMP	INDSPROEJTNINGSPUM	
1	2	86994167		1	PUMP, FUEL INJECTION New, Inc. 2 - 17				
						POMPA INIEZIONE	POMPE INJECTION	EINSPRITZPUMPE	P895
					BOMBA DE INYECCION	BOMBA DE INJECCAO	INJECTIEPOMP	INDSPROEJTNINGSPUM	
2		A77720		1	PIN, LARGE	SPINA, GRANDE	AXE, GROS	BOLZEN, GROSS	Z009
					BULON/PIN, LARGO	PINO LARGO	PIN, LARGE	STOR PIND	
3		J928981		1	WASHER, LOCK	ROSETTA DI SICUREZZA	RONDELLE FREIN	SPRENGRING	132R
					ARANDELA DE FRENO	ANILHA DE FIXACAO	VEERRING	LAASESKIVE	
4		J912888		1	PLUG	TAPPO	BOUCHON	STOPFEN	050T
					TAPÓN	BUJÃO	PLUG	PROP	
5		J932096		1	VALVE	VALVOLA	VALVE	VENTIL	P468
					VALVULA	VALVULA	VALVE	VALVE	
6		J918192		2	RING, PACKING 14 x 20 x 1 mm				
						ANELLO, DI RIEMPIM.	RONDELLE JOINT	DICHTRING	P614
					ARANDELA JUNTA	ARANDELA JUNTA	RING, PACKING	PAKNINGSRING	
7		J929322		1	LEVER	LEVA	LEVIER	HEBEL	045L
					PALANCA	ALAVANCA	HEFBOOM	HAANDTAG	
8		628-6016		1	SCREW M6 x 16; 10.9	VITE	VIS	SCHRAUBE	7450
					TORNILLO	PARAFUSO	SCHROEF	SKRUE	
9		691292C1		1	BUSHING	BOCCOLA	BAGUE	BUECHSE	095B
					CASQUILLO	CASQUILHO	LAGERBUS	BOESNING	
10		680187C1		1	O-RING	ANELLO TOROIDALE	JOINT THORIQUE	DICHTRING	055A
					JUNTA HERMETICA	O-RING	O-RING	O-RING	
11		1808728C1		1	LEVER	LEVA	LEVIER	HEBEL	045L
					PALANCA	ALAVANCA	HEFBOOM	HAANDTAG	
12		J920922		1	WASHER, LOCK	ROSETTA DI SICUREZZA	RONDELLE FREIN	SPRENGRING	132R
					ARANDELA DE FRENO	ANILHA DE FIXACAO	VEERRING	LAASESKIVE	
13		J920921		1	NUT M20 x 1,5	DADO	ECROU	MUTTER	010D
					TUERCA	PORCA	MOER	MØTRIK	
14		1808822C1		1	SCREW	VITE	VIS	SCHRAUBE	040V
					TORNILLO	PARAFUSO	SCHROEF	SKRUE	
15		895-11006		1	WASHER 6,6 x 12 x 1,6 mm	ROSETTA PIANA	RONDELLE	BEILAGSCHEIBE	131R
					ARANDELA	ANILHA	SLUITRING	FLADSKIVE	
16		892-11006		1	WASHER, LOCK M6	ROSETTA DI SICUREZZA	RONDELLE FREIN	SPRENGRING	132R
					ARANDELA DE FRENO	ANILHA DE FIXACAO	VEERRING	LAASESKIVE	
17		829-1306		1	NUT M6; 10	DADO	ECROU	MUTTER	5780
					TUERCA	PORCA	MOER	MØTRIK	
18		J931380		1	GEAR	INGRANAGGIO	PIGNON	ZAHNRAD	050I
					ENGRANAJE	CARRETO	TANDWIEL	TANDHJUL	
19		J926722		1	SEAL	ANELLO DI TENUTA	JOINT	DICHTUNG	132A
					ANILLO DE CIERRE	ANEL DE VEDACAO	DICHTINGSRING	PAKNINGSRING	
20		86991263		4	STUD 55 mm (2-5/32 in)	PRIGIONIERO	GOUJON	STEHBOLZEN	P521
					ESPARRAGO	PRISIONEIRO	STUD	STUD	
21		825-2410		4	NUT M10	DADO	ECROU	MUTTER	010D
					TUERCA	PORCA	MOER	MØTRIK	

(1) MX210
(2) MX230

FUEL INJECTION - PUMP AND DRIVE, MX210 AND MX230
INIEZIONE DEL COMBUSTIBILE - POMPA E TRASMISSIONE, MX210 E MX230
POMPE ET ENTRAÎNEMENT DE L'INJECTION DE CARBURANT, MX210 ET MX230
KRAFTSTOFF-EINSPRITZPUMPE UND PUMPENANTRIEB DER SERIEN MX210 UND MX230

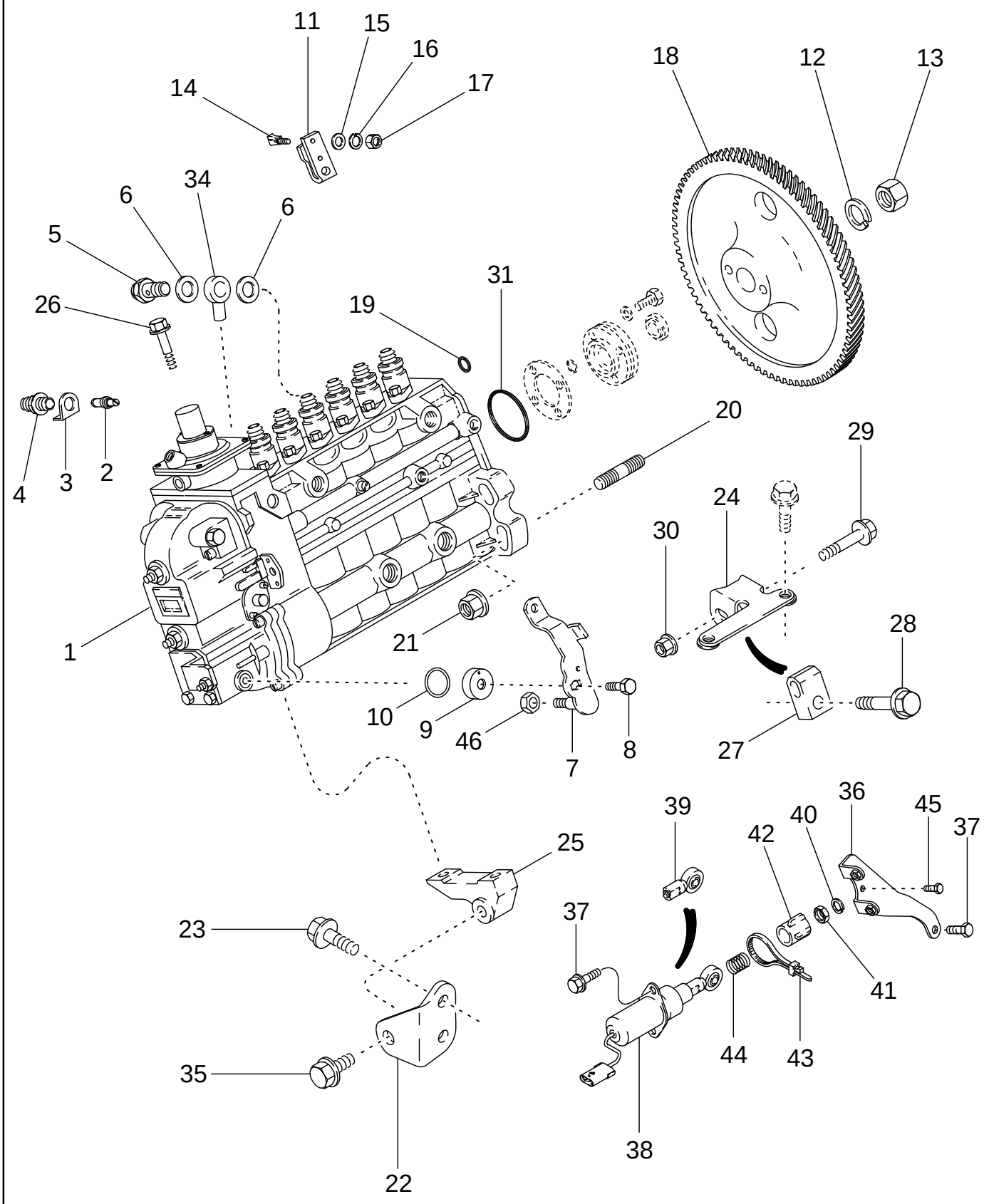

INYECCIÓN DE COMBUSTIBLE - BOMBA Y TRANSMISIÓN, MX210 Y MX230
INJECÇÃO DE COMBUSTÍVEL - BOMBA E TRANSMISSÃO, MODELOS MX210 E MX230
BRANDSTOFINSPUITING - POMP EN AANDRIJVING, MX210 EN MX230
BRÆNDSTOFINDSPRØJTNING - PUMPE OG DREV, MX210 OG MX230

R	N	P.N.	MOD	Q	Description Denominacion	Descrizione Denominação	Description Beschrijving	Bezeichnung Beskrivelse	L.C.
22		J938091		1	SUPPORT SOPORTE	SUPPORTO SUPORTE	SUPPORT STEUN	STÜTZE BESLAG	300S
23		844-10020		2	SCREW M10 x 20; 8,8 TORNILLO	VITE PARAFUSO	VIS SCHROEF	SCHRAUBE SKRUE	7450
24		J921357		1	HOLDER SOPORTE	SOSTEGNO SUPORTE	SUPPORT HOUDER	HALTER HOLDER	174S
25		J926273		1	SUPPORT SOPORTE	SUPPORTO SUPORTE	SUPPORT STEUN	STÜTZE BESLAG	300S
26		845-8090		2	SCREW M8 x 90 TORNILLO	VITE PARAFUSO	VIS SCHROEF	SCHRAUBE SKRUE	7450
27		J926781		1	SUPPORT SOPORTE	SUPPORTO SUPORTE	SUPPORT STEUN	STÜTZE BESLAG	300S
28		844-10040		1	SCREW M10 x 40; 8.8 TORNILLO	VITE PARAFUSO	VIS SCHROEF	SCHRAUBE SKRUE	040V
29		845-8045		1	SCREW M8 x 45 TORNILLO	VITE PARAFUSO	VIS SCHROEF	SCHRAUBE SKRUE	7450
30		J900589		1	NUT M8 TUERCA	DADO PORCA	ECROU MOER	MUTTER MØTRIK	010D
31		J924605		1	SEAL ANILLO DE CIERRE	ANELLO DI TENUTA ANEL DE VEDACAO	JOINT DICHTINGSRING	DICHTUNG PAKNINGSRING	132A
34		J935740		1	CONNECTOR CONECTOR	CONNESSIONE CONECTOR	CONNECTEUR VERBINDING	STECKVERBINDUNG ELI STIK	235C
35		J920622		1	SCREW M10 x 30 TORNILLO	VITE PARAFUSO	VIS SCHROEF	SCHRAUBE SKRUE	040V
36		J938467		1	BRACKET PIEZA DE SOPORTE	STAFFA BRACADEIRA	PATTE FIXATION STEUNBEUGEL	HALTERUNG BESLAG	225S
37		844-10020		3	SCREW M10 x 20; 8,8 TORNILLO	VITE PARAFUSO	VIS SCHROEF	SCHRAUBE SKRUE	7450
38		87403484		1	SOLENOID Includes 39 - 44 SOLENOIDE	SOLENOIDE SOLEMOID	SOLENOIDE SOLENOIDE	MAGNETSPULE, MECH. MAGNETVENTIL	168S
39		L53928		1	EYE OJO	OCCHIELLO OLHAL	OEIL EYE	AUGE EYE	3080
40		492-11025		1	WASHER, LOCK 1/4 ARANDELA DE FRENO	ROSETTA DI SICUREZZA ANILHA DE FIXACAO	RONDELLE FREIN VEERRING	SPRENGRING LAASESKIVE	132R
41		425-154		1	NUT 1/4 NF TUERCA	DADO PORCA	ECROU MOER	MUTTER MØTRIK	5780
42		J925171		1	BOOT CASQUETE	CUFFIA FOLE	COIFFE KABELDOORGANG	MANSCHETTE MANCHET	330C
43		473321C1		1	STRAP BANDA	BANDELLA BANDA	SANGLE RIEM	GURT STROP	532B
44		J923887		1	SPRING RESORTE	MOLLA MOLA	RESSORT VEER	FEDER FJEDER	100M
45		845-8020		1	SCREW M8 x 20; 8.8 TORNILLO	VITE PARAFUSO	VIS SCHROEF	SCHRAUBE SKRUE	7450
46		J930683		1	NUT, LOCK M5 CONTRA TUERCA	CONTRODADO CONTRA PORCA	CONTRE-ECROU NUT, LOCK	KONTERMUTTER NUT, LOCK	P263
47		97006C1		1	BOLT M6 x 20 (Not Shown) TORNILLO	BULLONE PARAFUSO	BOULON BOUT	SCHAUBENBOLZEN SKRUE	140B

FUEL INJECTION PUMP, MX255 AND MX285
POMPA DI INIEZIONE DEL COMBUSTIBILE, MX255 E MX285
POMPE D'INJECTION DE CARBURANT, MX255 ET MX285
KRAFTSTOFF-EINSPRITZPUMPE DER SERIEN MX255 UND MX285

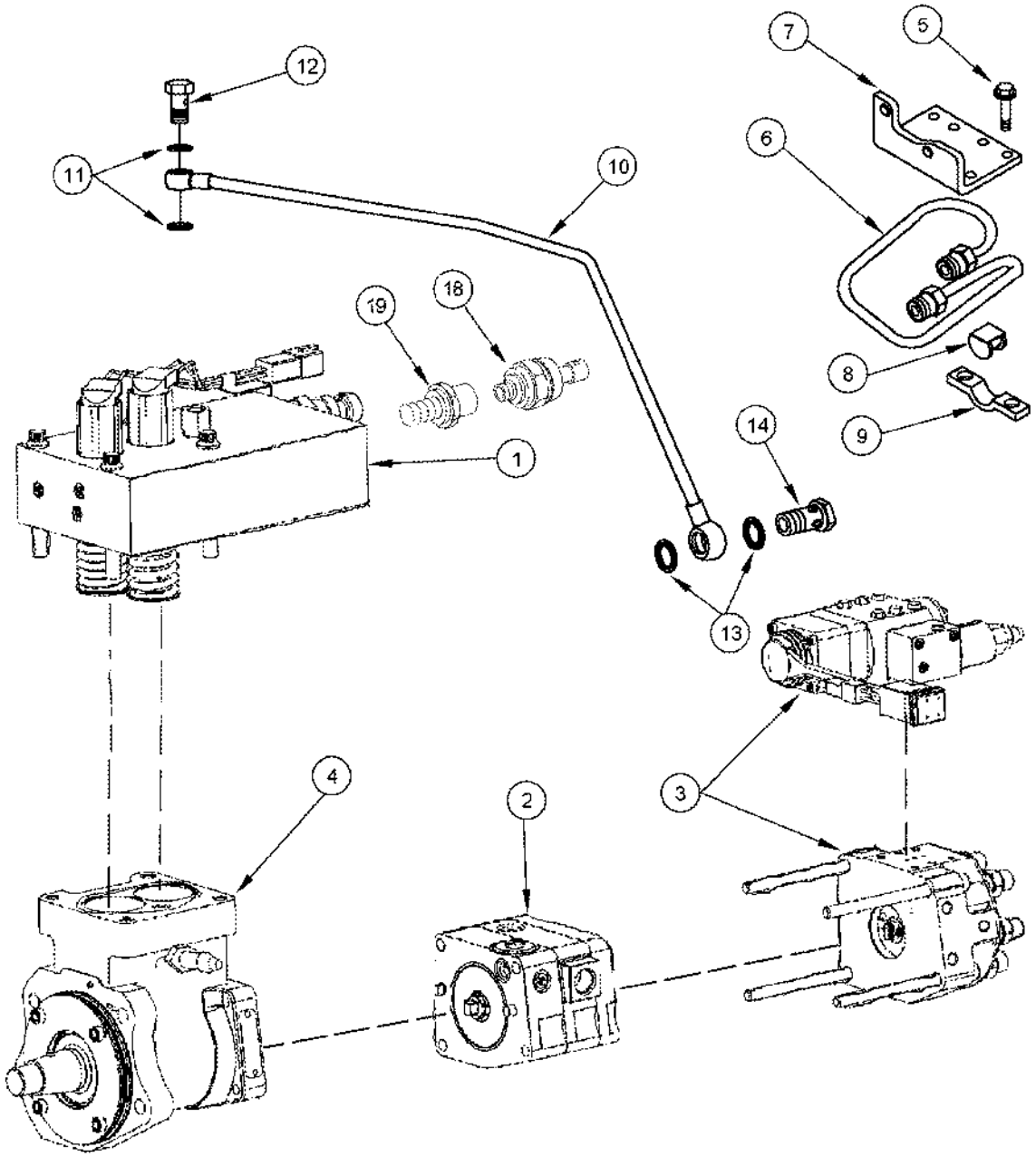

BOMBA DE INYECCIÓN DE COMBUSTIBLE, MX255 Y MX285
BOMBA DE INJECÇÃO DE COMBUSTÍVEL, MODELOS MX255 E MX285
BRANDSTOFINJECTIEPOMP, MX255 EN MX285
BRÆNDSTOFINDSPRØJTNINGSPUMPE, MX255 OG MX285

R	N	P.N.	MOD	Q	Description Denominacion	Descrizione Denominação	Description Beschrijving	Bezeichnung Beskrivelse	L.C.
		J4076442		1	PUMP, FUEL INJECTION Inc. 1 - 14				
						POMPA INIEZIONE	POMPE INJECTION	KRAFTSTOFFEINSPRITZ	158P
					BOMBA DE INYECCION	BOMBA DE INJECCAO	INJECTIEPOMP	INDSPROEJTNINGSPUM	
1	1	J4025319		1	KIT, REPAIR Accumulator	KIT RIPARAZIONE	COLIS DE RÉPARATION	REPARATURSATZ	003K
					JUEGO DE REPARACION	KIT REPARACAO	HERSTELKIT	REPARATIONSSAET	
2	2	J4089074		1	KIT, REPAIR Gear Pump	KIT RIPARAZIONE	COLIS DE RÉPARATION	REPARATURSATZ	003K
					JUEGO DE REPARACION	KIT REPARACAO	HERSTELKIT	REPARATIONSSAET	
3	3	J4010269		1	KIT, REPAIR Distributor	KIT RIPARAZIONE	COLIS DE RÉPARATION	REPARATURSATZ	003K
					JUEGO DE REPARACION	KIT REPARACAO	HERSTELKIT	REPARATIONSSAET	
4	4	A77928		1	KIT, REPAIR Cam Housing	KIT RIPARAZIONE	COLIS DE RÉPARATION	REPARATURSATZ	003K
					JUEGO DE REPARACION	KIT REPARACAO	HERSTELKIT	REPARATIONSSAET	
		A77932		1	KIT Fuel Supply, Inc. 5 - 9	CORREDO	KIT	SATZ	305C
					EQUIPO	KIT	KIT	UDSTYR	
5		NSS		8	NOT SERVICED SEPARATELY M6 x 20, Bolt, Special				
						NON FORNITO SEPARAT	NON FOURNI SEPAREMI	KEIN ERSATZTEIL	064N
					NO SE REPARA SEPARA	NOT SERVICED SEPARA	NIET ALLEEN VERKRIJG	NOT SERVICED SEPARA	
6		NSS		1	NOT SERVICED SEPARATELY Tube				
						NON FORNITO SEPARAT	NON FOURNI SEPAREMI	KEIN ERSATZTEIL	064N
					NO SE REPARA SEPARA	NOT SERVICED SEPARA	NIET ALLEEN VERKRIJG	NOT SERVICED SEPARA	
7		NSS		1	NOT SERVICED SEPARATELY Bracket				
						NON FORNITO SEPARAT	NON FOURNI SEPAREMI	KEIN ERSATZTEIL	064N
					NO SE REPARA SEPARA	NOT SERVICED SEPARA	NIET ALLEEN VERKRIJG	NOT SERVICED SEPARA	
8		NSS		4	NOT SERVICED SEPARATELY Isolator				
						NON FORNITO SEPARAT	NON FOURNI SEPAREMI	KEIN ERSATZTEIL	064N
					NO SE REPARA SEPARA	NOT SERVICED SEPARA	NIET ALLEEN VERKRIJG	NOT SERVICED SEPARA	
9		NSS		4	NOT SERVICED SEPARATELY Clamp				
						NON FORNITO SEPARAT	NON FOURNI SEPAREMI	KEIN ERSATZTEIL	064N
					NO SE REPARA SEPARA	NOT SERVICED SEPARA	NIET ALLEEN VERKRIJG	NOT SERVICED SEPARA	
10		J4010174		1	TUBE	TUBETTO	TUBE	SCHLAUCH	195T
					TUBO	TUBO	BUISJE	RØR	
11		J935170		2	WASHER, SPECIAL	RONDELLA SPECIALE	RONDELLE SPÉCIALE	SPEZIALSCHEIBE	Z333
					ARANDELA FRENO	ARRUELA ESPECIAL	CILINDERPAKKING. KOP	SPECIALSKIVE	
12		J918002		1	SCREW	VITE	VIS	SCHRAUBE	040V
					TORNILLO	PARAFUSO	SCHROEF	SKRUE	
13		J918192		2	RING, PACKING 14 x 20 x 1 mm				
						ANELLO, DI RIEMPIM.	RONDELLE JOINT	DICHTRING	P614
					ARANDELA JUNTA	ARANDELA JUNTA	RING, PACKING	PAKNINGSRING	
14		J4002006		1	SCREW	VITE	VIS	SCHRAUBE	040V
					TORNILLO	PARAFUSO	SCHROEF	SKRUE	
18		J4010051		1	SENDOR, TEMPERATURE				
						TRASMETTITORE, TEMP	THERMO SONDE	TEMPERATURGEBER	Z366
					TERMOSONDA	TERMOSONDA	SENDOR, TEMPERATUR	SENDER, TEMPERATUR	
19		J4010084		1	ADAPTER	ADATTATORE	ADAPTEUR	ADAPTER	001A
					ADAPTOR	ADAPTOR	VERLOOPSTUK	ADAPTER	

(1) See Figure 03-09
(2) See Figure 03-10
(3) See Figure 03-11
(4) See Figure 03-12

FUEL INJECTION PUMP, MX255 AND MX285
POMPA DI INIEZIONE DEL COMBUSTIBILE, MX255 E MX285
POMPE D'INJECTION DE CARBURANT, MX255 ET MX285
KRAFTSTOFF-EINSPRITZPUMPE DER SERIEN MX255 UND MX285

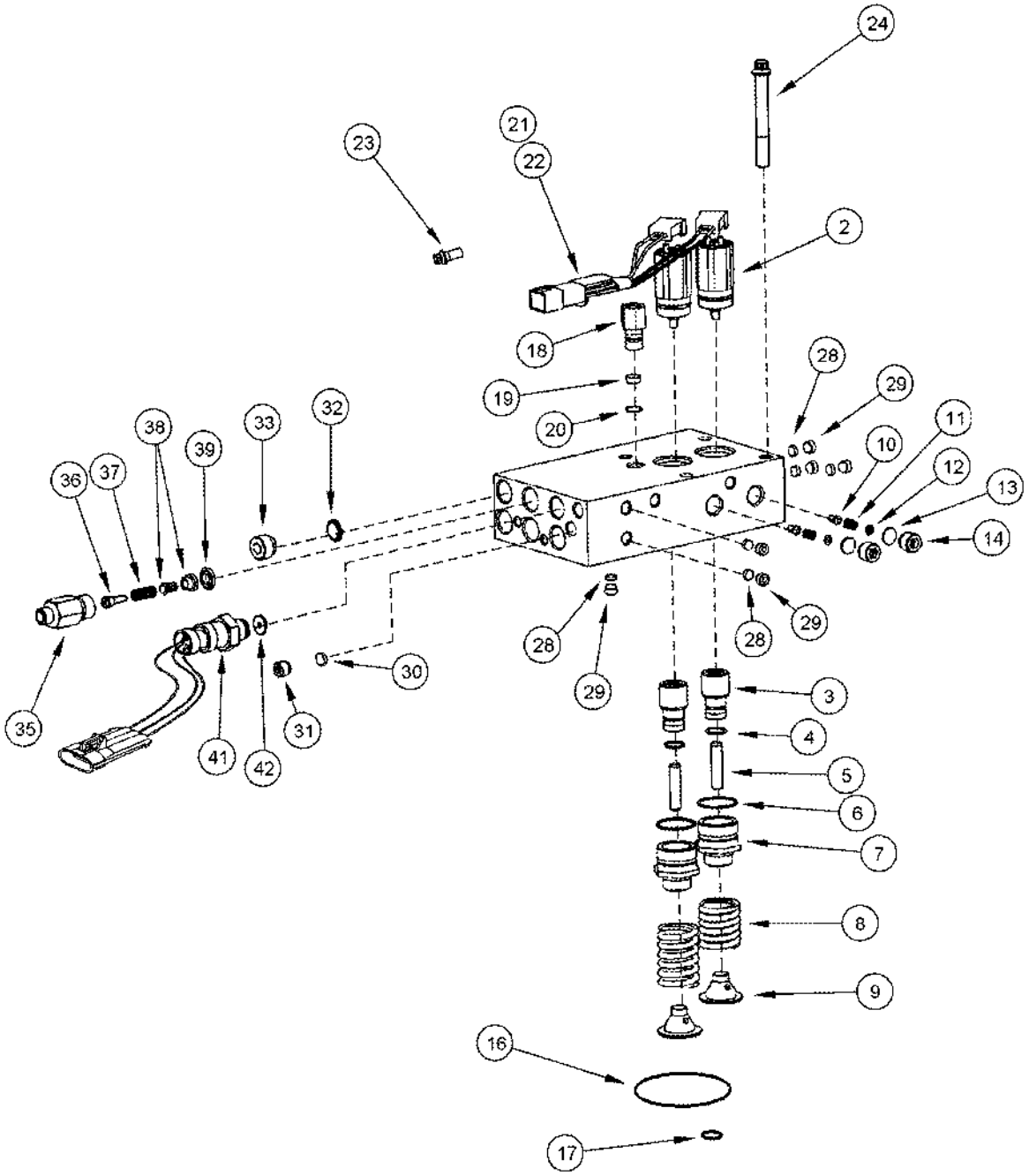

BOMBA DE INYECCIÓN DE COMBUSTIBLE, MX255 Y MX285
BOMBA DE INJECÇÃO DE COMBUSTÍVEL, MODELOS MX255 E MX285
BRANDSTOFINJECTIEPOMP, MX255 EN MX285
BRÆNDSTOFINDSPRØJTNINGSPUMPE, MX255 OG MX285

R	N	P.N.	MOD	Q	Description Denominacion	Descrizione Denominação	Description Beschrijving	Bezeichnung Beskrivelse	L.C.
		J4025319		1	KIT, REPAIR Accumulator, Inc. 1 - 42				
						KIT RIPARAZIONE	COLIS DE RÉPARATION	REPARATURSATZ	003K
					JUEGO DE REPARACION	KIT REPARACAO	HERSTELKIT	REPARATIONSSAET	
		JR4025319		1	KIT, REPAIR Accumulator, Remanufactured, N.A. Only				
						KIT RIPARAZIONE	COLIS DE RÉPARATION	REPARATURSATZ	003K
					JUEGO DE REPARACION	KIT REPARACAO	HERSTELKIT	REPARATIONSSAET	
		JC4025319		1	CORE-ACCUMULATOR Return Number				
						BATTERIA DA REVISION.	ACCUMULATEUR A REN	DRUCKSPEICHER ZU EF	T088
					ACCUMULATO A RENOV	CORE-ACCUMULATOR	CORE-ACCUMULATOR	CORE-ACCUMULATOR	
1		**NSS**		1	NOT SERVICED SEPARATELY Body				
						NON FORNITO SEPARAT	NON FOURNI SEPAREMI	KEIN ERSATZTEIL	064N
					NO SE REPARA SEPARA	NOT SERVICED SEPARA	NIET ALLEEN VERKRIJG	NOT SERVICED SEPARA	
2		**NSS**		2	NOT SERVICED SEPARATELY Valve, Solenoid				
						NON FORNITO SEPARAT	NON FOURNI SEPAREMI	KEIN ERSATZTEIL	064N
					NO SE REPARA SEPARA	NOT SERVICED SEPARA	NIET ALLEEN VERKRIJG	NOT SERVICED SEPARA	
3		**NSS**		2	NOT SERVICED SEPARATELY Tappet				
						NON FORNITO SEPARAT	NON FOURNI SEPAREMI	KEIN ERSATZTEIL	064N
					NO SE REPARA SEPARA	NOT SERVICED SEPARA	NIET ALLEEN VERKRIJG	NOT SERVICED SEPARA	
4		**NSS**		2	NOT SERVICED SEPARATELY Seal				
						NON FORNITO SEPARAT	NON FOURNI SEPAREMI	KEIN ERSATZTEIL	064N
					NO SE REPARA SEPARA	NOT SERVICED SEPARA	NIET ALLEEN VERKRIJG	NOT SERVICED SEPARA	
5		**NSS**		2	NOT SERVICED SEPARATELY Plunger				
						NON FORNITO SEPARAT	NON FOURNI SEPAREMI	KEIN ERSATZTEIL	064N
					NO SE REPARA SEPARA	NOT SERVICED SEPARA	NIET ALLEEN VERKRIJG	NOT SERVICED SEPARA	
6		**NSS**		2	NOT SERVICED SEPARATELY Seal				
						NON FORNITO SEPARAT	NON FOURNI SEPAREMI	KEIN ERSATZTEIL	064N
					NO SE REPARA SEPARA	NOT SERVICED SEPARA	NIET ALLEEN VERKRIJG	NOT SERVICED SEPARA	
7		**NSS**		2	NOT SERVICED SEPARATELY Retainer				
						NON FORNITO SEPARAT	NON FOURNI SEPAREMI	KEIN ERSATZTEIL	064N
					NO SE REPARA SEPARA	NOT SERVICED SEPARA	NIET ALLEEN VERKRIJG	NOT SERVICED SEPARA	
8		**NSS**		2	NOT SERVICED SEPARATELY Spring				
						NON FORNITO SEPARAT	NON FOURNI SEPAREMI	KEIN ERSATZTEIL	064N
					NO SE REPARA SEPARA	NOT SERVICED SEPARA	NIET ALLEEN VERKRIJG	NOT SERVICED SEPARA	
9		**NSS**		2	NOT SERVICED SEPARATELY Retainer				
						NON FORNITO SEPARAT	NON FOURNI SEPAREMI	KEIN ERSATZTEIL	064N
					NO SE REPARA SEPARA	NOT SERVICED SEPARA	NIET ALLEEN VERKRIJG	NOT SERVICED SEPARA	
10		**NSS**		2	NOT SERVICED SEPARATELY Plunger				
						NON FORNITO SEPARAT	NON FOURNI SEPAREMI	KEIN ERSATZTEIL	064N
					NO SE REPARA SEPARA	NOT SERVICED SEPARA	NIET ALLEEN VERKRIJG	NOT SERVICED SEPARA	
11		**NSS**		2	NOT SERVICED SEPARATELY Spring				
						NON FORNITO SEPARAT	NON FOURNI SEPAREMI	KEIN ERSATZTEIL	064N
					NO SE REPARA SEPARA	NOT SERVICED SEPARA	NIET ALLEEN VERKRIJG	NOT SERVICED SEPARA	
12		**NSS**		2	NOT SERVICED SEPARATELY Shim				
						NON FORNITO SEPARAT	NON FOURNI SEPAREMI	KEIN ERSATZTEIL	064N
					NO SE REPARA SEPARA	NOT SERVICED SEPARA	NIET ALLEEN VERKRIJG	NOT SERVICED SEPARA	
13		**NSS**		2	NOT SERVICED SEPARATELY Seat				
						NON FORNITO SEPARAT	NON FOURNI SEPAREMI	KEIN ERSATZTEIL	064N
					NO SE REPARA SEPARA	NOT SERVICED SEPARA	NIET ALLEEN VERKRIJG	NOT SERVICED SEPARA	

FUEL INJECTION PUMP, MX255 AND MX285
POMPA DI INIEZIONE DEL COMBUSTIBILE, MX255 E MX285
POMPE D'INJECTION DE CARBURANT, MX255 ET MX285
KRAFTSTOFF-EINSPRITZPUMPE DER SERIEN MX255 UND MX285

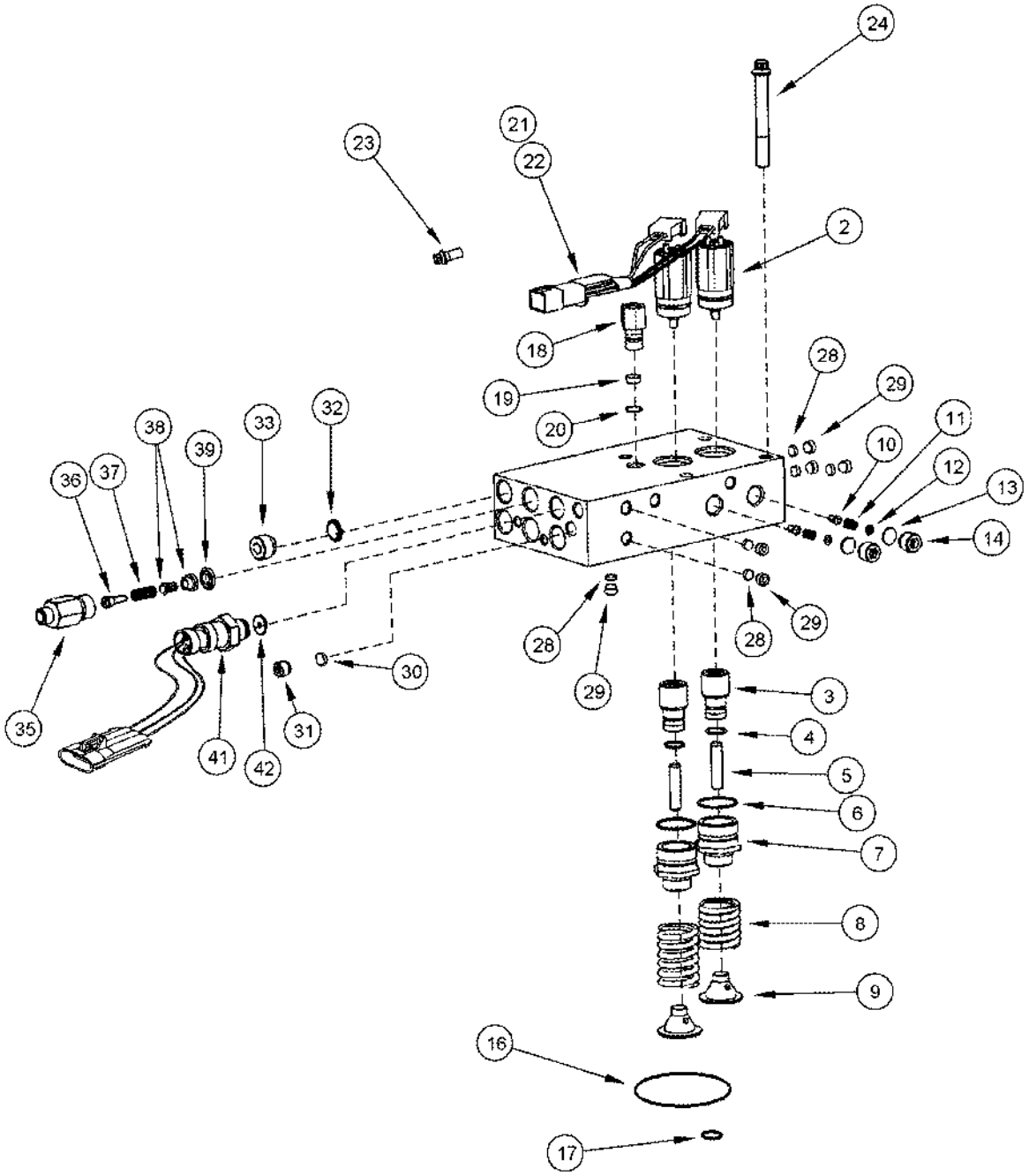

BOMBA DE INYECCIÓN DE COMBUSTIBLE, MX255 Y MX285
BOMBA DE INJECÇÃO DE COMBUSTÍVEL, MODELOS MX255 E MX285
BRANDSTOFINJECTIEPOMP, MX255 EN MX285
BRÆNDSTOFINDSPRØJTNINGSPUMPE, MX255 OG MX285

R	N	P.N.	MOD	Q	Description Denominacion	Descrizione Denominação	Description Beschrijving	Bezeichnung Beskrivelse	L.C.
14		NSS		2	NOT SERVICED SEPARATELY Plug				
						NON FORNITO SEPARAT	NON FOURNI SEPAREMI	KEIN ERSATZTEIL	064N
					NO SE REPARA SEPARA	NOT SERVICED SEPARA	NIET ALLEEN VERKRIJG	NOT SERVICED SEPARA	
16		J4010636		1	O-RING	ANELLO TOROIDALE	JOINT THORIQUE	DICHTRING	055A
					JUNTA HERMETICA	O-RING	O-RING	O-RING	
17		J867640		1	O-RING	ANELLO TOROIDALE	JOINT THORIQUE	DICHTRING	055A
					JUNTA HERMETICA	O-RING	O-RING	O-RING	
18		J347925		1	CONNECTOR Drain, Inc. 19	CONNESSIONE	CONNECTEUR	STECKVERBINDUNG ELI	235C
					CONECTOR	CONECTOR	VERBINDING	STIK	
19		NSS		1	NOT SERVICED SEPARATELY Screen				
						NON FORNITO SEPARAT	NON FOURNI SEPAREMI	KEIN ERSATZTEIL	064N
					NO SE REPARA SEPARA	NOT SERVICED SEPARA	NIET ALLEEN VERKRIJG	NOT SERVICED SEPARA	
20		J867043		1	SEAL	ANELLO DI TENUTA	JOINT	DICHTUNG	132A
					ANILLO DE CIERRE	ANEL DE VEDACAO	DICHTINGSRING	PAKNINGSRING	
21		J417161		1	HARNESS Inc. 22	CABLAGGIO	FAISCEAU	KABELSTRANG	4160
					HAZ	CHICOTE	HARNESS	HARNESS	
22		J417095		1	CLIP, CABLE	ANCORAGGIO	ATTACHE-CABLE	KABELSCHELLE	P656
					UNION CABLE	GRAMPO	CLIP, CABLE	CLIP, CABLE	
23		NSS		1	NOT SERVICED SEPARATELY Bolt				
						NON FORNITO SEPARAT	NON FOURNI SEPAREMI	KEIN ERSATZTEIL	064N
					NO SE REPARA SEPARA	NOT SERVICED SEPARA	NIET ALLEEN VERKRIJG	NOT SERVICED SEPARA	
24		J331002		4	SCREW	VITE	VIS	SCHRAUBE	040V
					TORNILLO	PARAFUSO	SCHROEF	SKRUE	
		A77966		6	KIT Inc. 28, 29	KIT	POCHETTE	PACKUNG	4830
					JEUGO	JOGO	KIT	KIT	
28		NSS		1	NOT SERVICED SEPARATELY Seal				
						NON FORNITO SEPARAT	NON FOURNI SEPAREMI	KEIN ERSATZTEIL	064N
					NO SE REPARA SEPARA	NOT SERVICED SEPARA	NIET ALLEEN VERKRIJG	NOT SERVICED SEPARA	
29		NSS		1	NOT SERVICED SEPARATELY Plug				
						NON FORNITO SEPARAT	NON FOURNI SEPAREMI	KEIN ERSATZTEIL	064N
					NO SE REPARA SEPARA	NOT SERVICED SEPARA	NIET ALLEEN VERKRIJG	NOT SERVICED SEPARA	
30		NSS		1	NOT SERVICED SEPARATELY Seal				
						NON FORNITO SEPARAT	NON FOURNI SEPAREMI	KEIN ERSATZTEIL	064N
					NO SE REPARA SEPARA	NOT SERVICED SEPARA	NIET ALLEEN VERKRIJG	NOT SERVICED SEPARA	
31		NSS		1	NOT SERVICED SEPARATELY Plug				
						NON FORNITO SEPARAT	NON FOURNI SEPAREMI	KEIN ERSATZTEIL	064N
					NO SE REPARA SEPARA	NOT SERVICED SEPARA	NIET ALLEEN VERKRIJG	NOT SERVICED SEPARA	
		A77968		4	KIT Inc. 32, 33	KIT	POCHETTE	PACKUNG	4830
					JEUGO	JOGO	KIT	KIT	
32		NSS		1	NOT SERVICED SEPARATELY Seal				
						NON FORNITO SEPARAT	NON FOURNI SEPAREMI	KEIN ERSATZTEIL	064N
					NO SE REPARA SEPARA	NOT SERVICED SEPARA	NIET ALLEEN VERKRIJG	NOT SERVICED SEPARA	
33		NSS		1	NOT SERVICED SEPARATELY Plug				
						NON FORNITO SEPARAT	NON FOURNI SEPAREMI	KEIN ERSATZTEIL	064N
					NO SE REPARA SEPARA	NOT SERVICED SEPARA	NIET ALLEEN VERKRIJG	NOT SERVICED SEPARA	
		J4010544		1	ADJUSTER Inc. 35 - 39	REGOLATORE	REGLEUR	EINSTELLVORRICHTING	118A
					REGULADOR	REGULADOR	REGELAPPARAAT	JUSTERER	

FUEL INJECTION PUMP, MX255 AND MX285
POMPA DI INIEZIONE DEL COMBUSTIBILE, MX255 E MX285
POMPE D'INJECTION DE CARBURANT, MX255 ET MX285
KRAFTSTOFF-EINSPRITZPUMPE DER SERIEN MX255 UND MX285

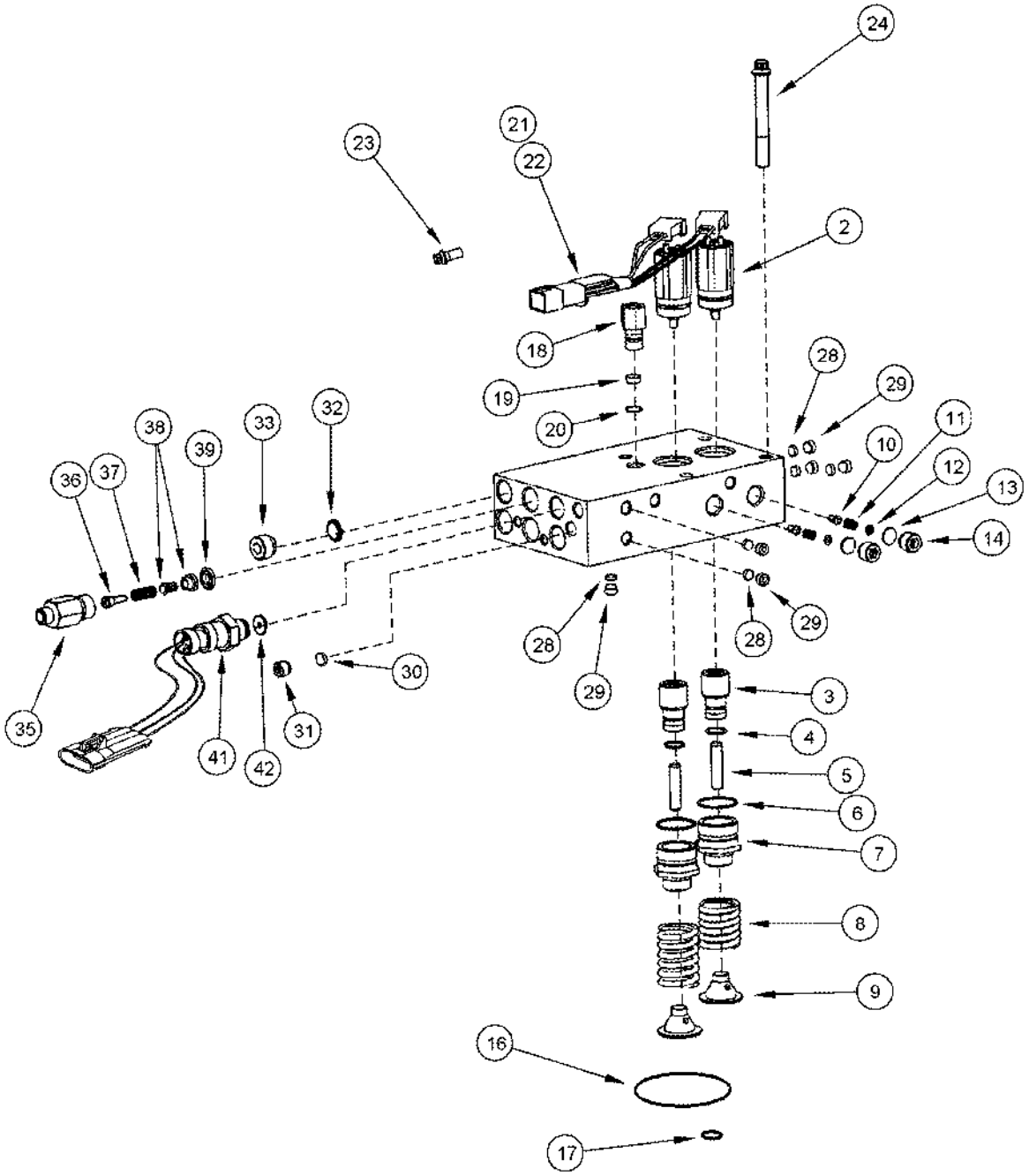

BOMBA DE INYECCIÓN DE COMBUSTIBLE, MX255 Y MX285
BOMBA DE INJECÇÃO DE COMBUSTÍVEL, MODELOS MX255 E MX285
BRANDSTOFINJECTIEPOMP, MX255 EN MX285
BRÆNDSTOFINDSPRØJTNINGSPUMPE, MX255 OG MX285

R	N	P.N.	MOD	Q	Description Denominacion	Descrizione Denominação	Description Beschrijving	Bezeichnung Beskrivelse	L.C.
35		NSS		1	NOT SERVICED SEPARATELY Adapter				
						NON FORNITO SEPARAT	NON FOURNI SEPAREMI	KEIN ERSATZTEIL	064N
					NO SE REPARA SEPARA	NOT SERVICED SEPARA	NIET ALLEEN VERKRIJG	NOT SERVICED SEPARA	
36		NSS		1	NOT SERVICED SEPARATELY Guide				
						NON FORNITO SEPARAT	NON FOURNI SEPAREMI	KEIN ERSATZTEIL	064N
					NO SE REPARA SEPARA	NOT SERVICED SEPARA	NIET ALLEEN VERKRIJG	NOT SERVICED SEPARA	
37		NSS		1	NOT SERVICED SEPARATELY Spring				
						NON FORNITO SEPARAT	NON FOURNI SEPAREMI	KEIN ERSATZTEIL	064N
					NO SE REPARA SEPARA	NOT SERVICED SEPARA	NIET ALLEEN VERKRIJG	NOT SERVICED SEPARA	
38		NSS		1	NOT SERVICED SEPARATELY Seat, Valve				
						NON FORNITO SEPARAT	NON FOURNI SEPAREMI	KEIN ERSATZTEIL	064N
					NO SE REPARA SEPARA	NOT SERVICED SEPARA	NIET ALLEEN VERKRIJG	NOT SERVICED SEPARA	
39		J4001869		1	SEAL	ANELLO DI TENUTA	JOINT	DICHTUNG	132A
					ANILLO DE CIERRE	ANEL DE VEDACAO	DICHTINGSRING	PAKNINGSRING	
		J4025130		1	KIT Pressure Sensing, Inc. 41, 42				
						KIT	POCHETTE	PACKUNG	4830
					JEUGO	JOGO	KIT	KIT	
41		NSS		1	NOT SERVICED SEPARATELY Sensor				
						NON FORNITO SEPARAT	NON FOURNI SEPAREMI	KEIN ERSATZTEIL	064N
					NO SE REPARA SEPARA	NOT SERVICED SEPARA	NIET ALLEEN VERKRIJG	NOT SERVICED SEPARA	
42		J4076375		1	SEAL	ANELLO DI TENUTA	JOINT	DICHTUNG	132A
					ANILLO DE CIERRE	ANEL DE VEDACAO	DICHTINGSRING	PAKNINGSRING	

FUEL INJECTION PUMP, MX255 AND MX285
POMPA DI INIEZIONE DEL COMBUSTIBILE, MX255 E MX285
POMPE D'INJECTION DE CARBURANT, MX255 ET MX285
KRAFTSTOFF-EINSPRITZPUMPE DER SERIEN MX255 UND MX285

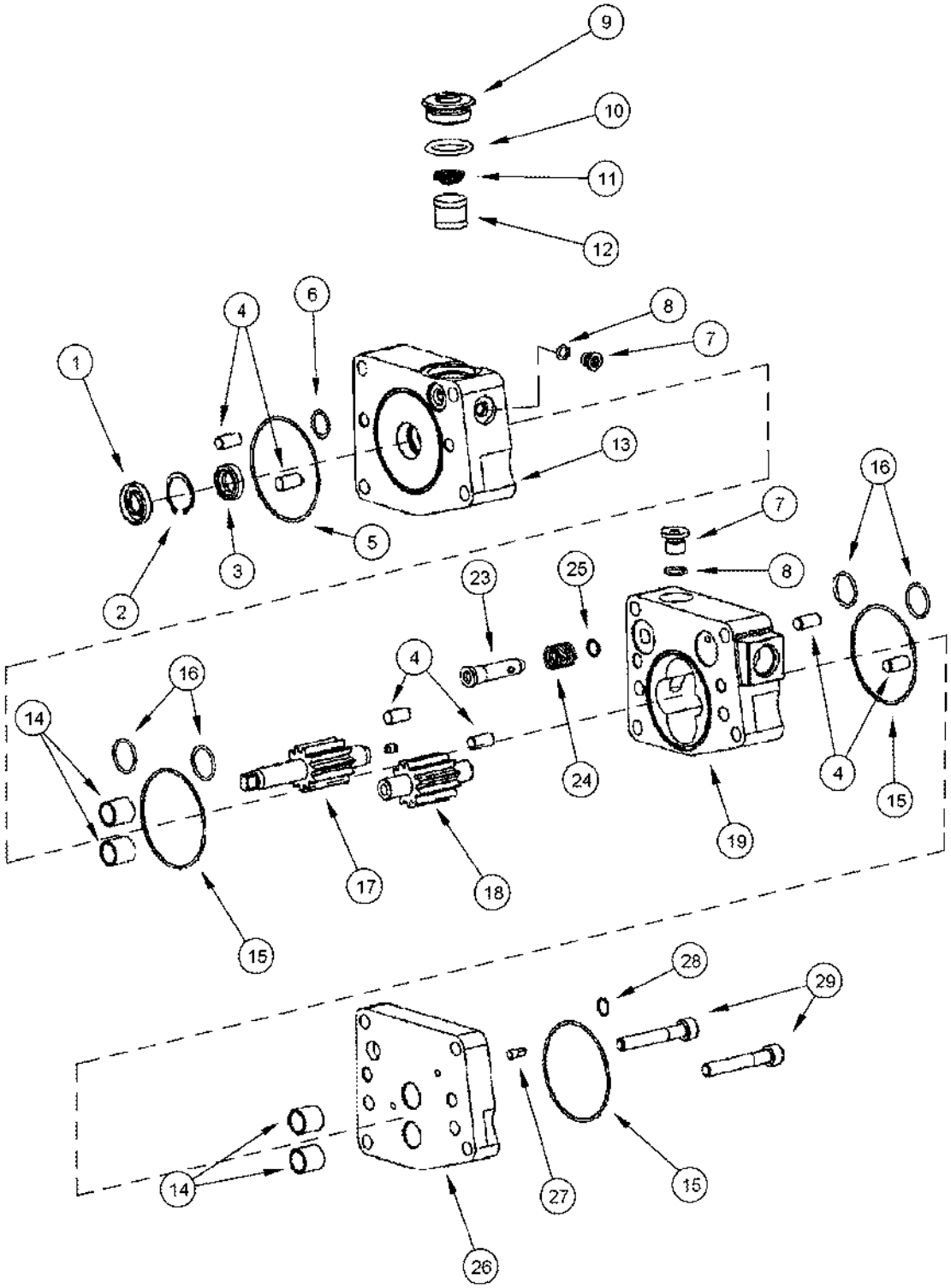

BOMBA DE INYECCIÓN DE COMBUSTIBLE, MX255 Y MX285
BOMBA DE INJECÇÃO DE COMBUSTÍVEL, MODELOS MX255 E MX285
BRANDSTOFINJECTIEPOMP, MX255 EN MX285
BRÆNDSTOFINDSPRØJTNINGSPUMPE, MX255 OG MX285

R	N	P.N.	MOD	Q	Description Denominacion	Descrizione Denominação	Description Beschrijving	Bezeichnung Beskrivelse	L.C.
		J4089074		1	KIT, REPAIR Gear Pump, Inc. 1 - 29				
						KIT RIPARAZIONE	COLIS DE RÉPARATION	REPARATURSATZ	003K
					JUEGO DE REPARACION	KIT REPARACAO	HERSTELKIT	REPARATIONSSAET	
1		NSS		1	NOT SERVICED SEPARATELY Seal				
						NON FORNITO SEPARAT	NON FOURNI SEPAREMI	KEIN ERSATZTEIL	064N
					NO SE REPARA SEPARA	NOT SERVICED SEPARA	NIET ALLEEN VERKRIJG	NOT SERVICED SEPARA	
2		NSS		1	NOT SERVICED SEPARATELY Ring, Retaining				
						NON FORNITO SEPARAT	NON FOURNI SEPAREMI	KEIN ERSATZTEIL	064N
					NO SE REPARA SEPARA	NOT SERVICED SEPARA	NIET ALLEEN VERKRIJG	NOT SERVICED SEPARA	
3		NSS		1	NOT SERVICED SEPARATELY Seal				
						NON FORNITO SEPARAT	NON FOURNI SEPAREMI	KEIN ERSATZTEIL	064N
					NO SE REPARA SEPARA	NOT SERVICED SEPARA	NIET ALLEEN VERKRIJG	NOT SERVICED SEPARA	
4		NSS		6	NOT SERVICED SEPARATELY Pin, Dowel				
						NON FORNITO SEPARAT	NON FOURNI SEPAREMI	KEIN ERSATZTEIL	064N
					NO SE REPARA SEPARA	NOT SERVICED SEPARA	NIET ALLEEN VERKRIJG	NOT SERVICED SEPARA	
5		J867642		1	O-RING	ANELLO TOROIDALE	JOINT THORIQUE	DICHTRING	055A
					JUNTA HERMETICA	O-RING	O-RING	O-RING	
6		J867641		1	O-RING	ANELLO TOROIDALE	JOINT THORIQUE	DICHTRING	055A
					JUNTA HERMETICA	O-RING	O-RING	O-RING	
7		J678610		2	PLUG Inc. 8	TAPPO	BOUCHON	STOPFEN	050T
					TAPÓN	BUJÃO	PLUG	PROP	
8		J678603		1	O-RING 9,3 mm ID x 2,2 mr	ANELLO TOROIDALE	JOINT THORIQUE	DICHTRING	055A
					JUNTA HERMETICA	O-RING	O-RING	O-RING	
9		J4009979		1	CAP	TAPPO SERBATOIO	CHAPEAU	KAPPE	052T
					TAPON DEL DEPOSITO	TAMPAO DE RESERVAT	RESERVOIRDOP	TANKDAEKSEL	
10		237-8012		1	O-RING 3/4 OD	ANELLO TOROIDALE	JOINT TORIQUE	O-RING	7176
					JUNTA HERMETICA	ANEL O	O-RING	O-RING	
11		J70700		1	SPRING	MOLLA	RESSORT	FEDER	100M
					RESORTE	MOLA	VEER	FJEDER	
12		J146483		1	SCREEN Filter	VAGLIO	TAMIS	SIEB	P584
					CERNIDOR (CONJUNTO	TELA	SCREEN	SCREEN	
13		NSS		1	NOT SERVICED SEPARATELY Cover				
						NON FORNITO SEPARAT	NON FOURNI SEPAREMI	KEIN ERSATZTEIL	064N
					NO SE REPARA SEPARA	NOT SERVICED SEPARA	NIET ALLEEN VERKRIJG	NOT SERVICED SEPARA	
14		NSS		4	NOT SERVICED SEPARATELY Bushing				
						NON FORNITO SEPARAT	NON FOURNI SEPAREMI	KEIN ERSATZTEIL	064N
					NO SE REPARA SEPARA	NOT SERVICED SEPARA	NIET ALLEEN VERKRIJG	NOT SERVICED SEPARA	
15		J867645		3	O-RING	ANELLO TOROIDALE	JOINT THORIQUE	DICHTRING	055A
					JUNTA HERMETICA	O-RING	O-RING	O-RING	
16		J3066914		4	O-RING	ANELLO TOROIDALE	JOINT THORIQUE	DICHTRING	055A
					JUNTA HERMETICA	O-RING	O-RING	O-RING	
17		NSS		1	NOT SERVICED SEPARATELY Shaft, Drive				
						NON FORNITO SEPARAT	NON FOURNI SEPAREMI	KEIN ERSATZTEIL	064N
					NO SE REPARA SEPARA	NOT SERVICED SEPARA	NIET ALLEEN VERKRIJG	NOT SERVICED SEPARA	
18		NSS		1	NOT SERVICED SEPARATELY Shaft				
						NON FORNITO SEPARAT	NON FOURNI SEPAREMI	KEIN ERSATZTEIL	064N
					NO SE REPARA SEPARA	NOT SERVICED SEPARA	NIET ALLEEN VERKRIJG	NOT SERVICED SEPARA	

FUEL INJECTION PUMP, MX255 AND MX285
POMPA DI INIEZIONE DEL COMBUSTIBILE, MX255 E MX285
POMPE D'INJECTION DE CARBURANT, MX255 ET MX285
KRAFTSTOFF-EINSPRITZPUMPE DER SERIEN MX255 UND MX285

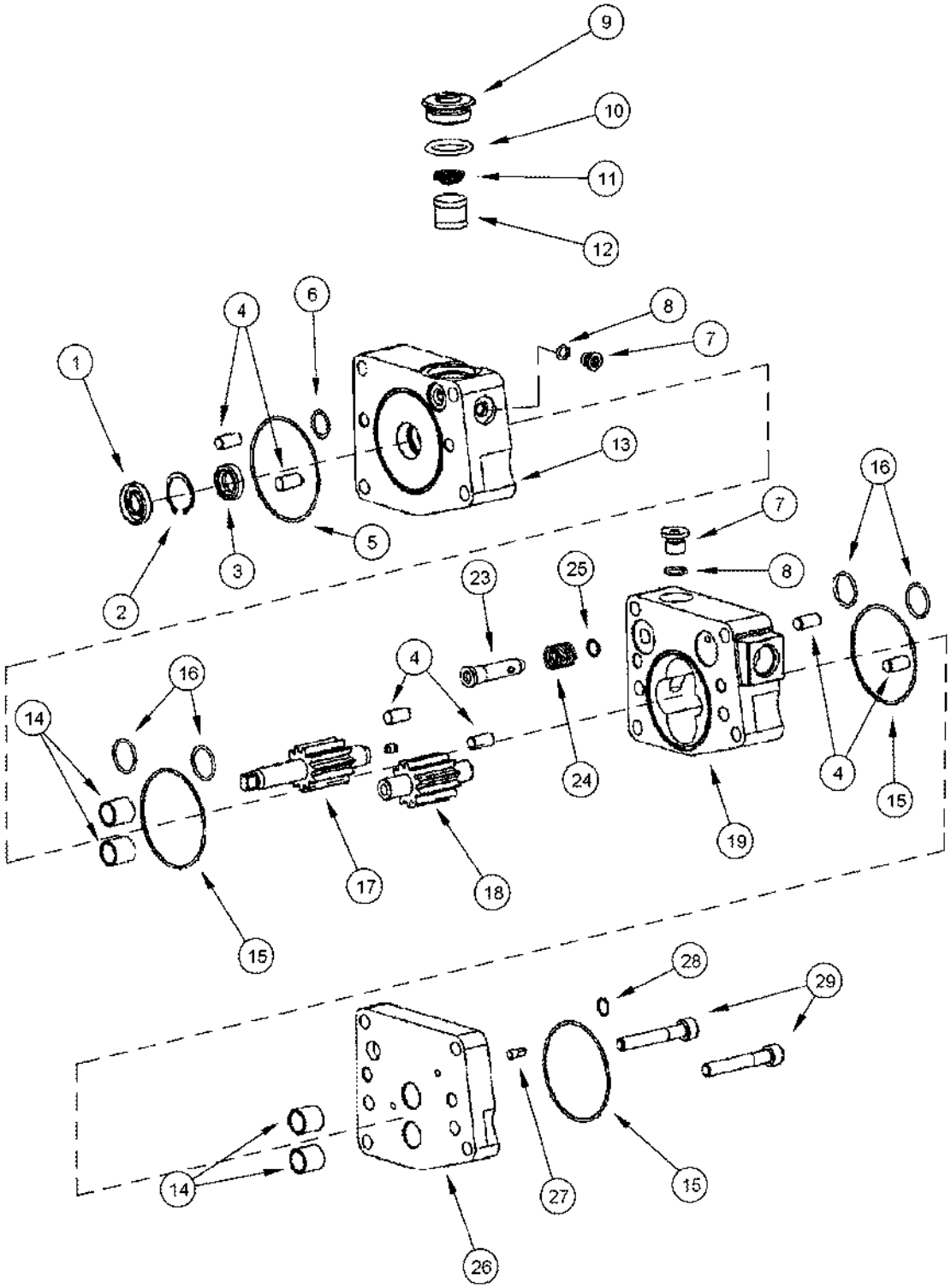

BOMBA DE INYECCIÓN DE COMBUSTIBLE, MX255 Y MX285
BOMBA DE INJECÇÃO DE COMBUSTÍVEL, MODELOS MX255 E MX285
BRANDSTOFINJECTIEPOMP, MX255 EN MX285
BRÆNDSTOFINDSPRØJTNINGSPUMPE, MX255 OG MX285

R	N	P.N.	MOD	Q	Description Denominacion	Descrizione Denominação	Description Beschrijving	Bezeichnung Beskrivelse	L.C.
19		NSS		1	NOT SERVICED SEPARATELY Housing				
						NON FORNITO SEPARAT	NON FOURNI SEPAREMI	KEIN ERSATZTEIL	064N
					NO SE REPARA SEPARA	NOT SERVICED SEPARA	NIET ALLEEN VERKRIJG	NOT SERVICED SEPARA	
		A77972		1	KIT Plunger, Inc. 23 - 25	CORREDO	KIT	SATZ	305C
					EQUIPO	KIT	KIT	UDSTYR	
23		NSS		1	NOT SERVICED SEPARATELY Plunger				
						NON FORNITO SEPARAT	NON FOURNI SEPAREMI	KEIN ERSATZTEIL	064N
					NO SE REPARA SEPARA	NOT SERVICED SEPARA	NIET ALLEEN VERKRIJG	NOT SERVICED SEPARA	
24		NSS		1	NOT SERVICED SEPARATELY Spring				
						NON FORNITO SEPARAT	NON FOURNI SEPAREMI	KEIN ERSATZTEIL	064N
					NO SE REPARA SEPARA	NOT SERVICED SEPARA	NIET ALLEEN VERKRIJG	NOT SERVICED SEPARA	
25		NSS		1	NOT SERVICED SEPARATELY Ring, Retaining				
						NON FORNITO SEPARAT	NON FOURNI SEPAREMI	KEIN ERSATZTEIL	064N
					NO SE REPARA SEPARA	NOT SERVICED SEPARA	NIET ALLEEN VERKRIJG	NOT SERVICED SEPARA	
26		NSS		1	NOT SERVICED SEPARATELY Cover				
						NON FORNITO SEPARAT	NON FOURNI SEPAREMI	KEIN ERSATZTEIL	064N
					NO SE REPARA SEPARA	NOT SERVICED SEPARA	NIET ALLEEN VERKRIJG	NOT SERVICED SEPARA	
27		NSS		1	NOT SERVICED SEPARATELY Pin				
						NON FORNITO SEPARAT	NON FOURNI SEPAREMI	KEIN ERSATZTEIL	064N
					NO SE REPARA SEPARA	NOT SERVICED SEPARA	NIET ALLEEN VERKRIJG	NOT SERVICED SEPARA	
28		J867480		1	O-RING	ANELLO TOROIDALE	JOINT THORIQUE	DICHTRING	055A
					JUNTA HERMETICA	O-RING	O-RING	O-RING	
29		NSS		2	NOT SERVICED SEPARATELY Bolt				
						NON FORNITO SEPARAT	NON FOURNI SEPAREMI	KEIN ERSATZTEIL	064N
					NO SE REPARA SEPARA	NOT SERVICED SEPARA	NIET ALLEEN VERKRIJG	NOT SERVICED SEPARA	

FUEL INJECTION PUMP, MX255 AND MX285
POMPA DI INIEZIONE DEL COMBUSTIBILE, MX255 E MX285
POMPE D'INJECTION DE CARBURANT, MX255 ET MX285
KRAFTSTOFF-EINSPRITZPUMPE DER SERIEN MX255 UND MX285

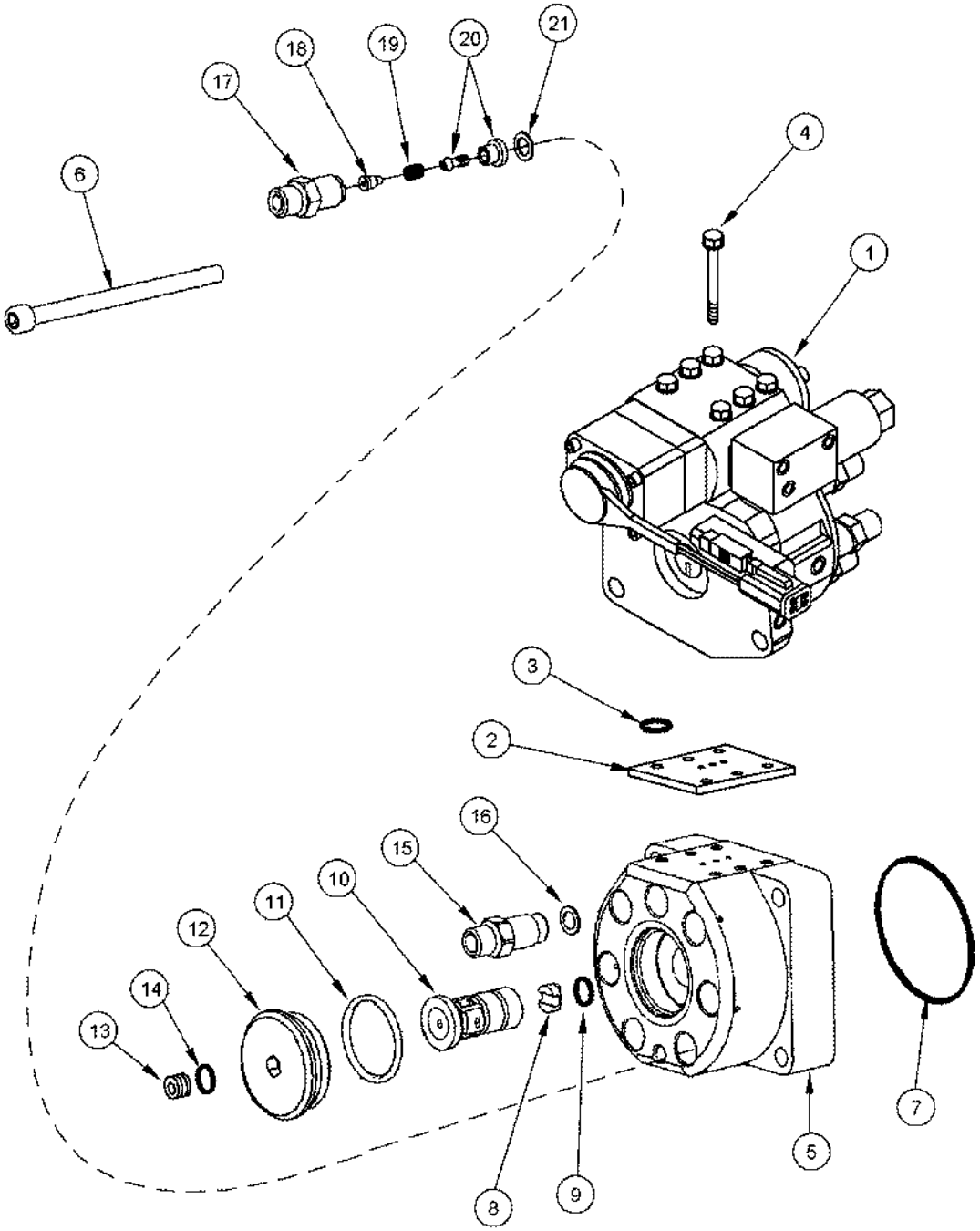

BOMBA DE INYECCIÓN DE COMBUSTIBLE, MX255 Y MX285
BOMBA DE INJECÇÃO DE COMBUSTÍVEL, MODELOS MX255 E MX285
BRANDSTOFINJECTIEPOMP, MX255 EN MX285
BRÆNDSTOFINDSPRØJTNINGSPUMPE, MX255 OG MX285

R	N	P.N.	MOD	Q	Description Denominacion	Descrizione Denominação	Description Beschrijving	Bezeichnung Beskrivelse	L.C.
		J4010269		1	KIT, REPAIR Distributor, Inc. 1 - 21				
						KIT RIPARAZIONE	COLIS DE RÉPARATION	REPARATURSATZ	003K
					JUEGO DE REPARACION	KIT REPARACAO	HERSTELKIT	REPARATIONSSAET	
1		NSS		1	NOT SERVICED SEPARATELY Valve, Control, Order Distributor Kit or Equalizer Kit				
						NON FORNITO SEPARAT	NON FOURNI SEPAREMI	KEIN ERSATZTEIL	064N
					NO SE REPARA SEPARA	NOT SERVICED SEPARA	NIET ALLEEN VERKRIJG	NOT SERVICED SEPARA	
		87440896		1	KIT Distributor	CORREDO	KIT	SATZ	305C
					EQUIPO	KIT	KIT	UDSTYR	
		87440895		1	KIT Equalizer, ICV	CORREDO	KIT	SATZ	305C
					EQUIPO	KIT	KIT	UDSTYR	
		87442224		1	KIT Stator, Inc. 2 - 21	CORREDO	KIT	SATZ	305C
					EQUIPO	KIT	KIT	UDSTYR	
2		NSS		1	NOT SERVICED SEPARATELY Gasket, Mounting				
						NON FORNITO SEPARAT	NON FOURNI SEPAREMI	KEIN ERSATZTEIL	064N
					NO SE REPARA SEPARA	NOT SERVICED SEPARA	NIET ALLEEN VERKRIJG	NOT SERVICED SEPARA	
3		NSS		1	NOT SERVICED SEPARATELY Seal				
						NON FORNITO SEPARAT	NON FOURNI SEPAREMI	KEIN ERSATZTEIL	064N
					NO SE REPARA SEPARA	NOT SERVICED SEPARA	NIET ALLEEN VERKRIJG	NOT SERVICED SEPARA	
4		NSS		6	NOT SERVICED SEPARATELY Bolt				
						NON FORNITO SEPARAT	NON FOURNI SEPAREMI	KEIN ERSATZTEIL	064N
					NO SE REPARA SEPARA	NOT SERVICED SEPARA	NIET ALLEEN VERKRIJG	NOT SERVICED SEPARA	
5		NSS		1	NOT SERVICED SEPARATELY Housing				
						NON FORNITO SEPARAT	NON FOURNI SEPAREMI	KEIN ERSATZTEIL	064N
					NO SE REPARA SEPARA	NOT SERVICED SEPARA	NIET ALLEEN VERKRIJG	NOT SERVICED SEPARA	
6		J347941		4	SCREW	VITE	VIS	SCHRAUBE	040V
					TORNILLO	PARAFUSO	SCHROEF	SKRUE	
7		J867645		2	O-RING	ANELLO TOROIDALE	JOINT THORIQUE	DICHTRING	055A
					JUNTA HERMETICA	O-RING	O-RING	O-RING	
8		J867480		1	O-RING	ANELLO TOROIDALE	JOINT THORIQUE	DICHTRING	055A
					JUNTA HERMETICA	O-RING	O-RING	O-RING	
9		J330644		1	HUB	MOZZO	MOYEU	NABE	135M
					CUBO	CUBO	NAAF	NAV	
10		NSS		1	NOT SERVICED SEPARATELY Shaft				
						NON FORNITO SEPARAT	NON FOURNI SEPAREMI	KEIN ERSATZTEIL	064N
					NO SE REPARA SEPARA	NOT SERVICED SEPARA	NIET ALLEEN VERKRIJG	NOT SERVICED SEPARA	
11		J348757		1	O-RING	ANELLO TOROIDALE	JOINT THORIQUE	DICHTRING	055A
					JUNTA HERMETICA	O-RING	O-RING	O-RING	
12		J4002104		1	PLUG	TAPPO	BOUCHON	STOPFEN	050T
					TAPÓN	BUJÃO	PLUG	PROP	
13		J678923		1	PLUG 10 mm, Inc. 14	TAPPO	BOUCHON	STOPFEN	050T
					TAPÓN	BUJÃO	PLUG	PROP	
14		J678925		1	O-RING	ANELLO TOROIDALE	JOINT THORIQUE	DICHTRING	055A
					JUNTA HERMETICA	O-RING	O-RING	O-RING	
		J800867		1	KIT, REPAIR Inlet, Inc. 15, 16				
						KIT RIPARAZIONE	COLIS DE RÉPARATION	REPARATURSATZ	003K
					JUEGO DE REPARACION	KIT REPARACAO	HERSTELKIT	REPARATIONSSAET	
15		NSS		1	NOT SERVICED SEPARATELY Connector				
						NON FORNITO SEPARAT	NON FOURNI SEPAREMI	KEIN ERSATZTEIL	064N
					NO SE REPARA SEPARA	NOT SERVICED SEPARA	NIET ALLEEN VERKRIJG	NOT SERVICED SEPARA	

FUEL INJECTION PUMP, MX255 AND MX285
POMPA DI INIEZIONE DEL COMBUSTIBILE, MX255 E MX285
POMPE D'INJECTION DE CARBURANT, MX255 ET MX285
KRAFTSTOFF-EINSPRITZPUMPE DER SERIEN MX255 UND MX285

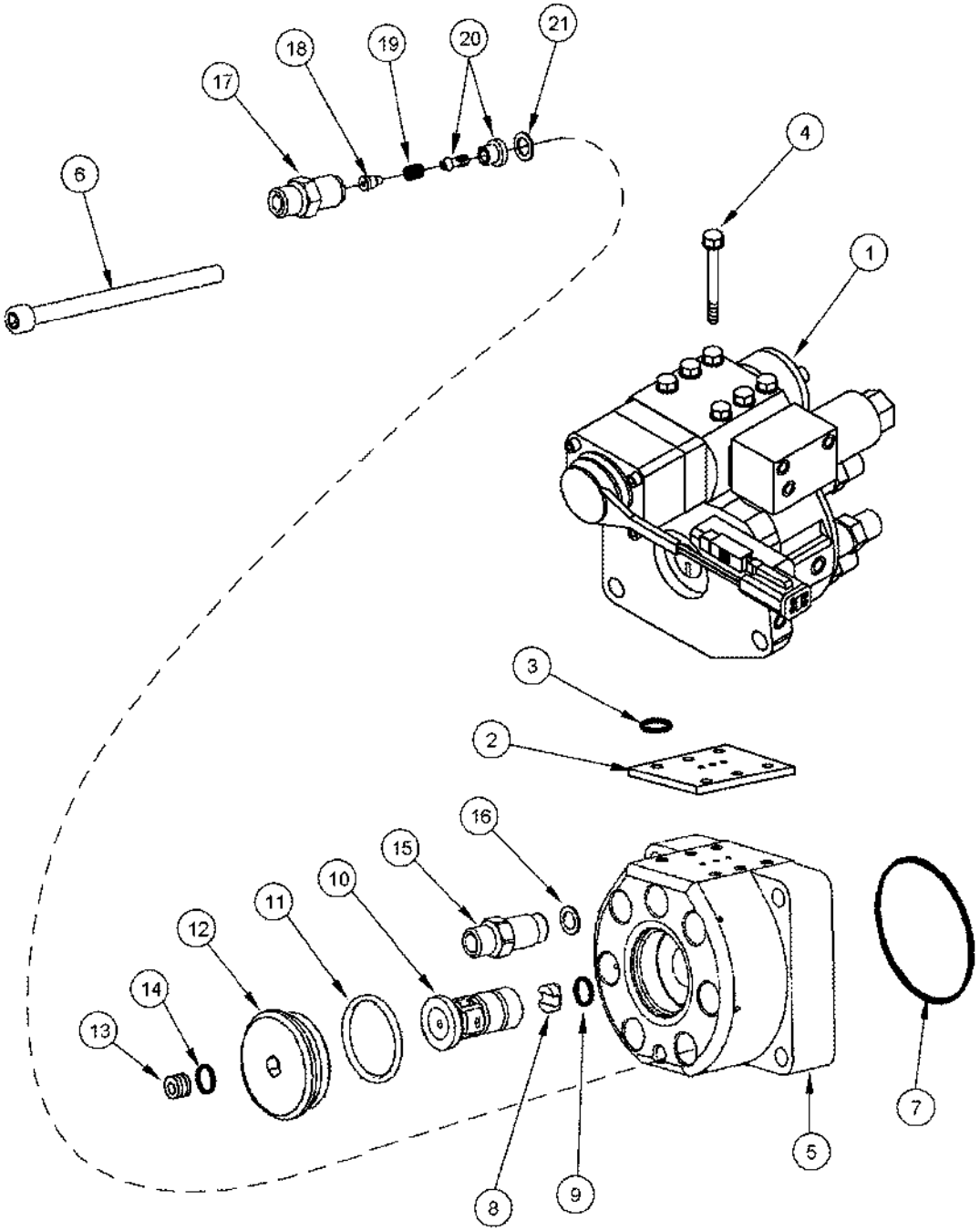

BOMBA DE INYECCIÓN DE COMBUSTIBLE, MX255 Y MX285
BOMBA DE INJECÇÃO DE COMBUSTÍVEL, MODELOS MX255 E MX285
BRANDSTOFINJECTIEPOMP, MX255 EN MX285
BRÆNDSTOFINDSPRØJTNINGSPUMPE, MX255 OG MX285

R	N	P.N.	MOD	Q	Description Denominacion	Descrizione Denominação	Description Beschrijving	Bezeichnung Beskrivelse	L.C.
16		J4009898		1	DISC DISCO	DISCO DISCO	DISQUE SCHIJF	SCHEIBE NAV	060D
		J800909		6	KIT, REPAIR Outlet, Inc. 17 - 21 JUEGO DE REPARACION	KIT RIPARAZIONE KIT REPARACAO	COLIS DE RÉPARATION HERSTELKIT	REPARATURSATZ REPARATIONSSAET	003K
17		NSS		1	NOT SERVICED SEPARATELY Connector NO SE REPARA SEPARA	NON FORNITO SEPARAT NOT SERVICED SEPARA	NON FOURNI SEPAREMI NIET ALLEEN VERKRIJG	KEIN ERSATZTEIL NOT SERVICED SEPARA	064N
18		NSS		1	NOT SERVICED SEPARATELY Guide NO SE REPARA SEPARA	NON FORNITO SEPARAT NOT SERVICED SEPARA	NON FOURNI SEPAREMI NIET ALLEEN VERKRIJG	KEIN ERSATZTEIL NOT SERVICED SEPARA	064N
19		NSS		1	NOT SERVICED SEPARATELY Spring NO SE REPARA SEPARA	NON FORNITO SEPARAT NOT SERVICED SEPARA	NON FOURNI SEPAREMI NIET ALLEEN VERKRIJG	KEIN ERSATZTEIL NOT SERVICED SEPARA	064N
20		NSS		1	NOT SERVICED SEPARATELY Seat, Valve NO SE REPARA SEPARA	NON FORNITO SEPARAT NOT SERVICED SEPARA	NON FOURNI SEPAREMI NIET ALLEEN VERKRIJG	KEIN ERSATZTEIL NOT SERVICED SEPARA	064N
21		J867724		1	SEAL ANILLO DE CIERRE	ANELLO DI TENUTA ANEL DE VEDACAO	JOINT DICHTINGSRING	DICHTUNG PAKNINGSRING	132A

FUEL INJECTION PUMP, MX255 AND MX285
POMPA DI INIEZIONE DEL COMBUSTIBILE, MX255 E MX285
POMPE D'INJECTION DE CARBURANT, MX255 ET MX285
KRAFTSTOFF-EINSPRITZPUMPE DER SERIEN MX255 UND MX285

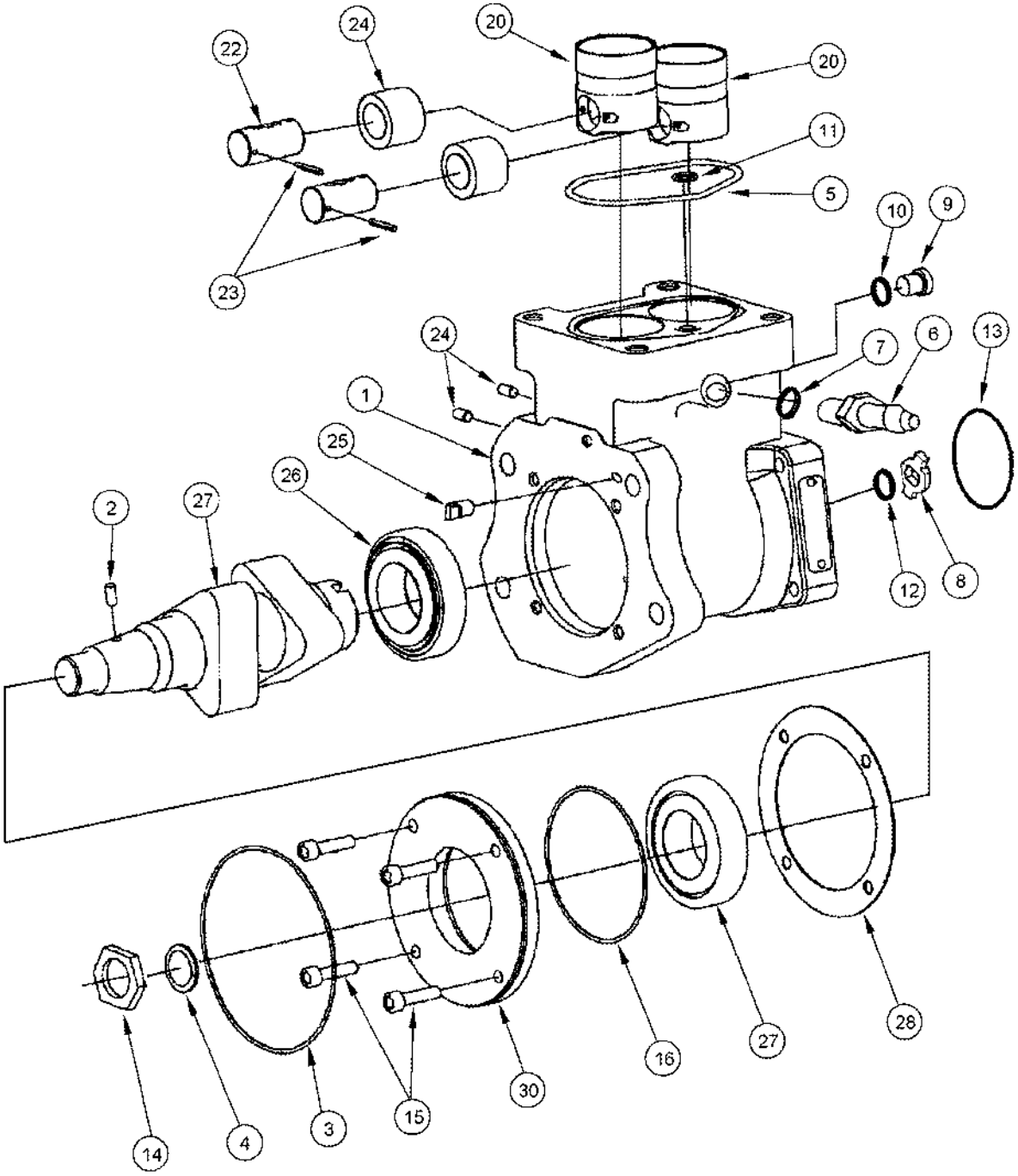

BOMBA DE INYECCIÓN DE COMBUSTIBLE, MX255 Y MX285
BOMBA DE INJECÇÃO DE COMBUSTÍVEL, MODELOS MX255 E MX285
BRANDSTOFINJECTIEPOMP, MX255 EN MX285
BRÆNDSTOFINDSPRØJTNINGSPUMPE, MX255 OG MX285

R	N	P.N.	MOD	Q	Description Denominacion	Descrizione Denominação	Description Beschrijving	Bezeichnung Beskrivelse	L.C.
		A77928		1	KIT, REPAIR Cam Housing, Inc. 1 - 30				
						KIT RIPARAZIONE	COLIS DE RÉPARATION	REPARATURSATZ	003K
					JUEGO DE REPARACION	KIT REPARACAO	HERSTELKIT	REPARATIONSSAET	
1		NSS		1	NOT SERVICED SEPARATELY Housing				
						NON FORNITO SEPARAT	NON FOURNI SEPAREMI	KEIN ERSATZTEIL	064N
					NO SE REPARA SEPARA	NOT SERVICED SEPARA	NIET ALLEEN VERKRIJG	NOT SERVICED SEPARA	
2		J329899		1	PIN	PERNO	AXE	BOLZEN	080P
					PERNO	PERNO	PEN	STIFT	
3		J330081		1	O-RING	ANELLO TOROIDALE	JOINT THORIQUE	DICHTRING	055A
					JUNTA HERMETICA	O-RING	O-RING	O-RING	
4		J330252		1	WASHER	ROSETTA PIANA	RONDELLE	BEILAGSCHEIBE	131R
					ARANDELA	ANILHA	SLUITRING	FLADSKIVE	
5		J4010636		1	O-RING	ANELLO TOROIDALE	JOINT THORIQUE	DICHTRING	055A
					JUNTA HERMETICA	O-RING	O-RING	O-RING	
6		J348448		1	CONNECTOR Inc. 7	CONNESSIONE	CONNECTEUR	STECKVERBINDUNG ELI	235C
					CONECTOR	CONECTOR	VERBINDING	STIK	
7		J678925		1	O-RING	ANELLO TOROIDALE	JOINT THORIQUE	DICHTRING	055A
					JUNTA HERMETICA	O-RING	O-RING	O-RING	
8		J417071		1	HUB	MOZZO	MOYEU	NABE	135M
					CUBO	CUBO	NAAF	NAV	
9		J678923		1	PLUG 10 mm, Inc. 10	TAPPO	BOUCHON	STOPFEN	050T
					TAPÓN	BUJÃO	PLUG	PROP	
10		J678925		1	O-RING	ANELLO TOROIDALE	JOINT THORIQUE	DICHTRING	055A
					JUNTA HERMETICA	O-RING	O-RING	O-RING	
11		J867640		1	O-RING	ANELLO TOROIDALE	JOINT THORIQUE	DICHTRING	055A
					JUNTA HERMETICA	O-RING	O-RING	O-RING	
12		J867641		1	O-RING	ANELLO TOROIDALE	JOINT THORIQUE	DICHTRING	055A
					JUNTA HERMETICA	O-RING	O-RING	O-RING	
13		J867642		1	O-RING	ANELLO TOROIDALE	JOINT THORIQUE	DICHTRING	055A
					JUNTA HERMETICA	O-RING	O-RING	O-RING	
14		J926593		1	NUT M20 x 1,5	DADO	ECROU	MUTTER	010D
					TUERCA	PORCA	MOER	MØTRIK	
15		NSS		4	NOT SERVICED SEPARATELY Bolt				
						NON FORNITO SEPARAT	NON FOURNI SEPAREMI	KEIN ERSATZTEIL	064N
					NO SE REPARA SEPARA	NOT SERVICED SEPARA	NIET ALLEEN VERKRIJG	NOT SERVICED SEPARA	
16		NSS		1	NOT SERVICED SEPARATELY O-Ring				
						NON FORNITO SEPARAT	NON FOURNI SEPAREMI	KEIN ERSATZTEIL	064N
					NO SE REPARA SEPARA	NOT SERVICED SEPARA	NIET ALLEEN VERKRIJG	NOT SERVICED SEPARA	
20		NSS		2	NOT SERVICED SEPARATELY Tappet				
						NON FORNITO SEPARAT	NON FOURNI SEPAREMI	KEIN ERSATZTEIL	064N
					NO SE REPARA SEPARA	NOT SERVICED SEPARA	NIET ALLEEN VERKRIJG	NOT SERVICED SEPARA	
21		NSS		2	NOT SERVICED SEPARATELY Roller				
						NON FORNITO SEPARAT	NON FOURNI SEPAREMI	KEIN ERSATZTEIL	064N
					NO SE REPARA SEPARA	NOT SERVICED SEPARA	NIET ALLEEN VERKRIJG	NOT SERVICED SEPARA	
22		NSS		2	NOT SERVICED SEPARATELY Pin				
						NON FORNITO SEPARAT	NON FOURNI SEPAREMI	KEIN ERSATZTEIL	064N
					NO SE REPARA SEPARA	NOT SERVICED SEPARA	NIET ALLEEN VERKRIJG	NOT SERVICED SEPARA	

FUEL INJECTION PUMP, MX255 AND MX285
POMPA DI INIEZIONE DEL COMBUSTIBILE, MX255 E MX285
POMPE D'INJECTION DE CARBURANT, MX255 ET MX285
KRAFTSTOFF-EINSPRITZPUMPE DER SERIEN MX255 UND MX285

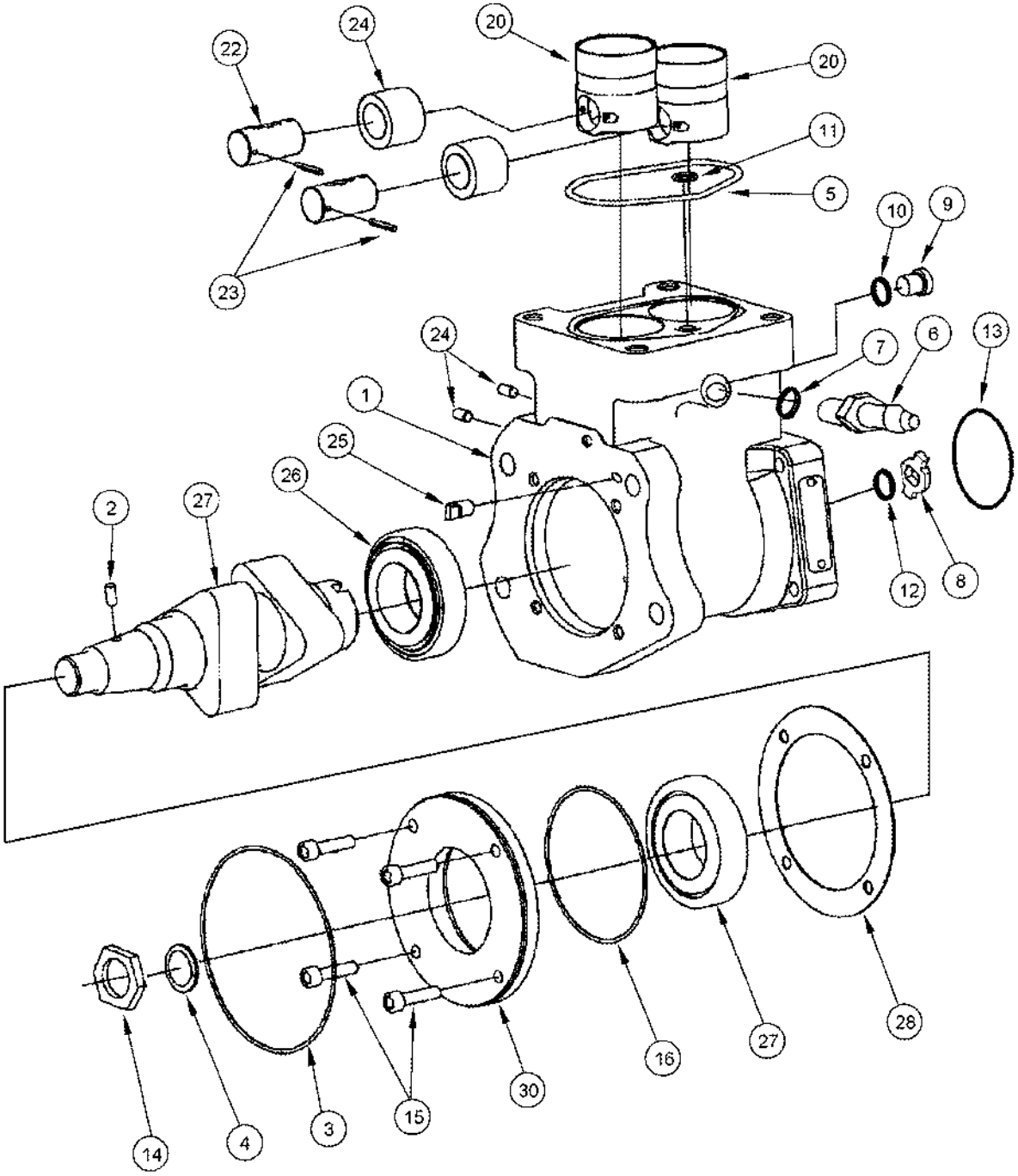

BOMBA DE INYECCIÓN DE COMBUSTIBLE, MX255 Y MX285
BOMBA DE INJECÇÃO DE COMBUSTÍVEL, MODELOS MX255 E MX285
BRANDSTOFINJECTIEPOMP, MX255 EN MX285
BRÆNDSTOFINDSPRØJTNINGSPUMPE, MX255 OG MX285

R	N	P.N.	MOD	Q	Description Denominacion	Descrizione Denominação	Description Beschrijving	Bezeichnung Beskrivelse	L.C.
23		NSS		2	NOT SERVICED SEPARATELY Pin, Roll				
						NON FORNITO SEPARAT	NON FOURNI SEPAREMI	KEIN ERSATZTEIL	064N
					NO SE REPARA SEPARA	NOT SERVICED SEPARA	NIET ALLEEN VERKRIJG	NOT SERVICED SEPARA	
24		NSS		2	NOT SERVICED SEPARATELY Pin, Dowel				
						NON FORNITO SEPARAT	NON FOURNI SEPAREMI	KEIN ERSATZTEIL	064N
					NO SE REPARA SEPARA	NOT SERVICED SEPARA	NIET ALLEEN VERKRIJG	NOT SERVICED SEPARA	
25		NSS		1	NOT SERVICED SEPARATELY Pin				
						NON FORNITO SEPARAT	NON FOURNI SEPAREMI	KEIN ERSATZTEIL	064N
					NO SE REPARA SEPARA	NOT SERVICED SEPARA	NIET ALLEEN VERKRIJG	NOT SERVICED SEPARA	
26		NSS		1	NOT SERVICED SEPARATELY Bearing, Roller				
						NON FORNITO SEPARAT	NON FOURNI SEPAREMI	KEIN ERSATZTEIL	064N
					NO SE REPARA SEPARA	NOT SERVICED SEPARA	NIET ALLEEN VERKRIJG	NOT SERVICED SEPARA	
27		NSS		1	NOT SERVICED SEPARATELY Camshaft				
						NON FORNITO SEPARAT	NON FOURNI SEPAREMI	KEIN ERSATZTEIL	064N
					NO SE REPARA SEPARA	NOT SERVICED SEPARA	NIET ALLEEN VERKRIJG	NOT SERVICED SEPARA	
28		NSS		1	NOT SERVICED SEPARATELY Shim				
						NON FORNITO SEPARAT	NON FOURNI SEPAREMI	KEIN ERSATZTEIL	064N
					NO SE REPARA SEPARA	NOT SERVICED SEPARA	NIET ALLEEN VERKRIJG	NOT SERVICED SEPARA	
29		NSS		1	NOT SERVICED SEPARATELY Bearing, Roller				
						NON FORNITO SEPARAT	NON FOURNI SEPAREMI	KEIN ERSATZTEIL	064N
					NO SE REPARA SEPARA	NOT SERVICED SEPARA	NIET ALLEEN VERKRIJG	NOT SERVICED SEPARA	
30		NSS		1	NOT SERVICED SEPARATELY Support				
						NON FORNITO SEPARAT	NON FOURNI SEPAREMI	KEIN ERSATZTEIL	064N
					NO SE REPARA SEPARA	NOT SERVICED SEPARA	NIET ALLEEN VERKRIJG	NOT SERVICED SEPARA	

FUEL INJECTION PUMP - GEAR AND MOUNTING BRACKETS, MX255 AND MX285
POMPA DI INIEZIONE DEL COMBUSTIBILE - INGRANAGGI E STAFFE DI MONTAGGIO, MX255 E MX285
ENGRENAGE ET SUPPORTS DE MONTAGE DE LA POMPE D'INJECTION DE CARBURANT, MX255 ET MX285
ZAHNRAD UND MONTAGEHALTERRUNGEN FÜR KRAFTSTOFF-EINSPRITZPUMPE DER SERIEN MX255 UND MX285

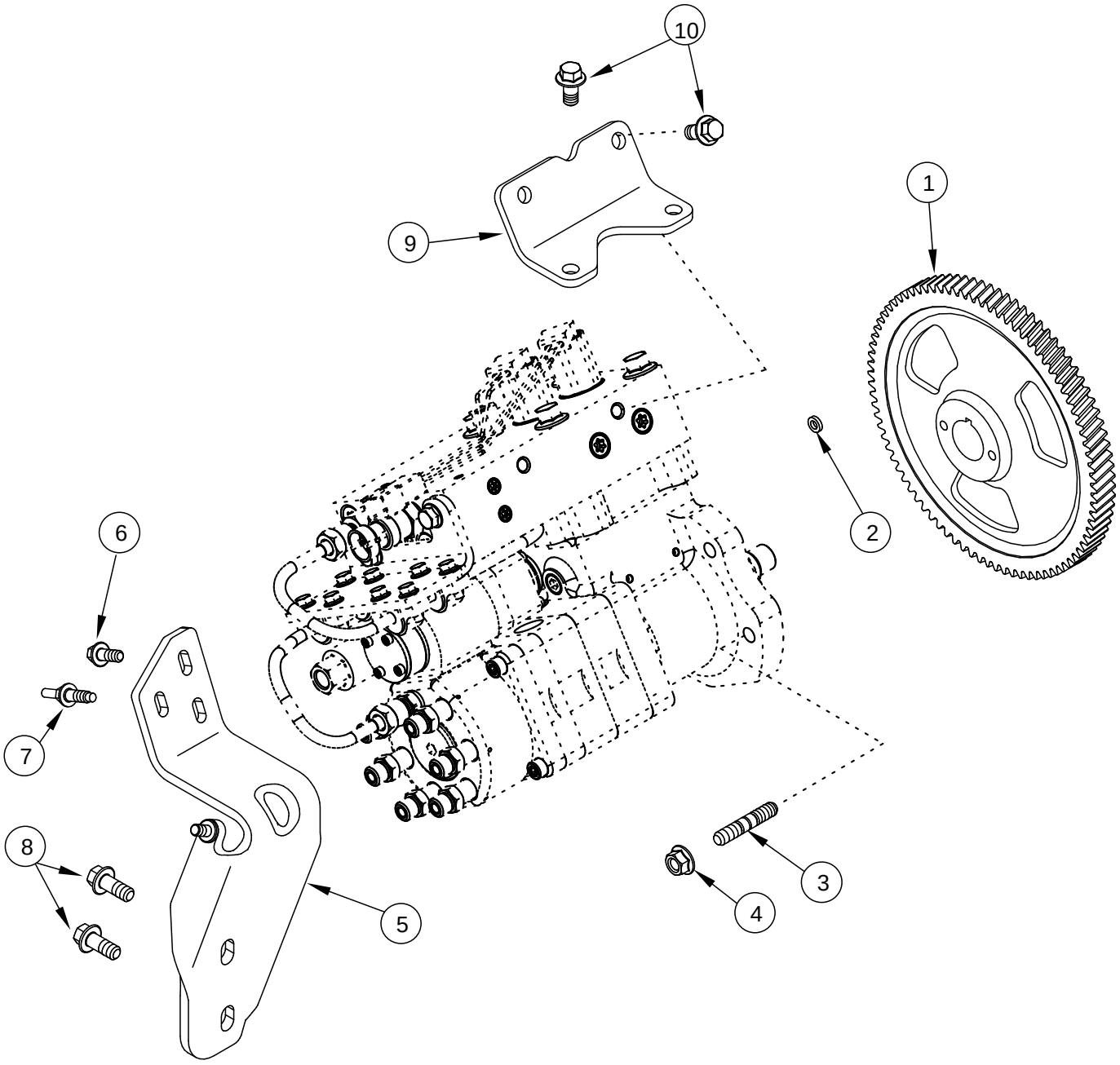

BOMBA DE INYECCIÓN DE COMBUSTIBLE - SOPORTES DE MONTAJE Y ENGRANAJE, MX255 Y MX285
BOMBA DE INJECÇÃO DE COMBUSTÍVEL - ENGRENAGEM E SUPORTES DE MONTAGEM, MODELOS MX255 E MX285
BRANDSTOFINJECTIEPOMP - TANDWIEL EN MONTAGEBEUGELS, MX255 EN MX285
BRÆNDSTOFINDSPRØJTNINGSPUMPE - GEAR OG MONTERINGSBESLAG, MX255 OG MX285

R	N	P.N.	MOD	Q	Description Denominacion	Descrizione Denominação	Description Beschrijving	Bezeichnung Beskrivelse	L.C.
1		J942764		1	GEAR ENGRANAJE	INGRANAGGIO CARRETO	PIGNON TANDWIEL	ZAHNRAD TANDHJUL	050I
2		J926722		1	SEAL ANILLO DE CIERRE	ANELLO DI TENUTA ANEL DE VEDACAO	JOINT DICHTINGSRING	DICHTUNG PAKNINGSRING	132A
3		86991263		4	STUD 55 mm (2-5/32 in) ESPARRAGO	PRIGIONIERO PRISIONEIRO	GOUJON STUD	STEHBOLZEN STUD	P521
4		825-2410		4	NUT M10 TUERCA	DADO PORCA	ECROU MOER	MUTTER MØTRIK	010D
5		J943440		1	SUPPORT APOYADERO	SUPPORTO SUPORTE	SUPPORT SUPPORT	STUETZE SUPPORT	8790
6		845-8020		2	SCREW M8 x 20; 8.8 TORNILLO	VITE PARAFUSO	VIS SCHROEF	SCHRAUBE SKRUE	7450
7		J909310		1	SCREW Special TORNILLO	VITE PARAFUSO	VIS SCHROEF	SCHRAUBE SKRUE	040V
8		844-10025		2	SCREW M10 x 20; 8.8 TORNILLO	VITE PARAFUSO	VIS SCHROEF	SCHRAUBE SKRUE	P136
9		J991108		1	SUPPORT SOPORTE	SUPPORTO SUPORTE	SUPPORT STEUN	STÜTZE BESLAG	300S
10		854-10020		4	SCREW M10 x 20; 10.9 TORNILLO	VITE PARAFUSO	VIS SCHROEF	SCHRAUBE SKRUE	7450

FUEL INJECTION - NOZZLE, MX210 AND MX230
INIEZIONE DEL COMBUSTIBILE - UGELLO, MX210 E MX230
INJECTEUR, MX210 ET MX230
KRAFTSTOFF-EINSPRITZDÜSE DER SERIEN MX210 UND MX230

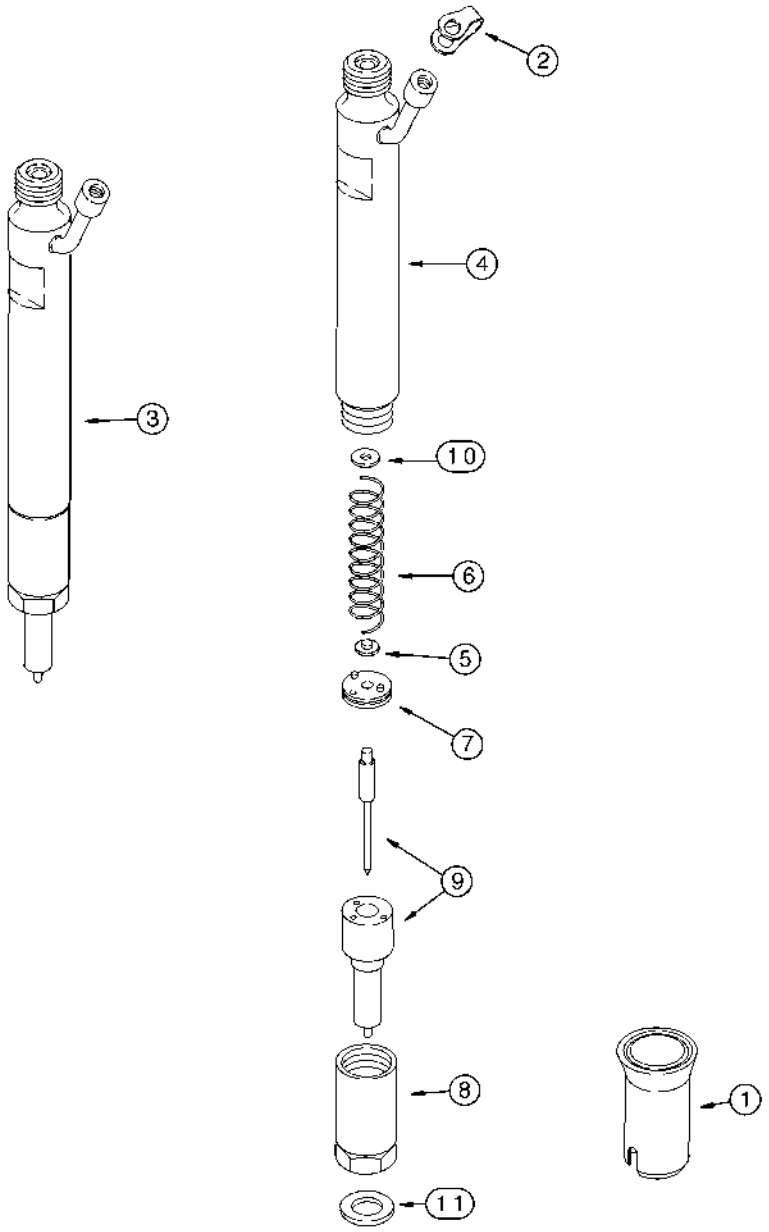

INYECCIÓN DE COMBUSTIBLE - BOQUILLA, MX210 Y MX230
BOCAL DE INJECÇÃO DE COMBUSTÍVEL, MODELOS MX210 E MX230
BRANDSTOFINSPUITING - SPUITMOND, MX210 EN MX230
BRÆNDSTOFINDSPRØJTNING - DYSE, MX210 OG MX230

R	N	P.N.	MOD	Q	Description Denominacion	Descrizione Denominação	Description Beschrijving	Bezeichnung Beskrivelse	L.C.
1		J909886		1	SEAL ANILLO DE CIERRE	ANELLO DI TENUTA ANEL DE VEDACAO	JOINT DICHTINGSRING	DICHTUNG PAKNINGSRING	132A
2		J903380		1	SEAL ANILLO DE CIERRE	ANELLO DI TENUTA ANEL DE VEDACAO	JOINT DICHTINGSRING	DICHTUNG PAKNINGSRING	132A
3	1	J939837		1	INJECTOR ASSY. New, Inc. 4 - 9 INYECTOR (CONJUNTO)	INIETTORE, COMPLESS INJETOR CONJUNTO	INJECTEUR (ASSEMBLE INJECTOR ASSY.	DUESE (KPLT.) INJECTOR ASSY.	P497
3	2	87400105		1	INJECTOR ASSY. New, Inc. 4 - 9 INYECTOR (CONJUNTO)	INIETTORE, COMPLESS INJETOR CONJUNTO	INJECTEUR (ASSEMBLE INJECTOR ASSY.	DUESE (KPLT.) INJECTOR ASSY.	P497
4		NSS		1	NOT SERVICED SEPARATELY Body NO SE REPARA SEPARA	NON FORNITO SEPARAT NOT SERVICED SEPARA	NON FOURNI SEPAREMI NIET ALLEEN VERKRIJG	KEIN ERSATZTEIL NOT SERVICED SEPARA	064N
5		NSS		1	NOT SERVICED SEPARATELY Seat NO SE REPARA SEPARA	NON FORNITO SEPARAT NOT SERVICED SEPARA	NON FOURNI SEPAREMI NIET ALLEEN VERKRIJG	KEIN ERSATZTEIL NOT SERVICED SEPARA	064N
6		NSS		1	NOT SERVICED SEPARATELY Spring NO SE REPARA SEPARA	NON FORNITO SEPARAT NOT SERVICED SEPARA	NON FOURNI SEPAREMI NIET ALLEEN VERKRIJG	KEIN ERSATZTEIL NOT SERVICED SEPARA	064N
7		NSS		1	NOT SERVICED SEPARATELY Stop NO SE REPARA SEPARA	NON FORNITO SEPARAT NOT SERVICED SEPARA	NON FOURNI SEPAREMI NIET ALLEEN VERKRIJG	KEIN ERSATZTEIL NOT SERVICED SEPARA	064N
8		NSS		1	NOT SERVICED SEPARATELY Nut NO SE REPARA SEPARA	NON FORNITO SEPARAT NOT SERVICED SEPARA	NON FOURNI SEPAREMI NIET ALLEEN VERKRIJG	KEIN ERSATZTEIL NOT SERVICED SEPARA	064N
9		NSS		1	NOT SERVICED SEPARATELY Tip, Tooth NO SE REPARA SEPARA	NON FORNITO SEPARAT NOT SERVICED SEPARA	NON FOURNI SEPAREMI NIET ALLEEN VERKRIJG	KEIN ERSATZTEIL NOT SERVICED SEPARA	064N
10		1806233C1		X	SHIM 1,00 mm SUPLEMENTO	SPESSORE CALCO DE AFINACAO	CALE D'EPAISSEUR DIKTEPLAAT	EINSTELLSCHEIBCHEN MELLEMLAEG	198S
10		1806234C1		X	SHIM 1,04 mm SUPLEMENTO	SPESSORE CALCO DE AFINACAO	CALE D'EPAISSEUR DIKTEPLAAT	EINSTELLSCHEIBCHEN MELLEMLAEG	198S
10		1806235C1		X	SHIM 1,08 mm SUPLEMENTO	SPESSORE CALCO DE AFINACAO	CALE D'EPAISSEUR DIKTEPLAAT	EINSTELLSCHEIBCHEN MELLEMLAEG	198S
10		1806236C1		X	SHIM 1,10 mm SUPLEMENTO	SPESSORE CALCO DE AFINACAO	CALE D'EPAISSEUR DIKTEPLAAT	EINSTELLSCHEIBCHEN MELLEMLAEG	198S
10		1806237C1		X	SHIM 1,14 mm SUPLEMENTO	SPESSORE CALCO DE AFINACAO	CALE D'EPAISSEUR DIKTEPLAAT	EINSTELLSCHEIBCHEN MELLEMLAEG	198S
10		1806238C1		X	SHIM 1,18 mm SUPLEMENTO	SPESSORE CALCO DE AFINACAO	CALE D'EPAISSEUR DIKTEPLAAT	EINSTELLSCHEIBCHEN MELLEMLAEG	198S
10		1806239C1		X	SHIM 1,20 mm SUPLEMENTO	SPESSORE CALCO DE AFINACAO	CALE D'EPAISSEUR DIKTEPLAAT	EINSTELLSCHEIBCHEN MELLEMLAEG	198S
10		1806240C1		X	SHIM 1,24 mm SUPLEMENTO	SPESSORE CALCO DE AFINACAO	CALE D'EPAISSEUR DIKTEPLAAT	EINSTELLSCHEIBCHEN MELLEMLAEG	198S
10		1806241C1		X	SHIM 1,28 mm SUPLEMENTO	SPESSORE CALCO DE AFINACAO	CALE D'EPAISSEUR DIKTEPLAAT	EINSTELLSCHEIBCHEN MELLEMLAEG	198S

(1) MX210
(2) MX230

FUEL INJECTION - NOZZLE, MX210 AND MX230
INIEZIONE DEL COMBUSTIBILE - UGELLO, MX210 E MX230
INJECTEUR, MX210 ET MX230
KRAFTSTOFF-EINSPRITZDÜSE DER SERIEN MX210 UND MX230

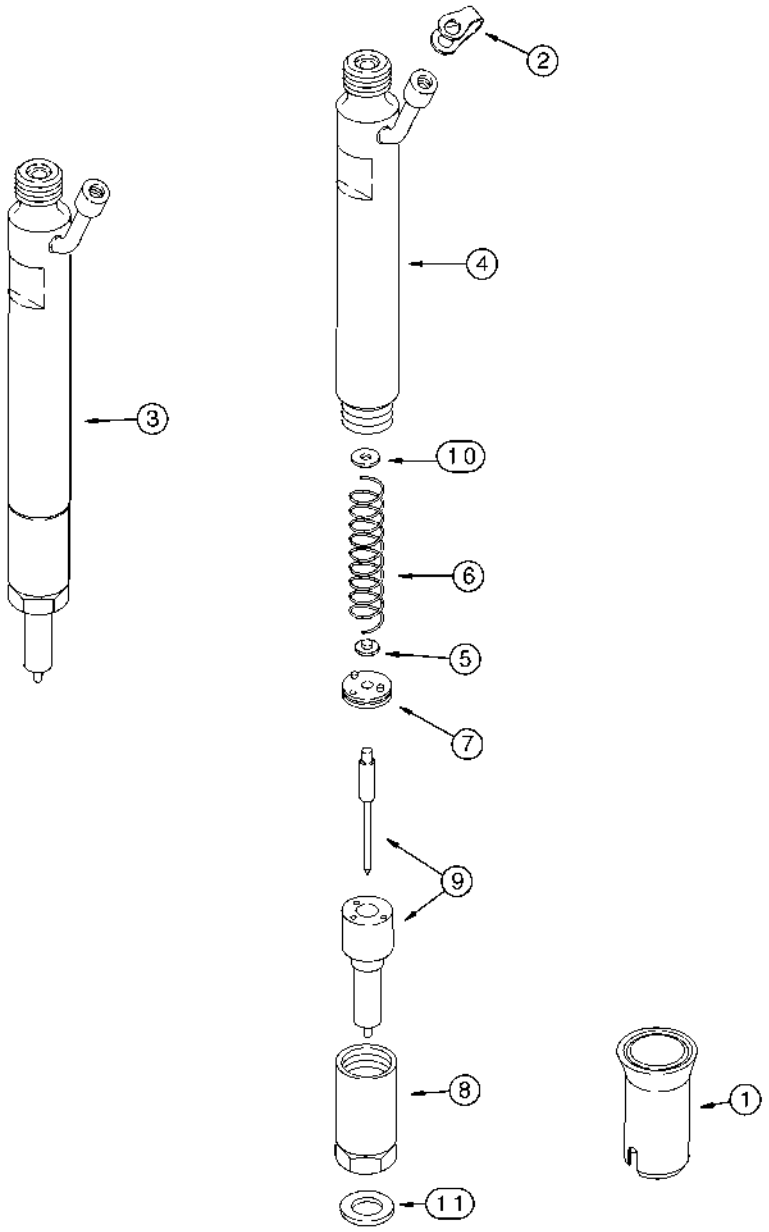

INYECCIÓN DE COMBUSTIBLE - BOQUILLA, MX210 Y MX230
BOCAL DE INJECÇÃO DE COMBUSTÍVEL, MODELOS MX210 E MX230
BRANDSTOFINSPUITING - SPUITMOND, MX210 EN MX230
BRÆNDSTOFINDSPRØJTNING - DYSE, MX210 OG MX230

R	N	P.N.	MOD	Q	Description Denominacion	Descrizione Denominação	Description Beschrijving	Bezeichnung Beskrivelse	L.C.
10		1806242C1		X	SHIM 1,30 mm SUPLEMENTO	SPESSORE CALCO DE AFINACAO	CALE D'EPAISSEUR DIKTEPLAAT	EINSTELLSCHEIBCHEN MELLEMLAEG	198S
10		1806243C1		X	SHIM 1,34 mm SUPLEMENTO	SPESSORE CALCO DE AFINACAO	CALE D'EPAISSEUR DIKTEPLAAT	EINSTELLSCHEIBCHEN MELLEMLAEG	198S
10		1806244C1		X	SHIM 1,38 mm SUPLEMENTO	SPESSORE CALCO DE AFINACAO	CALE D'EPAISSEUR DIKTEPLAAT	EINSTELLSCHEIBCHEN MELLEMLAEG	198S
10		1806245C1		X	SHIM 1,40 mm SUPLEMENTO	SPESSORE CALCO DE AFINACAO	CALE D'EPAISSEUR DIKTEPLAAT	EINSTELLSCHEIBCHEN MELLEMLAEG	198S
10		1806246C1		X	SHIM 1,44 mm SUPLEMENTO	SPESSORE CALCO DE AFINACAO	CALE D'EPAISSEUR DIKTEPLAAT	EINSTELLSCHEIBCHEN MELLEMLAEG	198S
10		1806247C1		X	SHIM 1,48 mm SUPLEMENTO	SPESSORE CALCO DE AFINACAO	CALE D'EPAISSEUR DIKTEPLAAT	EINSTELLSCHEIBCHEN MELLEMLAEG	198S
10		1806248C1		X	SHIM 1,50 mm SUPLEMENTO	SPESSORE CALCO DE AFINACAO	CALE D'EPAISSEUR DIKTEPLAAT	EINSTELLSCHEIBCHEN MELLEMLAEG	198S
10		1806249C1		X	SHIM 1,54 mm SUPLEMENTO	SPESSORE CALCO DE AFINACAO	CALE D'EPAISSEUR DIKTEPLAAT	EINSTELLSCHEIBCHEN MELLEMLAEG	198S
10		1806250C1		X	SHIM 1,58 mm SUPLEMENTO	SPESSORE CALCO DE AFINACAO	CALE D'EPAISSEUR DIKTEPLAAT	EINSTELLSCHEIBCHEN MELLEMLAEG	198S
10		1806251C1		X	SHIM 1,60 mm SUPLEMENTO	SPESSORE CALCO DE AFINACAO	CALE D'EPAISSEUR DIKTEPLAAT	EINSTELLSCHEIBCHEN MELLEMLAEG	198S
10		1806252C1		X	SHIM 1,64 mm SUPLEMENTO	SPESSORE CALCO DE AFINACAO	CALE D'EPAISSEUR DIKTEPLAAT	EINSTELLSCHEIBCHEN MELLEMLAEG	198S
10		1806253C1		X	SHIM 1,68 mm SUPLEMENTO	SPESSORE CALCO DE AFINACAO	CALE D'EPAISSEUR DIKTEPLAAT	EINSTELLSCHEIBCHEN MELLEMLAEG	198S
10		1806254C1		X	SHIM 1,70 mm SUPLEMENTO	SPESSORE CALCO DE AFINACAO	CALE D'EPAISSEUR DIKTEPLAAT	EINSTELLSCHEIBCHEN MELLEMLAEG	198S
10		1806255C1		X	SHIM 1,74 mm SUPLEMENTO	SPESSORE CALCO DE AFINACAO	CALE D'EPAISSEUR DIKTEPLAAT	EINSTELLSCHEIBCHEN MELLEMLAEG	198S
10		1806256C1		X	SHIM 1,78 mm SUPLEMENTO	SPESSORE CALCO DE AFINACAO	CALE D'EPAISSEUR DIKTEPLAAT	EINSTELLSCHEIBCHEN MELLEMLAEG	198S
10		1806257C1		X	SHIM 1,80 mm SUPLEMENTO	SPESSORE CALCO DE AFINACAO	CALE D'EPAISSEUR DIKTEPLAAT	EINSTELLSCHEIBCHEN MELLEMLAEG	198S
10		1806258C1		X	SHIM 1,84 mm SUPLEMENTO	SPESSORE CALCO DE AFINACAO	CALE D'EPAISSEUR DIKTEPLAAT	EINSTELLSCHEIBCHEN MELLEMLAEG	198S
10		1806259C1		X	SHIM 1,88 mm SUPLEMENTO	SPESSORE CALCO DE AFINACAO	CALE D'EPAISSEUR DIKTEPLAAT	EINSTELLSCHEIBCHEN MELLEMLAEG	198S
10		1806260C1		X	SHIM 1,90 mm SUPLEMENTO	SPESSORE CALCO DE AFINACAO	CALE D'EPAISSEUR DIKTEPLAAT	EINSTELLSCHEIBCHEN MELLEMLAEG	198S
10		1806261C1		X	SHIM 1,94 mm SUPLEMENTO	SPESSORE CALCO DE AFINACAO	CALE D'EPAISSEUR DIKTEPLAAT	EINSTELLSCHEIBCHEN MELLEMLAEG	198S
10		1806262C1		X	SHIM 1,98 mm SUPLEMENTO	SPESSORE CALCO DE AFINACAO	CALE D'EPAISSEUR DIKTEPLAAT	EINSTELLSCHEIBCHEN MELLEMLAEG	198S
11		J937142		6	SEAL 1,5 mm ANILLO DE CIERRE	ANELLO DI TENUTA ANEL DE VEDACAO	JOINT DICHTINGSRING	DICHTUNG PAKNINGSRING	132A

FUEL INJECTION - NOZZLE , MX255 AND MX285
INIEZIONE DEL COMBUSTIBILE - UGELLO, MX255 E MX285
INJECTEUR, MX255 ET MX285
KRAFTSTOFF-EINSPRITZDÜSE DER SERIEN MX255 UND MX285

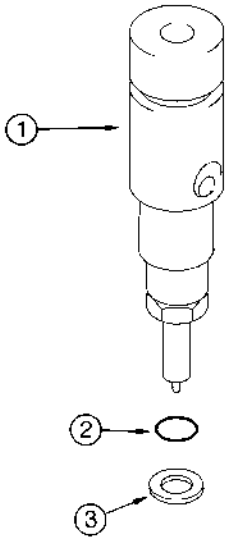

INYECCIÓN DE COMBUSTIBLE - BOQUILLA, MX255 Y MX285
BOCAL DE INJECÇÃO DE COMBUSTÍVEL, MODELOS MX255 E MX285
BRANDSTOFINSPUITING - SPUITMOND , MX255 EN MX285
BRÆNDSTOFINDSPRØJTNING - DYSE, MX255 OG MX285

R	N	P.N.	MOD	Q	Description Denominacion	Descrizione Denominação	Description Beschrijving	Bezeichnung Beskrivelse	L.C.
1		J948529		1	INJECTOR ASSY. New, Inc. 2, 3				
						INIETTORE, COMPLESS	INJECTEUR (ASSEMBLE	DUESE (KPLT.)	P497
					INYECTOR (CONJUNTO)	INJETOR CONJUNTO	INJECTOR ASSY.	INJECTOR ASSY.	
2		238-7210		1	O-RING 3/4 ID x 9/64	ANELLO TOROIDALE	JOINT TORIQUE	O-RING	7176
					JUNTA HERMETICA	ANEL O	O-RING	O-RING	
3		J937142		1	SEAL 1,5 mm	ANELLO DI TENUTA	JOINT	DICHTUNG	132A
					ANILLO DE CIERRE	ANEL DE VEDACAO	DICHTINGSRING	PAKNINGSRING	

03-16		p1	12/02

HAND THROTTLE, MX210 AND MX230
ACCELERATORE MANUALE, MX210 E MX230
MANETTE DES GAZ, MX210 ET MX230
GASHEBEL DER SERIEN MX210 UND MX230

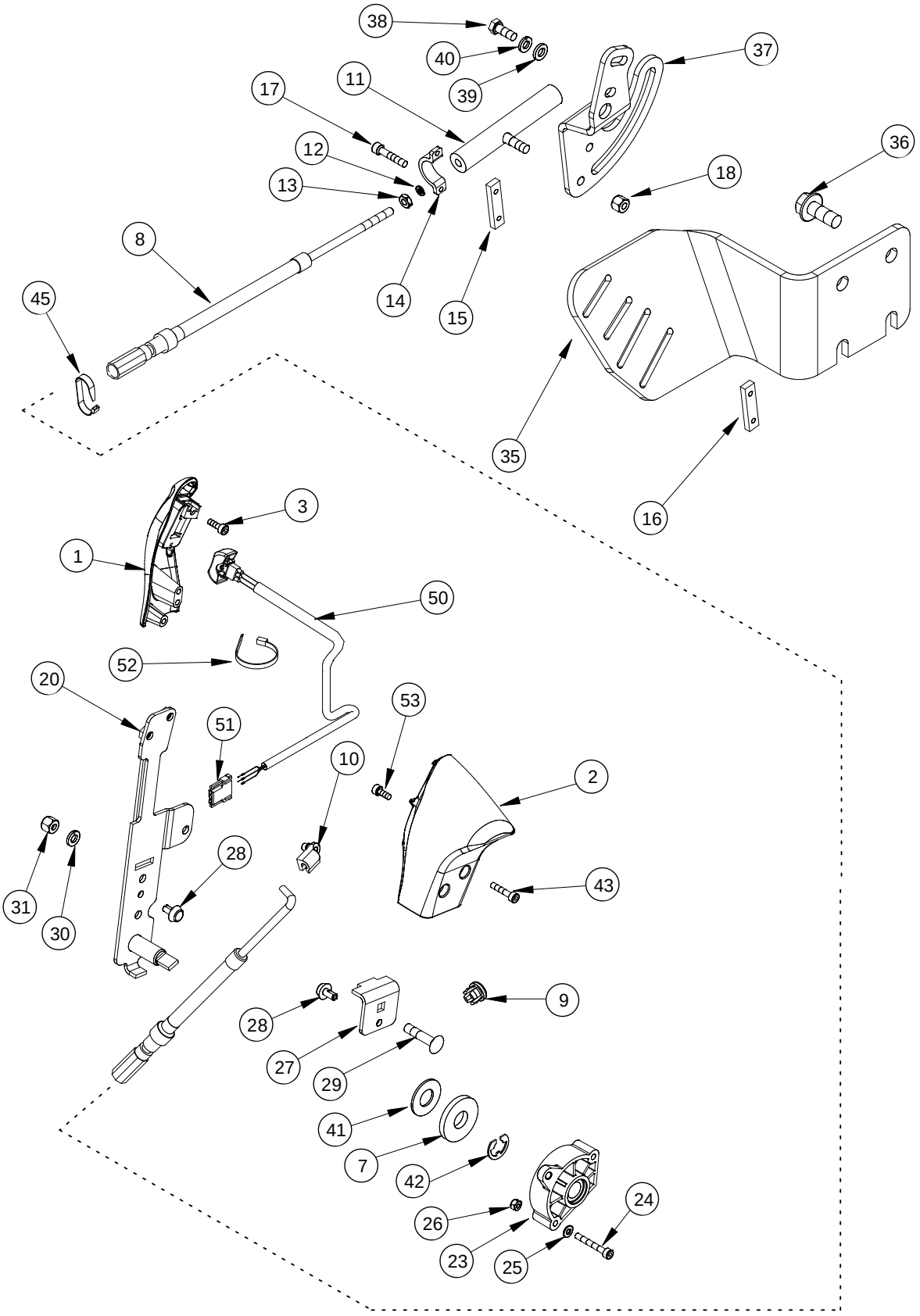

ACELERADOR MANUAL, MX210 Y MX230
ACELERADOR DE MÃO, MODELOS MX210 E MX230
HANDGAS, MX210 EN MX230
HÅNDGASGREB, MX210 OG MX230

R	N	P.N.	MOD	Q	Description Denominacion	Descrizione Denominação	Description Beschrijving	Bezeichnung Beskrivelse	L.C.
1		316000A2		1	GRIP MANGO	IMPUGNATURA MACANETA	POIGNEE DE MANETTE GRIP	GRIFF GREB	4000
2		293388A2		1	GRIP Standard And Deluxe Cab MANGO	IMPUGNATURA MACANETA	POIGNEE DE MANETTE GRIP	GRIFF GREB	4000
2		359032A1		1	GRIP Luxury Cab MANGO	IMPUGNATURA MACANETA	POIGNEE DE MANETTE GRIP	GRIFF GREB	4000
3		368048A1		3	SCREW M4 x 12 TORNILLO	VITE PARAFUSO	VIS SCHROEF	SCHRAUBE SKRUE	040V
7		237486A1		1	WASHER ARANDELA	ROSETTA PIANA ANILHA	RONDELLE SLUITRING	BEILAGSCHEIBE FLADSKIVE	131R
8		278816A3		1	CABLE CABLE	CAVO CABO	CABLE KABEL	KABEL KABEL	1240
9		A67295		1	PLUG TAPÓN	TAPPO BUJÃO	BOUCHON PLUG	STOPFEN PROP	050T
10		60-2404T1		1	RETAINER RETENEDOR	RITEGNO RETENTOR	RETENEUR HOUDER	HALTEVORRICHTUNG HOLDER	7125
11		1974525C2		1	BALL JOINT JUNTA DE ROTULA	GIUNTO SFERICO JUNTA ESFÉRICA	ROTULE KOGELGEWRICHT	KUGELGELENK KUGLELED	070G
12		492-11010		1	WASHER, LOCK No. 10 ARANDELA DE FRENO	ROSETTA DI SICUREZZA ANILHA DE FIXACAO	RONDELLE FREIN VEERRING	SPRENGRING LAASESKIVE	132R
13		225-14210		1	NUT No. 10 NF TUERCA	DADO PORCA	ECROU MOER	MUTTER MØTRIK	5780
14		A75815		1	CLAMP COLLAR	MORSETTO BRACADEIRA	COLLIER CLAMP	SCHELLE CLAMP	1640
15		L40315		1	SHIM SUPLEMENTO	SPESSORE CALCO DE AFINACAO	CALE D'EPAISSEUR DIKTEPLAAT	EINSTELLSCHEIBCHEN MELLEMLAEG	198S
16		224900A1		1	PLATE, LARGE PLACA, GRANDE	PIASTRA, LARGA PLACA ESPESSA	PLAQUE, GRANDE PLATE, LARGE	PLATTE, GROSS PLATE, LARGE	Z308
17		461-31016		2	SCREW No. 10 x 1 TORNILLO	VITE PARAFUSO	VIS SCHROEF	SCHRAUBE SKRUE	7450
18		230-4714		1	NUT 1/4 NF TUERCA	DADO PORCA	ECROU MOER	MUTTER MØTRIK	5780
20		367607A1		1	SUPPORT APOYADERO	SUPPORTO SUPORTE	SUPPORT SUPPORT	STUETZE SUPPORT	8790
23		239491A1		1	BUSHING CASQUILLO	BOCCOLA CASQUILHO	BAGUE LAGERBUS	BUECHSE BOESNING	095B
24		864-4035		2	SCREW M4 x 35; 8.8 TORNILLO	VITE PARAFUSO	VIS SCHROEF	SCHRAUBE SKRUE	7450
25		895-11004		2	WASHER 4,3 x 9 x 0,8 mm ARANDELA	ROSETTA PIANA ANILHA	RONDELLE SLUITRING	SCHEIBE FLADSKIVE	9720
26		832-46404		2	NUT M4; 8 TUERCA	DADO PORCA	ECROU MOER	MUTTER MØTRIK	5780
27		258734A2		1	SUPPORT SOPORTE	SUPPORTO SUPORTE	SUPPORT STEUN	STÜTZE BESLAG	300S
28		259040A1		2	PAD, WEAR PATÍN DE DESGASTE	TAMPONE ANTIUSURA PATÍN DE DESGASTE	PATIN D'USURE PAD, WEAR	VERSCHLEISSKISSEN SLIDKLODS	P724
29		811-6030		1	SCREW M6 x 30; 8,8 TORNILLO	VITE PARAFUSO	VIS SCHROEF	SCHRAUBE SKRUE	7450

03-16		p2	12/02

HAND THROTTLE, MX210 AND MX230
ACCELERATORE MANUALE, MX210 E MX230
MANETTE DES GAZ, MX210 ET MX230
GASHEBEL DER SERIEN MX210 UND MX230

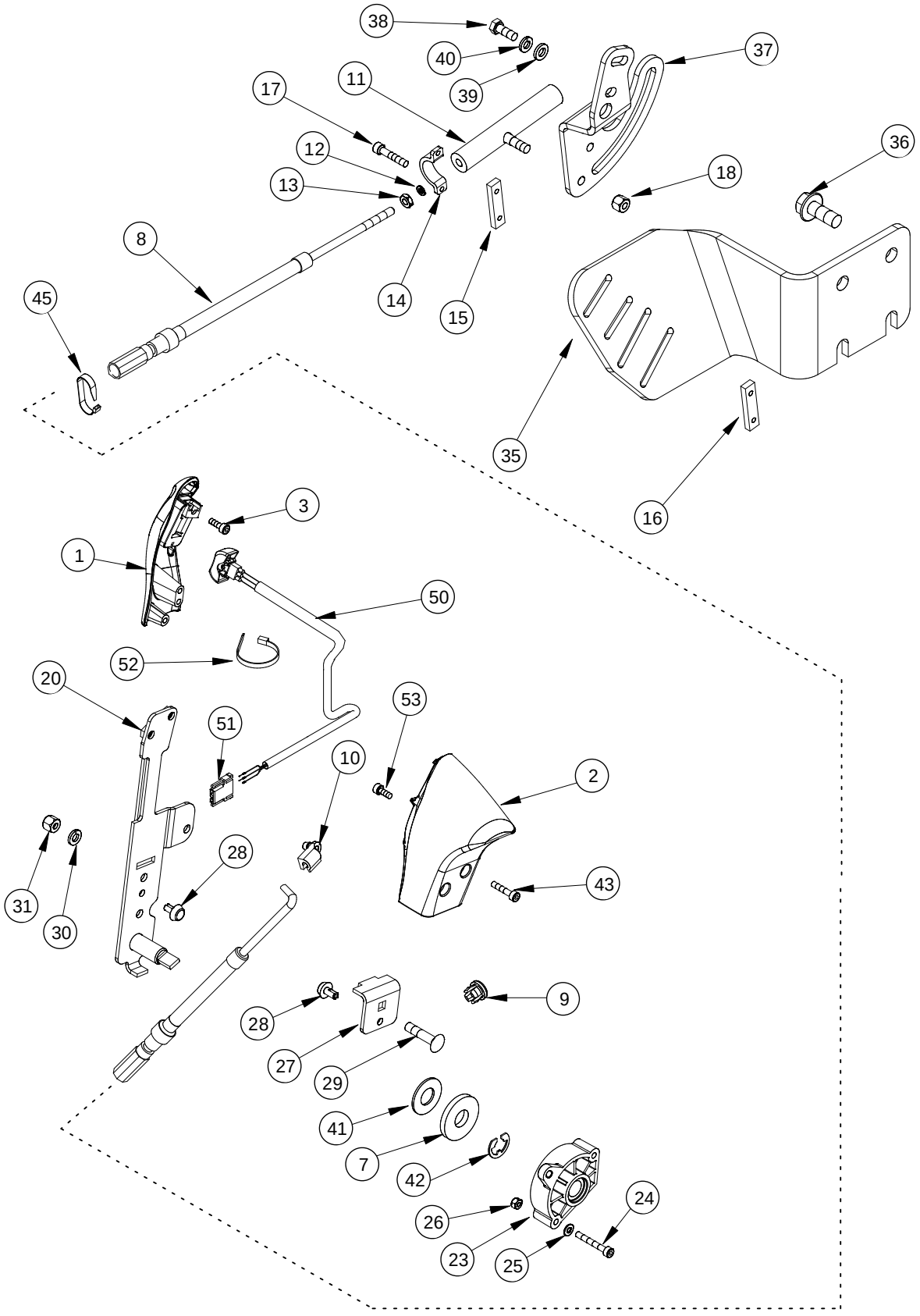

ACELERADOR MANUAL, MX210 Y MX230
ACELERADOR DE MÃO, MODELOS MX210 E MX230
HANDGAS, MX210 EN MX230
HÅNDGASGREB, MX210 OG MX230

R	N	P.N.	MOD	Q	Description Denominacion	Descrizione Denominação	Description Beschrijving	Bezeichnung Beskrivelse	L.C.
30		892-11006		2	WASHER, LOCK M6 ARANDELA DE FRENO	ROSETTA DI SICUREZZA ANILHA DE FIXACAO	RONDELLE FREIN VEERRING	SPRENGRING LAASESKIVE	132R
31		832-10406		1	NUT M6; 8 TUERCA	DADO PORCA	ECROU MOER	MUTTER MØTRIK	5780
35		320787A1		1	SUPPORT SOPORTE	SUPPORTO SUPORTE	SUPPORT STEUN	STÜTZE BESLAG	300S
36		854-10025		2	SCREW M10 x 25; 10.9 TORNILLO	VITE PARAFUSO	VIS SCHROEF	SCHRAUBE SKRUE	7450
37		198834A2		1	SUPPORT SOPORTE	SUPPORTO SUPORTE	SUPPORT STEUN	STÜTZE BESLAG	300S
38		627-6016		2	SCREW M6 x 16; 10.9 TORNILLO	VITE PARAFUSO	VIS SCHROEF	SCHRAUBE SKRUE	7450
39		896-11006		2	WASHER 6,6 x 12,5 x 2 mm ARANDELA	ROSETTA PIANA ANILHA	RONDELLE SLUITRING	BEILAGSCHEIBE FLADSKIVE	131R
40		892-11006		2	WASHER, LOCK M6 ARANDELA DE FRENO	ROSETTA DI SICUREZZA ANILHA DE FIXACAO	RONDELLE FREIN VEERRING	SPRENGRING LAASESKIVE	132R
41		495-81022		1	WASHER 17/32 x 1-1/8 x 1/16 ARANDELA	ROSETTA PIANA ANILHA	RONDELLE SLUITRING	SCHEIBE FLADSKIVE	9720
42		103-3350		1	RING, SNAP No. 50 ANILLO DE RESORTE	ANELLO ELASTICO ANEL	ANNEAU D'ARRÊT RING, SNAP	SICHERUNGSRING LÅSERING	054A
43		864-4025		2	SCREW M4 x 25; 8,8 TORNILLO	VITE PARAFUSO	VIS SCHROEF	SCHRAUBE SKRUE	7450
45		L18337		2	STRAP 15 in BANDA	BANDELLA BANDA	SANGLE RIEM	GURT STROP	532B
50		258010A2		1	SWITCH Transmission Shift CONTACTOR	INTERRUTTORE INTERRUPTOR	CONTACTEUR AAN-UIT SCHAKELAAR	SCHALTER KONTAKT	8850
51		235676A1		1	CONNECTOR CONECTOR	CONNESSIONE CONECTOR	CONNECTEUR VERBINDING	STECKVERBINDUNG ELI STIK	1950
52		473321C1		2	STRAP 8 in BANDA	BANDELLA BANDA	SANGLE RIEM	GURT STROP	532B
53		864-4012		1	SCREW M4 x 12 TORNILLO	VITE PARAFUSO	VIS SCHROEF	SCHRAUBE SKRUE	7450

03-17		p1	12/04

HAND THROTTLE, MX255 AND MX285
ACCELERATORE MANUALE, MX255 E MX285
MANETTE DES GAZ, MX255 ET MX285
GASHEBEL DER SERIEN MX255 UND MX285

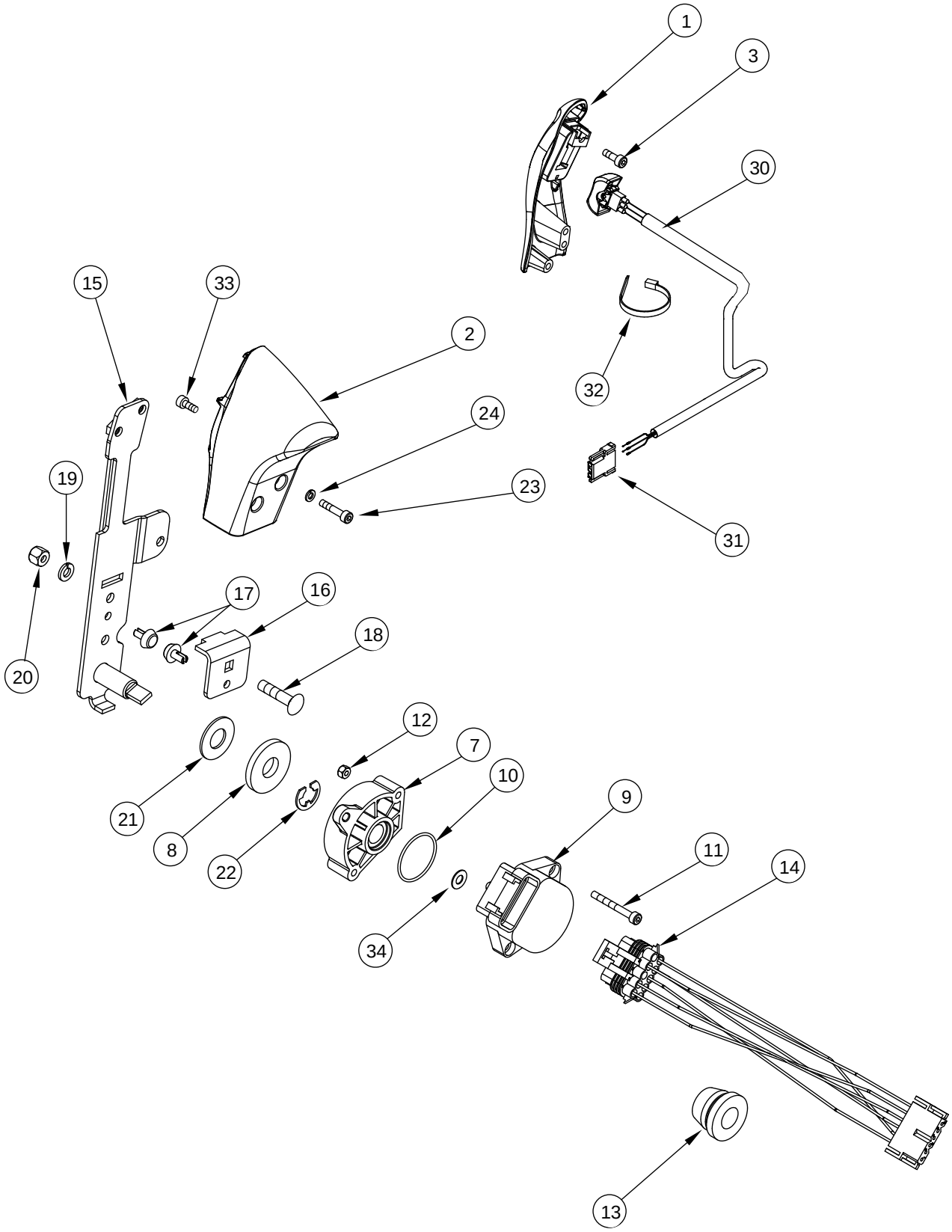

ACELERADOR MANUAL, MX255 Y MX285
ACELERADOR DE MÃO, MODELOS MX255 E MX285
HANDGAS, MX255 EN MX285
HÅNDGASGREB, MX255 OG MX285

R	N	P.N.	MOD	Q	Description Denominacion	Descrizione Denominação	Description Beschrijving	Bezeichnung Beskrivelse	L.C.
1		316000A2		1	GRIP MANGO	IMPUGNATURA MACANETA	POIGNEE DE MANETTE GRIP	GRIFF GREB	4000
2		293388A2		1	GRIP Standard And Deluxe Cab MANGO	IMPUGNATURA MACANETA	POIGNEE DE MANETTE GRIP	GRIFF GREB	4000
2		359032A1		1	GRIP Luxury Cab MANGO	IMPUGNATURA MACANETA	POIGNEE DE MANETTE GRIP	GRIFF GREB	4000
3		368048A1		3	SCREW M4 x 12 TORNILLO	VITE PARAFUSO	VIS SCHROEF	SCHRAUBE SKRUE	040V
7		239491A1		1	BUSHING CASQUILLO	BOCCOLA CASQUILHO	BAGUE LAGERBUS	BUECHSE BOESNING	095B
8		237486A1		1	WASHER ARANDELA	ROSETTA PIANA ANILHA	RONDELLE SLUITRING	BEILAGSCHEIBE FLADSKIVE	131R
9		259012A1		1	POTENTIOMETER POTENCIOMETRO	POTENZIOMETRO POTENCIOMETRO	POTENTIOMETRE POTENTIOMETER	POTENTIOMETER POTENTIOMETER	550P
10		238-6025		1	O-RING 1-3/16 ID x 1/16 JUNTA HERMETICA	ANELLO TOROIDALE ANEL O	JOINT TORIQUE O-RING	O-RING O-RING	7176
11		864-4035		2	SCREW M4 x 35; 8.8 TORNILLO	VITE PARAFUSO	VIS SCHROEF	SCHRAUBE SKRUE	7450
12		832-46404		2	NUT M4; 8 TUERCA	DADO PORCA	ECROU MOER	MUTTER MØTRIK	5780
13		182220A1		1	GROMMET PASACABLES	ANELLO PASSACAVO CASQUILHO ISOLADOR	PASSE-FIL KABELDOORGANG	TÜLLE RING	131A
14		276352A1		1	HARNESS HAZ	CABLAGGIO CHICOTE	FAISCEAU HARNESS	KABELSTRANG HARNESS	4160
15		367607A1		1	SUPPORT APOYADERO	SUPPORTO SUPORTE	SUPPORT SUPPORT	STUETZE SUPPORT	8790
16		258734A2		1	SUPPORT SOPORTE	SUPPORTO SUPORTE	SUPPORT STEUN	STÜTZE BESLAG	300S
17		259040A1		2	PAD, WEAR PATÍN DE DESGASTE	TAMPONE ANTIUSURA PATÍN DE DESGASTE	PATIN D'USURE PAD, WEAR	VERSCHLEISSKISSEN SLIDKLODS	P724
18		811-6030		1	SCREW M6 x 30; 8,8 TORNILLO	VITE PARAFUSO	VIS SCHROEF	SCHRAUBE SKRUE	7450
19		892-11006		2	WASHER, LOCK M6 ARANDELA DE FRENO	ROSETTA DI SICUREZZA ANILHA DE FIXACAO	RONDELLE FREIN VEERRING	SPRENGRING LAASESKIVE	132R
20		832-10406		1	NUT M6; 8 TUERCA	DADO PORCA	ECROU MOER	MUTTER MØTRIK	5780
21		495-81022		1	WASHER 17/32 x 1-1/8 x 1/16 ARANDELA	ROSETTA PIANA ANILHA	RONDELLE SLUITRING	SCHEIBE FLADSKIVE	9720
22		103-3350		1	RING, SNAP No. 50 ANILLO DE RESORTE	ANELLO ELASTICO ANEL	ANNEAU D'ARRÊT RING, SNAP	SICHERUNGSRING LÅSERING	054A
23		864-4020		2	SCREW M4 x 20 TORNILLO	VITE PARAFUSO	VIS SCHROEF	SCHRAUBE SKRUE	P136
24		892-11004		2	WASHER M4 ARANDELA	ROSETTA PIANA ANILHA	RONDELLE SLUITRING	SCHEIBE FLADSKIVE	9720
30		258010A2		1	SWITCH Transmission Shift CONTACTOR	INTERRUTTORE INTERRUPTOR	CONTACTEUR AAN-UIT SCHAKELAAR	SCHALTER KONTAKT	8850

03-17		p2	12/04

HAND THROTTLE, MX255 AND MX285
ACCELERATORE MANUALE, MX255 E MX285
MANETTE DES GAZ, MX255 ET MX285
GASHEBEL DER SERIEN MX255 UND MX285

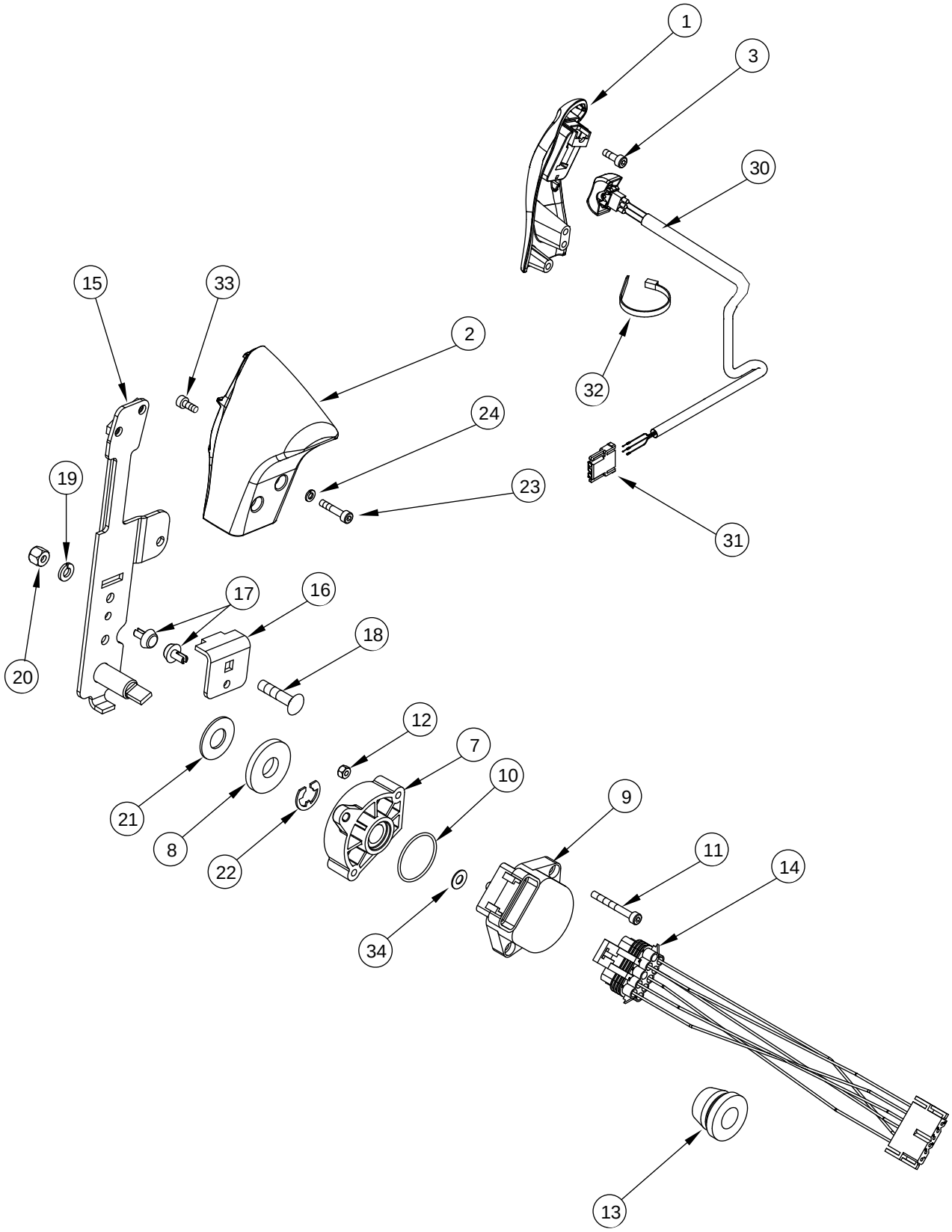

ACELERADOR MANUAL, MX255 Y MX285
ACELERADOR DE MÃO, MODELOS MX255 E MX285
HANDGAS, MX255 EN MX285
HÅNDGASGREB, MX255 OG MX285

R	N	P.N.	MOD	Q	Description Denominacion	Descrizione Denominação	Description Beschrijving	Bezeichnung Beskrivelse	L.C.
31		235676A1		1	CONNECTOR CONECTOR	CONNESSIONE CONECTOR	CONNECTEUR VERBINDING	STECKVERBINDUNG ELI STIK	1950
32		473321C1		2	STRAP 8 in BANDA	BANDELLA BANDA	SANGLE RIEM	GURT STROP	532B
33		864-4012		1	SCREW M4 x 12 TORNILLO	VITE PARAFUSO	VIS SCHROEF	SCHRAUBE SKRUE	7450
34		895-11004		2	WASHER 4,3 x 9 x 0,8 mm ARANDELA	ROSETTA PIANA ANILHA	RONDELLE SLUITRING	SCHEIBE FLADSKIVE	9720

03-18		p1	12/02

FOOT THROTTLE, MX210 AND MX230
ACCELERATORE A PEDALE, MX210 E MX230
PÉDALE D'ACCÉLÉRATION, MX210 ET MX230
GASPEDAL DER SERIEN MX210 UND MX230

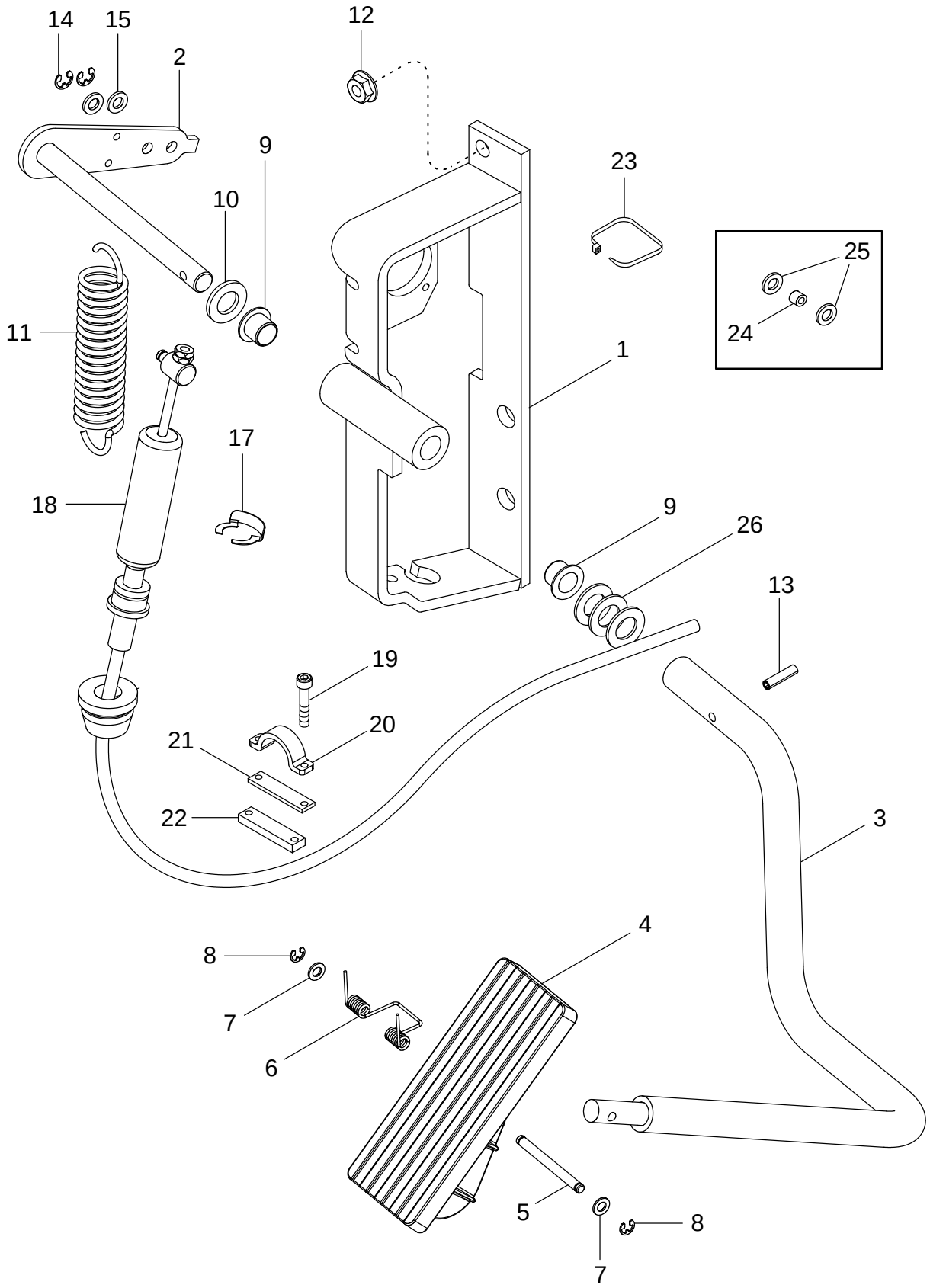

PEDAL DEL ACELERADOR, MX210 Y MX230
PEDAL DE ACELERAÇÃO, MODELOS MX210 E MX230
GASPEDAAL, MX210 EN MX230
FODGASGREB, MX210 OG MX230

R	N	P.N.	MOD	Q	Description Denominacion	Descrizione Denominação	Description Beschrijving	Bezeichnung Beskrivelse	L.C.
1		404659A3		1	FRAME BASTIDOR	TELAIO ESTRUTURA	CHASSIS RAAM	GESTELL RAMME	077T
2		446487A1		1	LEVER PALANCA	LEVA ALAVANCA	LEVIER HEFBOOM	HEBEL HAANDTAG	045L
3		446488A1		1	TUBE ASSY. TUBO (CONJUNTO)	TUBO, COMPLESSIVO TUBO CONJUNTO	TUYAUTERIE TUBE ASSY.	ROHRLEITUNG TUBE ASSY.	P465
4		297853A2		1	PEDAL PEDAL	PEDALE PEDAL	PEDALE PEDAAL	PEDAL PEDAL	060P
5		255291A1		1	PIN PERNO	PERNO PERNO	AXE PEN	BOLZEN STIFT	080P
6		256776A1		1	SPRING RESORTE	MOLLA MOLA	RESSORT VEER	FEDER FJEDER	100M
7		895-11005		2	WASHER 5,5 x 10 x 1 mm ARANDELA	ROSETTA PIANA ANILHA	RONDELLE SLUITRING	SCHEIBE FLADSKIVE	9720
8		800-435		2	RING, SNAP 5 mm ANILLO DE RESORTE	ANELLO ELASTICO ANEL	ANNEAU D'ARRÊT RING, SNAP	SICHERUNGSRING LÅSERING	054A
9		1533540C1		2	EYEBOLT PERNO, OJO	GOLFARE ANEL	BOULON A OEIL OOGBOUT	AUGBOLZEN OEJEBOLT	081G
10		895-11012		1	WASHER 13,5 x 24 x 2,5 mm ARANDELA	ROSETTA PIANA ANILHA	RONDELLE SLUITRING	SCHEIBE FLADSKIVE	9720
11		248913A2		1	SPRING RESORTE	MOLLA MOLA	RESSORT VEER	FEDER FJEDER	100M
12		825-2408		3	NUT M8 TUERCA	DADO PORCA	ECROU MOER	MUTTER MØTRIK	5780
13		838-3528		1	SPLIT PIN/SAFETY PIN 5 x 28 mm PASADOR	PERNO DIVISO PINO	GOUPILLE SPLIT PIN/SAFETY PIN	SPLINT/STIFT SPLIT PIN/SAFETY PIN	Z510
14		800-316		1	SNAP RING 6 mm ANILLO DE CIERRE	ANELLO ELASTICO ANEL TRAVA	ANNEAU-D'ARRET SNAP RING	SICHERUNGSRING SNAP RING	P345
15		895-11006		1	WASHER 6,6 x 12 x 1,6 mm ARANDELA	ROSETTA PIANA ANILHA	RONDELLE SLUITRING	BEILAGSCHEIBE FLADSKIVE	131R
17		3223258R2		1	CIRCLIP RETENEDOR	ANELLO DI RITEGNO FREIO DE MOLA	CIRCLIP BORGVEER	HALTERING LAASERING	056A
18		295830A4		1	CABLE CABLE	CAVO CABO	CABLE KABEL	KABEL KABEL	1240
19		461-31016		2	SCREW No. 10 x 1 TORNILLO	VITE PARAFUSO	VIS SCHROEF	SCHRAUBE SKRUE	7450
20		A75815		1	CLAMP COLLAR	MORSETTO BRACADEIRA	COLLIER CLAMP	SCHELLE CLAMP	1640
21		L40315		1	SHIM SUPLEMENTO	SPESSORE CALCO DE AFINACAO	CALE D'EPAISSEUR DIKTEPLAAT	EINSTELLSCHEIBCHEN MELLEMLAEG	198S
22		224900A1		1	PLATE, LARGE PLACA, GRANDE	PIASTRA, LARGA PLACA ESPESSA	PLAQUE, GRANDE PLATE, LARGE	PLATTE, GROSS PLATE, LARGE	Z308
23		473321C1		3	STRAP BANDA	BANDELLA BANDA	SANGLE RIEM	GURT STROP	532B
24		1971259C1		1	SPACER 3/8 x 7/32 SEPARADOR	DISTANZIALE ESPACADOR	ENTRETOISE AFSTANDSRING	DISTANZSTÜCK AFSTANDSSTYKKE	075D

FOOT THROTTLE, MX210 AND MX230
ACCELERATORE A PEDALE, MX210 E MX230
PÉDALE D'ACCÉLÉRATION, MX210 ET MX230
GASPEDAL DER SERIEN MX210 UND MX230

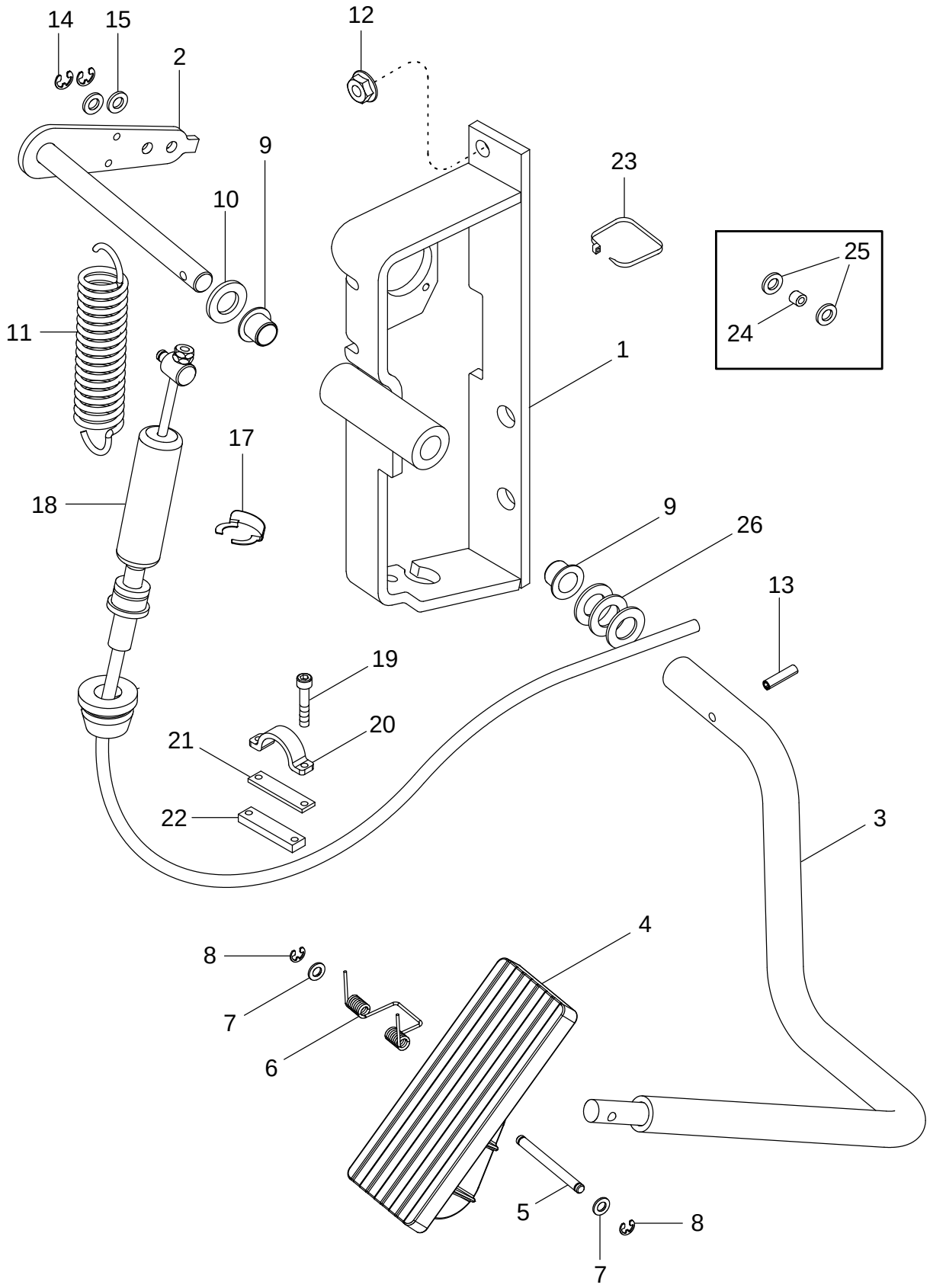

PEDAL DEL ACELERADOR, MX210 Y MX230
PEDAL DE ACELERAÇÃO, MODELOS MX210 E MX230
GASPEDAAL, MX210 EN MX230
FODGASGREB, MX210 OG MX230

R	N	P.N.	MOD	Q	Description Denominacion	Descrizione Denominação	Description Beschrijving	Bezeichnung Beskrivelse	L.C.
25		495-81107		2	WASHER 9/32 x 7/8 x 3/64 ARANDELA	ROSETTA PIANA ANILHA	RONDELLE SLUITRING	SCHEIBE FLADSKIVE	9720
26		495-81020		3	WASHER 17/32 x 1 x 1/32, Use As Required ARANDELA	ROSETTA PIANA ANILHA	RONDELLE SLUITRING	SCHEIBE FLADSKIVE	9720

03-19		p1	12/02

FOOT THROTTLE, MX255 AND MX285
ACCELERATORE A PEDALE, MX255 E MX285
PÉDALE D'ACCÉLÉRATION, MX255 ET MX285
GASPEDAL DER SERIEN MX255 UND MX285

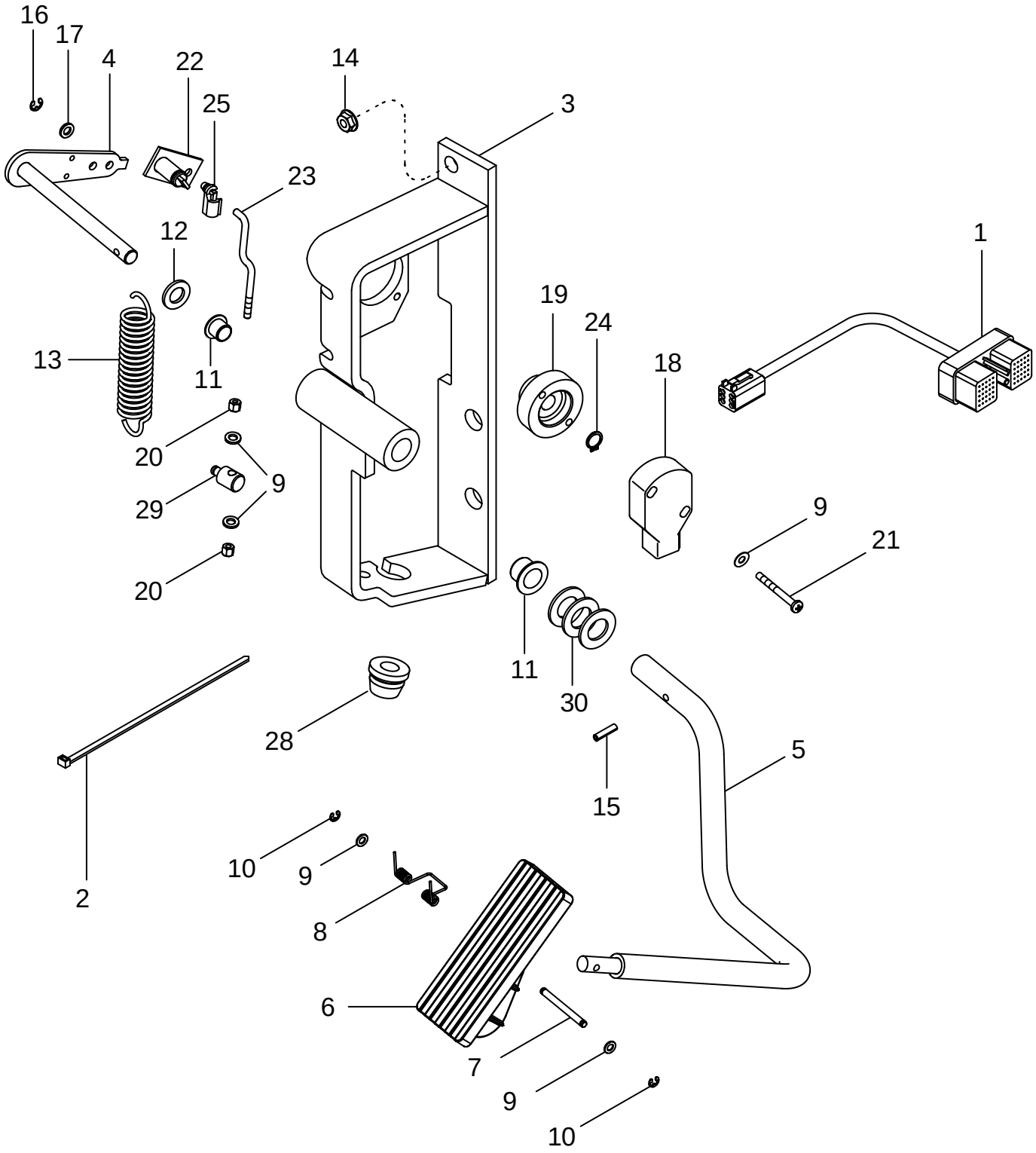

PEDAL DEL ACELERADOR, MX255 Y MX285
PEDAL DE ACELERAÇÃO, MODELOS MX255 E MX285
GASPEDAAL, MX255 EN MX285
FODGASGREB, MX255 OG MX285

R	N	P.N.	MOD	Q	Description Denominacion	Descrizione Denominação	Description Beschrijving	Bezeichnung Beskrivelse	L.C.
1		86984487		1	HARNESS HAZ	CABLAGGIO CHICOTE	FAISCEAU HARNESS	KABELSTRANG HARNESS	4160
2		L18337		12	STRAP 15 in BANDA	BANDELLA BANDA	SANGLE RIEM	GURT STROP	532B
2		473321C1		3	STRAP BANDA	BANDELLA BANDA	SANGLE RIEM	GURT STROP	532B
3		404659A3		1	FRAME BASTIDOR	TELAIO ESTRUTURA	CHASSIS RAAM	GESTELL RAMME	077T
4		446487A1		1	LEVER PALANCA	LEVA ALAVANCA	LEVIER HEFBOOM	HEBEL HAANDTAG	045L
5		446488A1		1	TUBE ASSY. TUBO (CONJUNTO)	TUBO, COMPLESSIVO TUBO CONJUNTO	TUYAUTERIE TUBE ASSY.	ROHRLEITUNG TUBE ASSY.	P465
6		297853A2		1	PEDAL PEDAL	PEDALE PEDAL	PEDALE PEDAAL	PEDAL PEDAL	060P
7		255291A1		1	PIN PERNO	PERNO PERNO	AXE PEN	BOLZEN STIFT	080P
8		256776A1		1	SPRING RESORTE	MOLLA MOLA	RESSORT VEER	FEDER FJEDER	100M
9		895-11005		6	WASHER 5,5 x 10 x 1 mm ARANDELA	ROSETTA PIANA ANILHA	RONDELLE SLUITRING	SCHEIBE FLADSKIVE	9720
10		800-435		2	RING, SNAP 5 mm ANILLO DE RESORTE	ANELLO ELASTICO ANEL	ANNEAU D'ARRÊT RING, SNAP	SICHERUNGSRING LÅSERING	054A
11		1533540C1		2	EYEBOLT PERNO, OJO	GOLFARE ANEL	BOULON A OEIL OOGBOUT	AUGBOLZEN OEJEBOLT	081G
12		895-11012		1	WASHER 13,5 x 24 x 2,5 mm ARANDELA	ROSETTA PIANA ANILHA	RONDELLE SLUITRING	SCHEIBE FLADSKIVE	9720
13		248913A2		1	SPRING RESORTE	MOLLA MOLA	RESSORT VEER	FEDER FJEDER	100M
14		825-2408		3	NUT M8 TUERCA	DADO PORCA	ECROU MOER	MUTTER MØTRIK	5780
15		838-3528		1	SPLIT PIN/SAFETY PIN 5 x 28 mm PASADOR	PERNO DIVISO PINO	GOUPILLE SPLIT PIN/SAFETY PIN	SPLINT/STIFT SPLIT PIN/SAFETY PIN	Z510
16		800-316		1	SNAP RING 6 mm ANILLO DE CIERRE	ANELLO ELASTICO ANEL TRAVA	ANNEAU-D'ARRET SNAP RING	SICHERUNGSRING SNAP RING	P345
17		895-11006		1	WASHER 6,6 x 12 x 1,6 mm ARANDELA	ROSETTA PIANA ANILHA	RONDELLE SLUITRING	BEILAGSCHEIBE FLADSKIVE	131R
18		231426A1		1	POTENTIOMETER POTENCIOMETRO	POTENZIOMETRO POTENCIOMETRO	POTENTIOMETRE POTENTIOMETER	POTENTIOMETER POTENTIOMETER	550P
19		231410A1		1	BUSHING CASQUILLO	BOCCOLA CASQUILHO	BAGUE LAGERBUS	BUECHSE BOESNING	095B
20		832-10405		2	NUT M5 TUERCA	DADO PORCA	ECROU MOER	MUTTER MØTRIK	5780
21		840-1550		2	SCREW M5 x 50; 4,8 TORNILLO	VITE PARAFUSO	VIS SCHROEF	SCHRAUBE SKRUE	7450
22		322108A1		1	SUPPORT SOPORTE	SUPPORTO SUPORTE	SUPPORT STEUN	STÜTZE BESLAG	300S

03-19		p2	12/02

FOOT THROTTLE, MX255 AND MX285
ACCELERATORE A PEDALE, MX255 E MX285
PÉDALE D'ACCÉLÉRATION, MX255 ET MX285
GASPEDAL DER SERIEN MX255 UND MX285

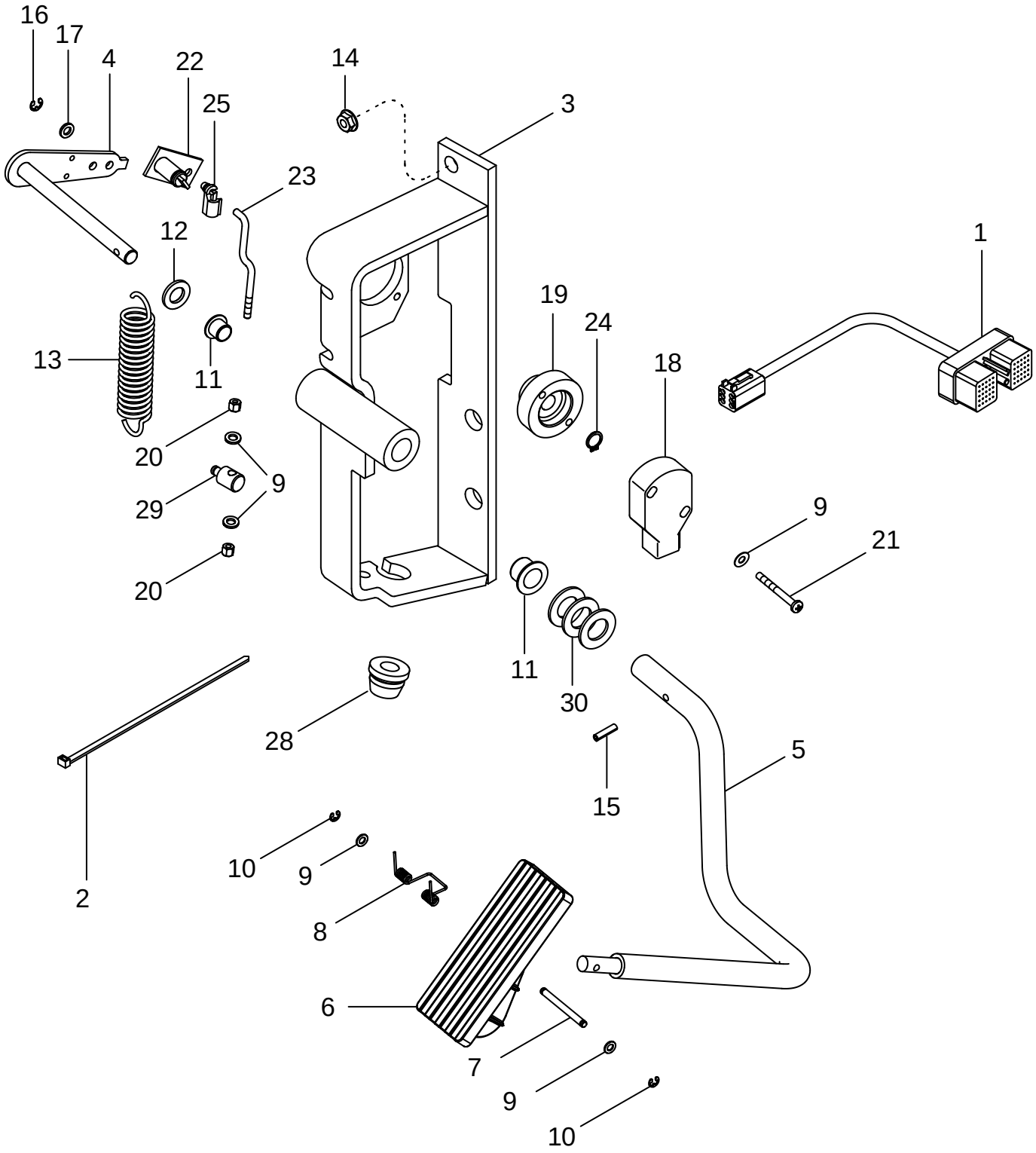

PEDAL DEL ACELERADOR, MX255 Y MX285
PEDAL DE ACELERAÇÃO, MODELOS MX255 E MX285
GASPEDAAL, MX255 EN MX285
FODGASGREB, MX255 OG MX285

R	N	P.N.	MOD	Q	Description Denominacion	Descrizione Denominação	Description Beschrijving	Bezeichnung Beskrivelse	L.C.
23		322109A1		1	ROD VARILLA	ASTA HASTE	TRINGLE STANG	STANGE STANG	090A
24		800-1112		1	SNAP RING 12 mm ANILLO DE CIERRE	ANELLO ELASTICO ANEL TRAVA	ANNEAU-D'ARRET SNAP RING	SICHERUNGSRING SNAP RING	P345
25		60-2404T1		1	RETAINER RETENEDOR	RITEGNO RETENTOR	RETENEUR HOUDER	HALTEVORRICHTUNG HOLDER	7125
28		182220A1		1	GROMMET PASACABLES	ANELLO PASSACAVO CASQUILHO ISOLADOR	PASSE-FIL KABELDOORGANG	TÜLLE RING	131A
29		307475A1		1	PIVOT PIVOTE	ARTICOLAZIONE PIVOTE	PIVOT PIVOT	WELLENZAPFEN TAP	093A
30		495-81020		3	WASHER 17/32 x 1 x 1/32, Use As Required ARANDELA	ROSETTA PIANA ANILHA	RONDELLE SLUITRING	SCHEIBE FLADSKIVE	9720

03-20		p1	10/04

FUEL TANKS
SERBATOI DEL COMBUSTIBILE
RÉSERVOIR DE CARBURANT
KRAFTSTOFFTANKS

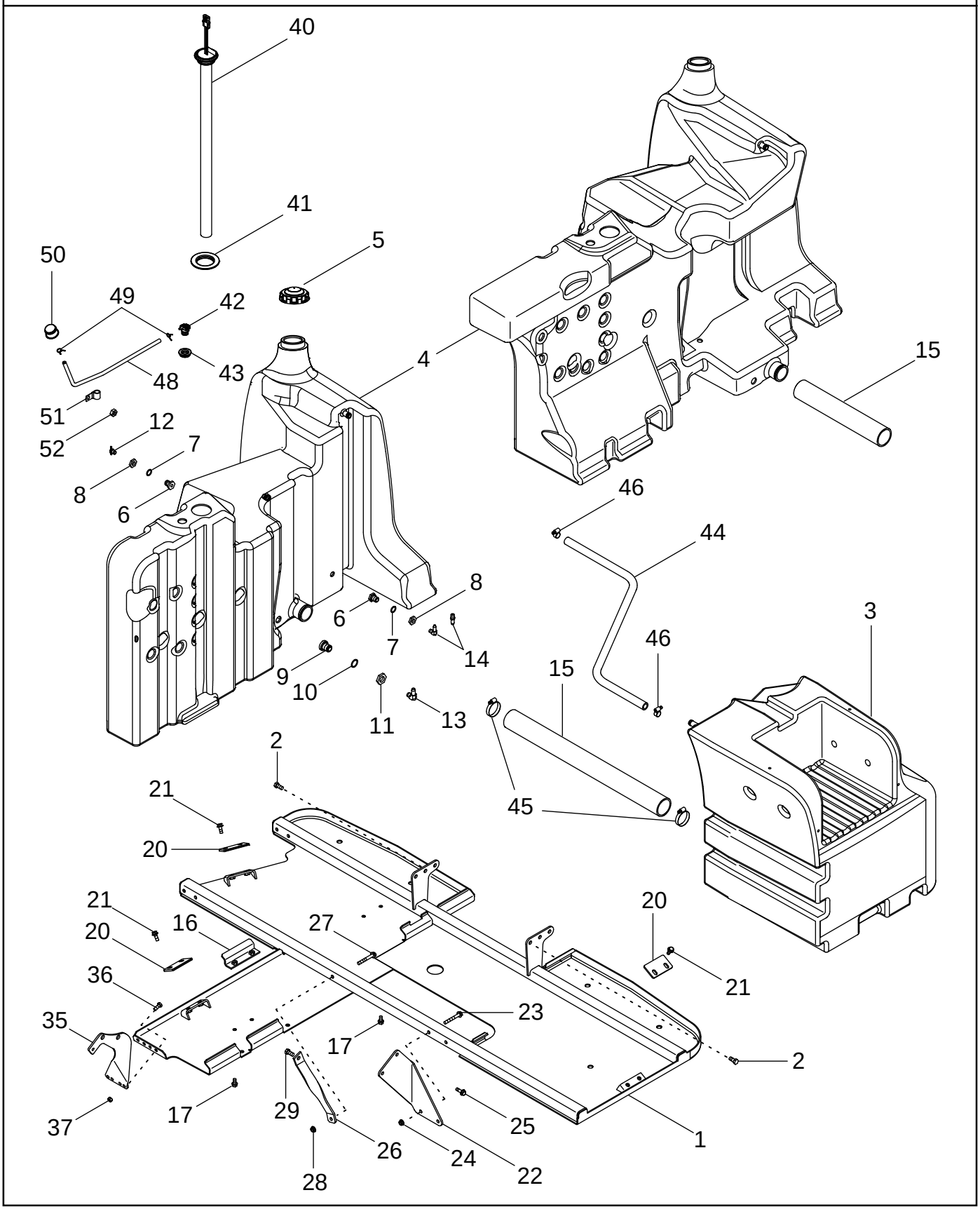

DEPÓSITOS DE COMBUSTIBLE
DEPÓSITOS DE COMBUSTÍVEL
BRANDSTOFTANKS
BRÆNDSTOFTANKE

R	N	P.N.	MOD	Q	Description Denominacion	Descrizione Denominação	Description Beschrijving	Bezeichnung Beskrivelse	L.C.
1		363279A3		1	SUPPORT SOPORTE	SUPPORTO SUPORTE	SUPPORT STEUN	STÜTZE BESLAG	300S
2		627-12025		4	SCREW M12 x 25; 10.9 TORNILLO	VITE PARAFUSO	VIS SCHROEF	SCHRAUBE SKRUE	7450
3		255028A3		1	TANK, FUEL Right Hand, 275 L (73 gal) TANQUE	DEPOSITO, COMBUST TANQUE DE COMBUSTI	RÉSERVOIR CARBURAN TANK, BRANDSTOF	KRAFTSTOFFBEHÄLTER TANK, BRÆNDSTOF	P550
4		255029A4		1	FUEL TANK Left Hand, 235 L (62 gal), Inc. 5 - 14 TANQUE COMBUSTIBLE	SERBATOIO COMBUSTIE DEPOSITO COMBUSTIVE	RESERVOIR DE COMBU BRANDSTOFTANK	KRAFTSTOFFTANK BRÆNDSTOFTANK	108S
4		231242A7		1	FUEL TANK Left Hand, 325 L (86 gal), Inc. 5 - 14 TANQUE COMBUSTIBLE	SERBATOIO COMBUSTIE DEPOSITO COMBUSTIVE	RESERVOIR DE COMBU BRANDSTOFTANK	KRAFTSTOFFTANK BRÆNDSTOFTANK	108S
5		257349A1		1	CAP, FILLER TAPA DE DEPOSITO	TAPPO DI RIEMPIMENTO TAMPA RESERVATORIO	BOUCHON DE REMPL. CAP, FILLER	EINFÜLLDECKEL DÆKSELPÅFYLDER	P676
6		1251790C2		2	FITTING CONEXION	RACCORDO CONEXAO	RACCORD FITTING	ANSCHLUSSSTÜCK FITTING	3300
7		238-5210		2	O-RING 3/4 ID x 1/8 JUNTA HERMETICA	ANELLO TOROIDALE ANEL O	JOINT TORIQUE O-RING	O-RING O-RING	7176
8		1251791C1		1	NUT TUERCA	DADO PORCA	ECROU MOER	MUTTER MØTRIK	010D
9		282708A1		1	FITTING CONEXION	RACCORDO CONEXAO	RACCORD FITTING	ANSCHLUSSSTÜCK FITTING	3300
10		238-5214		1	O-RING 1 ID x 1/8 JUNTA HERMETICA	ANELLO TOROIDALE ANEL O	JOINT TORIQUE O-RING	O-RING O-RING	7176
11		282709A1		1	NUT TUERCA	DADO PORCA	ECROU MOER	MUTTER MØTRIK	010D
12		217-103		1	COCK, DRAIN 1/4 PT LLAVE DE PASO	CRICCO DRENO	ROBINET DE VIDANGE COCK, DRAIN	ABLASSHAHN COCK, DRAIN	Z158
13		217-290		1	ELBOW 90 1/2 barb x 3/8 PT CODO	GOMITO JOELHO	COUDE ELLEBOOG	KNIESTÜCK VINKELROER	085G
14	1	217-293		1	ELBOW 90 3/8 barb x 1/4 PT CODO	GOMITO JOELHO	COUDE ELLEBOOG	KNIESTÜCK VINKELRØR	2940
14	2	217-125		1	FITTING 3/8 x 1/4 in CONEXION	RACCORDO CONEXAO	RACCORD FITTING	ANSCHLUSSSTÜCK FITTING	3300
15	1	283035A1		1	HOSE MANGA	MANICOTTO FLESSIBILE TUBO FLEXIVEL	FLEXIBLE FLEXIBELE BUIS	SCHLAUCH SLANGE	030M
15	2	275798A1		1	HOSE MANGA	MANICOTTO FLESSIBILE TUBO FLEXIVEL	FLEXIBLE FLEXIBELE BUIS	SCHLAUCH SLANGE	030M
16	1	315832A1		2	ANGLE PIEZ ANGULAR	CANTONALE ESQUADRO	CORNIERE HOEKSTUK	WINKEL VINKELSTYKKE	057C
17		905-10020		2	SCREW M10 x 20 TORNILLO	VITE PARAFUSO	VIS SCHROEF	SCHRAUBE SKRUE	7450
20		243779A4		3	PLATE, LARGE PLACA, GRANDE	PIASTRA, LARGA PLACA ESPESSA	PLAQUE, GRANDE PLATE, LARGE	PLATTE, GROSS PLATE, LARGE	Z308

(1) 235 L (62 gal) Fuel Tank
(2) 325 L (86 gal) Fuel Tank

03-20		p2	10/04

FUEL TANKS
SERBATOI DEL COMBUSTIBILE
RÉSERVOIR DE CARBURANT
KRAFTSTOFFTANKS

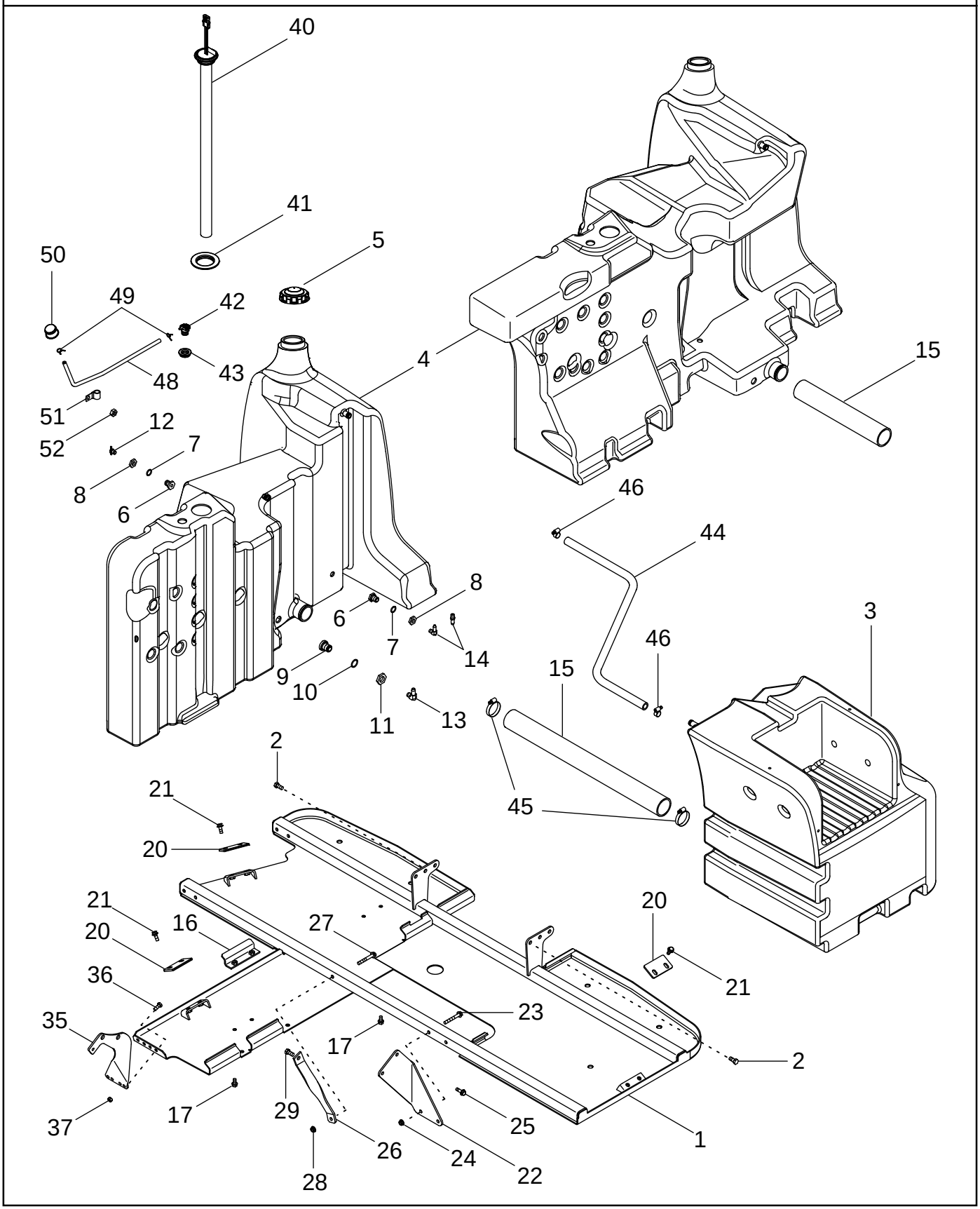

DEPÓSITOS DE COMBUSTIBLE
DEPÓSITOS DE COMBUSTÍVEL
BRANDSTOFTANKS
BRÆNDSTOFTANKE

R	N	P.N.	MOD	Q	Description Denominacion	Descrizione Denominação	Description Beschrijving	Bezeichnung Beskrivelse	L.C.
21		555-5		6	SCREW M10 x 25; 8,8 TORNILLO	VITE PARAFUSO	VIS SCHROEF	SCHRAUBE SKRUE	7450
22		295340A1		1	SUPPORT SOPORTE	SUPPORTO SUPORTE	SUPPORT STEUN	STÜTZE BESLAG	300S
23		857-10075		2	SCREW M10 x 70; 10.9 TORNILLO	VITE PARAFUSO	VIS SCHROEF	SCHRAUBE SKRUE	7450
24		825-2410		2	NUT M10 TUERCA	DADO PORCA	ECROU MOER	MUTTER MØTRIK	010D
25		844-10030		2	SCREW M10 x 30; 8.8 TORNILLO	VITE PARAFUSO	VIS SCHROEF	SCHRAUBE SKRUE	P136
26		258942A1		1	STRAP, SECURING CORREA DE FIJACION	CINGHIA DI FISSAGGIO CORREIA DE FIXACAO	SANGLE DE FIXATION 'BORGRIEM	SICHERUNGSRIEMEN FASTSPAENDINGSSTRC	172C
27		857-10075		1	SCREW M10 x 70; 10.9 TORNILLO	VITE PARAFUSO	VIS SCHROEF	SCHRAUBE SKRUE	7450
28		825-2410		1	NUT M10 TUERCA	DADO PORCA	ECROU MOER	MUTTER MØTRIK	010D
29		627-12025		1	SCREW M12 x 25; 10.9 TORNILLO	VITE PARAFUSO	VIS SCHROEF	SCHRAUBE SKRUE	7450
35		301790A3		1	BRACKET PIEZA DE SOPORTE	STAFFA BRACADEIRA	PATTE FIXATION STEUNBEUGEL	HALTERUNG BESLAG	225S
36		514-745		2	SCREW M10 x 20; 8,8 TORNILLO	VITE PARAFUSO	VIS SCHROEF	SCHRAUBE SKRUE	7450
37		829-1510		2	NUT M10 TUERCA	DADO PORCA	ECROU MOER	MUTTER MØTRIK	5780
40		237399A5		1	GAUGE, FUEL Fuel Level RELOG GAS-OIL	INDICATORE, COMBUST INDICADOR COMBUSTIV	JAUGE DE CARBURANT GAUGE, FUEL	KRAFTSTOFFANZIEGE GAUGE, FUEL	P664
41		255095A1		1	GROMMET PASACABLES	ANELLO PASSACAVO CASQUILHO ISOLADOR	PASSE-FIL KABELDOORGANG	TÜLLE RING	131A
42		275800A1		1	VALVE STEM VASTAGO DE VALVULA	STELO DELLA VALVOLA HASTE DA VALVULA	TIGE DE SOUPAPE VALVE STEM	VENTILSCHAFT STILKVENTIL	P397
43		255094A1		1	GROMMET PASACABLES	ANELLO PASSACAVO CASQUILHO ISOLADOR	PASSE-FIL KABELDOORGANG	TÜLLE RING	131A
44		275799A2		1	HOSE MANGA	MANICOTTO FLESSIBILE TUBO FLEXIVEL	FLEXIBLE FLEXIBELE BUIS	SCHLAUCH SLANGE	030M
45		214-3248		2	CLAMP 2-1/4 x 3-1/8 COLLAR	MORSETTO BRACADEIRA	COLLIER CLAMP	SCHELLE CLAMP	1640
46		214-1516		2	CLAMP 13/16 - 1-1/2 COLLAR	MORSETTO BRACADEIRA	COLLIER CLAMP	SCHELLE CLAMP	1640
48		275801A1		1	HOSE MANGA	MANICOTTO FLESSIBILE TUBO FLEXIVEL	FLEXIBLE FLEXIBELE BUIS	SCHLAUCH SLANGE	030M
49		214-1308		2	CLAMP 1/2 COLLAR	MORSETTO BRACADEIRA	COLLIER CLAMP	SCHELLE CLAMP	1640
50		316078A2		1	BREATHER RESPIRADERO	SFIATATOIO RESPIRADOR	RENIFLARD ONTLUCHTER	ENTLÜFTER UDLUFTNINGSSKRUE	145S
51		515-22159		1	CLAMP 5/8 ID COLLAR	MORSETTO BRACADEIRA	COLLIER CLAMP	SCHELLE CLAMP	1640
52		825-2408		1	NUT M8 TUERCA	DADO PORCA	ECROU MOER	MUTTER MØTRIK	5780

03-21		p1	09/04

FUEL LINES WITH INLINE FILTER, MX210 AND MX230
TUBI DI ALIMENTAZIONE DEL COMBUSTIBILE CON FILTRO IN LINEA, MX210 E MX230
CONDUITES DE CARBURANT AVEC FILTRE EN LIGNE, MX210 ET MX230
KRAFTSTOFFLEITUNGEN MIT INLINE-FILTER, MX210 UND MX230

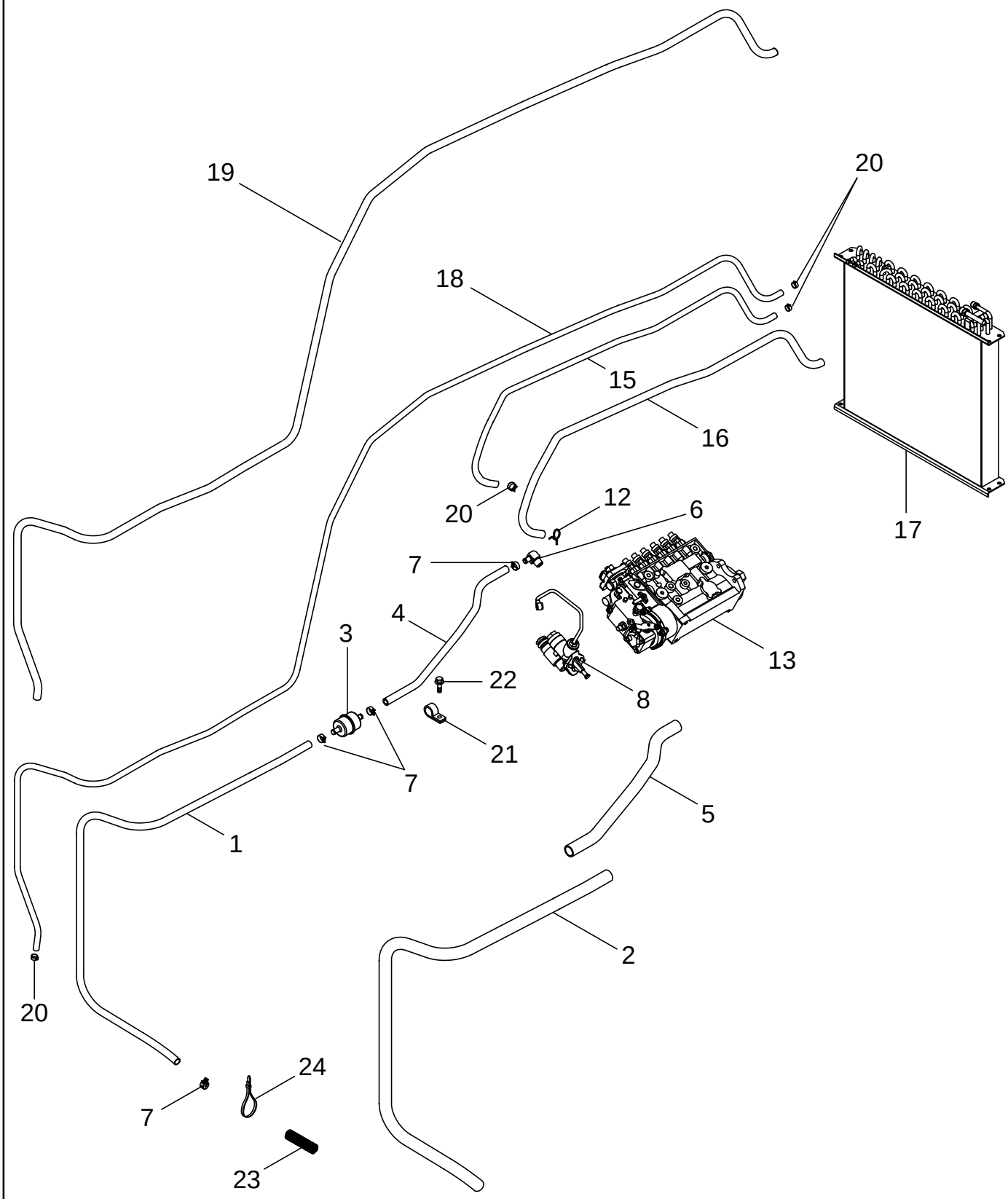

CONDUCTOS DE COMBUSTIBLE CON FILTRO EN LÍNEA, MX210 Y MX230
LINHAS DE COMBUSTÍVEL COM FILTRO EM LINHA, MX210 E MX230
BRANDSTOFLEIDING MET LEIDINGFILTER, MX210 EN MX230
BRÆNDSTOFSLANGER MED INLINE-FILTER, MX210 OG MX230

R	N	P.N.	MOD	Q	Description Denominacion	Descrizione Denominação	Description Beschrijving	Bezeichnung Beskrivelse	L.C.
1		87404609		1	HOSE 1380 mm (54-11/32 in)				
						MANICOTTO FLESSIBILE	FLEXIBLE	SCHLAUCH	030M
					MANGA	TUBO FLEXIVEL	FLEXIBELE BUIS	SLANGE	
2		87404610		1	CONDUIT 1310 mm (51-9/16 in)				
						CONDOTTA	CONDUIT	LEITUNG	1920
					TUBERIA	CONDUITE	CONDUIT	RENDE	
3		194199A1		1	FILTER, STRAINER	RETICELLA DEL FILTRO	CREPINE DE FILTRE	GROBFILTERELEMENT	043R
					REJILLA DEL FILTRO	REDE DE FILTRO	FILTERZEEF	FILTERNET	
4		87404617		1	HOSE 960 mm (37-3/16 in)	MANICOTTO FLESSIBILE	FLEXIBLE	SCHLAUCH	030M
					MANGA	TUBO FLEXIVEL	FLEXIBELE BUIS	SLANGE	
5		87404618		1	CONDUIT 885 mm (34-27/32 in)				
						CONDOTTA	CONDUIT	LEITUNG	1920
					TUBERIA	CONDUITE	CONDUIT	RENDE	
6		197095A1		1	ELBOW	GOMITO	COUDE	KNIESTÜCK	085G
					CODO	JOELHO	ELLEBOOG	VINKELROER	
7		214-1408		4	CLAMP 1/2 - 29/32	MORSETTO	COLLIER	SCHELLE	1640
					COLLAR	BRACADEIRA	CLAMP	CLAMP	
8	1	REF		1	INSTRUCTION Pump	ISTRUZIONI	NOTICE	HINWEIS	Z571
					MANUAL	INSTRUCAO	INSTRUCTION	SKO, INDRE	
12		214-1706		1	CLAMP 7/16 - 3/4	MORSETTO	COLLIER	SCHELLE	1640
					COLLAR	BRACADEIRA	CLAMP	CLAMP	
13	2	REF		1	INSTRUCTION Pump, Injection				
						ISTRUZIONI	NOTICE	HINWEIS	Z571
					MANUAL	INSTRUCAO	INSTRUCTION	SKO, INDRE	
15		NSS		1	NOT SERVICED SEPARATELY HOSE, 1215 mm (48 in), Cut From 194882A1				
						NON FORNITO SEPARAT	NON FOURNI SEPAREMI	KEIN ERSATZTEIL	064N
					NO SE REPARA SEPARA	NOT SERVICED SEPARA	NIET ALLEEN VERKRIJG	NOT SERVICED SEPARA	
16		87414517		1	CONDUIT 1145 mm (45 in), Cut From 291262A2				
						CONDOTTA	CONDUIT	LEITUNG	1920
					TUBERIA	CONDUITE	CONDUIT	RENDE	
17	3	REF		1	INSTRUCTION Cooler	ISTRUZIONI	NOTICE	HINWEIS	Z571
					MANUAL	INSTRUCAO	INSTRUCTION	SKO, INDRE	
18		284736A2		1	HOSE 4000 mm (158 in)	MANICOTTO FLESSIBILE	FLEXIBLE	SCHLAUCHMUFFE	4480
					MANGA	TUBO FLEXIVEL	FLEXIBELE BUIS	SLANGE	
19		363250A1		1	CONDUIT	CONDOTTA	CONDUIT	LEITUNG	1920
					TUBERIA	CONDUITE	CONDUIT	RENDE	
20		1348264C1		4	CLAMP, HOSE 3/8 ID	MORSETTO	BRIDE, FLEXIBLE	SCHLAUCHKLEMME	P729
					ABRAZADERA MANGUEI	BRACADEIRA MANGUEIR	CLAMP, HOSE	CLAMP, HOSE	
21		229357A1		1	CLAMP	MORSETTO	COLLIER	SCHELLE	1640
					COLLAR	BRACADEIRA	CLAMP	CLAMP	
22		844-8012		1	SCREW M8 x 12; 8.8	VITE	VIS	SCHRAUBE	7450
					TORNILLO	PARAFUSO	SCHROEF	SKRUE	
23		87435416	a	1	SPRING Fuel Hose Guard	MOLLA	RESSORT	FEDER	100M
					RESORTE	MOLA	VEER	FJEDER	

(1) See Figure 03-04
(2) See Figure 03-07
(3) See Figure 09-39
(a) ASN JAZ129998

FUEL LINES WITH INLINE FILTER, MX210 AND MX230
TUBI DI ALIMENTAZIONE DEL COMBUSTIBILE CON FILTRO IN LINEA, MX210 E MX230
CONDUITES DE CARBURANT AVEC FILTRE EN LIGNE, MX210 ET MX230
KRAFTSTOFFLEITUNGEN MIT INLINE-FILTER, MX210 UND MX230

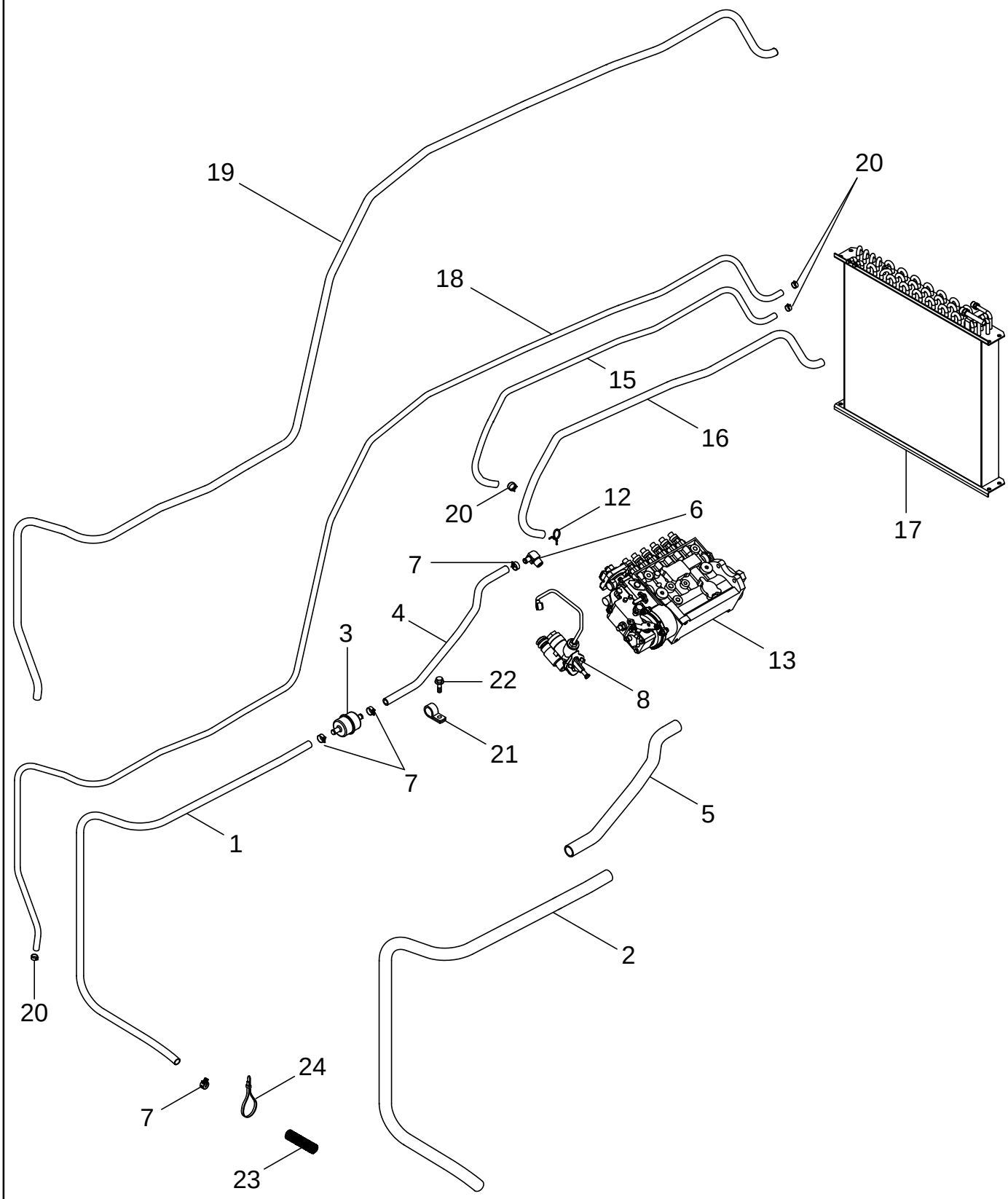

CONDUCTOS DE COMBUSTIBLE CON FILTRO EN LÍNEA, MX210 Y MX230
LINHAS DE COMBUSTÍVEL COM FILTRO EM LINHA, MX210 E MX230
BRANDSTOFLEIDING MET LEIDINGFILTER, MX210 EN MX230
BRÆNDSTOFSLANGER MED INLINE-FILTER, MX210 OG MX230

R	N	P.N.	MOD	Q	Description Denominacion	Descrizione Denominação	Description Beschrijving	Bezeichnung Beskrivelse	L.C.
24		**L18331**	a	1	STRAP Tie BANDA	BANDELLA BANDA	SANGLE RIEM	GURT STROP	532B

(a) ASN JAZ129998

03-22		p1	11/04

FUEL LINES WITH SEPARATOR FILTER, MX210 AND MX230
TUBI DI ALIMENTAZIONE DEL COMBUSTIBILE CON FILTRO SEPARATORE, MX210 E MX230
CONDUITES DE CARBURANT AVEC FILTRE SÉPARATEUR, MX210 ET MX230
KRAFTSTOFFLEITUNGEN MIT ABSCHEIDERFILTER, MX210 UND MX230

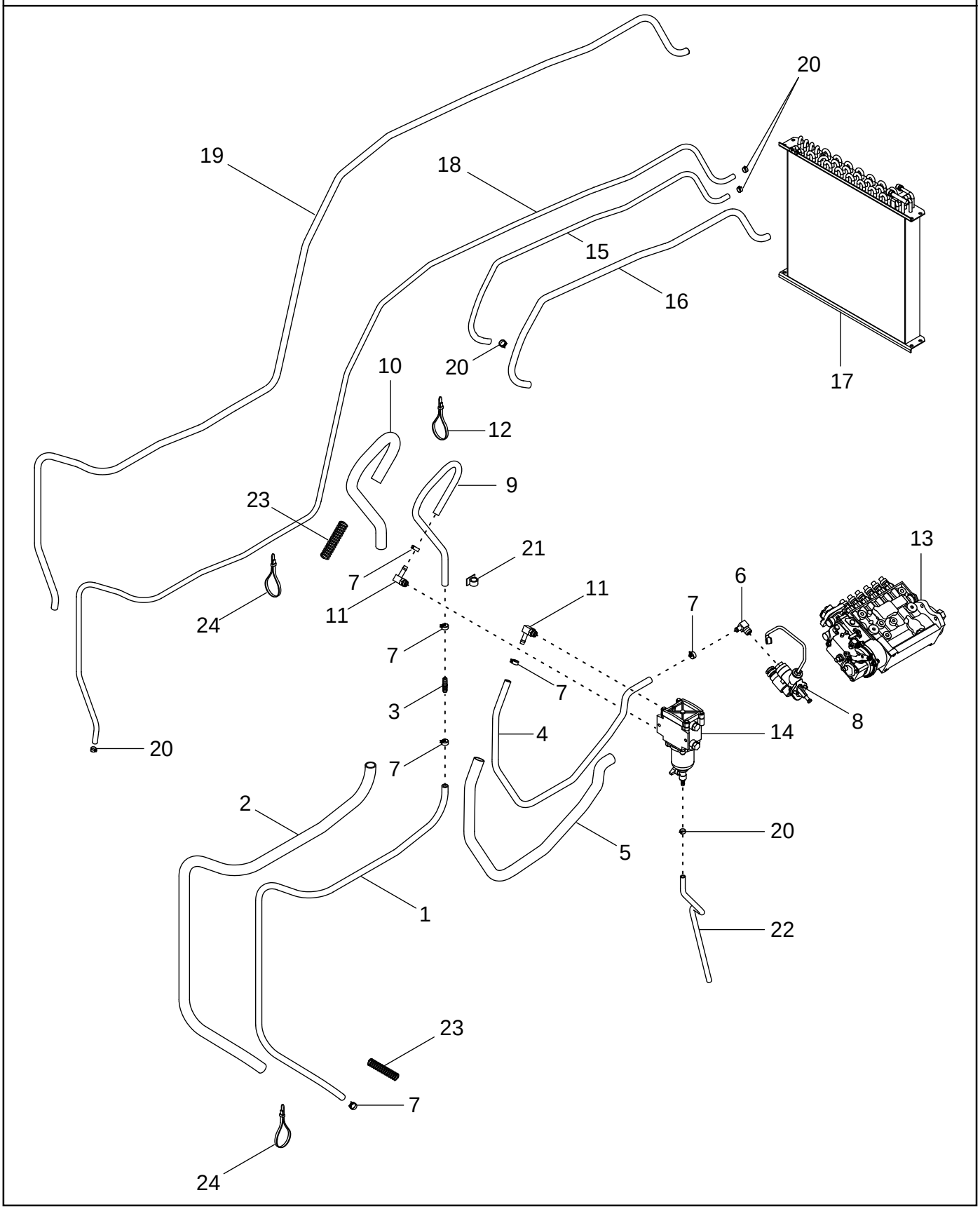

CONDUCTOS DE COMBUSTIBLE CON FILTRO SEPARADOR, MX210 Y MX230
LINHAS DE COMBUSTÍVEL COM FILTRO SEPARADOR, MX210 E MX230
BRANDSTOFLEIDING MET SCHEIDINGSFILTER, MX210 EN MX230
BRÆNDSTOFSLANGER MED UDSKILLERFILTER, MX210 OG MX230

R	N	P.N.	MOD	Q	Description Denominacion	Descrizione Denominação	Description Beschrijving	Bezeichnung Beskrivelse	L.C.
1		284735A2		1	HOSE 1570 mm (61-13/16 in)				
						MANICOTTO FLESSIBILE	FLEXIBLE	SCHLAUCH	030M
					MANGA	TUBO FLEXIVEL	FLEXIBELE BUIS	SLANGE	
2		291260A2		1	CONDUIT 1500 mm (59 in)	CONDOTTA	CONDUIT	LEITUNG	1920
					TUBERIA	CONDUITE	CONDUIT	RENDE	
3		336427A1		1	COUPLING Hose, 1/2 in	TESTA A CAMPANA	CHAPE	GLOCKENKOPF	109T
					ELEMENTO DE ACOPLAI	ELEMENTO DE ACOPLAI	KOPPELING	KOBLING	
4		356413A3		1	HOSE Fuel Filter Outlet, 1325 mm (52-11/64 in)				
						MANICOTTO FLESSIBILE	FLEXIBLE	SCHLAUCHMUFFE	4480
					MANGA	TUBO FLEXIVEL	FLEXIBELE BUIS	SLANGE	
5		356415A2		1	CONDUIT 1240 mm (48-13/16 in)				
						CONDOTTA	CONDUIT	LEITUNG	1920
					TUBERIA	CONDUITE	CONDUIT	RENDE	
6		372110A1		1	FITTING Elbow, 90 Degree	RACCORDO	RACCORD	ANSCHLUSSSTÜCK	3300
					CONEXION	CONEXAO	FITTING	FITTING	
7		214-1408		6	CLAMP 1/2 - 29/32	MORSETTO	COLLIER	SCHELLE	1640
					COLLAR	BRACADEIRA	CLAMP	CLAMP	
8	1	REF		1	INSTRUCTION Pump	ISTRUZIONI	NOTICE	HINWEIS	Z571
					MANUAL	INSTRUCAO	INSTRUCTION	SKO, INDRE	
9		356412A1		1	HOSE Fuel Filter Supply, 900 mm (35-7/16 in)				
						MANICOTTO FLESSIBILE	FLEXIBLE	SCHLAUCHMUFFE	4480
					MANGA	TUBO FLEXIVEL	FLEXIBELE BUIS	SLANGE	
10		356414A1		1	CONDUIT 830 mm (32-11/16 in)				
						CONDOTTA	CONDUIT	LEITUNG	1920
					TUBERIA	CONDUITE	CONDUIT	RENDE	
11		217-348		2	FITTING 1/2 stem x 3/4 Or	RACCORDO	RACCORD	ANSCHLUSSSTÜCK	3300
					CONEXION	CONEXAO	FITTING	FITTING	
12		A169433		1	STRAP, SECURING Tie	CINGHIA DI FISSAGGIO	SANGLE DE FIXATION	SICHERUNGSRIEMEN	172C
					CORREA DE FIJACION	CORREIA DE FIXACAO	'BORGRIEM	FASTSPAENDINGSSTRC	
13	2	REF		1	INSTRUCTION Pump, Injection				
						ISTRUZIONI	NOTICE	HINWEIS	Z571
					MANUAL	INSTRUCAO	INSTRUCTION	SKO, INDRE	
14	3	336429A2		1	FILTER, FUEL	FILTRO COMBUSTIBILE	FILTRE A COMBUSTIBLE	KRAFTSTOFFILTER	064F
					FILTRO DE COMBUSTIBI	FILTRO DE COMBUSTIVI	BRANDSTOFFILTER	BRAENDSTOFFILTER	
15		NSS		1	NOT SERVICED SEPARATELY HOSE, 1215 mm (48 in), Cut From 194882A1				
						NON FORNITO SEPARAT	NON FOURNI SEPAREMI	KEIN ERSATZTEIL	064N
					NO SE REPARA SEPARA	NOT SERVICED SEPARA	NIET ALLEEN VERKRIJG	NOT SERVICED SEPARA	
16		87414517		1	CONDUIT 1145 mm (45 in), Cut From 291262A2				
						CONDOTTA	CONDUIT	LEITUNG	1920
					TUBERIA	CONDUITE	CONDUIT	RENDE	
17	4	REF		1	INSTRUCTION Cooler	ISTRUZIONI	NOTICE	HINWEIS	Z571
					MANUAL	INSTRUCAO	INSTRUCTION	SKO, INDRE	
18		284736A3		1	HOSE 4150 mm (163-3/8 in)				
						MANICOTTO FLESSIBILE	FLEXIBLE	SCHLAUCH	030M
					MANGA	TUBO FLEXIVEL	FLEXIBELE BUIS	SLANGE	

(1) See Figure 03-04
(2) See Figure 03-07
(3) See Figure 03-25
(4) See Figure 09-39

FUEL LINES WITH SEPARATOR FILTER, MX210 AND MX230
TUBI DI ALIMENTAZIONE DEL COMBUSTIBILE CON FILTRO SEPARATORE, MX210 E MX230
CONDUITES DE CARBURANT AVEC FILTRE SÉPARATEUR, MX210 ET MX230
KRAFTSTOFFLEITUNGEN MIT ABSCHEIDERFILTER, MX210 UND MX230

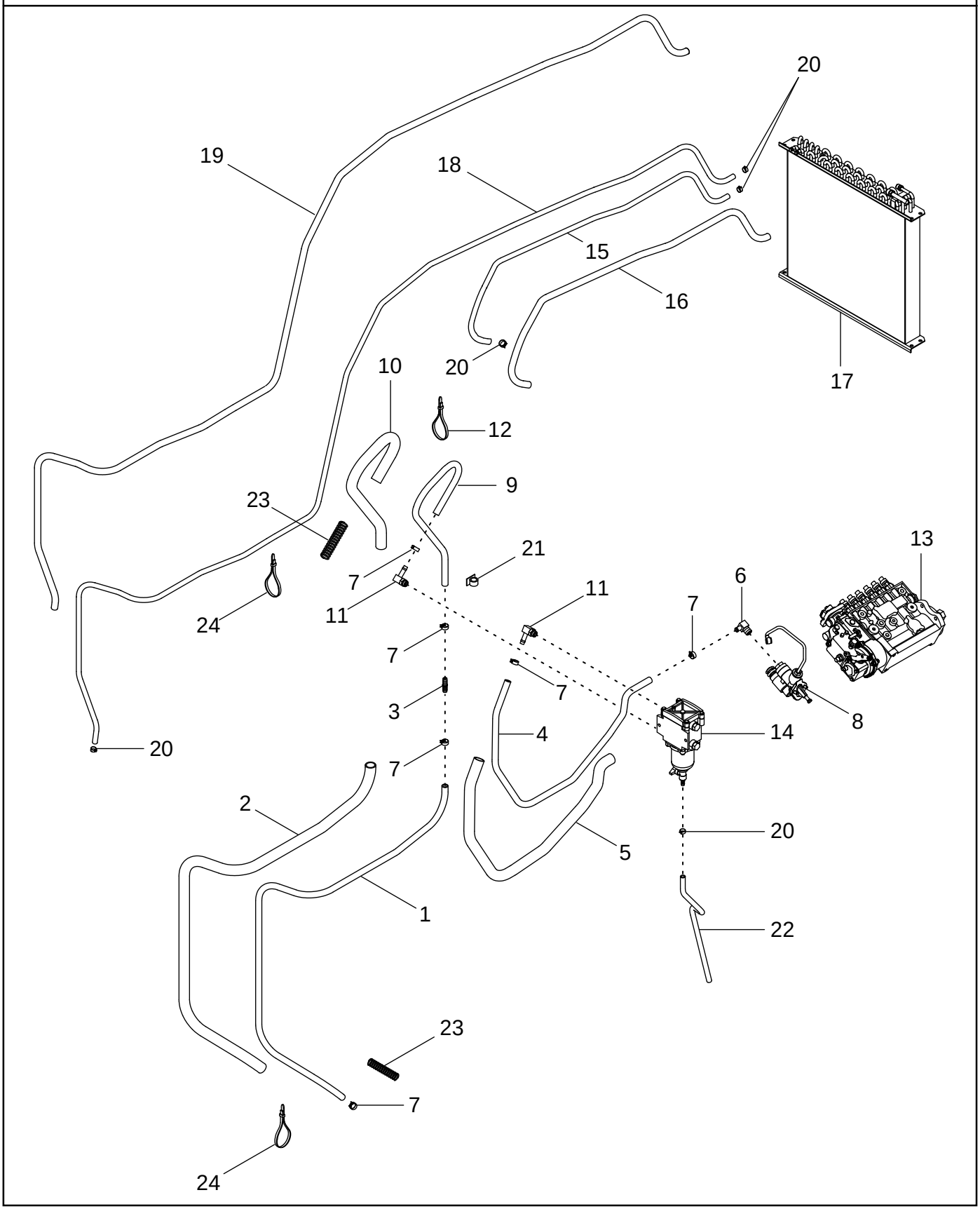

CONDUCTOS DE COMBUSTIBLE CON FILTRO SEPARADOR, MX210 Y MX230
LINHAS DE COMBUSTÍVEL COM FILTRO SEPARADOR, MX210 E MX230
BRANDSTOFLEIDING MET SCHEIDINGSFILTER, MX210 EN MX230
BRÆNDSTOFSLANGER MED UDSKILLERFILTER, MX210 OG MX230

R	N	P.N.	MOD	Q	Description Denominacion	Descrizione Denominação	Description Beschrijving	Bezeichnung Beskrivelse	L.C.
19		363250A2		1	CONDUIT 4080 mm (160-5/8 in)				
						CONDOTTA	CONDUIT	LEITUNG	1920
					TUBERIA	CONDUITE	CONDUIT	RENDE	
20		1348264C1		5	CLAMP, HOSE 3/8 ID	MORSETTO	BRIDE, FLEXIBLE	SCHLAUCHKLEMME	P729
					ABRAZADERA MANGUEI	BRACADEIRA MANGUEIF	CLAMP, HOSE	CLAMP, HOSE	
21		169850C2		1	ANCHOR	ANCORAGGIO	PIECE DE FIXATION	VERANKERUNG	0120
					FIJACION	FIXADOR	ANKER	ANKER	
22		360525A1		1	HOSE Filter Drain, 700 mm (27-9/16 in)				
						MANICOTTO FLESSIBILE	FLEXIBLE	SCHLAUCH	030M
					MANGA	TUBO FLEXIVEL	FLEXIBELE BUIS	SLANGE	
23		87435416		2	SPRING Fuel Hose Guard	MOLLA	RESSORT	FEDER	100M
					RESORTE	MOLA	VEER	FJEDER	
24		L18331		2	STRAP Tie	BANDELLA	SANGLE	GURT	532B
					BANDA	BANDA	RIEM	STROP	

03-23		p1	11/04

FUEL LINES WITH INLINE FILTER, MX255 AND MX285
TUBI DI ALIMENTAZIONE DEL COMBUSTIBILE CON FILTRO IN LINEA, MX255 E MX285
CONDUITES DE CARBURANT AVEC FILTRE EN LIGNE, MX255 ET MX285
KRAFTSTOFFLEITUNGEN MIT INLINE-FILTER, MX255 UND MX285

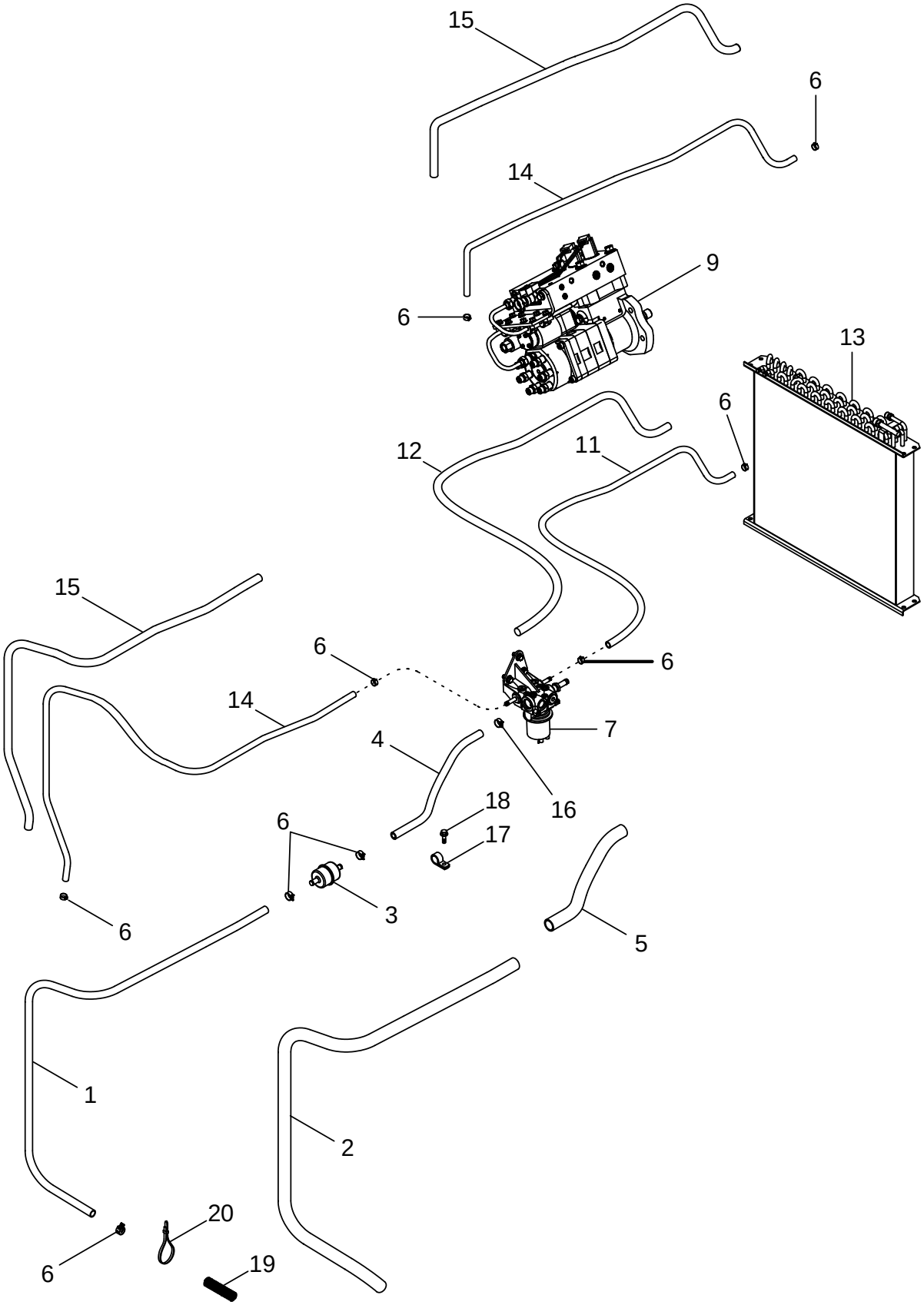

CONDUCTOS DE COMBUSTIBLE CON FILTRO EN LÍNEA, MX255 Y MX285
LINHAS DE COMBUSTÍVEL COM FILTRO EM LINHA, MX255 E MX285
BRANDSTOFLEIDING MET LEIDINGFILTER, MX255 EN MX285
BRÆNDSTOFSLANGER MED INLINE-FILTER, MX255 OG MX285

R	N	P.N.	MOD	Q	Description Denominacion	Descrizione Denominação	Description Beschrijving	Bezeichnung Beskrivelse	L.C.
1		87404609		1	HOSE 1380 mm (54-11/32 in)				
						MANICOTTO FLESSIBILE	FLEXIBLE	SCHLAUCH	030M
					MANGA	TUBO FLEXIVEL	FLEXIBELE BUIS	SLANGE	
2		87404610		1	CONDUIT 1310 mm (51-9/16 in)				
						CONDOTTA	CONDUIT	LEITUNG	1920
					TUBERIA	CONDUITE	CONDUIT	RENDE	
3		194199A1		1	FILTER, STRAINER	RETICELLA DEL FILTRO	CREPINE DE FILTRE	GROBFILTERELEMENT	043R
					REJILLA DEL FILTRO	REDE DE FILTRO	FILTERZEEF	FILTERNET	
4		87404615		1	HOSE 735 mm (28-15/16 in)				
						MANICOTTO FLESSIBILE	FLEXIBLE	SCHLAUCH	030M
					MANGA	TUBO FLEXIVEL	FLEXIBELE BUIS	SLANGE	
5		87404616		1	CONDUIT 665 mm (26-3/16 in)				
						CONDOTTA	CONDUIT	LEITUNG	1920
					TUBERIA	CONDUITE	CONDUIT	RENDE	
6		1348264C1		6	CLAMP, HOSE 3/8 ID	MORSETTO	BRIDE, FLEXIBLE	SCHLAUCHKLEMME	P729
					ABRAZADERA MANGUEI	BRACADEIRA MANGUEIF	CLAMP, HOSE	CLAMP, HOSE	
7	1	REF		1	INSTRUCTION Pump	ISTRUZIONI	NOTICE	HINWEIS	Z571
					MANUAL	INSTRUCAO	INSTRUCTION	SKO, INDRE	
9	2	J4076442		1	PUMP, FUEL INJECTION	POMPA INIEZIONE	POMPE INJECTION	KRAFTSTOFFEINSPRITZ	158P
					BOMBA DE INYECCION	BOMBA DE INJECCAO	INJECTIEPOMP	INDSPROEJTNINGSPUM	
11		292457A2		1	HOSE 1415 mm (56 in), Cut From 284736A2				
						MANICOTTO FLESSIBILE	FLEXIBLE	SCHLAUCHMUFFE	4480
					MANGA	TUBO FLEXIVEL	FLEXIBELE BUIS	SLANGE	
12		291507A2		1	CONDUIT 1345 mm (53 in), Cut From 291262A2				
						CONDOTTA	CONDUIT	LEITUNG	1920
					TUBERIA	CONDUITE	CONDUIT	RENDE	
13	3	REF		1	INSTRUCTION Cooler	ISTRUZIONI	NOTICE	HINWEIS	Z571
					MANUAL	INSTRUCAO	INSTRUCTION	SKO, INDRE	
14		327835A1		2	HOSE 1865 mm (74 in) , Cut From 284736A2				
						MANICOTTO FLESSIBILE	FLEXIBLE	SCHLAUCHMUFFE	4480
					MANGA	TUBO FLEXIVEL	FLEXIBELE BUIS	SLANGE	
15		327836A1		2	HOSE 1795 mm (71 in) , Cut From 291262A2				
						MANICOTTO FLESSIBILE	FLEXIBLE	SCHLAUCHMUFFE	4480
					MANGA	TUBO FLEXIVEL	FLEXIBELE BUIS	SLANGE	
16		196252A1		4	CLAMP	MORSETTO	COLLIER	SCHELLE	1640
					COLLAR	BRACADEIRA	CLAMP	CLAMP	
17		229357A1		1	CLAMP	MORSETTO	COLLIER	SCHELLE	1640
					COLLAR	BRACADEIRA	CLAMP	CLAMP	
18		844-8012		1	SCREW M8 x 12; 8.8	VITE	VIS	SCHRAUBE	7450
					TORNILLO	PARAFUSO	SCHROEF	SKRUE	
19		87435416	a	1	SPRING Fuel Hose Guard	MOLLA	RESSORT	FEDER	100M
					RESORTE	MOLA	VEER	FJEDER	
20		L18331	a	1	STRAP Tie	BANDELLA	SANGLE	GURT	532B
					BANDA	BANDA	RIEM	STROP	

(1) See Figure 03-05
(2) See Figure 03-08
(3) See Figure 09-39
(a) ASN JAZ129998

03-24		p1	11/04

FUEL LINES WITH SEPARATOR FILTER, MX255 AND MX285
TUBI DI ALIMENTAZIONE DEL COMBUSTIBILE CON FILTRO SEPARATORE, MX255 E MX285
CONDUITES DE CARBURANT AVEC FILTRE SÉPARATEUR, MX255 ET MX285
KRAFTSTOFFLEITUNGEN MIT ABSCHEIDERFILTER, MX255 UND MX285

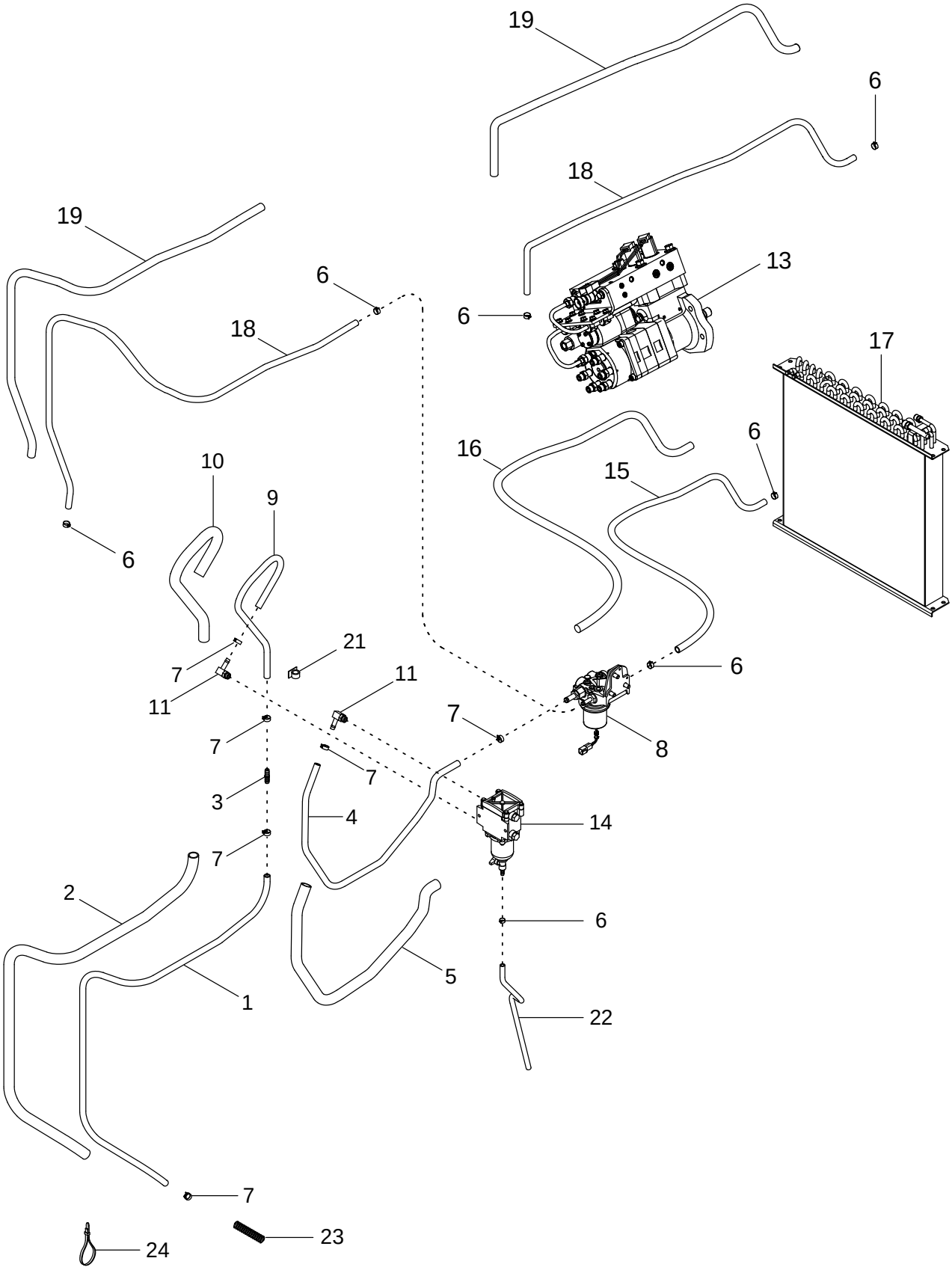

CONDUCTOS DE COMBUSTIBLE CON FILTRO SEPARADOR, MX255 Y MX285
LINHAS DE COMBUSTÍVEL COM FILTRO SEPARADOR, MX255 E MX285
BRANDSTOFLEIDING MET SCHEIDINGSFILTER, MX255 EN MX285
BRÆNDSTOFSLANGER MED UDSKILLERFILTER, MX255 OG MX285

R	N	P.N.	MOD	Q	Description Denominacion	Descrizione Denominação	Description Beschrijving	Bezeichnung Beskrivelse	L.C.
1		284735A2		1	HOSE 1570 mm (61-13/16 in)				
						MANICOTTO FLESSIBILE	FLEXIBLE	SCHLAUCH	030M
					MANGA	TUBO FLEXIVEL	FLEXIBELE BUIS	SLANGE	
2		291260A2		1	CONDUIT 1500 mm (59 in)	CONDOTTA	CONDUIT	LEITUNG	1920
					TUBERIA	CONDUITE	CONDUIT	RENDE	
3		336427A1		1	COUPLING Hose, 1/2 in	TESTA A CAMPANA	CHAPE	GLOCKENKOPF	109T
					ELEMENTO DE ACOPLAI	ELEMENTO DE ACOPLAI	KOPPELING	KOBLING	
4		87447003		1	HOSE Fuel Filter Outlet, 1090 mm (42-29/32 in)				
						MANICOTTO FLESSIBILE	FLEXIBLE	SCHLAUCH	030M
					MANGA	TUBO FLEXIVEL	FLEXIBELE BUIS	SLANGE	
5		87447004		1	CONDUIT 1000 mm (39-3/8 in)				
						CONDOTTA	CONDUIT	LEITUNG	1920
					TUBERIA	CONDUITE	CONDUIT	RENDE	
6		1348264C1		7	CLAMP, HOSE 3/8 ID	MORSETTO	BRIDE, FLEXIBLE	SCHLAUCHKLEMME	P729
					ABRAZADERA MANGUEI	BRACADEIRA MANGUEIF	CLAMP, HOSE	CLAMP, HOSE	
7		214-1408		6	CLAMP 1/2 - 29/32	MORSETTO	COLLIER	SCHELLE	1640
					COLLAR	BRACADEIRA	CLAMP	CLAMP	
8	1	REF		1	INSTRUCTION Pump	ISTRUZIONI	NOTICE	HINWEIS	Z571
					MANUAL	INSTRUCAO	INSTRUCTION	SKO, INDRE	
9		356412A1		1	HOSE Fuel Filter Supply, 900 mm (35-7/16 in)				
						MANICOTTO FLESSIBILE	FLEXIBLE	SCHLAUCHMUFFE	4480
					MANGA	TUBO FLEXIVEL	FLEXIBELE BUIS	SLANGE	
10		356414A1		1	CONDUIT 830 mm (32-11/16 in)				
						CONDOTTA	CONDUIT	LEITUNG	1920
					TUBERIA	CONDUITE	CONDUIT	RENDE	
11		217-348		2	FITTING 1/2 stem x 3/4 Or	RACCORDO	RACCORD	ANSCHLUSSSTÜCK	3300
					CONEXION	CONEXAO	FITTING	FITTING	
13	2	REF		1	INSTRUCTION Pump, Injection				
						ISTRUZIONI	NOTICE	HINWEIS	Z571
					MANUAL	INSTRUCAO	INSTRUCTION	SKO, INDRE	
14	3	336429A2		1	FILTER, FUEL	FILTRO COMBUSTIBILE	FILTRE A COMBUSTIBLE	KRAFTSTOFFILTER	064F
					FILTRO DE COMBUSTIBI	FILTRO DE COMBUSTIVI	BRANDSTOFFILTER	BRAENDSTOFFILTER	
15		292457A2		1	HOSE 1415 mm (56 in), Cut From 284736A2				
						MANICOTTO FLESSIBILE	FLEXIBLE	SCHLAUCHMUFFE	4480
					MANGA	TUBO FLEXIVEL	FLEXIBELE BUIS	SLANGE	
16		291507A2		1	CONDUIT 1345 mm (53 in), Cut From 291262A2				
						CONDOTTA	CONDUIT	LEITUNG	1920
					TUBERIA	CONDUITE	CONDUIT	RENDE	
17	4	REF		1	INSTRUCTION Cooler	ISTRUZIONI	NOTICE	HINWEIS	Z571
					MANUAL	INSTRUCAO	INSTRUCTION	SKO, INDRE	
18		327835A1		2	HOSE 1865 mm (74 in) , Cut From 284736A2				
						MANICOTTO FLESSIBILE	FLEXIBLE	SCHLAUCHMUFFE	4480
					MANGA	TUBO FLEXIVEL	FLEXIBELE BUIS	SLANGE	

(1) See Figure 03-05
(2) See Figure 03-08
(3) See Figure 03-25
(4) See Figure 09-39

03-24		p2	11/04

FUEL LINES WITH SEPARATOR FILTER, MX255 AND MX285
TUBI DI ALIMENTAZIONE DEL COMBUSTIBILE CON FILTRO SEPARATORE, MX255 E MX285
CONDUITES DE CARBURANT AVEC FILTRE SÉPARATEUR, MX255 ET MX285
KRAFTSTOFFLEITUNGEN MIT ABSCHEIDERFILTER, MX255 UND MX285

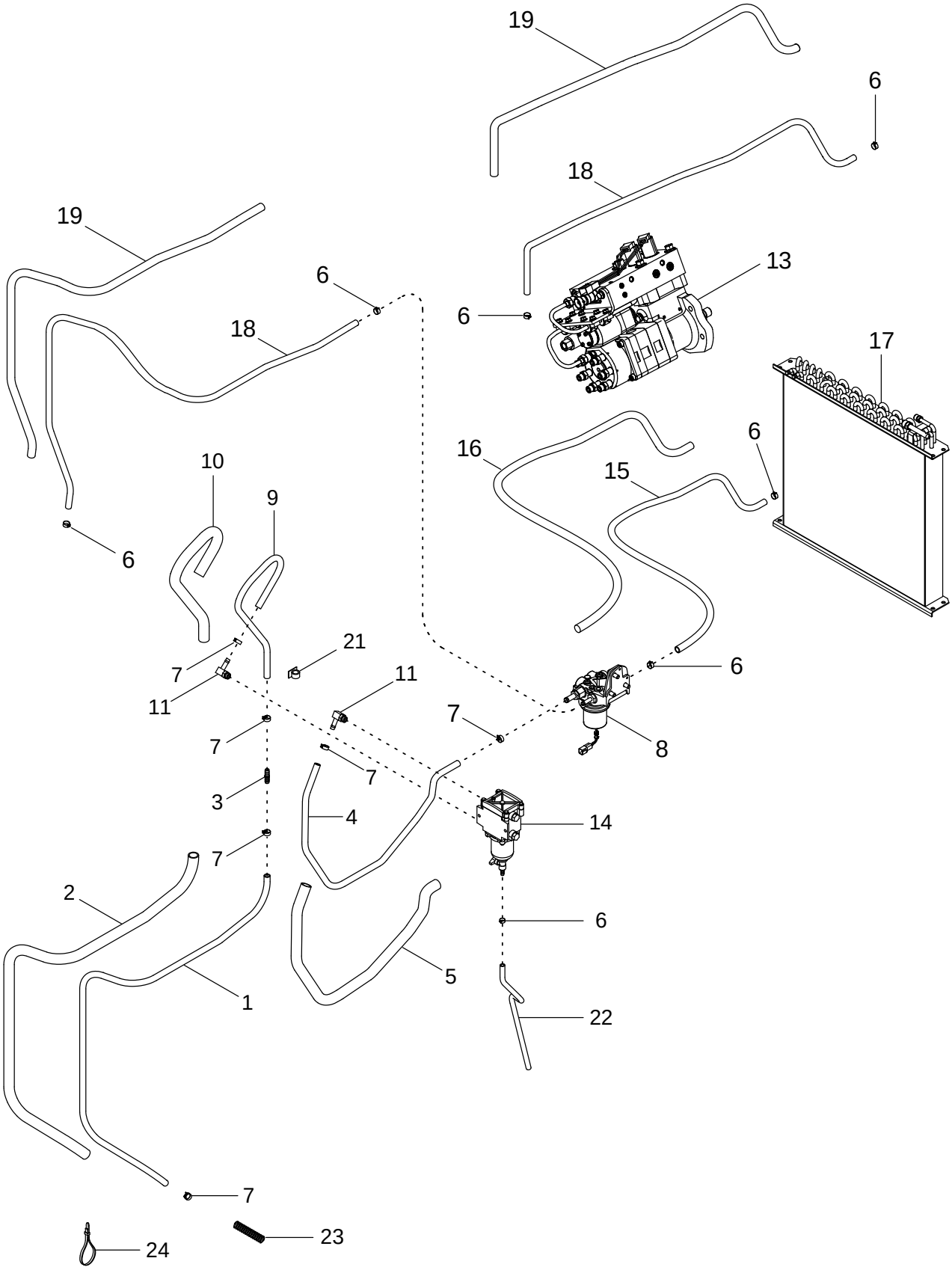

CONDUCTOS DE COMBUSTIBLE CON FILTRO SEPARADOR, MX255 Y MX285
LINHAS DE COMBUSTÍVEL COM FILTRO SEPARADOR, MX255 E MX285
BRANDSTOFLEIDING MET SCHEIDINGSFILTER, MX255 EN MX285
BRÆNDSTOFSLANGER MED UDSKILLERFILTER, MX255 OG MX285

R	N	P.N.	MOD	Q	Description Denominacion	Descrizione Denominação	Description Beschrijving	Bezeichnung Beskrivelse	L.C.
19		327836A1		2	HOSE 1795 mm (71 in) , Cut From 291262A2				
						MANICOTTO FLESSIBILE	FLEXIBLE	SCHLAUCHMUFFE	4480
					MANGA	TUBO FLEXIVEL	FLEXIBELE BUIS	SLANGE	
21		169850C2		1	ANCHOR	ANCORAGGIO	PIECE DE FIXATION	VERANKERUNG	0120
					FIJACION	FIXADOR	ANKER	ANKER	
22		360525A1		1	HOSE Filter Drain, 700 mm (27-9/16 in)				
						MANICOTTO FLESSIBILE	FLEXIBLE	SCHLAUCH	030M
					MANGA	TUBO FLEXIVEL	FLEXIBELE BUIS	SLANGE	
23		87435416		2	SPRING Fuel Hose Guard	MOLLA	RESSORT	FEDER	100M
					RESORTE	MOLA	VEER	FJEDER	
24		L18331		2	STRAP Tie	BANDELLA	SANGLE	GURT	532B
					BANDA	BANDA	RIEM	STROP	

FUEL SEPARATOR FILTER
FILTRO SEPARATORE DEL COMBUSTIBILE
FILTRE SÉPARATEUR DE CARBURANT
KRAFTSTOFFABSCHEIDERFILTER

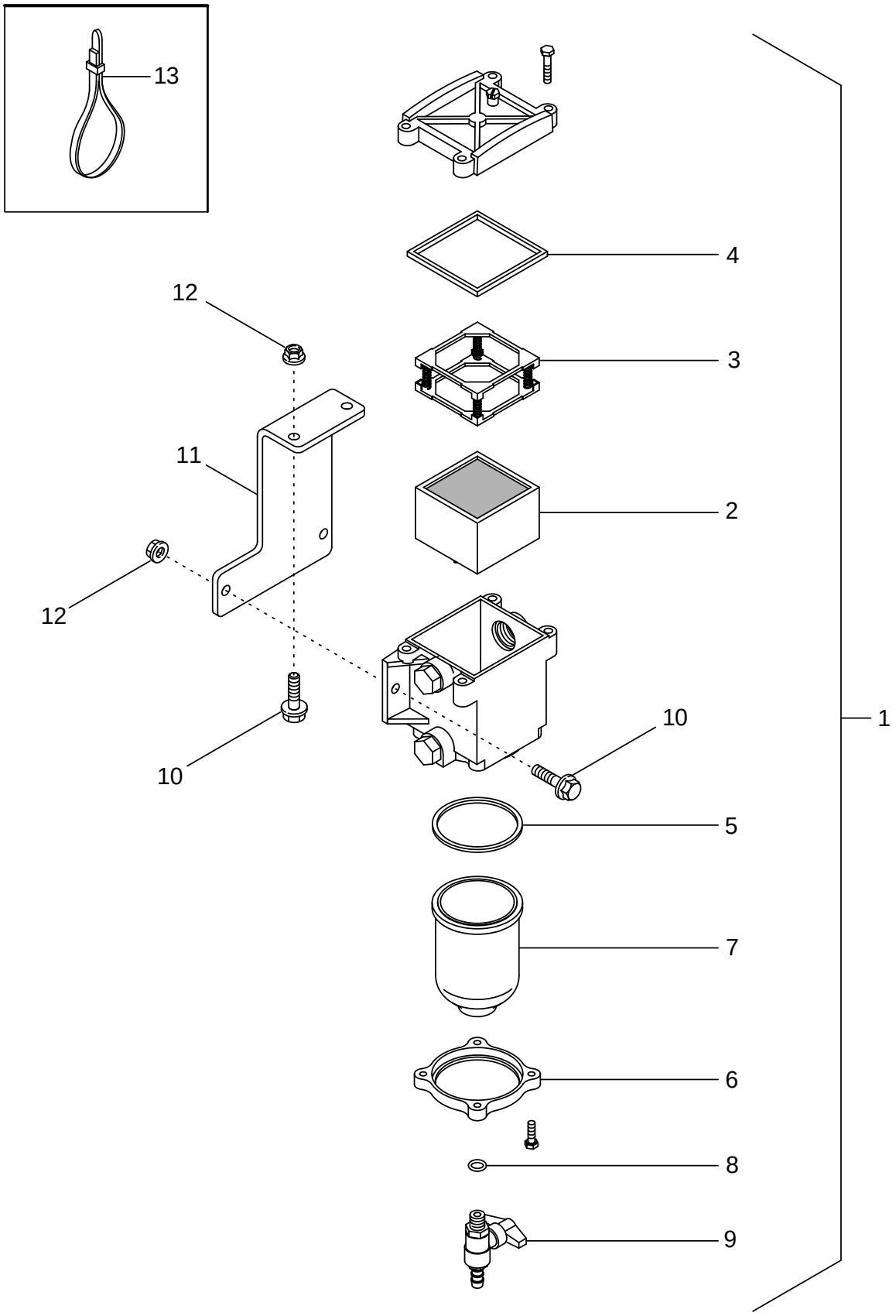

FILTRO SEPARADOR DE COMBUSTIBLE
FILTRO SEPARADOR DE COMBUSTÍVEL
BRANDSTOFSCHEIDINGSFILTER
BRÆNDSTOFUDSKILLERFILTER

R	N	P.N.	MOD	Q	Description Denominacion	Descrizione Denominação	Description Beschrijving	Bezeichnung Beskrivelse	L.C.
1		336429A2		1	FILTER, FUEL Inc. 2 - 9 FILTRO DE COMBUSTIBI	FILTRO COMBUSTIBILE FILTRO DE COMBUSTIVI	FILTRE A COMBUSTIBLE BRANDSTOFFILTER	KRAFTSTOFFILTER BRAENDSTOFFILTER	064F
2		336430A1		1	FILTER, ELEMENT ELEMENTO DE FILTRAD	ELEMENTO DEL FILTRO ELEMENTO DE FILTRO	ELÉMENT FILTRANT FILTERELEMENT	FILTERELEMENT FILTERELEMENT	2960
3		336431A1		1	FRAME BASTIDOR	TELAIO ESTRUTURA	CHASSIS RAAM	GESTELL RAMME	3620
4		336432A1		1	SEAL ANILLO DE CIERRE	ANELLO DI TENUTA ANEL DE VEDACAO	JOINT DICHTINGSRING	DICHTUNG PAKNINGSRING	7460
5		336433A1		1	SEAL ANILLO DE CIERRE	ANELLO DI TENUTA ANEL DE VEDACAO	JOINT DICHTINGSRING	DICHTUNG PAKNINGSRING	7460
6		369841A1		1	RETAINER RETENEDOR	RITEGNO RETENTOR	RETENEUR HOUDER	HALTEVORRICHTUNG HOLDER	7125
7		369842A1		1	FILTER, FUEL FILTRO DE COMBUSTIBI	FILTRO COMBUSTIBILE FILTRO DE COMBUSTIVI	FILTRE A COMBUSTIBLE BRANDSTOFFILTER	KRAFTSTOFFILTER BRÆNDSTOFFILTER	Z498
8		369843A1		1	GASKET JUNTA HERMETICA	GUARNIZIONE JUNTA	JOINT DICHTINGSSTUK	DICHTUNG, FLACH PAKNING	3720
9		369844A1		1	VALVE, DRAIN GRIFO DE VACIADO	VALVOLA, DI SCARICO VALVULA DE DRENO	SOUPAPE DE VIDANGE VALVE, DRAIN	ABLASSVENTIL AFTAPNINGSVENTIL	P700
10		844-8025		4	SCREW M8 x 25 TORNILLO	VITE PARAFUSO	VIS SCHROEF	SCHRAUBE SKRUE	7450
11		352416A2		1	SUPPORT APOYADERO	SUPPORTO SUPORTE	SUPPORT SUPPORT	STUETZE SUPPORT	8790
12		825-2408		4	NUT M8 TUERCA	DADO PORCA	ECROU MOER	MUTTER MØTRIK	5780
13		A169433		1	STRAP, SECURING CORREA DE FIJACION	CINGHIA DI FISSAGGIO CORREIA DE FIXACAO	SANGLE DE FIXATION 'BORGRIEM	SICHERUNGSRIEMEN FASTSPAENDINGSSTRC	172C

SECTION INDEX

04-01	HARNESS - ENGINE, MX210 AND MX230
04-02	HARNESS - ENGINE, MX255 AND MX285
04-03	POWER DISTRIBUTION
04-04	MODULE, ENGINE CONTROL, MX255 AND MX285
04-05	HARNESS - CHASSIS
04-06	HARNESS - REMOTE HYDRAULIC VALVE
04-07	HARNESS - CAB
04-08	HARNESS - CAB ROOF, SHELF AND CD CHANGER
04-09	HARNESS - SUSPENDED AXLE
04-10	ELECTRICAL COMPONENT MOUNTING
04-11	ELECTRICAL COMPONENT MOUNTING - FUSES
04-12	A-POST COVER - INSTRUMENT CLUSTER
04-13	CONTROLS - FRONT CONSOLE
04-14	CONTROLS - RIGHT HAND CONSOLE
04-15	CONTROLS - RIGHT FENDER CONSOLE, WITHOUT ATC
04-16	CONTROLS - RIGHT FENDER CONSOLE, WITH ATC
04-17	ALTERNATOR - MOUNTING
04-18	ALTERNATOR ASSEMBLY - 135 AMPERE
04-19	STARTER - MOUNTING
04-20	STARTER ASSEMBLY
04-21	SOLENOID - STARTER
04-22	BATTERY, BATTERY BOX AND CABLES
04-23	WINDSHIELD WIPER ASSEMBLY - FRONT AND REAR
04-24	WINDSHIELD WASHER FRONT AND REAR
04-25	HEADLAMPS
04-26	HEADLAMPS - AUXILIARY
04-27	ISO 11783 HARNESS AND MONITOR
04-28	LAMPS - FRONT POSITION AND WORK
04-29	LAMPS - CAB ROOF
04-30	LAMPS - REAR FENDER AND REMOTE HITCH SWITCH
04-31	WORK LAMPS - ROOF AND REAR FENDERS
04-32	LAMP - BEACON
04-33	RADIOS, SPEAKERS AND ANTENNAS
04-34	GROUND SPEED SENSOR
04-35	IMPLEMENT CONNECTORS AND MOUNTING

HARNESS - ENGINE, MX210 AND MX230
CABLAGGIO - MOTORE, MX210 E MX230
FAISCEAU DU MOTEUR, MX210 ET MX230
MOTOR-KABELBAUM DER SERIEN MX210 UND MX230

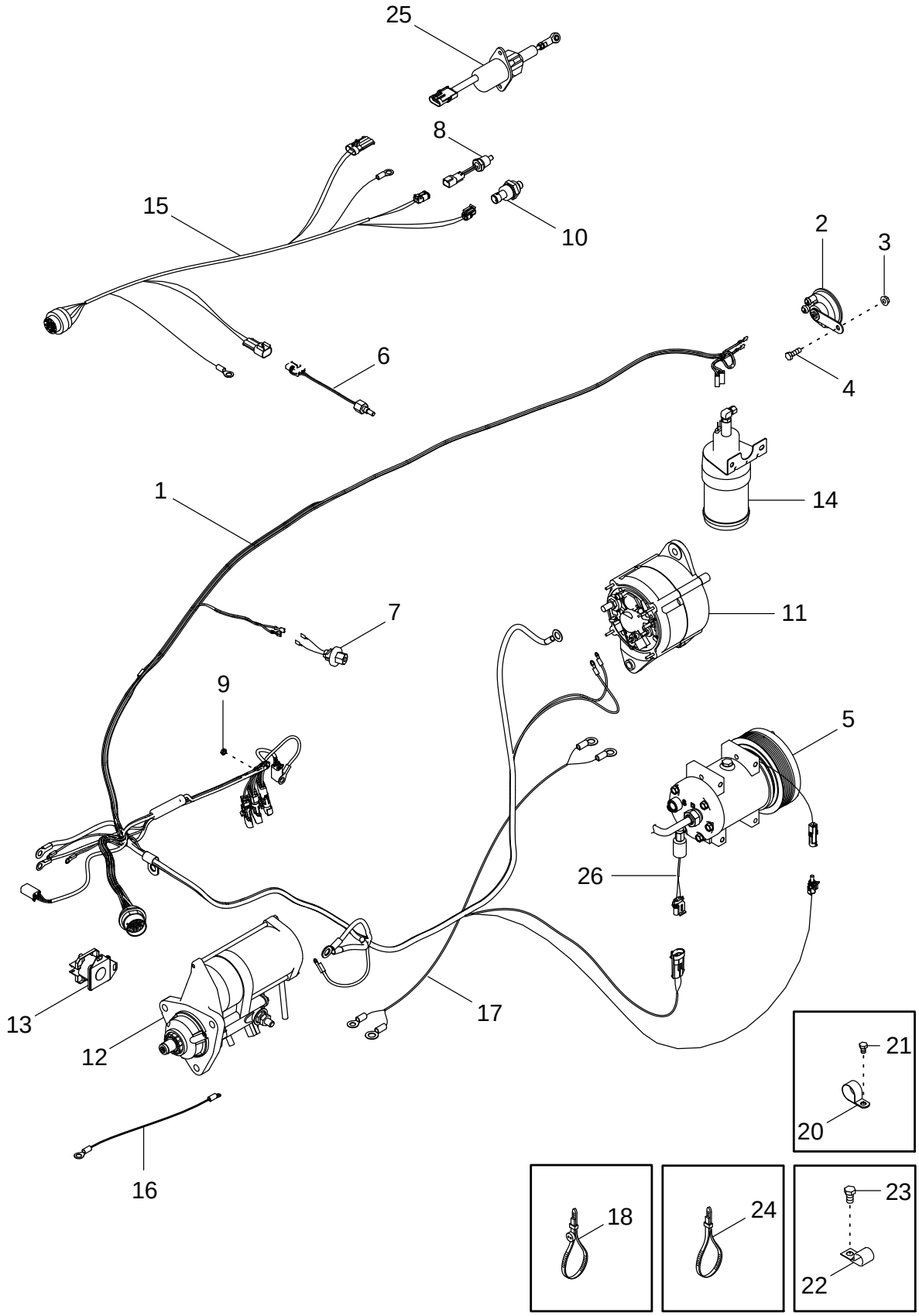

MAZO DE CABLES - MOTOR, MX210 Y MX230
CONJUNTO DE FIOS DO MOTOR, MODELOS MX210 E MX230
BEDRADING - MOTOR, MX210 EN MX230
LEDNINGSNET - MOTOR, MX210 OG MX230

R	N	P.N.	MOD	Q	Description Denominacion	Descrizione Denominação	Description Beschrijving	Bezeichnung Beskrivelse	L.C.
1		87403845		1	HARNESS Engine HAZ	CABLAGGIO CHICOTE	FAISCEAU HARNESS	KABELSTRANG HARNESS	4160
2		237582A1		1	HORN BOCINA	AVVISATORE BUZINA	AVERTISSEUR HOORN	HORN HORN	105A
3		825-5148		1	NUT M8; 8 TUERCA	DADO PORCA	ECROU MOER	MUTTER MØTRIK	5780
4		614-8025		1	SCREW M8 x 25; 8.8 TORNILLO	VITE PARAFUSO	VIS SCHROEF	SCHRAUBE SKRUE	P136
5	1	REF		1	INSTRUCTION Compressor Assy MANUAL	ISTRUZIONI INSTRUCAO	NOTICE INSTRUCTION	HINWEIS SKO, INDRE	Z571
6		194346A1		1	SENSOR Air to Air Temperature SENSOR	SENSORE SENSOR	CAPTEUR SENSOR	SENSOR FØLER	608S
7		79081900		1	SWITCH, PRESSURE Air Filter INTERRUPTOR DE PRES	INTERRUTTORE PRESSI INTERRUPTOR DE PRES	PRESSOSTAT DRUKSCHAKELAAR	DRUCKSCHALTER TRYKKONTAKT	079I
8		87403454		1	SENDOR, TEMPERATURE Coolant TERMOSONDA	TRASMETTITORE, TEMP TERMOSONDA	THERMO SONDE SENDOR, TEMPERATUR	TEMPERATURGEBER SENDER, TEMPERATUR	Z366
9		193-1000		1	NUT No. 10 NF TUERCA	DADO PORCA	ECROU MOER	MUTTER MØTRIK	5780
10		405439A1		1	PRESSURE SWITCH Oil Pressure MANOSTATO	PRESSOSTATO INTERRUPTOR DE PRES	MANOSTAT PRESSURE SWITCH	DRUCKSCHALTER PRESSURE SWITCH	Z552
11	2	REF		1	INSTRUCTION Alternator Assy MANUAL	ISTRUZIONI INSTRUCAO	NOTICE INSTRUCTION	HINWEIS SKO, INDRE	Z571
12	3	REF		1	INSTRUCTION Starter Assy MANUAL	ISTRUZIONI INSTRUCAO	NOTICE INSTRUCTION	HINWEIS SKO, INDRE	Z571
13	4	REF		1	INSTRUCTION Solenoid MANUAL	ISTRUZIONI INSTRUCAO	NOTICE INSTRUCTION	HINWEIS SKO, INDRE	Z571
14	5	REF		1	INSTRUCTION Solenoid Assy, Ether Start MANUAL	ISTRUZIONI INSTRUCAO	NOTICE INSTRUCTION	HINWEIS SKO, INDRE	Z571
15		86983668		1	HARNESS Engine Adapter HAZ	CABLAGGIO CHICOTE	FAISCEAU HARNESS	KABELSTRANG HARNESS	4160
16		86985347		1	HARNESS Solenoid to Starter HAZ	CABLAGGIO CHICOTE	FAISCEAU HARNESS	KABELSTRANG HARNESS	4160
17		86983670		1	HARNESS Alternator to Starter HAZ	CABLAGGIO CHICOTE	FAISCEAU HARNESS	KABELSTRANG HARNESS	4160

(1) See Figure 09-37
(2) See Figure 04-17
(3) See Figure 04-19
(4) See Figure 04-21
(5) See Figure 02-07

HARNESS - ENGINE, MX210 AND MX230
CABLAGGIO - MOTORE, MX210 E MX230
FAISCEAU DU MOTEUR, MX210 ET MX230
MOTOR-KABELBAUM DER SERIEN MX210 UND MX230

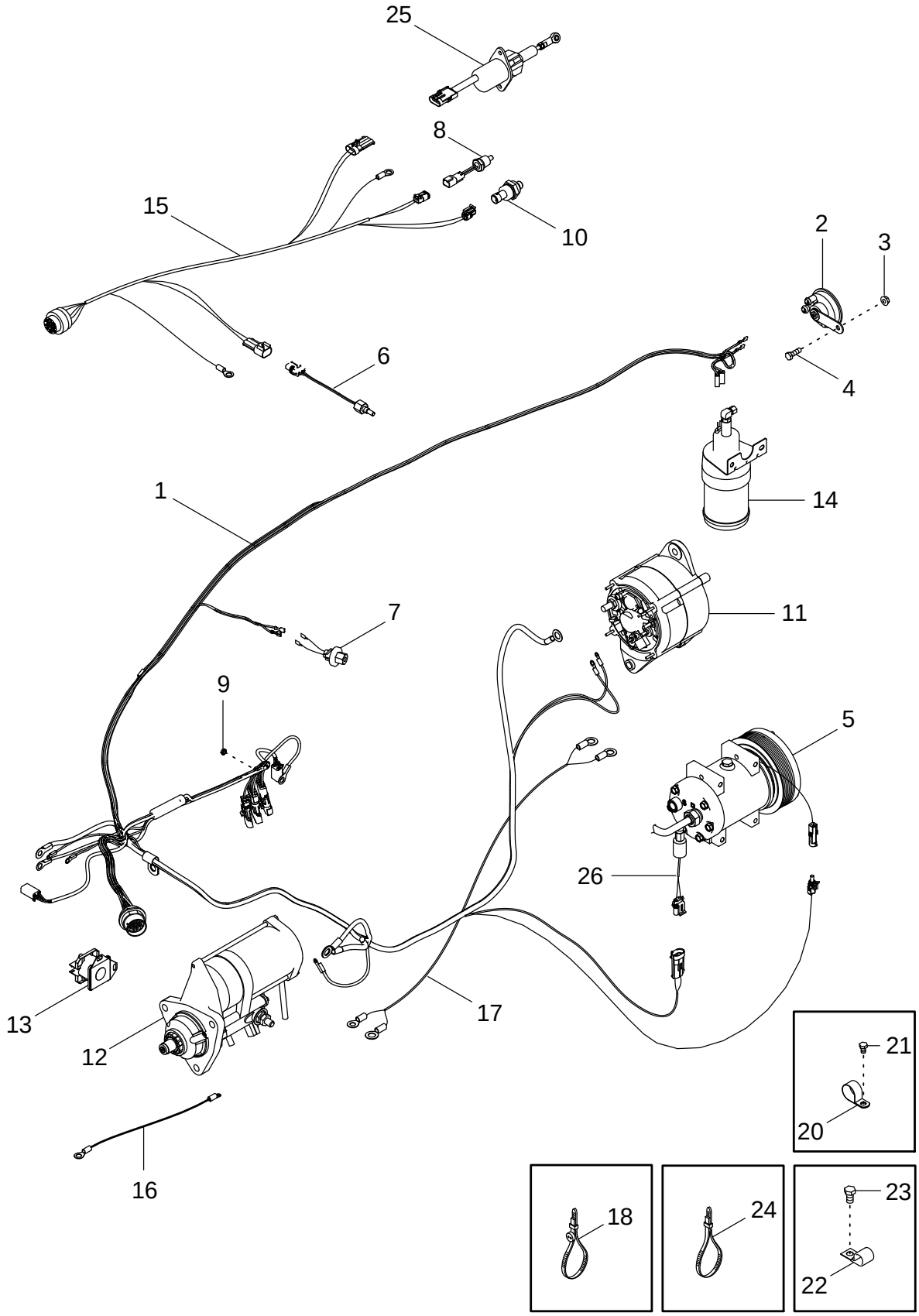

MAZO DE CABLES - MOTOR, MX210 Y MX230
CONJUNTO DE FIOS DO MOTOR, MODELOS MX210 E MX230
BEDRADING - MOTOR, MX210 EN MX230
LEDNINGSNET - MOTOR, MX210 OG MX230

R	N	P.N.	MOD	Q	Description Denominacion	Descrizione Denominação	Description Beschrijving	Bezeichnung Beskrivelse	L.C.
18		87403339		2	STRAP, CABLE CIERRA CABLES	CINGHIA, CABLAGGIO APRIETACABLES	SERRE-CABLE STRAP, CABLE	KABELBINDER SELEKABEL	P716
20		515-23317		1	CLAMP 1-1/4 ID COLLAR	MORSETTO BRACADEIRA	COLLIER CLAMP	SCHELLE CLAMP	1640
21		614-8012		1	SCREW M8 x 12; 8,8 TORNILLO	VITE PARAFUSO	VIS SCHROEF	SCHRAUBE SKRUE	P136
22		229354A1		1	CLAMP COLLAR	MORSETTO BRACADEIRA	COLLIER CLAMP	SCHELLE CLAMP	1640
23		615-12020		1	SCREW M12 x 20; 8,8 TORNILLO	VITE PARAFUSO	VIS SCHROEF	SCHRAUBE SKRUE	7450
24		L18337		4	STRAP 15 in BANDA	BANDELLA BANDA	SANGLE RIEM	GURT STROP	532B
25	1	REF		1	INSTRUCTION Solenoid, Fuel Shutoff MANUAL	ISTRUZIONI INSTRUCAO	NOTICE INSTRUCTION	HINWEIS SKO, INDRE	Z571
26		284273A2		1	SWITCH CONTACTOR	INTERRUTTORE INTERRUPTOR	CONTACTEUR SCHAKELAAR	SCHALTER KONTAKT	075I

(1) See Figure 03-07

HARNESS - ENGINE, MX255 AND MX285
CABLAGGIO - MOTORE, MX255 E MX285
FAISCEAU DU MOTEUR, MX255 ET MX285
MOTORKABELBAUM DER SERIEN MX255 UND MX285

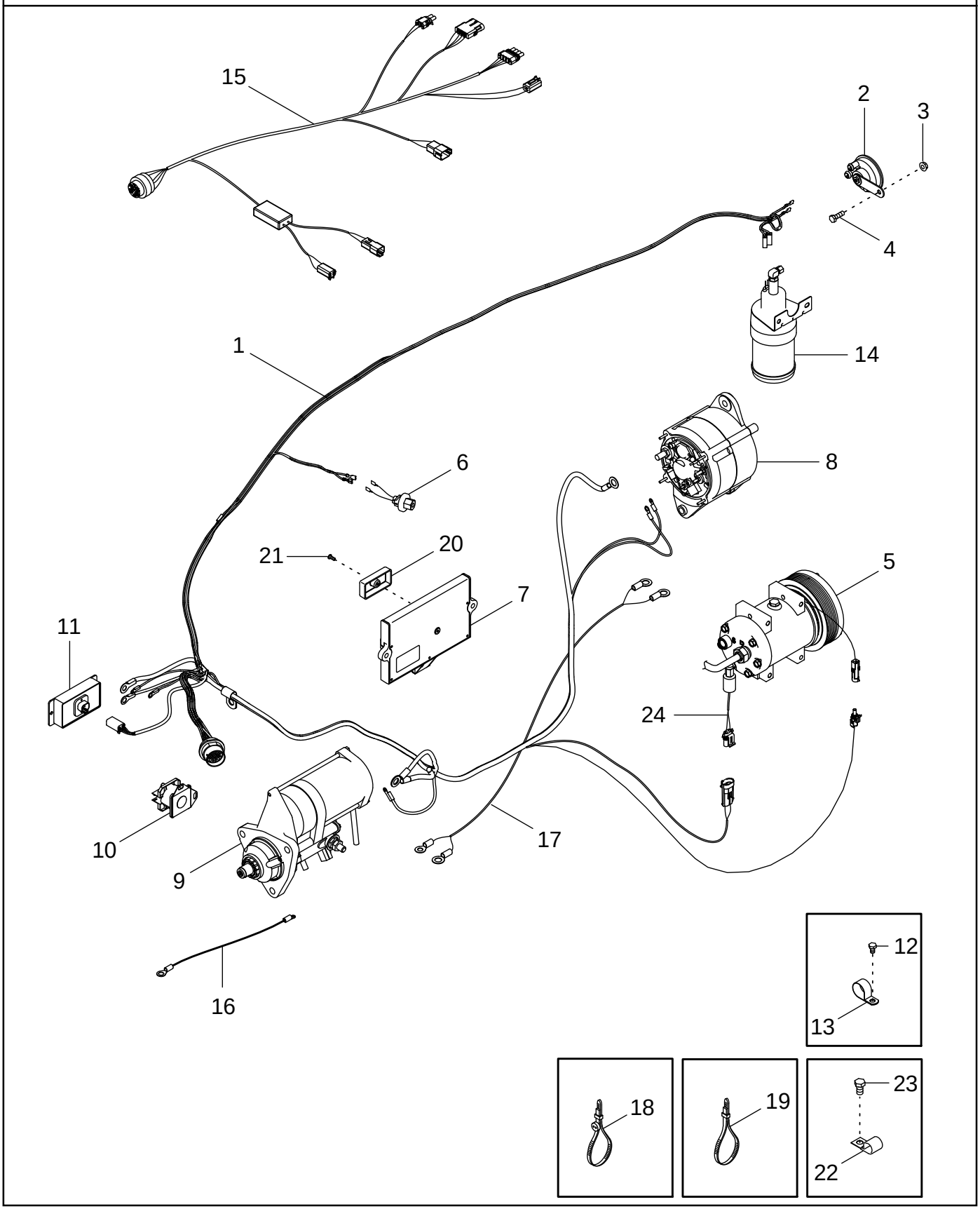

MAZO DE CABLES - MOTOR, MX255 Y MX285
CONJUNTO DE FIOS DO MOTOR, MODELOS MX255 E MX285
BEDRADING - MOTOR, MX255 EN MX285
LEDNINGSNET - MOTOR, MX255 OG MX285

R	N	P.N.	MOD	Q	Description Denominacion	Descrizione Denominação	Description Beschrijving	Bezeichnung Beskrivelse	L.C.
1		87403845		1	HARNESS Engine HAZ	CABLAGGIO CHICOTE	FAISCEAU HARNESS	KABELSTRANG HARNESS	4160
2		237582A1		1	HORN BOCINA	AVVISATORE BUZINA	AVERTISSEUR HOORN	HORN HORN	105A
3		825-5148		1	NUT M8; 8 TUERCA	DADO PORCA	ECROU MOER	MUTTER MØTRIK	5780
4		614-8025		1	SCREW M8 x 25; 8.8 TORNILLO	VITE PARAFUSO	VIS SCHROEF	SCHRAUBE SKRUE	P136
5	1	REF		1	INSTRUCTION Compressor Assy MANUAL	ISTRUZIONI INSTRUCAO	NOTICE INSTRUCTION	HINWEIS SKO, INDRE	Z571
6		79081900		1	SWITCH, PRESSURE Air Filter INTERRUPTOR DE PRES	INTERRUTTORE PRESSI INTERRUPTOR DE PRES	PRESSOSTAT DRUKSCHAKELAAR	DRUCKSCHALTER TRYKKONTAKT	079I
7	2	REF		1	INSTRUCTION Module MANUAL	ISTRUZIONI INSTRUCAO	NOTICE INSTRUCTION	HINWEIS SKO, INDRE	Z571
8	3	REF		1	INSTRUCTION Alternator Assy MANUAL	ISTRUZIONI INSTRUCAO	NOTICE INSTRUCTION	HINWEIS SKO, INDRE	Z571
9	4	REF		1	INSTRUCTION Starter Assy MANUAL	ISTRUZIONI INSTRUCAO	NOTICE INSTRUCTION	HINWEIS SKO, INDRE	Z571
10	5	REF		1	INSTRUCTION Solenoid MANUAL	ISTRUZIONI INSTRUCAO	NOTICE INSTRUCTION	HINWEIS SKO, INDRE	Z571
11	5	REF		1	INSTRUCTION Terminator MANUAL	ISTRUZIONI INSTRUCAO	NOTICE INSTRUCTION	HINWEIS SKO, INDRE	Z571
12		515-23317		1	CLAMP 1-1/4 ID COLLAR	MORSETTO BRACADEIRA	COLLIER CLAMP	SCHELLE CLAMP	1640
13		336199		1	BOLT M8 x 12; 8.8 TORNILLO	BULLONE PARAFUSO	BOULON BOUT	SCHAUBENBOLZEN SKRUE	140B
14	6	REF		1	INSTRUCTION Solenoid Assy, Ether Start MANUAL	ISTRUZIONI INSTRUCAO	NOTICE INSTRUCTION	HINWEIS SKO, INDRE	Z571
15	7	86983667	a	1	HARNESS Engine Adapter HAZ	CABLAGGIO CHICOTE	FAISCEAU HARNESS	KABELSTRANG HARNESS	4160
15	8	86983667	b	1	HARNESS Engine Adapter HAZ	CABLAGGIO CHICOTE	FAISCEAU HARNESS	KABELSTRANG HARNESS	4160
15	7	87414567	c	1	HARNESS Engine Adapter HAZ	CABLAGGIO CHICOTE	FAISCEAU HARNESS	KABELSTRANG HARNESS	4160

(1) See Figure 09-37
(2) See Figure 04-04
(3) See Figure 04-17
(4) See Figure 04-19
(5) See Figure 04-21
(6) See Figure 02-07
(7) MX255
(8) MX285
(a) BSN JAZ128063
(b) BSN JAZ128059
(c) ASN JAZ128064

HARNESS - ENGINE, MX255 AND MX285
CABLAGGIO - MOTORE, MX255 E MX285
FAISCEAU DU MOTEUR, MX255 ET MX285
MOTORKABELBAUM DER SERIEN MX255 UND MX285

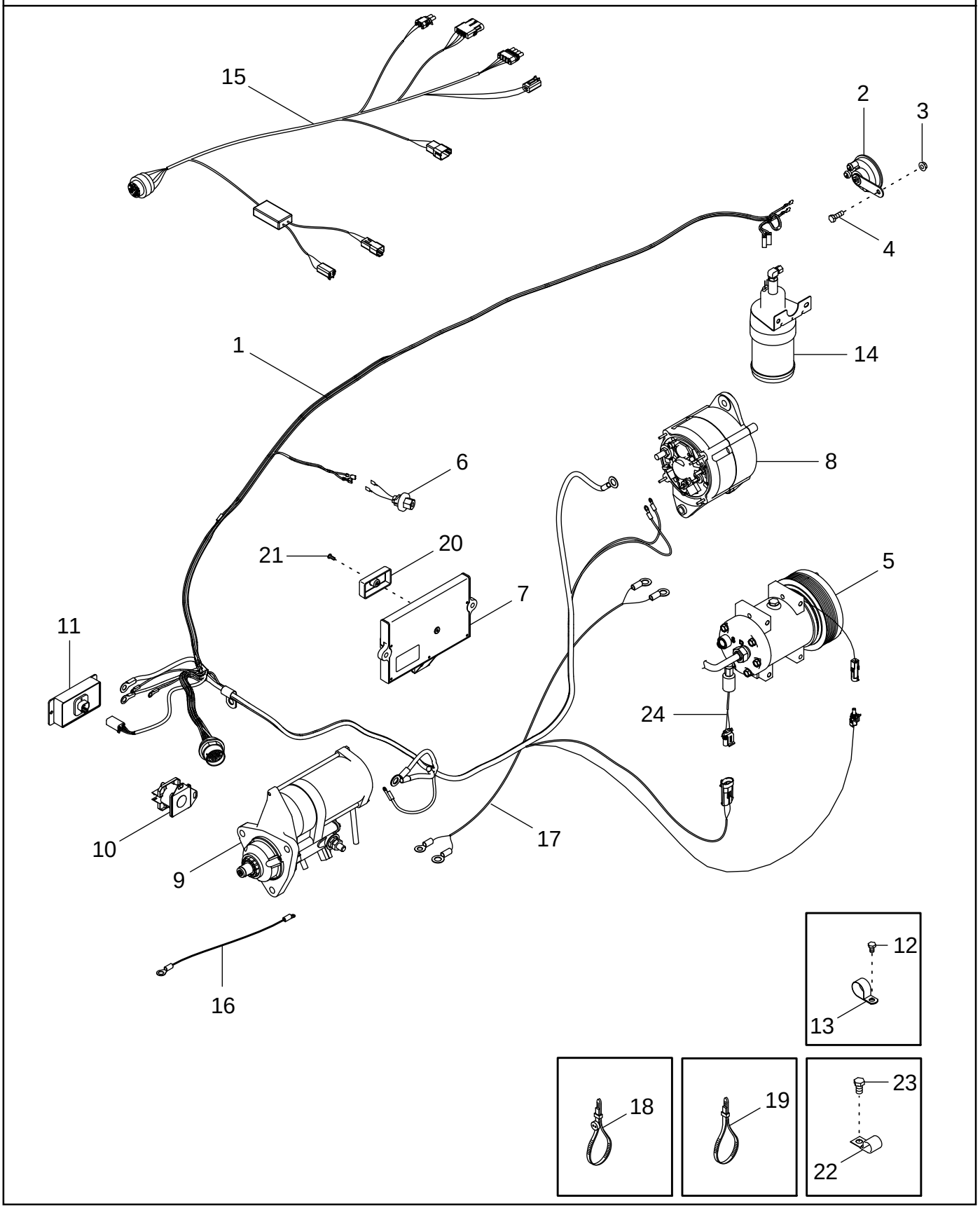

MAZO DE CABLES - MOTOR, MX255 Y MX285
CONJUNTO DE FIOS DO MOTOR, MODELOS MX255 E MX285
BEDRADING - MOTOR, MX255 EN MX285
LEDNINGSNET - MOTOR, MX255 OG MX285

R	N	P.N.	MOD	Q	Description Denominacion	Descrizione Denominação	Description Beschrijving	Bezeichnung Beskrivelse	L.C.
15	1	87414567	a	1	HARNESS Engine Adapter HAZ	CABLAGGIO CHICOTE	FAISCEAU HARNESS	KABELSTRANG HARNESS	4160
16		86985347		1	HARNESS Solenoid to Starter HAZ	CABLAGGIO CHICOTE	FAISCEAU HARNESS	KABELSTRANG HARNESS	4160
17		86983670		1	HARNESS Alternator to Starter HAZ	CABLAGGIO CHICOTE	FAISCEAU HARNESS	KABELSTRANG HARNESS	4160
18		87403339		2	STRAP, CABLE CIERRA CABLES	CINGHIA, CABLAGGIO APRIETACABLES	SERRE-CABLE STRAP, CABLE	KABELBINDER SELEKABEL	P716
19		L18337		4	STRAP 15 in BANDA	BANDELLA BANDA	SANGLE RIEM	GURT STROP	532B
20		279267A1		1	PLUG TAPÓN	TAPPO BUJÃO	BOUCHON PLUG	STOPFEN PROP	050T
21		490-1108		1	SCREW No. 10 x 1/2 TORNILLO	VITE PARAFUSO	VIS SCHROEF	SCHRAUBE SKRUE	7450
22		229354A1		1	CLAMP COLLAR	MORSETTO BRACADEIRA	COLLIER CLAMP	SCHELLE CLAMP	1640
23		615-12020		1	SCREW M12 x 20; 8,8 TORNILLO	VITE PARAFUSO	VIS SCHROEF	SCHRAUBE SKRUE	7450
24		284273A2		1	SWITCH CONTACTOR	INTERRUTTORE INTERRUPTOR	CONTACTEUR SCHAKELAAR	SCHALTER KONTAKT	075I

(1) MX285
(a) ASN JAZ128060

POWER DISTRIBUTION
DISTRIBUZIONE DELLA POTENZA
DISTRIBUTION DE L'ALIMENTATION
LEISTUNGSVERTEILUNG

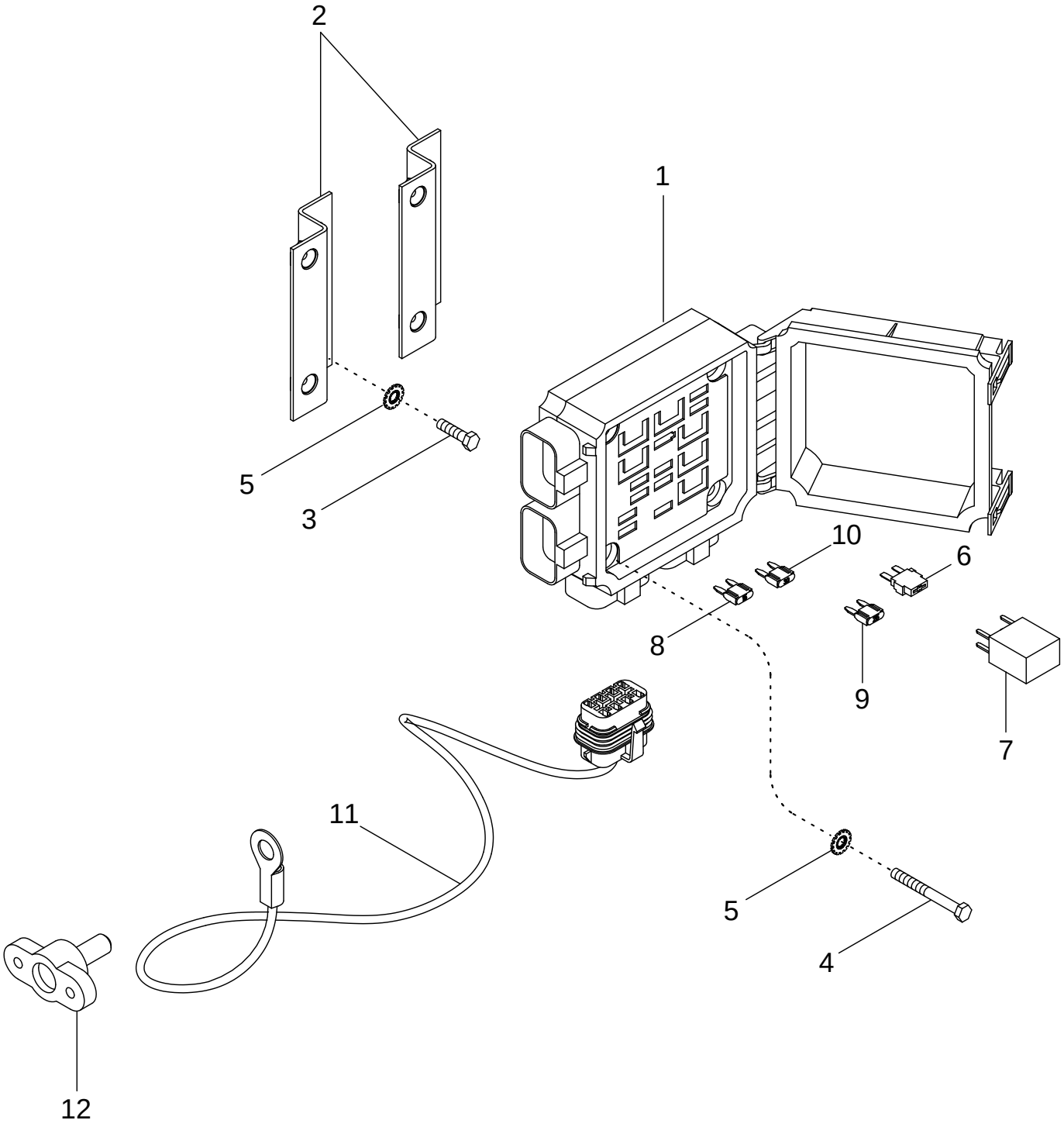

DISTRIBUCIÓN DE ALIMENTACIÓN
DISTRIBUIÇÃO DE POTÊNCIA
STROOMVERDELING
STRØMFORDELING

R	N	P.N.	MOD	Q	Description Denominacion	Descrizione Denominação	Description Beschrijving	Bezeichnung Beskrivelse	L.C.
1		441480A2		1	BOX, FUSE Engine CAJA,FUSIBLE	SCATOLA, FUSIBILE CAIXA DE FUSIVEL	BOITE A FUSIBLES BOX, FUSE	SICHERUNGSDOSE BOX, FUSE	P823
2		87410072		2	BRACKET Fuse Box PIEZA DE SOPORTE	STAFFA BRACADEIRA	PATTE FIXATION STEUNBEUGEL	HALTERUNG BESLAG	225S
3		463-11012		4	SCREW No. 10 x 3/4 TORNILLO	VITE PARAFUSO	VIS SCHROEF	SCHRAUBE SKRUE	7450
4		363-11028		4	BOLT, MACHINE No. 10 x 1-3/4 PERNO, MAQUINA	BULLONE, QUADRATO PARAFUSO	BOULON TETE CARREE BOLT, MACHINE	MASCHINESCHRAUBE BOLT, MACHINE	P124
5		493-11020		8	WASHER, LOCK No. 10 ARANDELA FRENO	RONDELLA, DI BLOCC ARRUELA DE PRESSAO	RONDELLE GROWER WASHER, LOCK	FEDERRING WASHER, LOCK	P403
6		416569A1		1	DIODE-ELEMENT SOPORTE DE DIODO	ELEMENTO DEL DIODO DIODE-ELEMENT	SUPPORT-DE-DIODES DIODE-ELEMENT	DIODENELEMENT DIODE-ELEMENT	Z628
7	1, 2	416570A1		5	RELAY CONECTADOR	RELE' CONECTADOR	RELAIS RELAIS	RELAIS RELAE	011R
7	3, 4	416570A1		4	RELAY CONECTADOR	RELE' CONECTADOR	RELAIS RELAIS	RELAIS RELAE	011R
8		121413A1		AR	FUSE 15 Amp FUSIBLE	FUSIBILE FUSIVEL	FUSIBLE ZEKERING	SICHERUNG SIKRING	110F
9		121415A1		AR	FUSE 25 Amp FUSIBLE	FUSIBILE FUSIVEL	FUSIBLE ZEKERING	SICHERUNG SIKRING	110F
10		121416A1		AR	FUSE 30 Amp FUSIBLE	FUSIBILE FUSIVEL	FUSIBLE ZEKERING	SICHERUNG SIKRING	110F
11		441479A2		1	HARNESS Tractor Auxiliary Power HAZ	CABLAGGIO CHICOTE	FAISCEAU HARNESS	KABELSTRANG HARNESS	4160
12		441483A1		1	CONNECTOR, TERMINAL Auxiliary Power TERMINAL	CONNETTORE TERMINAL CONECTOR	BORNE CONNECTOR, TERMINA	TERMINALVERBINDUNG CONNECTOR, TERMINA	Z313

(1) MX210
(2) MX230
(3) MX255
(4) MX285

MODULE, ENGINE CONTROL, MX255 AND MX285
CENTRALINA ELETTRONICA, MX255 E MX285
CONTRÔLEUR DU MOTEUR, MX255 ET MX285
MOTOR-STEUERMODUL DER SERIEN MX255 UND MX285

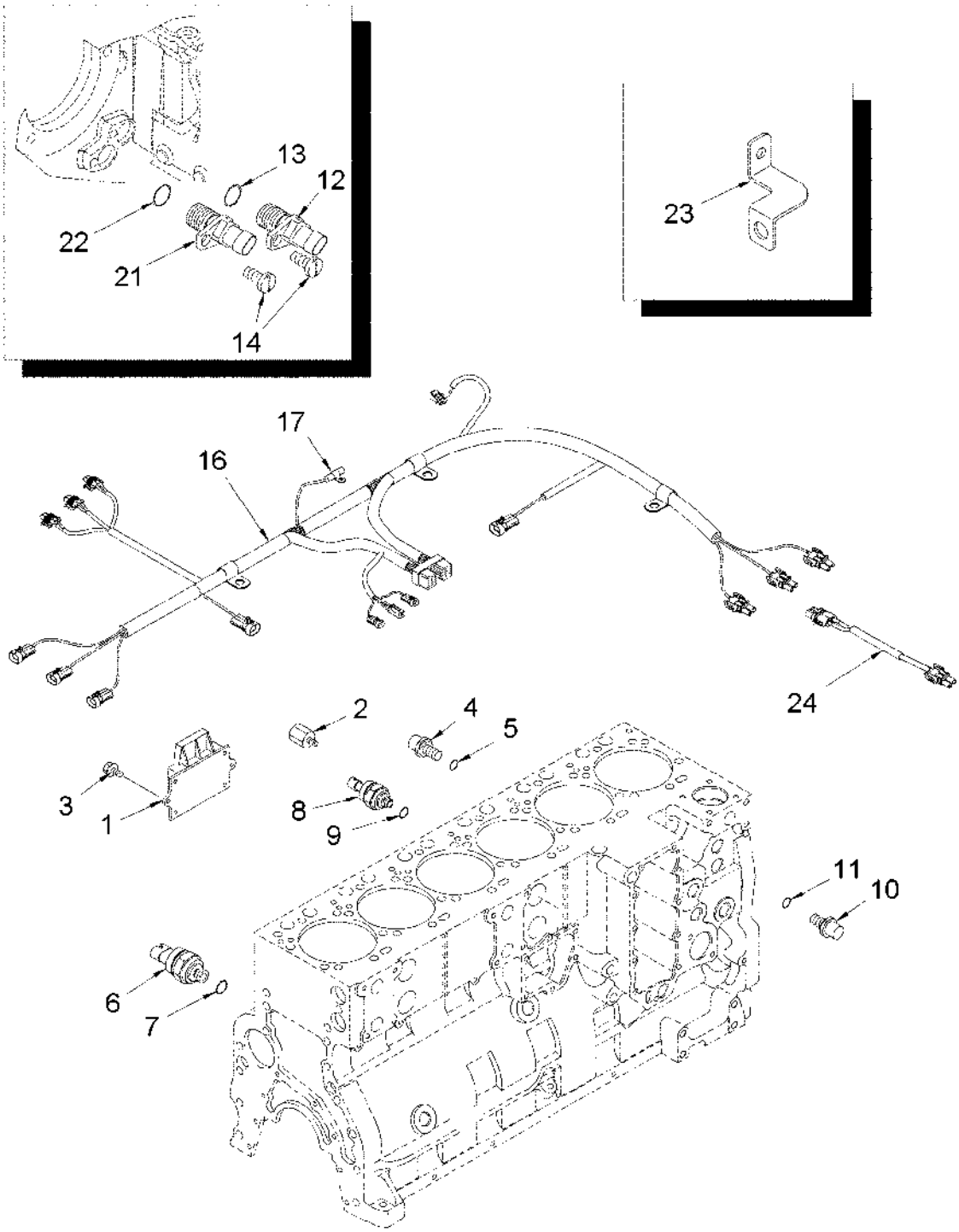

MÓDULO, CONTROL DEL MOTOR, MX255 Y MX285
MÓDULO DE CONTROLO DO MOTOR, MODELOS MX255 E MX285
MODULE, REGELSYSTEEM MOTOR, MX255 EN MX285
MODUL, MOTORSTYRING, MX255 OG MX285

R	N	P.N.	MOD	Q	Description Denominacion	Descrizione Denominação	Description Beschrijving	Bezeichnung Beskrivelse	L.C.
1		J944125		1	ELECTRONIC UNIT, CONTROL New				
						CENTRALINA ELETTRON	BOITIER ELECTRONIQUI	ELEKTRONIKBOX	655C
					CAJA ELECTRONICA	UNID.CONTROLE ELECT	ELECTRONISCHE KAST	ELEKTRONIKBOKS	
2		J936236		2	SPACER	DISTANZIALE	ENTRETOISE	DISTANZSTÜCK	075D
					SEPARADOR	ESPACADOR	AFSTANDSRING	AFSTANDSSTYKKE	
3		845-8020		3	SCREW M8 x 20; 8.8	VITE	VIS	SCHRAUBE	7450
					TORNILLO	PARAFUSO	SCHROEF	SKRUE	
4		J348747		1	SENSOR Pressure, Inc. 5	SENSORE	CAPTEUR	SENSOR	608S
					SENSOR	SENSOR	SENSOR	FØLER	
5		J330202		1	O-RING 11,3 ID x 2,2 mm	ANELLO TOROIDALE	JOINT THORIQUE	DICHTRING	055A
					JUNTA HERMETICA	O-RING	O-RING	O-RING	
6		87400188		1	SENSOR Pressure, Inc. 7	SENSORE	CAPTEUR	SENSOR	608S
					SENSOR	SENSOR	SENSOR	FØLER	
7		J330202		1	O-RING 11,3 ID x 2,2 mm	ANELLO TOROIDALE	JOINT THORIQUE	DICHTRING	055A
					JUNTA HERMETICA	O-RING	O-RING	O-RING	
8		J408345		1	SENSOR Temperature, Inc. 9				
						SENSORE	CAPTEUR	SENSOR	608S
					SENSOR	SENSOR	SENSOR	FØLER	
9		J678912		1	O-RING 11,3 ID x 2,2 mm	ANELLO TOROIDALE	JOINT THORIQUE	DICHTRING	055A
					JUNTA HERMETICA	O-RING	O-RING	O-RING	
10		J865346		1	SENSOR Inc. 11	SENSORE	CAPTEUR	SENSOR	608S
					SENSOR	SENSOR	SENSOR	FØLER	
11		J678912		1	O-RING 11,3 ID x 2,2 mm	ANELLO TOROIDALE	JOINT THORIQUE	DICHTRING	055A
					JUNTA HERMETICA	O-RING	O-RING	O-RING	
12		J4002064		1	SENSOR Position, Inc. 13	SENSORE	CAPTEUR	SENSOR	608S
					SENSOR	SENSOR	SENSOR	FØLER	
13		J330478		1	O-RING	ANELLO TOROIDALE	JOINT THORIQUE	DICHTRING	055A
					JUNTA HERMETICA	O-RING	O-RING	O-RING	
14		844-6016		2	SCREW M6 x 16; 8.8	VITE	VIS	SCHRAUBE	P136
					TORNILLO	PARAFUSO	SCHROEF	SKRUE	
16		87404234		1	HARNESS, WIRE Inc. 17	INSIEME CAVI	FAISCEAU COMPLET	KABELSTRANG KPLT	070I
					GRUPO DE CABLES	CABLAGEM	KABELBOOM	KABELNET	
16	1	87404234	a	1	HARNESS, WIRE Inc. 17	INSIEME CAVI	FAISCEAU COMPLET	KABELSTRANG KPLT	070I
					GRUPO DE CABLES	CABLAGEM	KABELBOOM	KABELNET	
16	2	87404234	b	1	HARNESS, WIRE Inc. 17	INSIEME CAVI	FAISCEAU COMPLET	KABELSTRANG KPLT	070I
					GRUPO DE CABLES	CABLAGEM	KABELBOOM	KABELNET	
16	1	87416065	c	1	HARNESS, WIRE Inc. 17, 24				
						INSIEME CAVI	FAISCEAU COMPLET	KABELSTRANG KPLT	070I
					GRUPO DE CABLES	CABLAGEM	KABELBOOM	KABELNET	
16	2	87416065	d	1	HARNESS, WIRE Inc. 17, 24				
						INSIEME CAVI	FAISCEAU COMPLET	KABELSTRANG KPLT	070I
					GRUPO DE CABLES	CABLAGEM	KABELBOOM	KABELNET	

(1) MX255
(2) MX285
(a) BSN JAZ128063
(b) BSN JAZ128059
(c) ASN JAZ128064
(d) ASN JAZ128060

MODULE, ENGINE CONTROL, MX255 AND MX285
CENTRALINA ELETTRONICA, MX255 E MX285
CONTRÔLEUR DU MOTEUR, MX255 ET MX285
MOTOR-STEUERMODUL DER SERIEN MX255 UND MX285

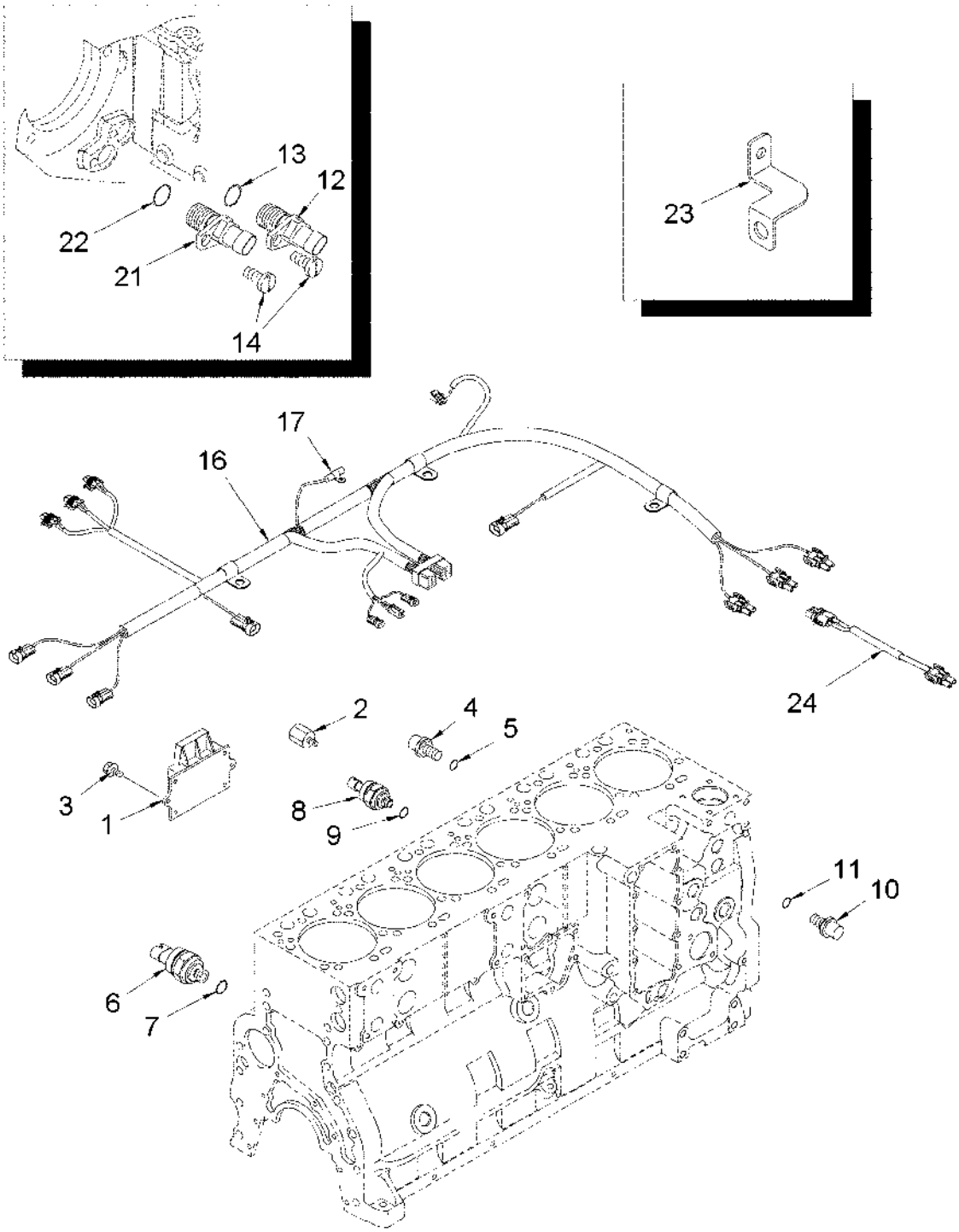

MÓDULO, CONTROL DEL MOTOR, MX255 Y MX285
MÓDULO DE CONTROLO DO MOTOR, MODELOS MX255 E MX285
MODULE, REGELSYSTEEM MOTOR, MX255 EN MX285
MODUL, MOTORSTYRING, MX255 OG MX285

R	N	P.N.	MOD	Q	Description Denominacion	Descrizione Denominação	Description Beschrijving	Bezeichnung Beskrivelse	L.C.
17		J944110		1	SUPPRESSOR Used With 18, 19, 20				
						DISPOSITIVO ANTIDIST	ANTIPARASITE	ENTSTÖRER	8810
					SUPRESOR	SUPRESSOR	SUPPRESSOR	UNDERTRYKKER	
18		313490A1		6	BOLT M10 x 14, Not Illustrated				
						BULLONE	BOULON	SCHAUBENBOLZEN	140B
					TORNILLO	PARAFUSO	BOUT	SKRUE	
19		825-2408		1	NUT M8, Not Illustrated	DADO	ECROU	MUTTER	5780
					TUERCA	PORCA	MOER	MØTRIK	
20		825-2406		1	NUT M6, Not Illustrated	DADO	ECROU	MUTTER	5780
					TUERCA	PORCA	MOER	MØTRIK	
21		87400183		1	SENSOR Inc. 22	SENSORE	CAPTEUR	SENSOR	608S
					SENSOR	SENSOR	SENSOR	FØLER	
22		87400235		1	O-RING	ANELLO TOROIDALE	JOINT THORIQUE	DICHTRING	055A
					JUNTA HERMETICA	O-RING	O-RING	O-RING	
23	1	87414641	a	1	BRACKET Mounting, Engine Harness				
						STAFFA	PATTE FIXATION	HALTERUNG	225S
					PIEZA DE SOPORTE	BRACADEIRA	STEUNBEUGEL	BESLAG	
23	2	87414641	b	1	BRACKET Mounting, Engine Harness				
						STAFFA	PATTE FIXATION	HALTERUNG	225S
					PIEZA DE SOPORTE	BRACADEIRA	STEUNBEUGEL	BESLAG	
24	1	87428093	a	1	HARNESS, WIRE Coolant	INSIEME CAVI	FAISCEAU COMPLET	KABELSTRANG KPLT	070I
					GRUPO DE CABLES	CABLAGEM	KABELBOOM	KABELNET	
24	2	87428093	b	1	HARNESS, WIRE Coolant	INSIEME CAVI	FAISCEAU COMPLET	KABELSTRANG KPLT	070I
					GRUPO DE CABLES	CABLAGEM	KABELBOOM	KABELNET	

(1) MX255
(2) MX285
(a) ASN JAZ128064
(b) ASN JAZ128060

04-05		p1	07/04

HARNESS - CHASSIS
CABLAGGIO - TELAIO
FAISCEAU DU CHÂSSIS
RAHMENKABELBAUM

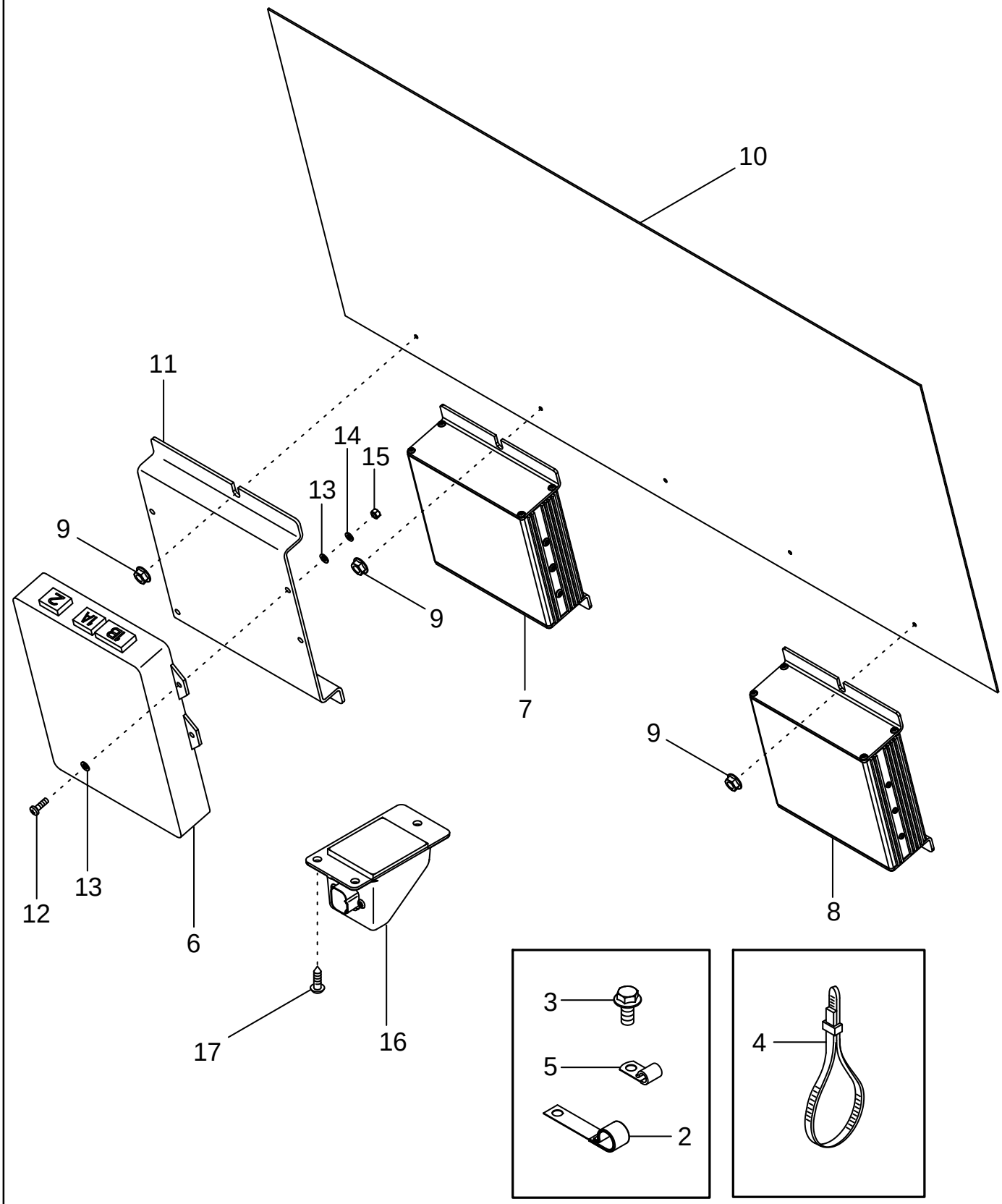

MAZO DE CABLES - CHASIS
CONJUNTO DE FIOS - CHASSI
BEDRADING - CHASSIS
LEDNINGSNET - CHASSIS

R	N	P.N.	MOD	Q	Description Denominacion	Descrizione Denominação	Description Beschrijving	Bezeichnung Beskrivelse	L.C.
1		87406275	a	1	HARNESS Chassis, Not Shown				
						CABLAGGIO	FAISCEAU	KABELSTRANG	4160
					HAZ	CHICOTE	HARNESS	HARNESS	
1		87413894	b	1	HARNESS Chassis, Not Shown				
						CABLAGGIO	FAISCEAU	KABELSTRANG	4160
					HAZ	CHICOTE	HARNESS	HARNESS	
1		87441878	c	1	HARNESS Chassis, Not Shown				
						CABLAGGIO	FAISCEAU	KABELSTRANG	4160
					HAZ	CHICOTE	HARNESS	HARNESS	
2		133738A1		2	CLIP	FERMAGLIO	CLIP	KLAMMER	045F
					SUJETADOR	FIXADOR	KLEM	KLIPS	
3		844-12025		1	SCREW M12 x 25; 8.8	VITE	VIS	SCHRAUBE	7450
					TORNILLO	PARAFUSO	SCHROEF	SKRUE	
4		L11541		2	STRAP	BANDELLA	SANGLE	GURT	532B
					BANDA	BANDA	RIEM	STROP	
5		516-2395		2	CLAMP 3/8 ID	MORSETTO	COLLIER	SCHELLE	1640
					COLLAR	BRACADEIRA	CLAMP	CLAMP	
6	1	86985266		1	CONTROL UNIT Transmission				
						GRUPPO DI REGOLAZIO	GROUPE REGULATEUR	STEUEREINHEIT	111G
					GRUPO REGULADOR	UNIDADE REGULADORA	BEDIENINGSEENHEID	REGULERINGSENHED	
7	1	407118A2		1	CONTROL UNIT Hitch	GRUPPO DI REGOLAZIO	GROUPE REGULATEUR	STEUEREINHEIT	111G
					GRUPO REGULADOR	UNIDADE REGULADORA	BEDIENINGSEENHEID	REGULERINGSENHED	
8	1	411976A1		1	CONTROL UNIT PTO/MFD/Differential Lock				
						GRUPPO DI REGOLAZIO	GROUPE REGULATEUR	STEUEREINHEIT	111G
					GRUPO REGULADOR	UNIDADE REGULADORA	BEDIENINGSEENHEID	REGULERINGSENHED	
9		825-2408		3	NUT M8	DADO	ECROU	MUTTER	5780
					TUERCA	PORCA	MOER	MØTRIK	
10		378802A1		1	COVER	COPERCHIO	COUVERCLE	DECKEL	265C
					TAPADERA	COBERTA	DEKSEL	DÆKSEL	
11		446176A1		1	PLATE	PIASTRA	PLAQUE	PLATTE	105P
					PLACA	CHAPA	PLAAT	PLADE	
12		840-1516		4	SCREW M5 x 16	VITE	VIS	SCHRAUBE	7450
					TORNILLO	PARAFUSO	SCHROEF	SKRUE	
13		895-11005		8	WASHER 5,5 x 10 x 1 mm	ROSETTA PIANA	RONDELLE	SCHEIBE	9720
					ARANDELA	ANILHA	SLUITRING	FLADSKIVE	
14		892-11005		4	WASHER, LOCK M5	ROSETTA DI SICUREZZA	RONDELLE FREIN	SPRENGRING	132R
					ARANDELA DE FRENO	ANILHA DE FIXACAO	VEERRING	LAASESKIVE	
15		824-1405		4	NUT M5	DADO	ECROU	MUTTER	5780
					TUERCA	PORCA	MOER	MØTRIK	
16		397496A1		1	CONNECTOR	CONNESSIONE	CONNECTEUR	STECKVERBINDUNG ELI	235C
					CONECTOR	CONECTOR	VERBINDING	STIK	
17		780-34319		3	SCREW M4,8 x 19	VITE	VIS	SCHRAUBE	7450
					TORNILLO	PARAFUSO	SCHROEF	SKRUE	

(1) Without Software
(a) BSN JAZ128365
(b) BTW JAZ128365 & AJB0305690
(c) ASN AJB0305690

04-05		p2	07/04

HARNESS - CHASSIS
CABLAGGIO - TELAIO
FAISCEAU DU CHÂSSIS
RAHMENKABELBAUM

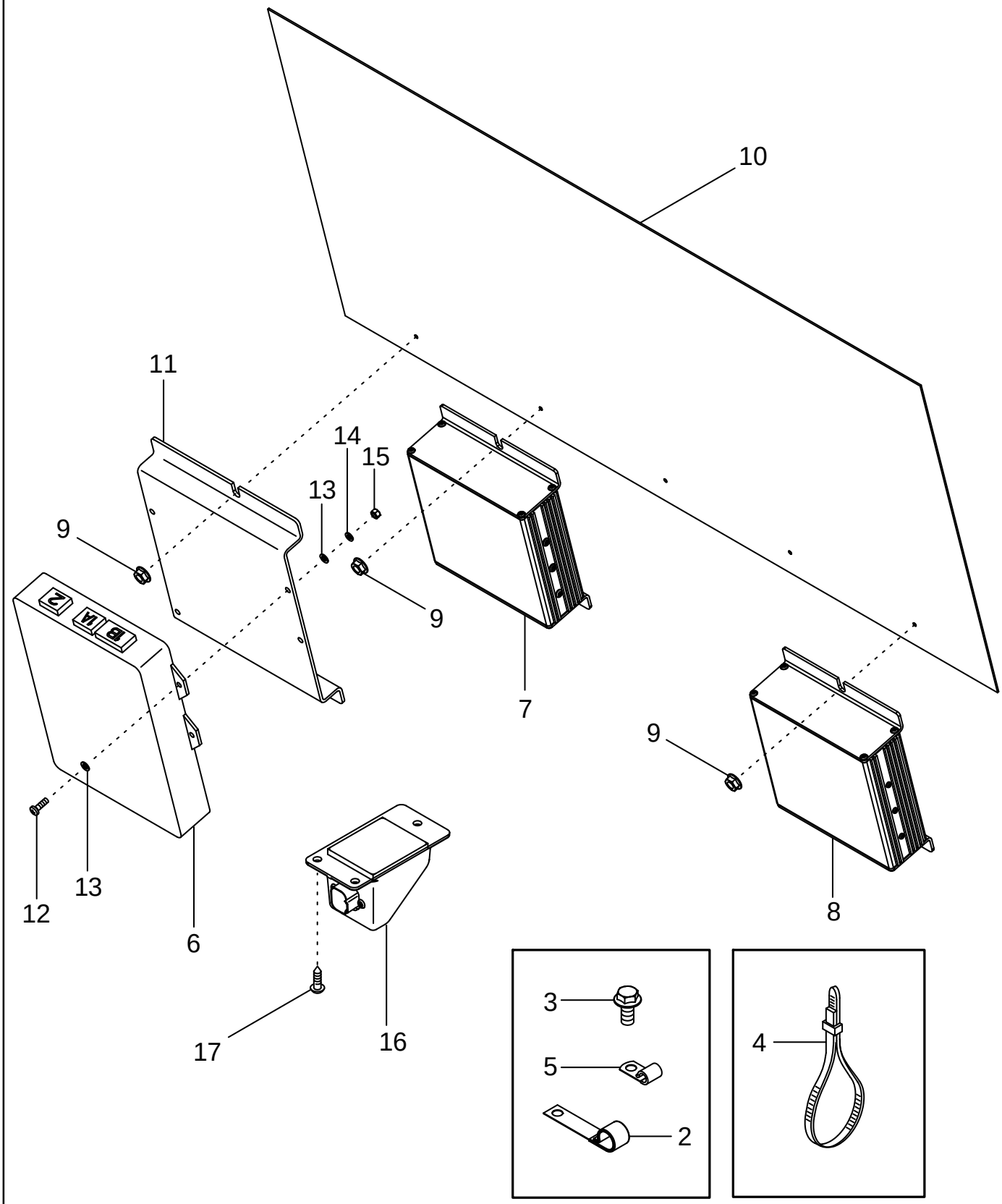

MAZO DE CABLES - CHASIS
CONJUNTO DE FIOS - CHASSI
BEDRADING - CHASSIS
LEDNINGSNET - CHASSIS

R	N	P.N.	MOD	Q	Description Denominacion	Descrizione Denominação	Description Beschrijving	Bezeichnung Beskrivelse	L.C.
18		86988136		1	HARNESS Park Brake Extension, Not Shown				
						CABLAGGIO	FAISCEAU	KABELSTRANG	4160
					HAZ	CHICOTE	HARNESS	HARNESS	
19	1	397240A1		1	SENDOR, TEMPERATURE Transmission (Not Shown)				
						TRASMETTITORE, TEMP	THERMO SONDE	TEMPERATURGEBER	Z366
					TERMOSONDA	TERMOSONDA	SENDOR, TEMPERATUR	SENDER, TEMPERATUR	
20		366867A2		1	HARNESS Dual Speed PTO Sensor (Not Illustrated)				
						CABLAGGIO	FAISCEAU	KABELSTRANG	4160
					HAZ	CHICOTE	HARNESS	HARNESS	
21	2	A186004		1	SENSOR Dual Speed PTO (Not Illustrated)				
						SENSORE	CAPTEUR	SENSOR	608S
					SENSOR	SENSOR	SENSOR	FØLER	
22		169850C2		2	ANCHOR Harness (Not Illustrated)				
						ANCORAGGIO	PIECE DE FIXATION	VERANKERUNG	0120
					FIJACION	FIXADOR	ANKER	ANKER	
23		515-2195		1	CLAMP 3/8 ID (Not Illustrated)				
						MORSETTO	COLLIER	SCHELLE	1640
					COLLAR	BRACADEIRA	CLAMP	CLAMP	
24		614-6012		1	SCREW M6 x 12; 8.8 (Not Illustrated)				
						VITE	VIS	SCHRAUBE	7450
					TORNILLO	PARAFUSO	SCHROEF	SKRUE	
25		829-1406		1	NUT M6 (Not Illustrated)	DADO	ECROU	MUTTER	010D
					TUERCA	PORCA	MOER	MØTRIK	

(1) See Figure 07-08
(2) See Figure 06-41

HARNESS - REMOTE HYDRAULIC VALVE
CABLAGGIO - VALVOLA IDRAULICA AUSILIARIA
FAISCEAU DU DISTRIBUTEUR DE COMMANDE À DISTANCE
KABELBAUM - HYDRAULIKVENTIL

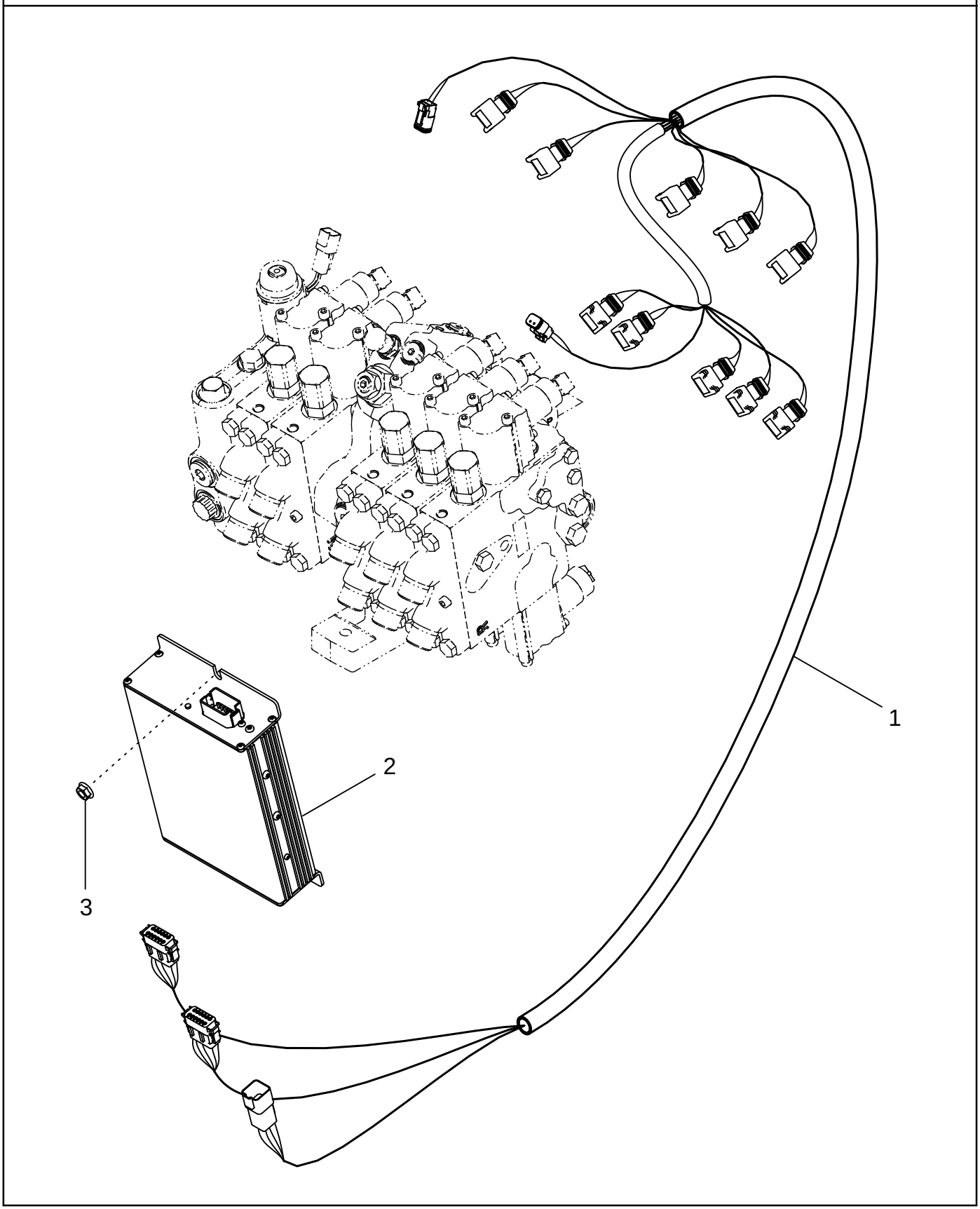

MAZO DE CABLES - VÁLVULA HIDRÁULICA REMOTA
CONJUNTO DE FIOS - VÁLVULA HIDRÁULICA REMOTA
BEDRADING - EXTERNE HYDRAULISCHE KLEP
LEDNINGSNET - HYDRAULISK FJERNVENTIL

R	N	P.N.	MOD	Q	Description Denominacion	Descrizione Denominação	Description Beschrijving	Bezeichnung Beskrivelse	L.C.
1		87406276		1	HARNESS Remote Valve HAZ	CABLAGGIO CHICOTE	FAISCEAU HARNESS	KABELSTRANG HARNESS	4160
2		313776A4		1	CONTROL UNIT Remote Valve GRUPO REGULADOR	GRUPPO DI REGOLAZIO UNIDADE REGULADORA	GROUPE REGULATEUR BEDIENINGSEENHEID	STEUEREINHEIT REGULERINGSENHED	111G
3		825-2408		1	NUT M8 TUERCA	DADO PORCA	ECROU MOER	MUTTER MØTRIK	5780

MX210 MX230
MX255 MX285

04-07		p1	07/04

HARNESS - CAB
CABLAGGIO - CABINA
FAISCEAU DE LA CABINE
KABINENKABELBAUM

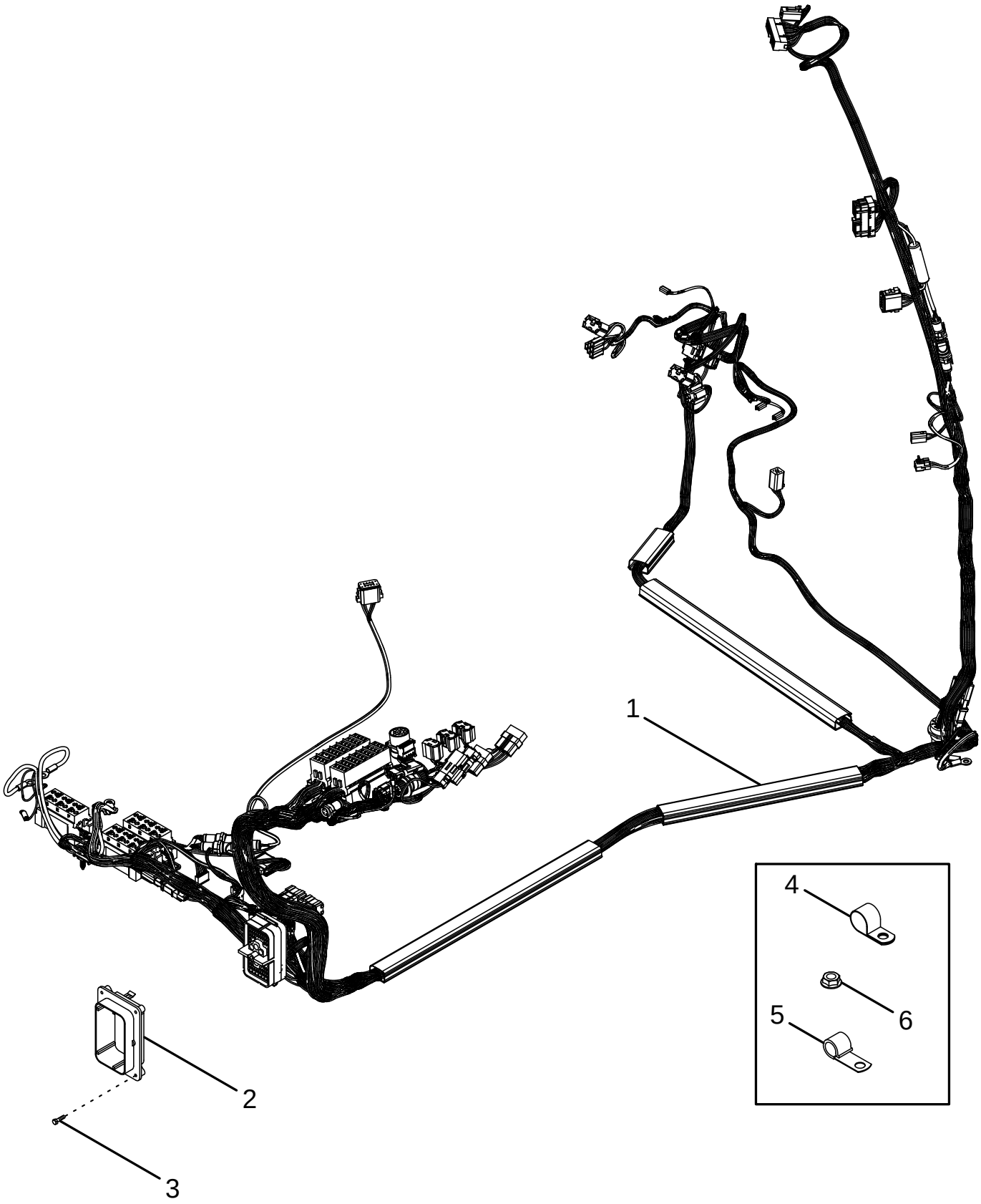

MAZO DE CABLES - CABINA
CONJUNTO DE FIOS DA CABINA
BEDRADING - CABINE
LEDNINGSNET - FØRERHUS

R	N	P.N.	MOD	Q	Description Denominacion	Descrizione Denominação	Description Beschrijving	Bezeichnung Beskrivelse	L.C.
1		87403843	a	1	HARNESS Cab HAZ	CABLAGGIO CHICOTE	FAISCEAU HARNESS	KABELSTRANG HARNESS	4160
1		87442147	b	1	HARNESS Cab HAZ	CABLAGGIO CHICOTE	FAISCEAU HARNESS	KABELSTRANG HARNESS	4160
2		437550A1		1	FLANGE 102 Pin Connector BRIDA	FLANGIA FALANGE	FLASQUE FLENS	FLANSCH FLANGE	070F
3		779-34319		4	SCREW M4,8 x 19 mm TORNILLO	VITE PARAFUSO	VIS SCHROEF	SCHRAUBE SKRUE	7450
4		515-22190		2	CLAMP 3/4 ID COLLAR	MORSETTO BRACADEIRA	COLLIER CLAMP	SCHELLE CLAMP	1640
5		516-22127		1	CLAMP 1/2 ID COLLAR	MORSETTO BRACADEIRA	COLLIER CLAMP	SCHELLE CLAMP	1640
6		825-2408		4	NUT M8 TUERCA	DADO PORCA	ECROU MOER	MUTTER MØTRIK	5780

(a) BSN JAZ132567
(b) ASN JAZ132567

04-08		p1	12/02

HARNESS - CAB ROOF, SHELF AND CD CHANGER
CABLAGGIO - TETTO, MENSOLA E CD-CHANGER DELLA CABINA
FAISCEAU DU TOIT DE LA CABINE, DE L'ÉTAGÈRE ET DU CHARGEUR DE CD
KABELBAUM FÜR KABINENDACH, ÜBERKOPFKONSOLE UND CD-WECHSLER

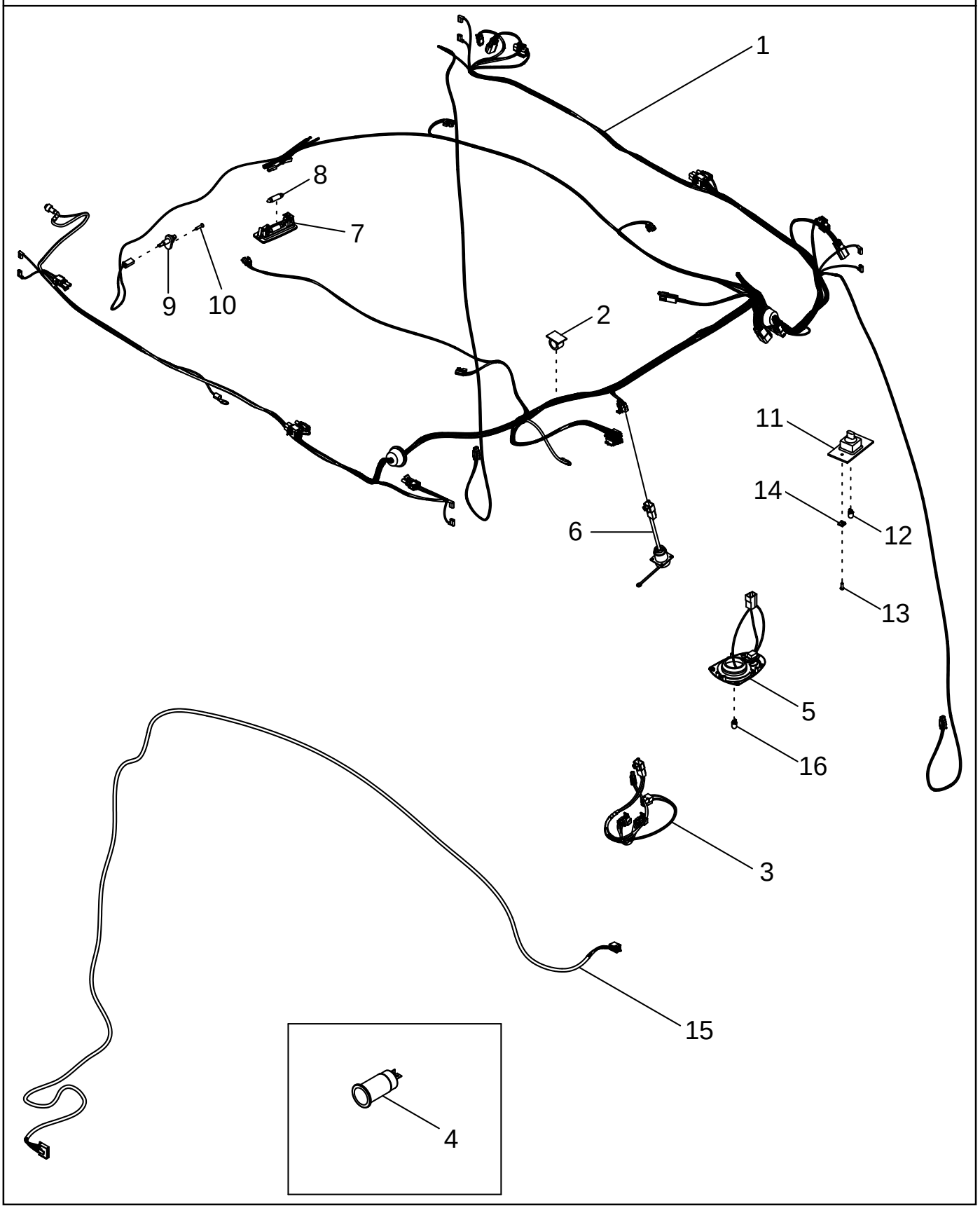

MAZO DE CABLES - TECHO DE LA CABINA, CAMBIADOR DE CD Y REPISA
CONJUNTO DE FIOS - TECTO DA CABINA, PRATELEIRA E MULTI-LEITOR DE CDS
BEDRADING - CABINEDAK, PLANK EN CD-WISSELAAR
LEDNINGSNET - FØRERHUSTAG, HYLDE OG CD-SKIFTER

R	N	P.N.	MOD	Q	Description Denominacion	Descrizione Denominação	Description Beschrijving	Bezeichnung Beskrivelse	L.C.
1		435211A2		1	HARNESS Cab Roof HAZ	CABLAGGIO CHICOTE	FAISCEAU HARNESS	KABELSTRANG HARNESS	4160
2		169850C2		3	ANCHOR FIJACION	ANCORAGGIO FIXADOR	PIECE DE FIXATION ANKER	VERANKERUNG ANKER	0120
3		280584A3		1	HARNESS Shelf HAZ	CABLAGGIO CHICOTE	FAISCEAU HARNESS	KABELSTRANG HARNESS	4160
4		308904A1		1	LIGHTER, CIGARETTE 12V, Power Outlet ENCENDEDOR DE CIGAI	ACCENDISIGARI ISQUEIRO	ALLUME-CIGARE SIGARENAANSTEKER	ZIGARRETTENANZÜNDE CIGARETTAENDER	005A
5		372892A1		1	LAMP Map, Inc. 16 FARO	FANALE FAROL	LAMPE LAMP	LEUCHTE LYGTE	009F
6		227739A2		2	CONNECTOR Harness, Aux Power CONECTOR	CONNESSIONE CONECTOR	CONNECTEUR VERBINDING	STECKVERBINDUNG ELI STIK	235C
7		1983391C1		1	LAMP Dome, Inc. 8 FARO	FANALE FAROL	LAMPE LAMP	LEUCHTE LYGTE	009F
8		E35556		1	BULB 12V, 10w BOMBILLA	LAMPADA LAMPADA	AMPOULE LAMP	GLÜHBIRNE PÆRE	030L
9		1534229C1		1	SWITCH, DOOR Door INTERRUPTOR PUERTA	INCERRRUTTORE PORT INTERRUPTOR	COMMUTATEUR PORTE DEURSCHAKELAAR	TÜRSCHALTER DØRKONTAKT	254S
10		765-14322		1	SCREW M4,2 x 22 mm TORNILLO	VITE PARAFUSO	VIS SCHROEF	SCHRAUBE SKRUE	7450
11		368143A1		1	LAMP Console Illuminator, Inc. 12 LAMPARA	LAMPADA LAMPADA	LAMPE LAMP	LEUCHTE LAMP	4960
12		D71346		1	LAMP, TAIL No. 168 LUZ POSTERIOR	FANALE POSTERIORE LUZ POSTERIOR	FEU ARRIERE ACHTERLICHT	SCHLUSSLEUCHTE BAGLYGTE	013F
13		760-17316		2	SCREW M4,2 x 16 TORNILLO	VITE PARAFUSO	VIS SCHROEF	SCHRAUBE SKRUE	7450
14		177269A1		2	NUT TUERCA	DADO PORCA	ECROU MOER	MUTTER MØTRIK	010D
15		303433A1		1	HARNESS CD Changer, If Equipped HAZ	CABLAGGIO CHICOTE	FAISCEAU HARNESS	KABELSTRANG HARNESS	4160
16		373114A1		1	BULB BOMBILLA	LAMPADA LAMPADA	AMPOULE LAMP	GLÜHBIRNE PÆRE	030L

HARNESS - SUSPENDED AXLE
CABLAGGIO - ASSALE SOSPESO
FAISCEAU DE L'ESSIEU SUSPENDU
KABELBAUM FÜR GEFEDERTE ACHSE

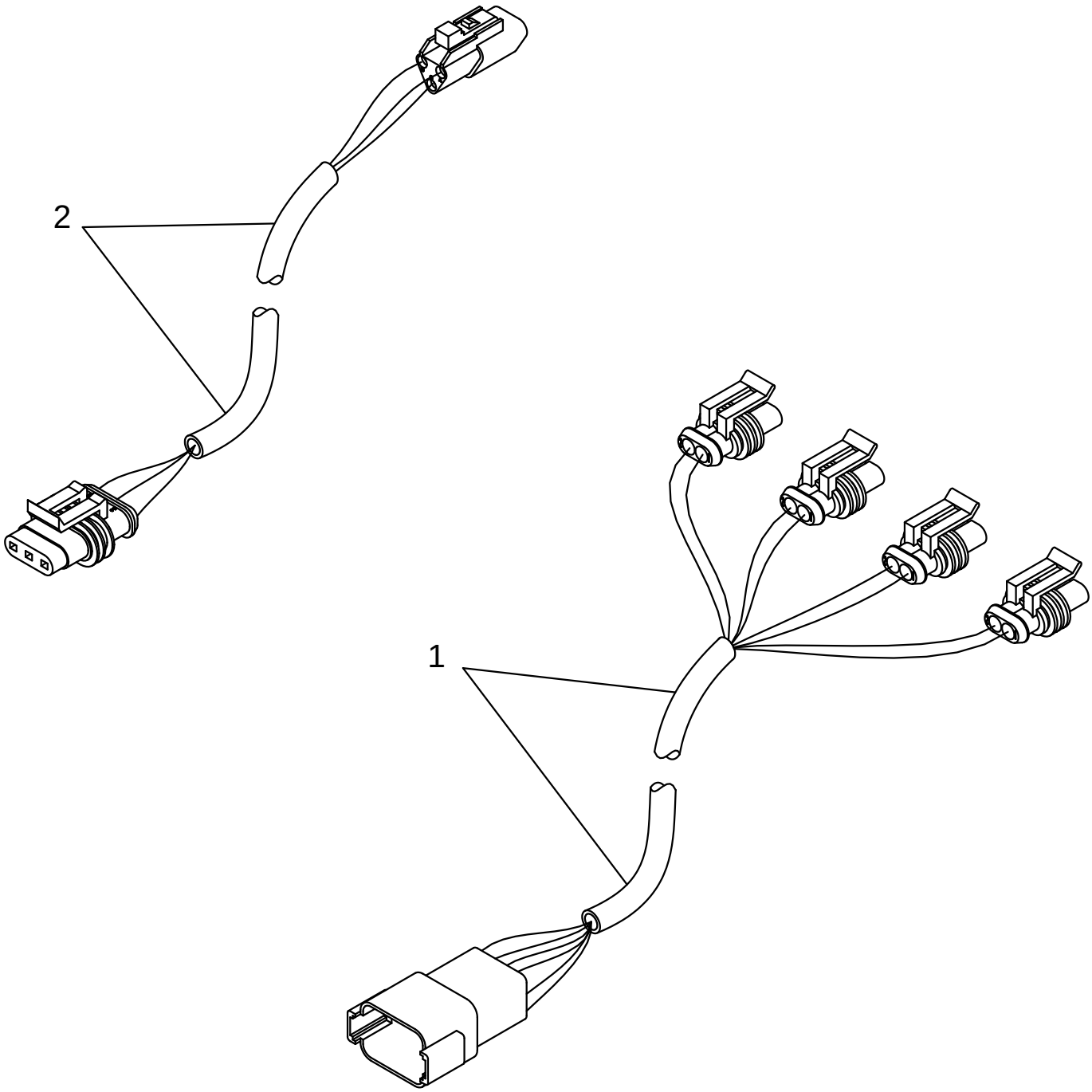

MAZO DE CABLES - EJE SUSPENDIDO
CONJUNTO DE FIOS - EIXO SUSPENSO
BEDRADING - BEWEEGBAAR OPGEHANGEN AS
LEDNINGSNET - OPHÆNGT AKSEL

R	N	P.N.	MOD	Q	Description Denominacion	Descrizione Denominação	Description Beschrijving	Bezeichnung Beskrivelse	L.C.
1		86984258		1	HARNESS Suspended Axle Solenoids				
						CABLAGGIO	FAISCEAU	KABELSTRANG	4160
					HAZ	CHICOTE	HARNESS	HARNESS	
2		87408291		1	HARNESS Suspended Axle Sensor				
						CABLAGGIO	FAISCEAU	KABELSTRANG	4160
					HAZ	CHICOTE	HARNESS	HARNESS	

04-10		p1	12/02

ELECTRICAL COMPONENT MOUNTING
SUPPORTO DEI COMPONENTI ELETTRICI
MONTAGE DES COMPOSANTS ÉLECTRIQUES
BEFESTIGUNG FÜR ELEKTROKOMPONENTEN

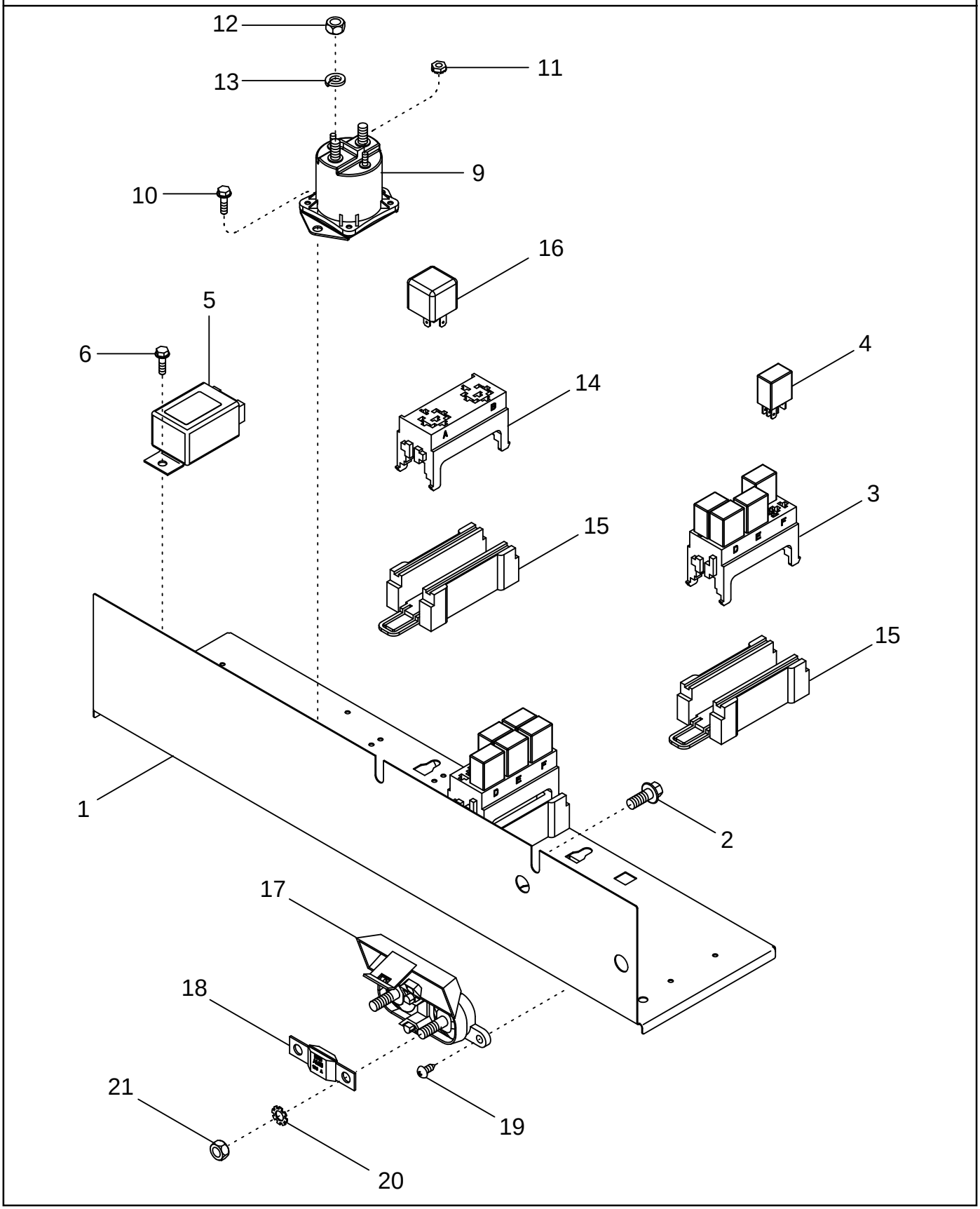

MONTAJE DEL COMPONENTE ELÉCTRICO
MONTAGEM DOS COMPONENTES ELÉCTRICOS
MONTAGE ELEKTRISCH ONDERDEEL
MONTERING AF ELEKTRISK KOMPONENT

R	N	P.N.	MOD	Q	Description Denominacion	Descrizione Denominação	Description Beschrijving	Bezeichnung Beskrivelse	L.C.
1		399428A5		1	PANEL CONTRAPANEL	PANNELLO PAINEL	PANNEAU PANEELWERK	TAFEL PANEL	025P
2		781-24820		3	SCREW M8 x 20 TORNILLO	VITE PARAFUSO	VIS SCHROEF	SCHRAUBE SKRUE	7450
3		144417A1		2	BLOCK, CONNECTING TABLERO DE BORNES	MORSETTIERA BLOCO DE LIGACÃO	BLOC DE JONCTION BLOK, VERBINDING	KLEMMENBRETT KLEMRÆKKE	119M
4		105849A1		11	RELAY 20 Amp CONECTADOR	RELE' CONECTADOR	RELAIS RELAIS	RELAIS RELAE	011R
5		1987397C2		1	UNIT, FLASHER CONJUNTO INTERMITEN	UNITA, LAMPEGGIANTE LAMPADA INTERMITENT	CENTRALE CLIGNOTANT UNIT, FLASHER	BLINKGEBEREINHEIT OVERSLAGSENHED	P655
6		780-34319		1	SCREW M4,8 x 19 TORNILLO	VITE PARAFUSO	VIS SCHROEF	SCHRAUBE SKRUE	7450
9		418485A1		1	SOLENOID SOLENOIDE	SOLENOIDE SOLEMOID	SOLENOIDE SOLENOIDE	MAGNETSPULE, MECH. MAGNETVENTIL	168S
10		780-34319		2	SCREW M4,8 x 19 TORNILLO	VITE PARAFUSO	VIS SCHROEF	SCHRAUBE SKRUE	7450
11		193-1000		2	NUT No. 10 NF TUERCA	DADO PORCA	ECROU MOER	MUTTER MØTRIK	5780
12		425-105		2	NUT 5/16 TUERCA	DADO PORCA	ECROU MOER	MUTTER MØTRIK	5780
13		492-11031		2	WASHER, LOCK 5/16 ARANDELA DE FRENO	ROSETTA DI SICUREZZA ARRUELA	RONDELLE FREIN VEERRING	FEDERRING LAASESKIVE	P264
14		NSS		1	NOT SERVICED SEPARATELY Block, Relay NO SE REPARA SEPARA	NON FORNITO SEPARAT NOT SERVICED SEPARA	NON FOURNI SEPAREMI NIET ALLEEN VERKRIJG	KEIN ERSATZTEIL NOT SERVICED SEPARA	064N
15		182163A1		3	CONNECTOR CONECTOR	CONNESSIONE CONECTOR	CONNECTEUR VERBINDING	STECKVERBINDUNG ELI STIK	235C
16		1983394C2		1	RELAY CONECTADOR	RELE' CONECTADOR	RELAIS RELAIS	RELAIS RELAE	011R
17		440038A1		1	JUNCTION CONEXION	CONESSION CONEXAO	JONCTION JUNCTION	VERZWEIGUNG JUNCTION	P235
18		440572A1		1	FUSE 100 Amp FUSIBLE	FUSIBILE FUSIVEL	FUSIBLE ZEKERING	SICHERUNG SIKRING	110F
19		760-14413		2	SCREW 4,8 x 13 mm TORNILLO	VITE PARAFUSO	VIS SCHROEF	SCHRAUBE SKRUE	7450
20		893-11008		2	WASHER M8 ARANDELA	ROSETTA PIANA ANILHA	RONDELLE SLUITRING	BEILAGSCHEIBE FLADSKIVE	131R
21		829-1408		2	NUT M8; 10 TUERCA	DADO PORCA	ECROU MOER	MUTTER MØTRIK	010D

04-11		p1	12/02

ELECTRICAL COMPONENT MOUNTING - FUSES
SUPPORTO DEI COMPONENTI ELETTRICI - FUSIBILI
MONTAGE DES COMPOSANTS ÉLECTRIQUES - FUSIBLES
BEFESTIGUNG FÜR ELEKTROKOMPONENTEN – SICHERUNGEN

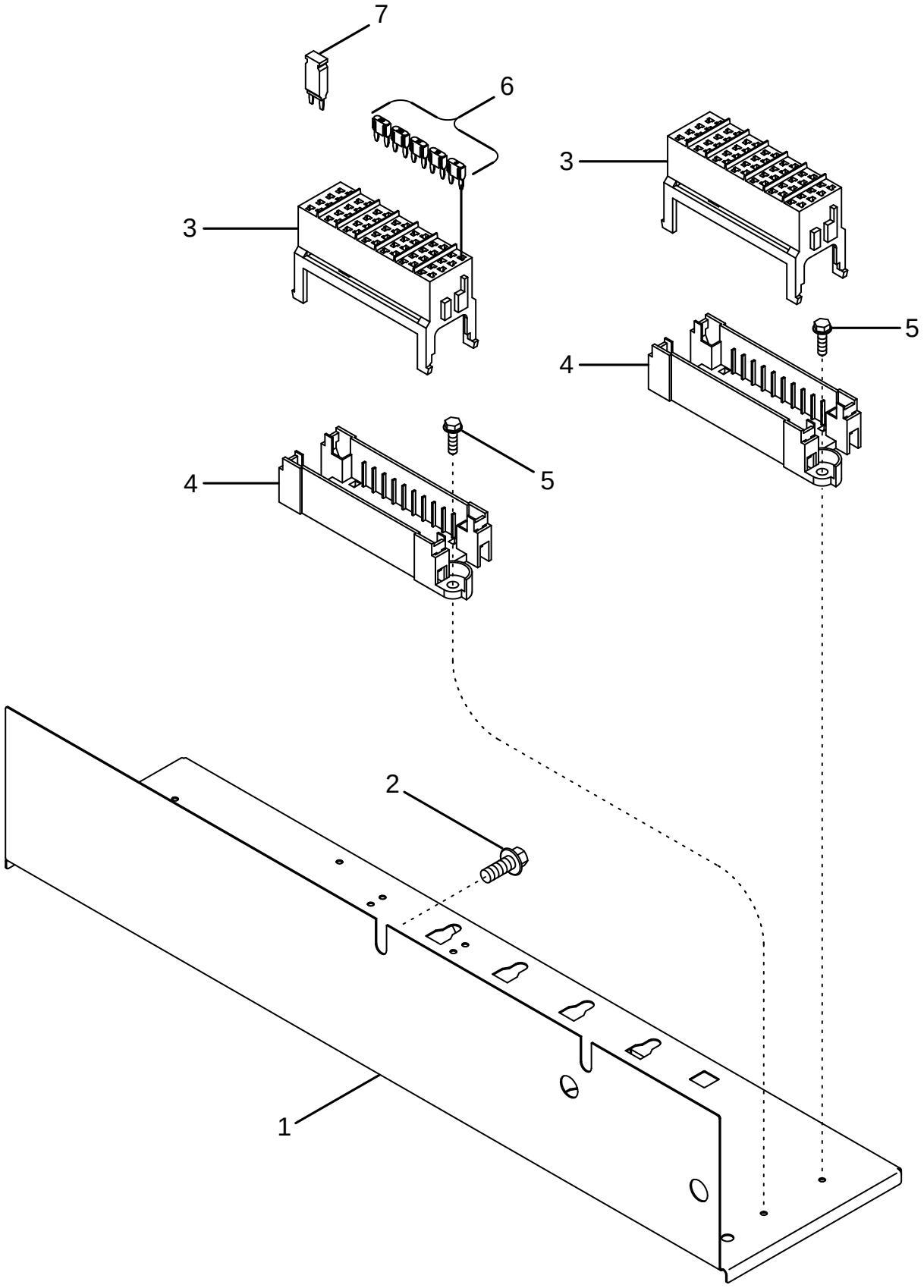

MONTAJE DE COMPONENTES ELÉCTRICOS - FUSIBLES
MONTAGEM DOS COMPONENTES ELÉCTRICOS - FUSÍVEIS
MONTAGE ELEKTRISCH ONDERDEEL - ZEKERINGEN
MONTERING AF ELEKTRISK KOMPONENT - SIKRINGER

R	N	P.N.	MOD	Q	Description Denominacion	Descrizione Denominação	Description Beschrijving	Bezeichnung Beskrivelse	L.C.
1		399428A5		1	PANEL CONTRAPANEL	PANNELLO PAINEL	PANNEAU PANEELWERK	TAFEL PANEL	025P
2		781-24820		3	SCREW M8 x 20 TORNILLO	VITE PARAFUSO	VIS SCHROEF	SCHRAUBE SKRUE	7450
3		144421A1		2	BLOCK, CONNECTING TABLERO DE BORNES	MORSETTIERA BLOCO DE LIGACÃO	BLOC DE JONCTION BLOK, VERBINDING	KLEMMENBRETT KLEMRÆKKE	119M
4		194319A1		2	BASE APOYO	BASE BASE	SOCLE BASIS	SOCKEL BUNDPLADE	021B
5		780-34319		2	SCREW M4,8 x 19 TORNILLO	VITE PARAFUSO	VIS SCHROEF	SCHRAUBE SKRUE	7450
6		121410A1		AR	FUSE 5 Amp FUSIBLE	FUSIBILE FUSIVEL	FUSIBLE ZEKERING	SICHERUNG SIKRING	110F
6		121412A1		AR	FUSE 10 Amp FUSIBLE	FUSIBILE FUSIVEL	FUSIBLE ZEKERING	SICHERUNG SIKRING	110F
6		121413A1		AR	FUSE 15 Amp FUSIBLE	FUSIBILE FUSIVEL	FUSIBLE ZEKERING	SICHERUNG SIKRING	110F
6		121414A1		AR	FUSE 20 Amp FUSIBLE	FUSIBILE FUSIVEL	FUSIBLE ZEKERING	SICHERUNG SIKRING	110F
6		121416A1		AR	FUSE 30 Amp FUSIBLE	FUSIBILE FUSIVEL	FUSIBLE ZEKERING	SICHERUNG SIKRING	110F
7		139719A1		1	CIRCUIT BREAKER 15 Amp INTERRUPTOR AUTOMA	INTERRUTTORE AUTOM ROTOR	COUPE-CIRCUIT STROOMVERBREKER	LEISTUNGSCHALTER AFBRYDER	165R

04-12		p1	12/02

A-POST COVER - INSTRUMENT CLUSTER
COPERCHIO DEL MONTANTE AD A - QUADRO STRUMENTI
PROTECTION DU MONTANT EN A DU TABLEAU DE BORD
HAUPTRAHMENABDECKUNG – ARMATURENBRETT

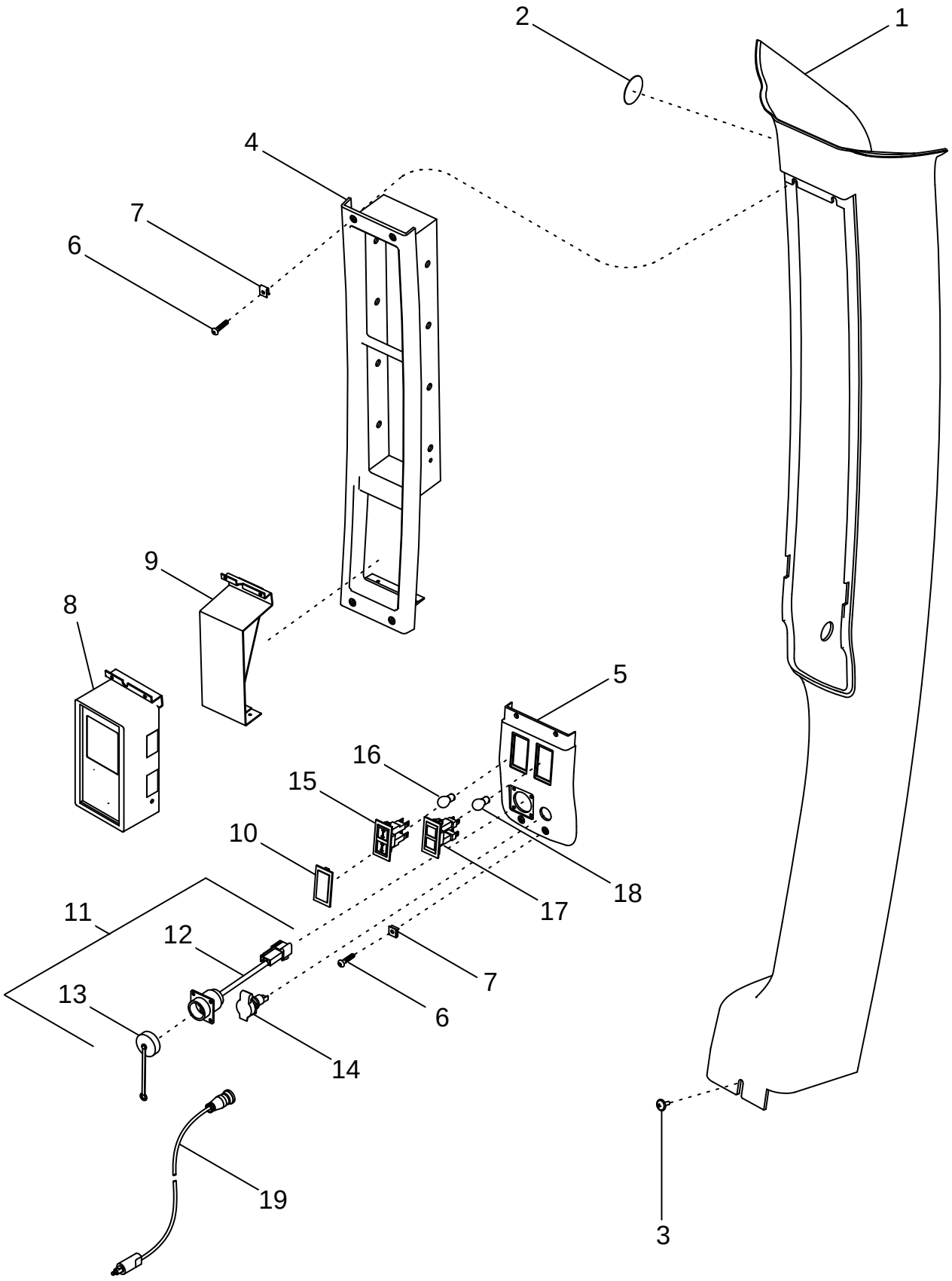

CUBIERTA DEL POSTE-A - GRUPO DE INSTRUMENTOS
COBERTURA DO POSTE A - CONJUNTO DE INSTRUMENTOS
KAP A-STIJL - INSTRUMENTENPANEEL
A-STOLPEDÆKSEL - INSTRUMENTGRUPPE

R	N	P.N.	MOD	Q	Description Denominacion	Descrizione Denominação	Description Beschrijving	Bezeichnung Beskrivelse	L.C.
1		444547A1		1	TRIM PANEL	TAPPEZZERIA	PANNEAU-TAPISSERIE	ARMATURENVERKLEIDU	032T
					TAPICERIA	TAPECARIA	AANPASBARE PANELEN	TRIM PANEL	
2		376597A2		2	COVER	COPERCHIO	COUVERCLE	DECKEL	265C
					TAPADERA	COBERTA	DEKSEL	DÆKSEL	
3		1975782C1		1	SCREW	VITE	VIS	SCHRAUBE	040V
					TORNILLO	PARAFUSO	SCHROEF	SKRUE	
4		86989494		1	CLUSTER, INSTRUMENT Without Software				
						QUADRO STRUMENTI	COMBINE DE BORD	KOMBIINSTRUMENT	P224
					VELOCIMETRO COMBIN	INSTRUMENTO COMBIN	CLUSTER, INSTRUMENT	KLYNGE, INSTR.	
5		358804A1		1	BEZEL	MOSTRINA	ENCADREMENT	DECKRING	0680
					MARCO	CHAPA DE ORNAMENTO	SIERPLAAT	ORNAMENTERING	
6		260-16516		6	SCREW No. 10 x 1	VITE	VIS	SCHRAUBE	7450
					TORNILLO	PARAFUSO	SCHROEF	SKRUE	
7		177269A1		7	NUT	DADO	ECROU	MUTTER	010D
					TUERCA	PORCA	MOER	MØTRIK	
8		86990264		1	MODULE Performance, Without Software				
						MODULE	MODULE	MODUL	T102
					MODULE	MODULE	MODULE	MODULE	
9		358296A1		1	PANEL Blanking	PANNELLO	PANNEAU	TAFEL	025P
					CONTRAPANEL	PAINEL	PANEELWERK	PANEL	
10		245918C1		2	CAP Blanking, (If Equipped)	TAPPO SERBATOIO	CHAPEAU	KAPPE	052T
					TAPON DEL DEPOSITO	TAMPAO DE RESERVAT	RESERVOIRDOP	TANKDAEKSEL	
11		227739A2		1	CONNECTOR Auxiliary Power, Inc. 12, 13				
						CONNESSIONE	CONNECTEUR	STECKVERBINDUNG ELI	235C
					CONECTOR	CONECTOR	VERBINDING	STIK	
12		225164C1		1	CONNECTOR	CONNESSIONE	CONNECTEUR	STECKVERBINDUNG ELI	235C
					CONECTOR	CONECTOR	VERBINDING	STIK	
13		225162C1		1	PLUG Dust	TAPPO	BOUCHON	STOPFEN	050T
					TAPÓN	BUJÃO	PLUG	PROP	
14		300655A1		1	SOCKET, POWER	PRESA DI CORRENTE	PRISE DE COURANT	STECKDOSE	205P
					ENCHUFFE DE CORRIEN	TOMADA DE CORRENTE	STOPKONTAKT	STROEMUDTAG	
15		1955167C1		1	SIGHTGLASS 1st and 2nd Trailer Indicator, Inc. 16, (If Equipped)				
						INDICATORE, VISTA	VOYANT	SCHAUGLAS	Z238
					VISOR DE NIVEL	VISOR DE NIVEL	SIGHTGLASS	SIGHTGLASS	
16		3141107R1		2	BULB 12V	LAMPADA	AMPOULE	GLÜHBIRNE	030L
					BOMBILLA	LAMPADA	LAMP	PÆRE	
17		284742A1		1	INDICATOR Auto Pickup Hitch and Pnuematic Brake Indicator, Inc. 18, (If Equipped)				
						SEGNALATORE	INDICATEUR	ANZEIGE	087S
					TESTIGO	INDICADOR	AANWIJZER	INDIKATOR	
18		3141107R1		2	BULB 12V	LAMPADA	AMPOULE	GLÜHBIRNE	030L
					BOMBILLA	LAMPADA	LAMP	PÆRE	
19		324847A2		1	HARNESS Monitor	CABLAGGIO	FAISCEAU	KABELSTRANG	4160
					HAZ	CHICOTE	HARNESS	HARNESS	

CONTROLS - FRONT CONSOLE
COMANDI - QUADRO FRONTALE
COMMANDES DE LA CONSOLE AVANT
BEDIENELEMENTE - VORDERE BEDIENKONSOLE

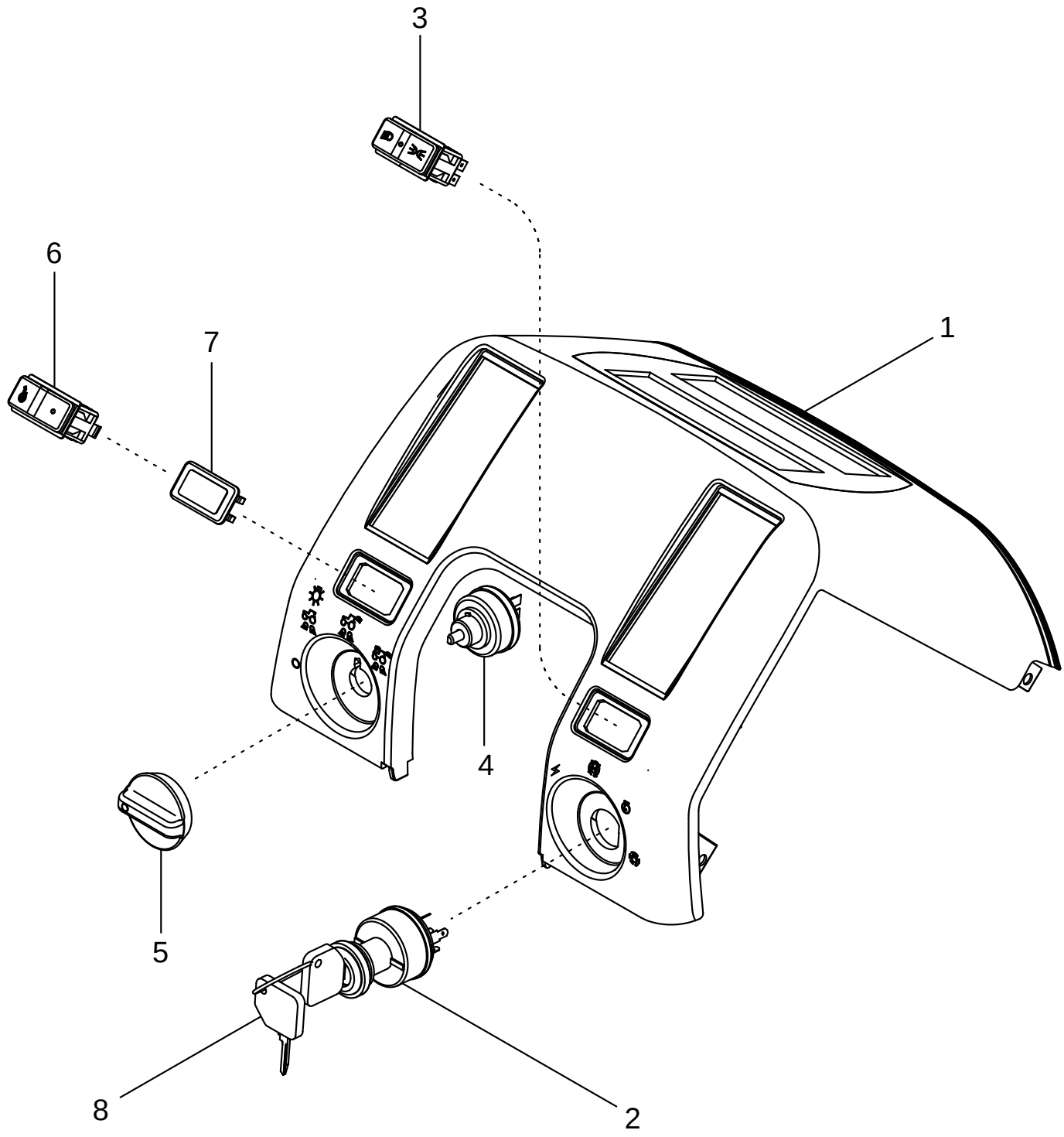

CONTROLES - CONSOLA DELANTERA
CONTROLOS - CONSOLA DIANTEIRA
BEDIENINGSORGANEN - VOORPANEEL
BETJENINGSGREB - FRONTKONSOL

R	N	P.N.	MOD	Q	Description Denominacion	Descrizione Denominação	Description Beschrijving	Bezeichnung Beskrivelse	L.C.
1		358672A1		1	COVER TAPA	COPERCHIO TAMPA	COUVERCLE COVER	DECKEL COVER	2250
2		427182A1		1	SWITCH With Key CONTACTOR	INTERRUTTORE INTERRUPTOR	CONTACTEUR SCHAKELAAR	SCHALTER KONTAKT	075I
3		86989957		1	SWITCH, LIGHTS Position and Road Lights INTERRUPTOR	INTERRUTTORE, LUCI INTERRUPTOR	COMM. LUMIERES SCHAKELAAR, LICHTEN	LICHTSCHALTER (MZ) LYSKONTAKT	228S
4		177250A1		1	SWITCH, LIGHTS Work Lights INTERRUPTOR	INTERRUTTORE, LUCI INTERRUPTOR	COMM. LUMIERES SCHAKELAAR, LICHTEN	LICHTSCHALTER (MZ) LYSKONTAKT	228S
5		1331046C2		1	KNOB POMO	POMELLO BOTAO	POMMEAU KNOP	KNOPF KNAP	150P
6		86989943		1	SWITCH Ether CONTACTOR	INTERRUTTORE INTERRUPTOR	CONTACTEUR SCHAKELAAR	SCHALTER KONTAKT	075I
7		126844A1		1	PLUG TAPÓN	TAPPO BUJÃO	BOUCHON PLUG	STOPFEN PROP	050T
8		1964831C2		1	SET OF 2 KEYS JUEGO DE 2 LLAVES	KIT,DUE TASTI JOGO 2 CHAVES	JEU DE 2 CLES SET OF 2 KEYS	SCHLÜSSEL, SATZ 2 STI SKRUENØGLESÆT	Z524

04-14		p1	10/04

CONTROLS - RIGHT HAND CONSOLE
COMANDI - QUADRO DESTRO
COMMANDES DE LA CONSOLE DROITE
BEDIENELEMENTE - RECHTE BEDIENKONSOLE

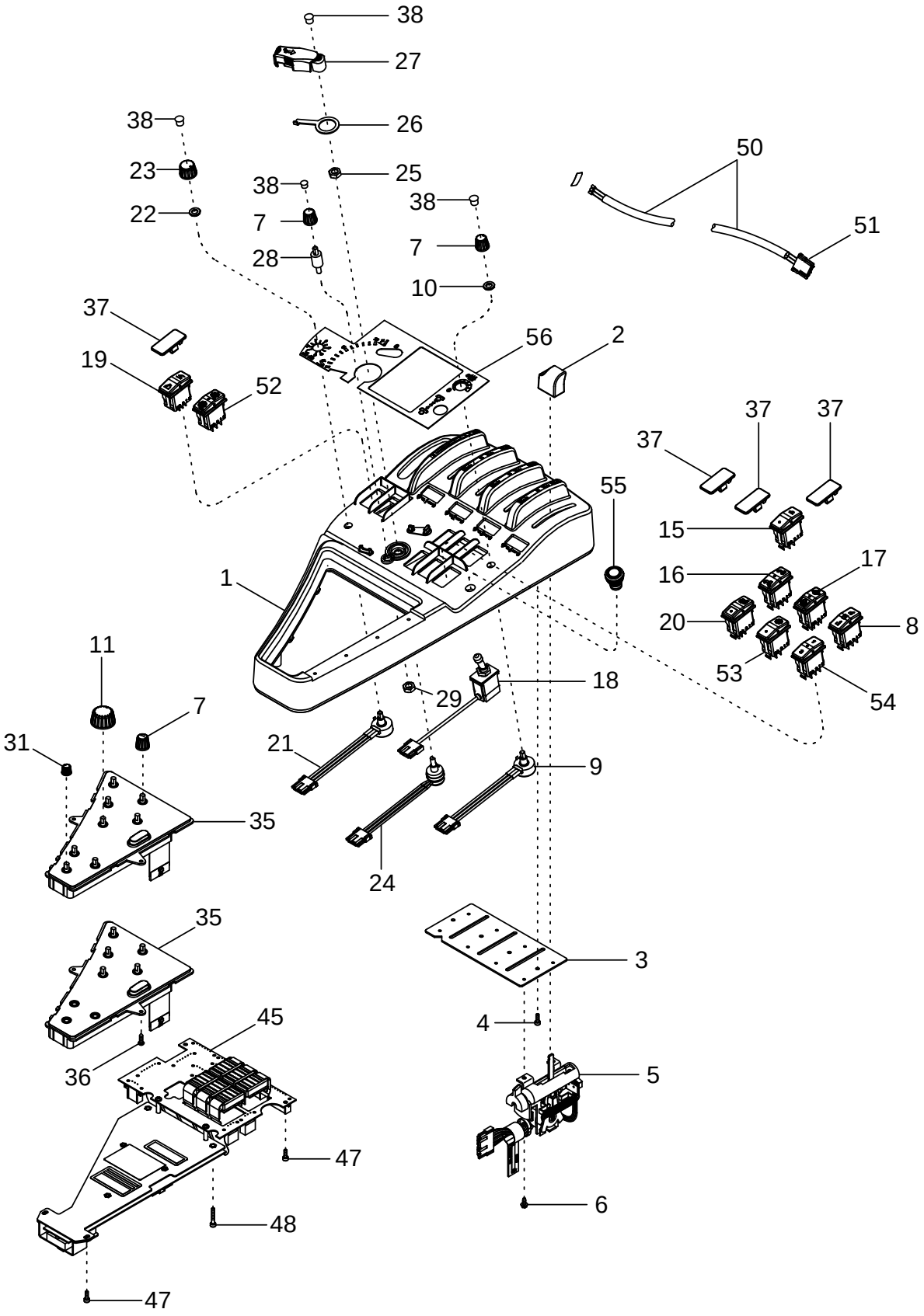

CONTROLES - CONSOLA DERECHA
CONTROLOS - CONSOLA DO LADO DIREITO
BEDIENINGSORGANEN, RECHTER PANEEL
BETJENINGSGREB, HØJRE KONSOL

R	N	P.N.	MOD	Q	Description Denominacion	Descrizione Denominação	Description Beschrijving	Bezeichnung Beskrivelse	L.C.
1	1	REF		1	INSTRUCTION Cover Assembly				
						ISTRUZIONI	NOTICE	HINWEIS	Z571
					MANUAL	INSTRUCAO	INSTRUCTION	SKO, INDRE	
2		406962A1		AR	KNOB	POMELLO	POMMEAU	KNOPF	150P
					POMO	BOTAO	KNOP	KNAP	
3		230098A1		1	PLATE	PIASTRA	PLAQUE	PLATTE	105P
					PLACA	CHAPA	PLAAT	PLADE	
4		368048A1		4	SCREW M4 x 12	VITE	VIS	SCHRAUBE	040V
					TORNILLO	PARAFUSO	SCHROEF	SKRUE	
5		406961A1		AR	VALVE, CONTROL Remote Hydraulics				
						DISTRIBUTORE	DISTRIBUTEUR	STEUERGERAET	083D
					VALVULA DISTRIBUIDOF	VALVULA DE CONTROLE	KONTROLEKLEP	STYREVENTIL	
6		281-3446		AR	SCREW No. 8 NC x 3/8 in	VITE	VIS	SCHRAUBE	7450
					TORNILLO	PARAFUSO	SCHROEF	SKRUE	
7		276797A1		AR	KNOB	POMELLO	POMMEAU	KNOPF	150P
					POMO	BOTAO	KNOP	KNAP	
8		86989947		1	SWITCH 5th Remote	INTERRUTTORE	CONTACTEUR	SCHALTER	075I
					CONTACTOR	INTERRUPTOR	SCHAKELAAR	KONTAKT	
9		256305A2		1	POTENTIOMETER Flow Control, 5th Remote, Inc. 10				
						POTENZIOMETRO	POTENTIOMETRE	POTENTIOMETER	550P
					POTENCIOMETRO	POTENCIOMETRO	POTENTIOMETER	POTENTIOMETER	
10		A39888		2	NUT 3/8-32	DADO	ECROU	MUTTER	010D
					TUERCA	PORCA	MOER	MØTRIK	
11		187820A1		1	BUTTON	BOTTONE	BOUTON	KNOPF	120B
					BOTON	BOTAO	KNOP	KNAP	
15		86989950		1	SWITCH Creep Speed	INTERRUTTORE	CONTACTEUR	SCHALTER	075I
					CONTACTOR	INTERRUPTOR	SCHAKELAAR	KONTAKT	
16		86989948		1	SWITCH MFD	INTERRUTTORE	CONTACTEUR	SCHALTER	075I
					CONTACTOR	INTERRUPTOR	SCHAKELAAR	KONTAKT	
17		86989963		1	SWITCH Differential Lock	INTERRUTTORE	CONTACTEUR	SCHALTER	075I
					CONTACTOR	INTERRUPTOR	SCHAKELAAR	KONTAKT	
18		409603A2		1	SWITCH PTO	INTERRUTTORE	CONTACTEUR	SCHALTER	075I
					CONTACTOR	INTERRUPTOR	SCHAKELAAR	KONTAKT	
19		86990406		1	SWITCH Hitch Control	INTERRUTTORE	CONTACTEUR	SCHALTER	075I
					CONTACTOR	INTERRUPTOR	SCHAKELAAR	KONTAKT	
20		86989960		1	SWITCH Slip Limit Control	INTERRUTTORE	CONTACTEUR	SCHALTER	075I
					CONTACTOR	INTERRUPTOR	SCHAKELAAR	KONTAKT	
21		256305A2		1	POTENTIOMETER Draft Control, Inc. 22				
						POTENZIOMETRO	POTENTIOMETRE	POTENTIOMETER	550P
					POTENCIOMETRO	POTENCIOMETRO	POTENTIOMETER	POTENTIOMETER	
22		A39888		1	NUT 3/8-32	DADO	ECROU	MUTTER	010D
					TUERCA	PORCA	MOER	MØTRIK	
23		314601A1		1	BUTTON	BOTTONE	BOUTON	KNOPF	120B
					BOTON	BOTAO	KNOP	KNAP	
24		256304A2		1	POTENTIOMETER Hitch Position				
						POTENZIOMETRO	POTENTIOMETRE	POTENTIOMETER	550P
					POTENCIOMETRO	POTENCIOMETRO	POTENTIOMETER	POTENTIOMETER	

(1) See Figure 09-34

04-14		p2	10/04

CONTROLS - RIGHT HAND CONSOLE
COMANDI - QUADRO DESTRO
COMMANDES DE LA CONSOLE DROITE
BEDIENELEMENTE - RECHTE BEDIENKONSOLE

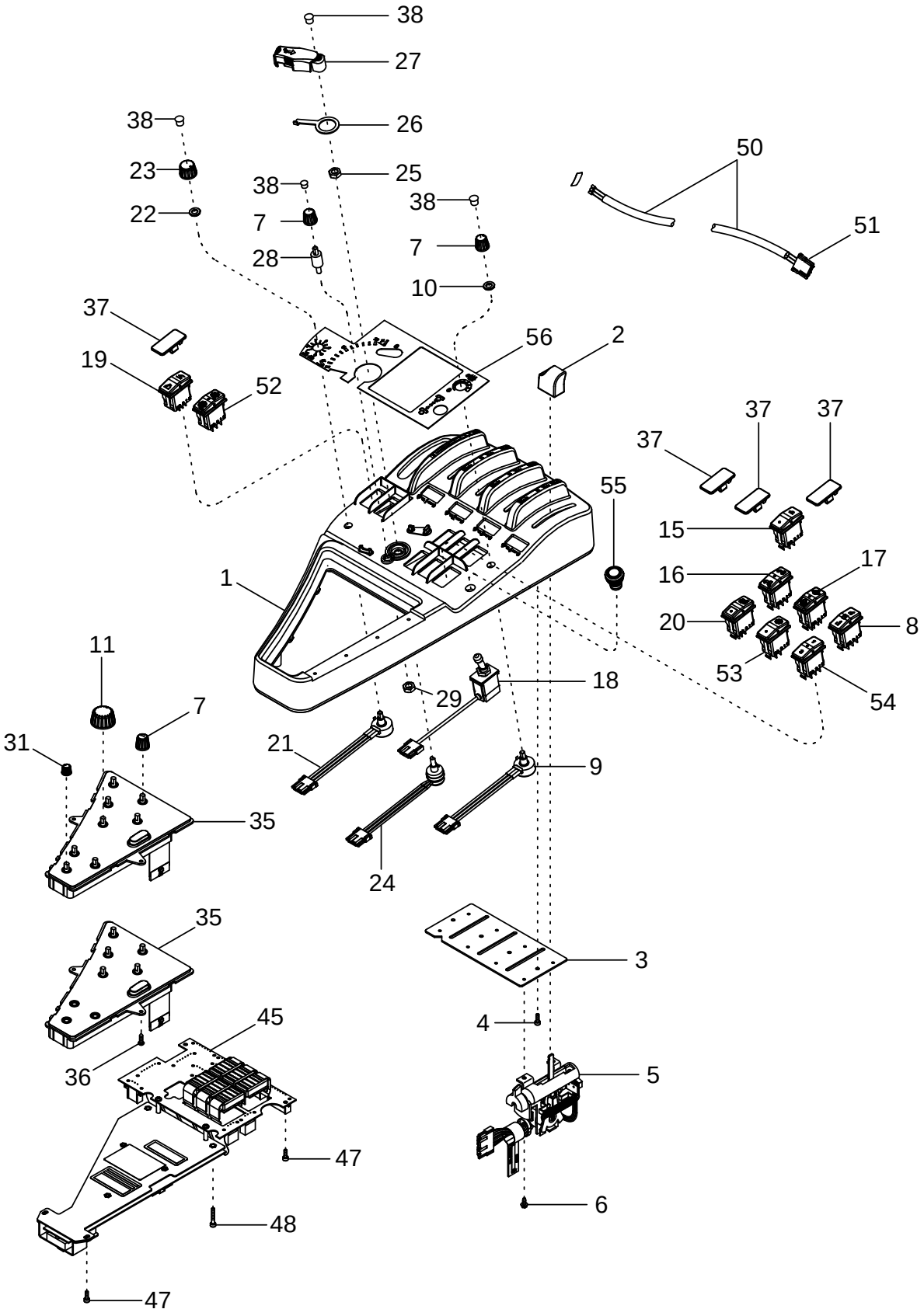

CONTROLES - CONSOLA DERECHA
CONTROLOS - CONSOLA DO LADO DIREITO
BEDIENINGSORGANEN, RECHTER PANEEL
BETJENINGSGREB, HØJRE KONSOL

R	N	P.N.	MOD	Q	Description Denominacion	Descrizione Denominação	Description Beschrijving	Bezeichnung Beskrivelse	L.C.
25		192231A1		1	NUT 1/4 in TUERCA	DADO PORCA	ECROU MOER	MUTTER MØTRIK	010D
26		248087A1		1	LEVER PALANCA	LEVA ALAVANCA	LEVIER HEFBOOM	HEBEL HAANDTAG	045L
27		411821A3		1	LEVER ASSY. PALANCA (CONJUNTO)	LEVA, COMPLESSIVO ALAVANCA CONJUNTO	LEVIER (ASSEMBLE) LEVER ASSY.	HEBEL (KPLT.) LEVER ASSY.	P520
28		256303A1		1	STUD PRISIONERO	PRIGIONIERO PERNE	GOUJON TAPEIND	STEHBOLZEN STOETTEBOLT	210P
29		829-1406		1	NUT M6; 10.9 TUERCA	DADO PORCA	ECROU MOER	MUTTER MØTRIK	010D
31		223433A1		3	KNOB POMO	POMELLO BOTAO	POMMEAU KNOP	KNOPF KNAP	150P
35		232869A5		1	PANEL With Hitch CONTRAPANEL	PANNELLO PAINEL	PANNEAU PANEELWERK	TAFEL PANEL	025P
35		238290A4		1	PANEL Without Hitch CONTRAPANEL	PANNELLO PAINEL	PANNEAU PANEELWERK	TAFEL PANEL	025P
35		87443735		1	PANEL With End-of-Row System CONTRAPANEL	PANNELLO PAINEL	PANNEAU PANEELWERK	TAFEL PANEL	025P
36		760-14316		2	SCREW M4,2 x 16 TORNILLO	VITE PARAFUSO	VIS SCHROEF	SCHRAUBE SKRUE	7450
37		406324A2		AR	PLUG TAPÓN	TAPPO BUJÃO	BOUCHON PLUG	STOPFEN PROP	050T
38		353-402		AR	PLUG 3/8 TAPÓN	TAPPO BUJAO	BOUCHON PLUG	STOPFEN PROP	6400
38		353-401		AR	PLUG 5/16 TAPÓN	TAPPO BUJAO	BOUCHON PLUG	STOPFEN PROP	6400
45		86990793		1	UNIT Without Software UNIDAD	UNITA UNIDADE	UNITE UNIT	EINHEIT UNIT	P392
45		87415109		1	UNIT Without Software, With End-of-Row System UNIDAD	UNITA UNIDADE	UNITE UNIT	EINHEIT UNIT	P392
47		864-4012		4	SCREW M4 x 12 TORNILLO	VITE PARAFUSO	VIS SCHROEF	SCHRAUBE SKRUE	7450
48		864-4025		2	SCREW M4 x 25; 8,8 TORNILLO	VITE PARAFUSO	VIS SCHROEF	SCHRAUBE SKRUE	7450
50		258010A2		1	SWITCH Transmission Shift CONTACTOR	INTERRUTTORE INTERRUPTOR	CONTACTEUR AAN-UIT SCHAKELAAR	SCHALTER KONTAKT	8850
51		235676A1		1	CONNECTOR CONECTOR	CONNESSIONE CONECTOR	CONNECTEUR VERBINDING	STECKVERBINDUNG ELI STIK	1950
52		86989945		1	SWITCH Programmable Shift CONTACTOR	INTERRUTTORE INTERRUPTOR	CONTACTEUR SCHAKELAAR	SCHALTER KONTAKT	075I
52		87422017		1	SWITCH End-of-Row Step/Pause, With End-of-Row System CONTACTOR	INTERRUTTORE INTERRUPTOR	CONTACTEUR SCHAKELAAR	SCHALTER KONTAKT	075I
53		86989949		1	SWITCH Autoshift CONTACTOR	INTERRUTTORE INTERRUPTOR	CONTACTEUR SCHAKELAAR	SCHALTER KONTAKT	075I

CONTROLS - RIGHT HAND CONSOLE
COMANDI - QUADRO DESTRO
COMMANDES DE LA CONSOLE DROITE
BEDIENELEMENTE - RECHTE BEDIENKONSOLE

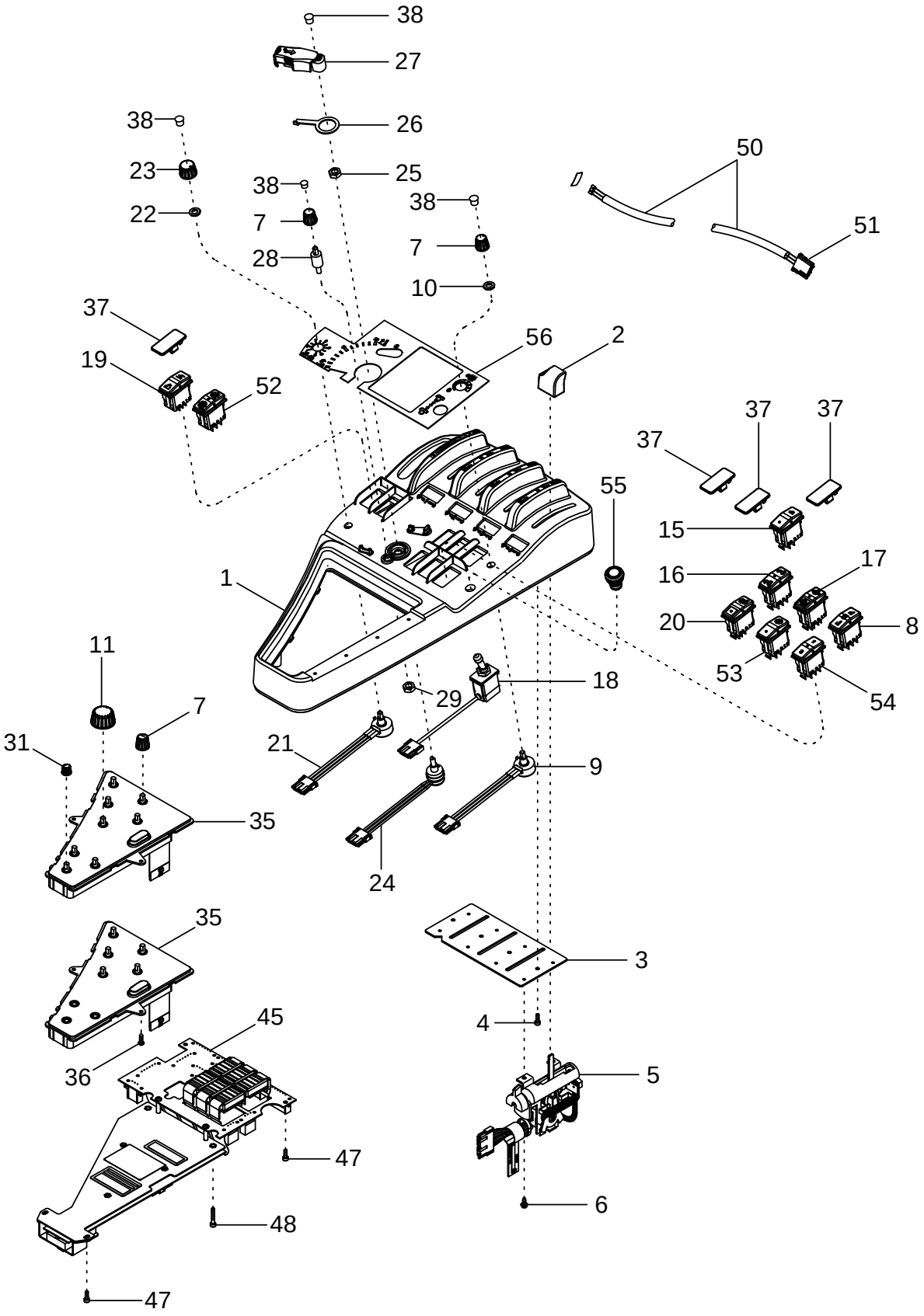

CONTROLES - CONSOLA DERECHA
CONTROLOS - CONSOLA DO LADO DIREITO
BEDIENINGSORGANEN, RECHTER PANEEL
BETJENINGSGREB, HØJRE KONSOL

R	N	P.N.	MOD	Q	Description Denominacion	Descrizione Denominação	Description Beschrijving	Bezeichnung Beskrivelse	L.C.
54		86989951		1	SWITCH Scraper CONTACTOR	INTERRUTTORE INTERRUPTOR	CONTACTEUR SCHAKELAAR	SCHALTER KONTAKT	075I
55		411705A3		1	KNOB PTO Switch POMO	POMELLO BOTAO	POMMEAU KNOP	KNOPF KNAP	150P
56		406315A2		1	DECAL CALCOMANIA	DECALCOMANIA DECALCOMANIA	DECALCOMANIE DECAL	ABZIEHBILD TRANSFER	012D

04-15		p1	12/02

CONTROLS - RIGHT FENDER CONSOLE, WITHOUT ATC
COMANDI - QUADRO PARAFANGO DESTRO, SENZA COMANDI AUTOMATICI DELLA CABINA
COMMANDES DE LA CONSOLE DE GARDE-BOUE DROITE, SANS ATC
BEDIENELEMENTE – RECHTE KOTFLÜGEL-BEDIENKONSOLE OHNE AUTOMATISCHE TEMPERRATURREGELUNG

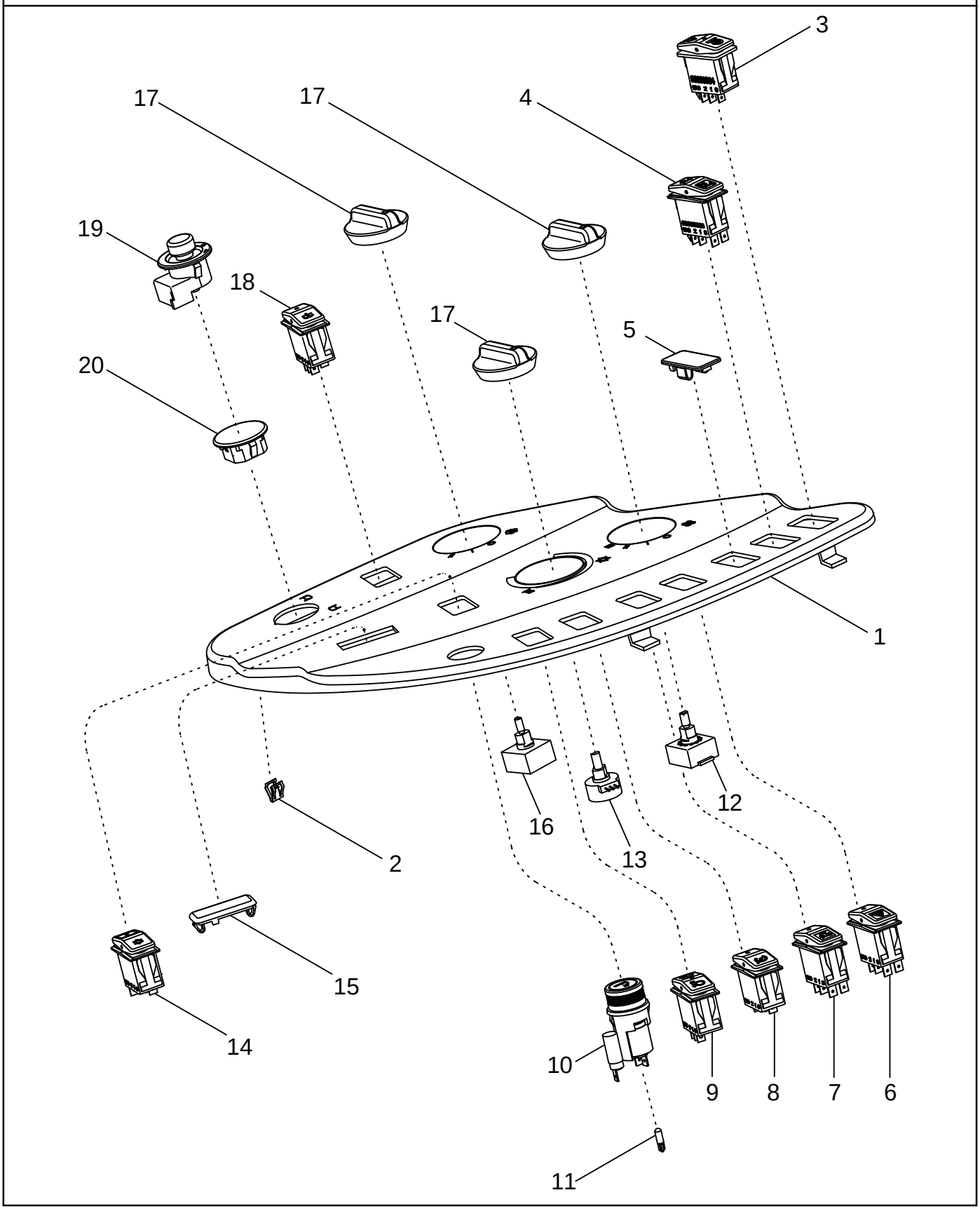

CONTROLES - CONSOLA DEL GUARDABARROS DERECHO, SIN ATC
CONTROLOS - CONSOLA DO GUARDA-LAMAS DIREITO, SEM ATC
BEDIENINGSORGANEN - RECHTER SPATBORDPANEEL, ZONDER ATC
BETJENINGSGREB - HØJRE SKÆRMKONSOL, UDEN ATC

R	N	P.N.	MOD	Q	Description Denominacion	Descrizione Denominação	Description Beschrijving	Bezeichnung Beskrivelse	L.C.
1		409304A2		1	PANEL CONTRAPANEL	PANNELLO PAINEL	PANNEAU PANEELWERK	TAFEL PANEL	025P
2		278316A2		2	CLIP SUJETADOR	FERMAGLIO FIXADOR	CLIP KLEM	KLAMMER KLIPS	045F
3		86989964		1	SWITCH Ride Control/Hitch Latch CONTACTOR	INTERRUTTORE INTERRUPTOR	CONTACTEUR SCHAKELAAR	SCHALTER KONTAKT	075I
4		86989938		1	SWITCH Suspended Axle CONTACTOR	INTERRUTTORE INTERRUPTOR	CONTACTEUR SCHAKELAAR	SCHALTER KONTAKT	075I
5		406324A2		AR	PLUG TAPÓN	TAPPO BUJÃO	BOUCHON PLUG	STOPFEN PROP	050T
6		86989962		1	SWITCH, FLASHER Hazard INTERR. LAMPARA INTE	INTERRUTTORE LAMPE INTERRUPTOR	COMM. CLIGNOTANT SCHAKELAAR,RICHTING	SCHALTER, BLINKLICHT KONTAKT,BLINKLYS	260S
7		86989941		1	SWITCH, LIGHTS Becon/Strobe Light INTERRUPTOR	INTERRUTTORE, LUCI INTERRUPTOR	COMM. LUMIERES SCHAKELAAR, LICHTEN	LICHTSCHALTER (MZ) LYSKONTAKT	228S
8		86989955		1	SWITCH Cruise Control, On/Off CONTACTOR	INTERRUTTORE INTERRUPTOR	CONTACTEUR SCHAKELAAR	SCHALTER KONTAKT	075I
9		86989953		1	SWITCH Cruise Control, Increase/Decrease CONTACTOR	INTERRUTTORE INTERRUPTOR	CONTACTEUR SCHAKELAAR	SCHALTER KONTAKT	075I
10		432239A1		1	LIGHTER, CIGARETTE Inc. 11 ENCENDEDOR DE CIGA	ACCENDISIGARI ISQUEIRO	ALLUME-CIGARE SIGARENAANSTEKER	ZIGARRETTENANZÜNDE CIGARETTAENDER	005A
11		437324A1		1	BULB BOMBILLA	LAMPADA LAMPADA	AMPOULE LAMP	GLÜHBIRNE PÆRE	030L
12		92100C2		11	SWITCH Blower Motor CONTACTOR	INTERRUTTORE INTERRUPTOR	CONTACTEUR SCHAKELAAR	SCHALTER KONTAKT	075I
13		326282A1		1	POTENTIOMETER Cab Temperature POTENCIOMETRO	POTENZIOMETRO POTENCIOMETRO	POTENTIOMETRE POTENTIOMETER	POTENTIOMETER POTENTIOMETER	550P
14		87405636		1	SWITCH Air Conditioning, On/Off CONTACTOR	INTERRUTTORE INTERRUPTOR	CONTACTEUR SCHAKELAAR	SCHALTER KONTAKT	075I
15		302118A1		1	COVER TAPADERA	COPERCHIO COBERTA	COUVERCLE DEKSEL	DECKEL DÆKSEL	265C
16		92115C2		1	SWITCH Front Wiper CONTACTOR	INTERRUTTORE INTERRUPTOR	CONTACTEUR SCHAKELAAR	SCHALTER KONTAKT	075I
17		1331046C2		3	KNOB POMO	POMELLO BOTAO	POMMEAU KNOP	KNOPF KNAP	150P
18		86989939		1	SWITCH, WINDSHIELD WIPER Rear Wiper INTERRUPT.LIMPIAPAR	INTERRUTT.,TERGICRIS INTERRUPTOR	COMM. ESSUIE-GLACE SCHAKELAAR, RUITENW	SCHEIBENWISCHERSCH VISKERKONTAKT	229S
19		280627A1		1	SWITCH Mirror CONTACTOR	INTERRUTTORE INTERRUPTOR	CONTACTEUR SCHAKELAAR	SCHALTER KONTAKT	075I
20		280628A1		1	PLUG TAPÓN	TAPPO BUJÃO	BOUCHON PLUG	STOPFEN PROP	050T

CONTROLS - RIGHT FENDER CONSOLE, WITH ATC
COMANDI - QUADRO PARAFANGO DESTRO, CON COMANDI AUTOMATICI DELLA CABINA
COMMANDES DE LA CONSOLE DE GARDE-BOUE DROITE, AVEC ATC
BEDIENELEMENTE – RECHTE KOTFLÜGEL-BEDIENKONSOLE MIT AUTOMATISCHER TEMPERRATURREGELUNG

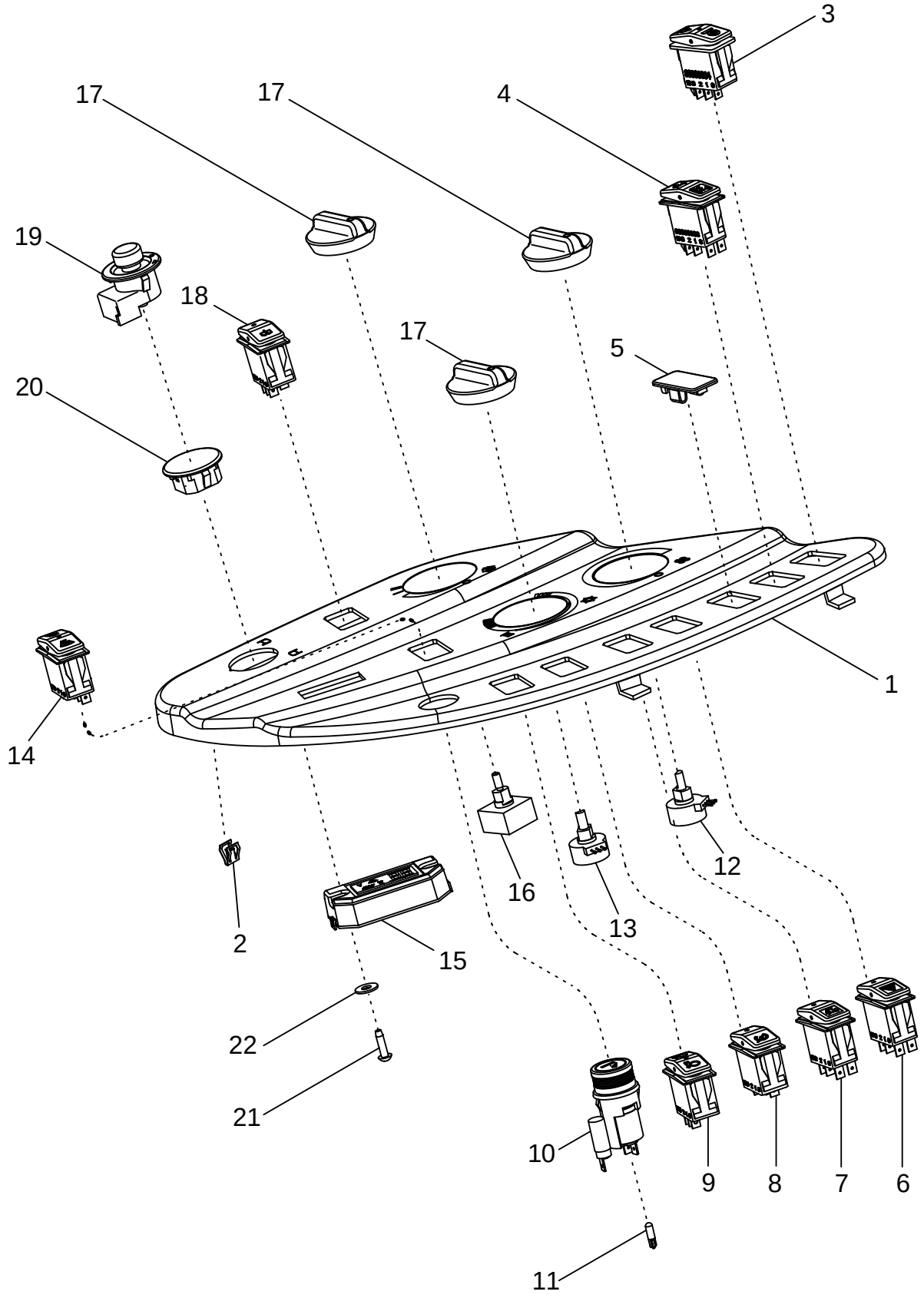

CONTROLES - CONSOLA DEL GUARDABARROS DERECHO, CON ATC
CONTROLOS - CONSOLA DO GUARDA-LAMAS DIREITO, COM ATC
BEDIENINGSORGANEN - RECHTER SPATBORDPANEEL, MET ATC
BETJENINGSGREB - HØJRE SKÆRMKONSOL, MED ATC

R	N	P.N.	MOD	Q	Description Denominacion	Descrizione Denominação	Description Beschrijving	Bezeichnung Beskrivelse	L.C.
1		405010A2		1	PANEL CONTRAPANEL	PANNELLO PAINEL	PANNEAU PANEELWERK	TAFEL PANEL	025P
2		278316A2		2	CLIP SUJETADOR	FERMAGLIO FIXADOR	CLIP KLEM	KLAMMER KLIPS	045F
3		86989964		1	SWITCH Ride Control/Hitch Latch CONTACTOR	INTERRUTTORE INTERRUPTOR	CONTACTEUR SCHAKELAAR	SCHALTER KONTAKT	075I
4		86989938		1	SWITCH Suspended Axle CONTACTOR	INTERRUTTORE INTERRUPTOR	CONTACTEUR SCHAKELAAR	SCHALTER KONTAKT	075I
5		406324A2		AR	PLUG TAPÓN	TAPPO BUJÃO	BOUCHON PLUG	STOPFEN PROP	050T
6		86989962		1	SWITCH, FLASHER Hazard INTERR. LAMPARA INTE	INTERRUTTORE LAMPE INTERRUPTOR	COMM. CLIGNOTANT SCHAKELAAR,RICHTING	SCHALTER, BLINKLICHT KONTAKT,BLINKLYS	260S
7		86989941		1	SWITCH, LIGHTS Becon/Strobe Light INTERRUPTOR	INTERRUTTORE, LUCI INTERRUPTOR	COMM. LUMIERES SCHAKELAAR, LICHTEN	LICHTSCHALTER (MZ) LYSKONTAKT	228S
8		86989955		1	SWITCH Cruise Control, On/Off CONTACTOR	INTERRUTTORE INTERRUPTOR	CONTACTEUR SCHAKELAAR	SCHALTER KONTAKT	075I
9		86989953		1	SWITCH Cruise Control, Increase/Decrease CONTACTOR	INTERRUTTORE INTERRUPTOR	CONTACTEUR SCHAKELAAR	SCHALTER KONTAKT	075I
10		432239A1		1	LIGHTER, CIGARETTE Inc. 11 ENCENDEDOR DE CIGA	ACCENDISIGARI ISQUEIRO	ALLUME-CIGARE SIGARENAANSTEKER	ZIGARRETTENANZÜNDE CIGARETTAENDER	005A
11		437324A1		1	BULB BOMBILLA	LAMPADA LAMPADA	AMPOULE LAMP	GLÜHBIRNE PÆRE	030L
12		326281A1		11	POTENTIOMETER Blower Motor POTENCIOMETRO	POTENZIOMETRO POTENCIOMETRO	POTENTIOMETRE POTENTIOMETER	POTENTIOMETER POTENTIOMETER	550P
13		326282A1		1	POTENTIOMETER Cab Temperature POTENCIOMETRO	POTENZIOMETRO POTENCIOMETRO	POTENTIOMETRE POTENTIOMETER	POTENTIOMETER POTENTIOMETER	550P
14		86989940		1	SWITCH Climate Control CONTACTOR	INTERRUTTORE INTERRUPTOR	CONTACTEUR SCHAKELAAR	SCHALTER KONTAKT	075I
15		308910A2		1	DISPLAY MATERIAL MATERIAL EXPOSICION	MATERIALE PER ESPOS MAT. EXPOSICAO	MATERIEL POUR EXPOS PRESENTATIE MATERIA	PROSPEKTSTAENDER FREMVISNINGS MATERI	021M
16		92115C2		1	SWITCH Front Wiper CONTACTOR	INTERRUTTORE INTERRUPTOR	CONTACTEUR SCHAKELAAR	SCHALTER KONTAKT	075I
17		1331046C2		3	KNOB POMO	POMELLO BOTAO	POMMEAU KNOP	KNOPF KNAP	150P
18		86989939		1	SWITCH, WINDSHIELD WIPER Rear Wiper INTERRUPT.LIMPIAPAR/	INTERRUTT.,TERGICRIS INTERRUPTOR	COMM. ESSUIE-GLACE SCHAKELAAR, RUITENW	SCHEIBENWISCHERSCH VISKERKONTAKT	229S
19		280627A1		1	SWITCH Mirror CONTACTOR	INTERRUTTORE INTERRUPTOR	CONTACTEUR SCHAKELAAR	SCHALTER KONTAKT	075I
20		280628A1		1	PLUG TAPÓN	TAPPO BUJÃO	BOUCHON PLUG	STOPFEN PROP	050T

CONTROLS - RIGHT FENDER CONSOLE, WITH ATC
COMANDI - QUADRO PARAFANGO DESTRO, CON COMANDI AUTOMATICI DELLA CABINA
COMMANDES DE LA CONSOLE DE GARDE-BOUE DROITE, AVEC ATC
BEDIENELEMENTE – RECHTE KOTFLÜGEL-BEDIENKONSOLE MIT AUTOMATISCHER TEMPERRATURREGELUNG

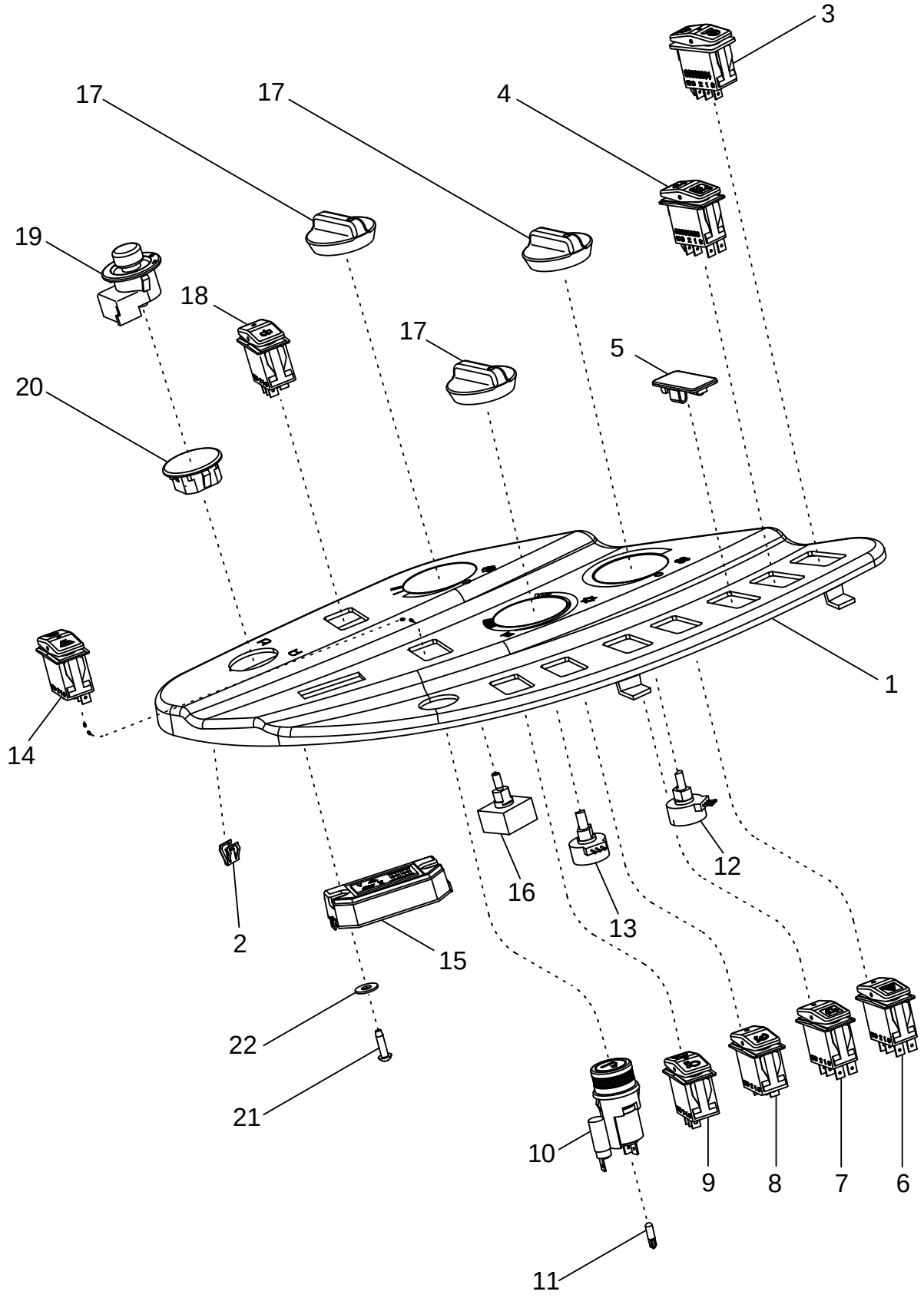

CONTROLES - CONSOLA DEL GUARDABARROS DERECHO, CON ATC
CONTROLOS - CONSOLA DO GUARDA-LAMAS DIREITO, COM ATC
BEDIENINGSORGANEN - RECHTER SPATBORDPANEEL, MET ATC
BETJENINGSGREB - HØJRE SKÆRMKONSOL, MED ATC

R	N	P.N.	MOD	Q	Description Denominacion	Descrizione Denominação	Description Beschrijving	Bezeichnung Beskrivelse	L.C.
21		261-14512		2	SCREW No. 10 st x 3/4 TORNILLO	VITE PARAFUSO	VIS SCHROEF	SCHRAUBE SKRUE	7450
22		495-31027		2	WASHER 17/64 x 5/8 x 3/64 ARANDELA	ROSETTA PIANA ANILHA	RONDELLE SLUITRING	SCHEIBE FLADSKIVE	9720

ALTERNATOR - MOUNTING
ALTERNATORE - SUPPORTO
MONTAGE DE L'ALTERNATEUR
LICHTMASCHINENBEFESTIGUNG

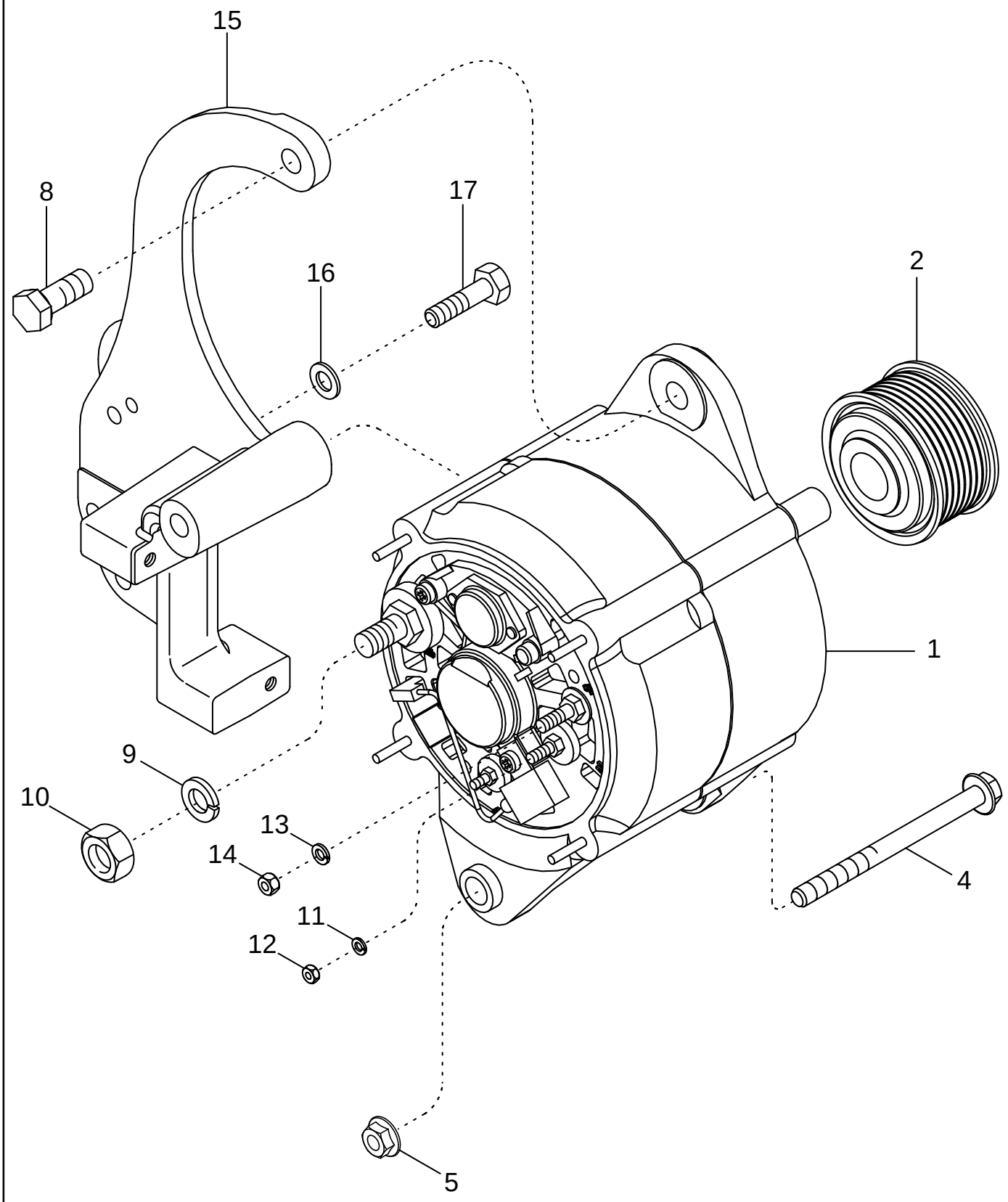

ALTERNADOR - MONTAJE
MONTAGEM DO ALTERNADOR
DYNAMO - BEVESTIGING
GENERATOR - MONTERING

R	N	P.N.	MOD	Q	Description Denominacion	Descrizione Denominação	Description Beschrijving	Bezeichnung Beskrivelse	L.C.
1	1	125849A1		1	ALTERNATOR 135 amp ALTERNADOR	ALTERNATORE ALTERNADOR	ALTERNATEUR ALTERNATOR	DREHSTROMGENERATO VEKSELSTRØMSGENER	025A
2		86975356		1	PULLEY POLEA	PULEGGIA POLIE	POULIE RIEMSCHIJF	RIEMENSCHEIBE REMSKIVE	230P
4		844-12150		1	BOLT M12 x 150; 8.8 TORNILLO	BULLONE PARAFUSO	BOULON BOUT	SCHAUBENBOLZEN SKRUE	0810
5		9804279		1	NUT M12 TUERCA	DADO PORCA	ECROU MOER	MUTTER MØTRIK	010D
8		426-820		1	SCREW 1/2 x 1-1/4; 8 TORNILLO	VITE PARAFUSO	VIS SCHROEF	SCHRAUBE SKRUE	P136
9		492-11044		1	WASHER, LOCK 7/16 ARANDELA DE FRENO	ROSETTA DI SICUREZZA ANILHA DE FIXACAO	RONDELLE FREIN VEERRING	SPRENGRING LAASESKIVE	132R
10		425-147		1	NUT 7/16 TUERCA	DADO PORCA	ECROU MOER	MUTTER MØTRIK	5780
11		892-11004		1	WASHER M4 ARANDELA	ROSETTA PIANA ANILHA	RONDELLE SLUITRING	SCHEIBE FLADSKIVE	9720
12		825-1404		1	NUT M4 TUERCA	DADO PORCA	ECROU MOER	MUTTER MØTRIK	5780
13		892-11005		1	WASHER, LOCK M5 ARANDELA DE FRENO	ROSETTA DI SICUREZZA ANILHA DE FIXACAO	RONDELLE FREIN VEERRING	SPRENGRING LAASESKIVE	132R
14		824-1405		1	NUT M5; 5 TUERCA	DADO PORCA	ECROU MOER	MUTTER MØTRIK	5780
15		394717A4		1	SUPPORT SOPORTE	SUPPORTO SUPORTE	SUPPORT STEUN	STÜTZE BESLAG	300S
16		895-11010		3	WASHER 11 x 20 x 2 mm ARANDELA	ROSETTA PIANA ANILHA	RONDELLE SLUITRING	SCHEIBE FLADSKIVE	9720
17		628-10030		3	SCREW M10 x 30; 10.9 TORNILLO	VITE PARAFUSO	VIS SCHROEF	SCHRAUBE SKRUE	7450

(1) See Figure 04-18

ALTERNATOR ASSEMBLY - 135 AMPERE
GRUPPO DELL'ALTERNATORE - 135 AMPERE
ALTERNATEUR - 135 A
LICHTMASCHINE - 135 A

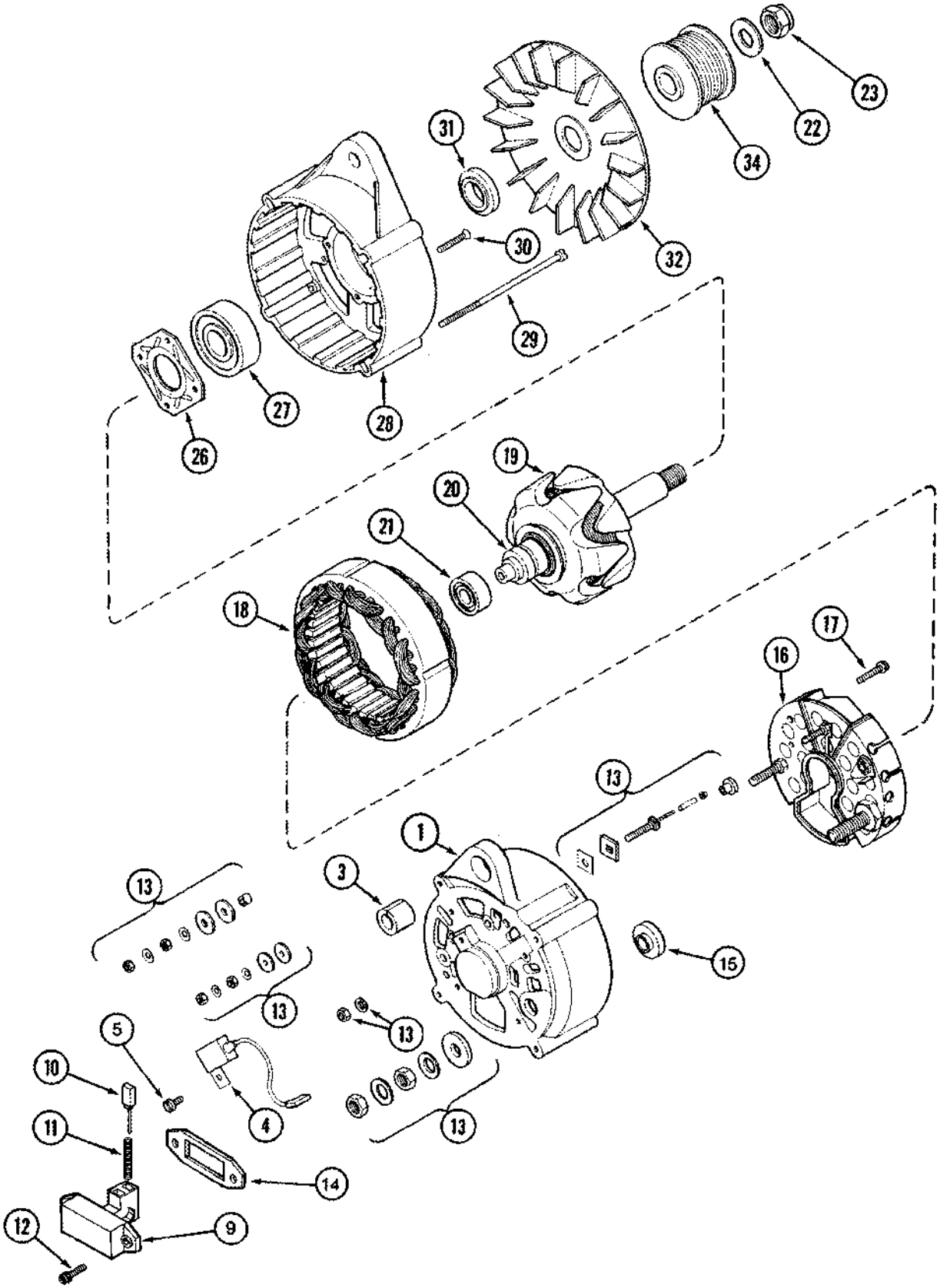

MONTAJE DEL ALTERNADOR - 135 AMPERIOS
CONJUNTO DO ALTERNADOR - 135 A
DYNAMO - 135 AMPÈRE
GENERATORSAMLING - 135 AMPERE

R	N	P.N.	MOD	Q	Description Denominacion	Descrizione Denominação	Description Beschrijving	Bezeichnung Beskrivelse	L.C.
		125849A1		1	ALTERNATOR 135 amp, Inc. 1 - 32				
						ALTERNATORE	ALTERNATEUR	DREHSTROMGENERATC	025A
					ALTERNADOR	ALTERNADOR	ALTERNATOR	VEKSELSTRØMSGENER	
1		1964731C1		1	HOUSING	ALLOGGIAMENTO	CARTER	GEHÄUSE	014V
					CAVIDAD	ALOJAMENTO	HUIS	HUS	
3		1964737C1		1	BUSHING	BOCCOLA	BAGUE	BUECHSE	095B
					CASQUILLO	CASQUILHO	LAGERBUS	BOESNING	
4		3079389R1		1	CAPACITOR	CONDENSATORE	CONDENSATEUR	KONDENSATOR, ELEKTI	1383
					CAPACITADOR	CONDENSADOR	CAPACITOR	KONDENSATOR	
5		840-1510		1	SCREW M5 x 10	VITE	VIS	SCHRAUBE	7450
					TORNILLO	PARAFUSO	SCHROEF	SKRUE	
9		1964733C1		1	REGULATOR	REGOLATORE	REGULATEUR	REGULATOR	6795
					REGULADOR	REGULADOR	REGULATOR	REGULATOR	
10		1964968C1		1	BRUSH	SPAZZOLA	BALAI	KOHLEBÜRSTE	177S
					ESCOBILLA	ESCOVA	BORSTEL	KULBØRSTE (DYNAMO)	
11		1964734C1		2	SPRING	MOLLA	RESSORT	FEDER	100M
					RESORTE	MOLA	VEER	FJEDER	
12		A187504		2	SCREW	VITE	VIS	SCHRAUBE	040V
					TORNILLO	PARAFUSO	SCHROEF	SKRUE	
13		1964738C1		1	PACKAGE, REPAIR	CONFEZIONE, FRENI	COLIS DE REPARATION	REPARATURPACKUNG	P704
					JEUGO REPARACION	JOGO DE REPARO	PACKAGE, REPAIR	PACKAGE, REPAIR	
14		140546A1		1	GASKET	GUARNIZIONE	JOINT	DICHTUNG, FLACH	123G
					JUNTA HERMETICA	JUNTA	DICHTINGSSTUK	PAKNING	
15		140545A1		1	BUSHING	BOCCOLA	BAGUE	BUECHSE	095B
					CASQUILLO	CASQUILHO	LAGERBUS	BOESNING	
16		1964732C1		1	RECTIFIER	RADDRIZZATORE	REDRESSEUR	GLEICHRICHTER	032R
					RECTIFICADOR	RECTIFICADOR	GELIJKRICHTER	ENSRETTER	
17		A186194		2	SCREW	VITE	VIS	SCHRAUBE	040V
					TORNILLO	PARAFUSO	SCHROEF	SKRUE	
18		140548A1		1	STATOR	STATORE	STATOR	STATOR	8480
					ESTATOR	ESTATOR	CHASSIS	STATOR	
19		1964728C1		1	ROTOR	ROTORE	ROTOR	ROTOR	145R
					ROTOR	ROTOR	DRAAIWIEK	ROTOR	
20		140543A1		1	RING	ANELLO	ANNEAU	RING	045A
					ANILLO	ANEL	RING	RING	
21		1964730C1		1	BEARING, BALL	CUSCINETTO A SFERA	ROULEMENT A BILLES	KUGELLAGER	343C
					RODAMIENTO DE BOLAS	ROLAMENTO	LAGER, KOGEL	KUGLELEJE	
22		495-21063		1	WASHER 5/8 x 1-15/32 x 7/64				
						ROSETTA PIANA	RONDELLE	SCHEIBE	9720
					ARANDELA	ANILHA	SLUITRING	FLADSKIVE	
23		131-56		1	NUT 5/8 NF	DADO	ECROU	MUTTER	5780
					TUERCA	PORCA	MOER	MØTRIK	
26		1964727C1		1	PLATE	PIASTRA	PLAQUE	PLATTE	105P
					PLACA	CHAPA	PLAAT	PLADE	
27		1964726C1		1	BEARING, BALL	CUSCINETTO A SFERA	ROULEMENT A BILLES	KUGELLAGER	343C
					RODAMIENTO DE BOLAS	ROLAMENTO	LAGER, KOGEL	KUGLELEJE	
28		1964725C1		1	HOUSING	ALLOGGIAMENTO	CARTER	GEHÄUSE	014V
					CAVIDAD	ALOJAMENTO	HUIS	HUS	

ALTERNATOR ASSEMBLY - 135 AMPERE
GRUPPO DELL'ALTERNATORE - 135 AMPERE
ALTERNATEUR - 135 A
LICHTMASCHINE - 135 A

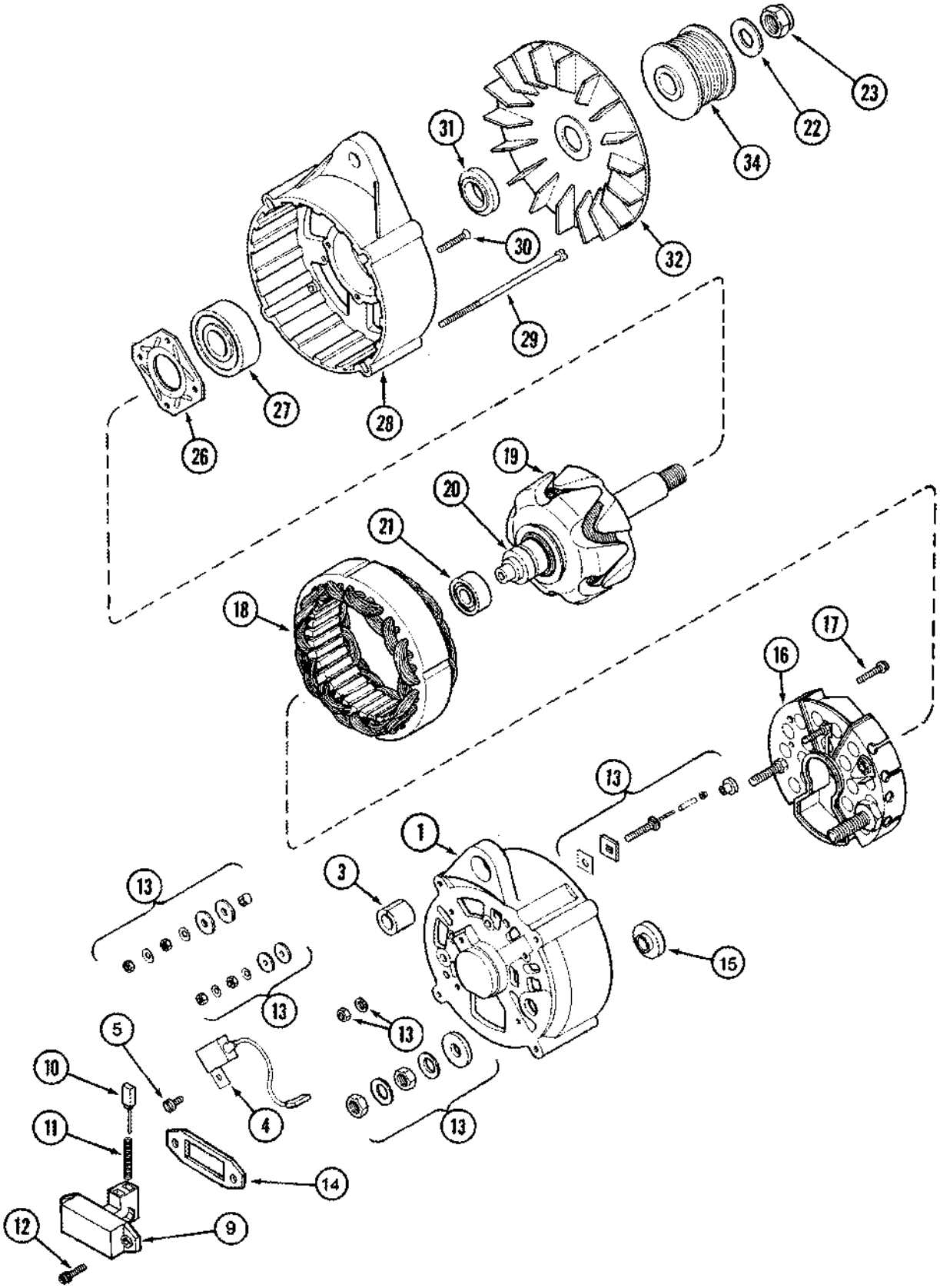

MONTAJE DEL ALTERNADOR - 135 AMPERIOS
CONJUNTO DO ALTERNADOR - 135 A
DYNAMO - 135 AMPÈRE
GENERATORSAMLING - 135 AMPERE

R	N	P.N.	MOD	Q	Description Denominacion	Descrizione Denominação	Description Beschrijving	Bezeichnung Beskrivelse	L.C.
29		140549A1		4	SCREW TORNILLO	VITE PARAFUSO	VIS SCHROEF	SCHRAUBE SKRUE	040V
30		140541A1		4	SCREW TORNILLO	VITE PARAFUSO	VIS SCHROEF	SCHRAUBE SKRUE	040V
31		1964729C1		1	SPACER SEPARADOR	DISTANZIALE ESPACADOR	ENTRETOISE AFSTANDSRING	DISTANZSTÜCK AFSTANDSSTYKKE	075D
32		1964736C1		1	FAN VENTILADOR	VENTILATORE VENTOINHA	VENTILATEUR VENTILATOR	GEBLÄSE VENTILATOR	030V
34		86975356		1	PULLEY POLEA	PULEGGIA POLIE	POULIE RIEMSCHIJF	RIEMENSCHEIBE REMSKIVE	230P

STARTER - MOUNTING
MOTORINO D'AVVIAMENTO - SUPPORTO
MONTAGE DU DÉMARREUR
ANLASSERBEFESTIGUNG

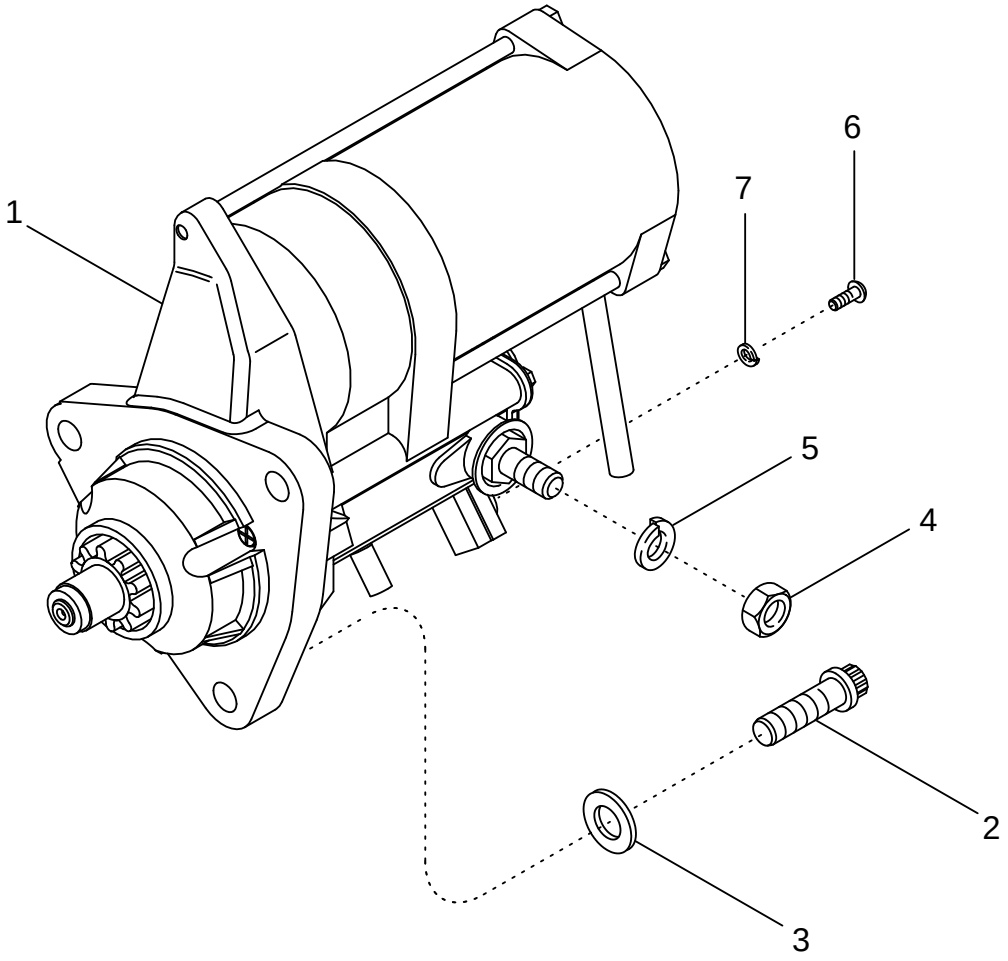

ARRANQUE - MONTAJE
MONTAGEM DO MOTOR DE ARRANQUE
STARTMOTOR - BEVESTIGING
STARTER - OPHÆNG

R	N	P.N.	MOD	Q	Description Denominacion	Descrizione Denominação	Description Beschrijving	Bezeichnung Beskrivelse	L.C.
1	1	193432A2		1	MOTOR MOTOR	MOTORE MOTOR	MOTEUR MOTOR	MOTOR MOTOR	Z560
2		868-12040		3	SCREW 12 Point, M12 x 40; 12.9 TORNILLO	VITE PARAFUSO	VIS SCHROEF	SCHRAUBE SKRUE	7450
3		896-11012		3	WASHER 13.5 x 24 x 3 mm ARANDELA	ROSETTA PIANA ANILHA	RONDELLE SLUITRING	SCHEIBE FLADSKIVE	9720
4		829-1412		1	NUT M12; 10 TUERCA	DADO PORCA	ECROU MOER	MUTTER MØTRIK	5780
5		892-11012		1	WASHER, LOCK M12 ARANDELA DE FRENO	ROSETTA DI SICUREZZA ANILHA DE FIXACAO	RONDELLE FREIN VEERRING	SPRENGRING LAASESKIVE	132R
6		258820A1		1	SCREW M5 x 8 TORNILLO	VITE PARAFUSO	VIS SCHROEF	SCHRAUBE SKRUE	040V
7		892-11005		1	WASHER, LOCK M5 ARANDELA DE FRENO	ROSETTA DI SICUREZZA ANILHA DE FIXACAO	RONDELLE FREIN VEERRING	SPRENGRING LAASESKIVE	132R

(1) See Figure 04-20

STARTER ASSEMBLY
GRUPPO DEL MOTORINO DI AVVIAMENTO
DÉMARREUR
ANLASSER

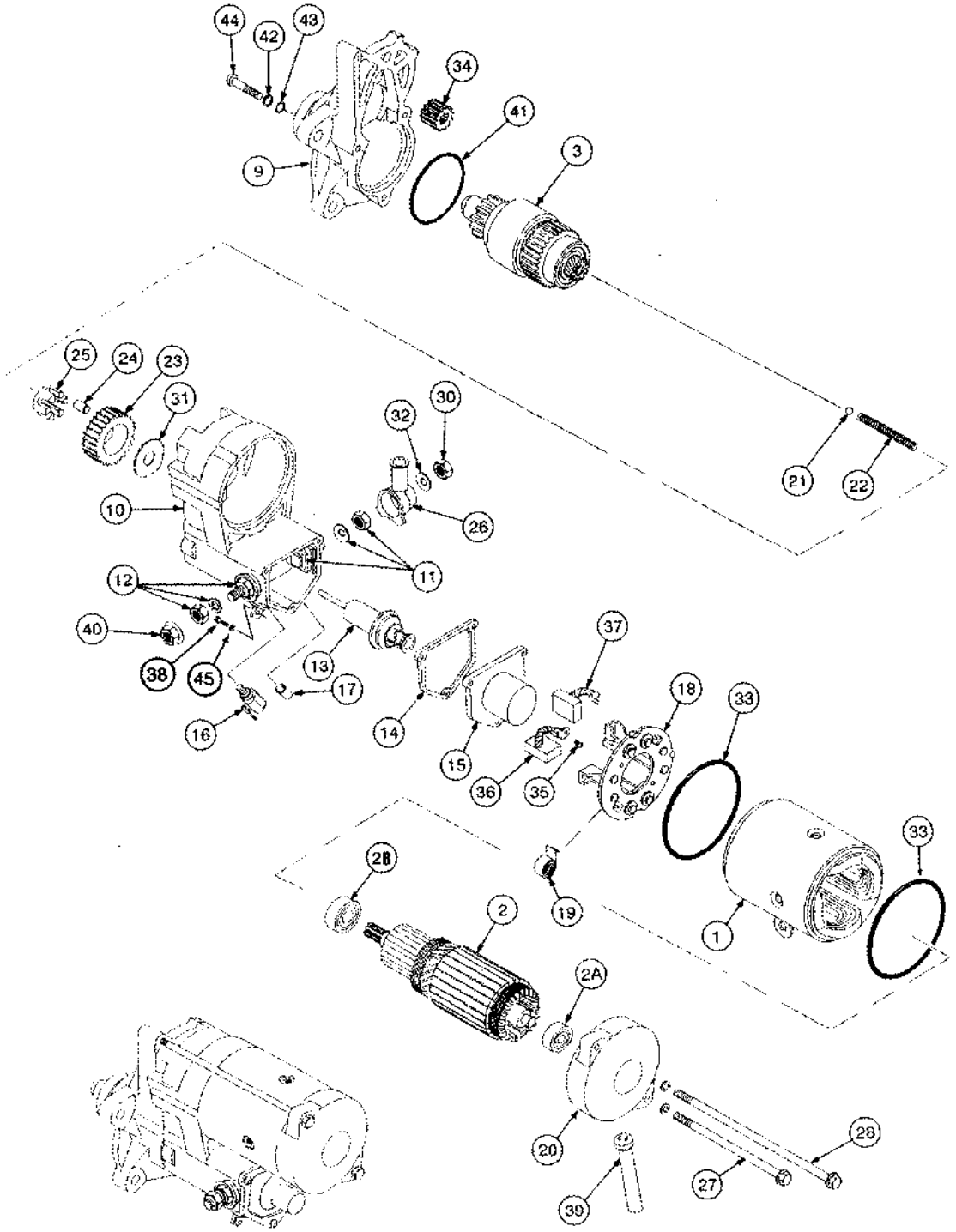

CONJUNTO DEL MOTOR DE ARRANQUE
CONJUNTO DO MOTOR DE ARRANQUE
STARTMOTOR
STARTERSAMLING

R	N	P.N.	MOD	Q	Description Denominacion	Descrizione Denominação	Description Beschrijving	Bezeichnung Beskrivelse	L.C.
		193432A2		1	MOTOR Inc. 1 - 45	MOTORE	MOTEUR	MOTOR	Z560
					MOTOR	MOTOR	MOTOR	MOTOR	
1		258884A1		1	YOKE	FORCELLA	MACHOIRE	GABEL	085F
					HORQUILLA	GARFO	VORK	KRAFTOVERFOERINGSC	
2		258885A1		1	ARMATURE Inc. 2A, 2B	INDOTTO	INDUIT	ANKER, ELEKTRISCH	040I
					INDUCIDO	INDUZIDO	ARMATUUR	DYNAMOANKER	
2B		452698C1		1	BEARING	CUSCINETTO	ROULEMENT	LAGER	0600
					COJINETE	ROLAMENTO	BEARING	BEARING	
2C		298254A1		1	BEARING, BALL 15 x 35 x 11 mm				
						CUSCINETTO A SFERA	ROULEMENT A BILLES	KUGELLAGER	343C
					RODAMIENTO DE BOLAS	ROLAMENTO	LAGER, KOGEL	KUGLELEJE	
3		258840A1		1	CLUTCH ASSEMBLY	INNESTO, COMPLESSIV	EMBRAYAGE ASSEMBLE	KUPPLUNG (KPLT.)	P566
					EMBRAGUE (CONJUNTC	EMBREAGEM CONJUNT	CLUTCH ASSEMBLY	CLUTCH ASSEMBLY	
9		258841A1		1	HOUSING	ALLOGGIAMENTO	CARTER	GEHÄUSE	014V
					CAVIDAD	ALOJAMENTO	HUIS	HUS	
		258886A1		1	SWITCH, SOLENOID Inc. 10 - 17				
						COMMUT.,SOLENOIDE	CONTACTEUR SOLÉNOÏ	MAGNETSCHALTER	P667
					ELECTROIMAN	INTERRUPTOR SOLENO	SWITCH, SOLENOID	SOLENOIDAFBRYDER	
10		NSS		1	NOT SERVICED SEPARATELY Housing				
						NON FORNITO SEPARAT	NON FOURNI SEPAREMI	KEIN ERSATZTEIL	064N
					NO SE REPARA SEPARA	NOT SERVICED SEPARA	NIET ALLEEN VERKRIJG	NOT SERVICED SEPARA	
11		258871A1		1	KIT, SERVICE Terminal	KIT ASSISTENZIALE	KIT ASSISTANCE	WARTUNGSSATZ	021K
					KIT, SERVICE	KIT, SERVICE	KIT, SERVICE	SERVICE SAET	
12		258869A1		1	KIT, SERVICE Terminal	KIT ASSISTENZIALE	KIT ASSISTANCE	WARTUNGSSATZ	021K
					KIT, SERVICE	KIT, SERVICE	KIT, SERVICE	SERVICE SAET	
13		258874A1		1	PLUNGER	STANTUFFO	PLONGEUR	KOLBENSTEMPEL	130P
					EMBOLO	EMBOLO	ZUIGER	STEMPEL	
14		NSS		1	NOT SERVICED SEPARATELY Gasket, Cover				
						NON FORNITO SEPARAT	NON FOURNI SEPAREMI	KEIN ERSATZTEIL	064N
					NO SE REPARA SEPARA	NOT SERVICED SEPARA	NIET ALLEEN VERKRIJG	NOT SERVICED SEPARA	
15		NSS		1	NOT SERVICED SEPARATELY Cover				
						NON FORNITO SEPARAT	NON FOURNI SEPAREMI	KEIN ERSATZTEIL	064N
					NO SE REPARA SEPARA	NOT SERVICED SEPARA	NIET ALLEEN VERKRIJG	NOT SERVICED SEPARA	
16		258877A1		1	TERMINAL CONNECTOR Solenoid				
						TERMINALE	COSSE	KABELKLEMME	9060
					TERMINAL	TERMINAL	TERMINAL CONNECTOR	TERMINALSTIK	
17		141353A1		1	BUSHING	BOCCOLA	BAGUE	BUECHSE	095B
					CASQUILLO	CASQUILHO	LAGERBUS	BOESNING	
18		A49806		1	BRUSH HOLDER Inc. 19	PORTASPAZZOLA	PORTE-BALAI	BÜRSTENHALTER	197P
					PORTAESCOBILLA	PORTA-ESCOVAS	BORSTELHOUDER	BOERSTEHOLDER	
19		NSS		4	NOT SERVICED SEPARATELY Spring				
						NON FORNITO SEPARAT	NON FOURNI SEPAREMI	KEIN ERSATZTEIL	064N
					NO SE REPARA SEPARA	NOT SERVICED SEPARA	NIET ALLEEN VERKRIJG	NOT SERVICED SEPARA	
20		258880A1		1	FRAME	INTELAIATURA	CHASSIS	RAHMENGESTELL	072I
					ESTRUCTURA	CHASSIS	KADER	CHASSIS	
21		211-1311		1	BALL 11/32; 200,CRS	SFERA	BILLE	KUGEL	0460
					BOLA	ESFERA	KOGEL	KUGLE	
22		A47232		1	SPRING 2-13/16	MOLLA	RESSORT	FEDER	100M
					RESORTE	MOLA	VEER	FJEDER	

STARTER ASSEMBLY
GRUPPO DEL MOTORINO DI AVVIAMENTO
DÉMARREUR
ANLASSER

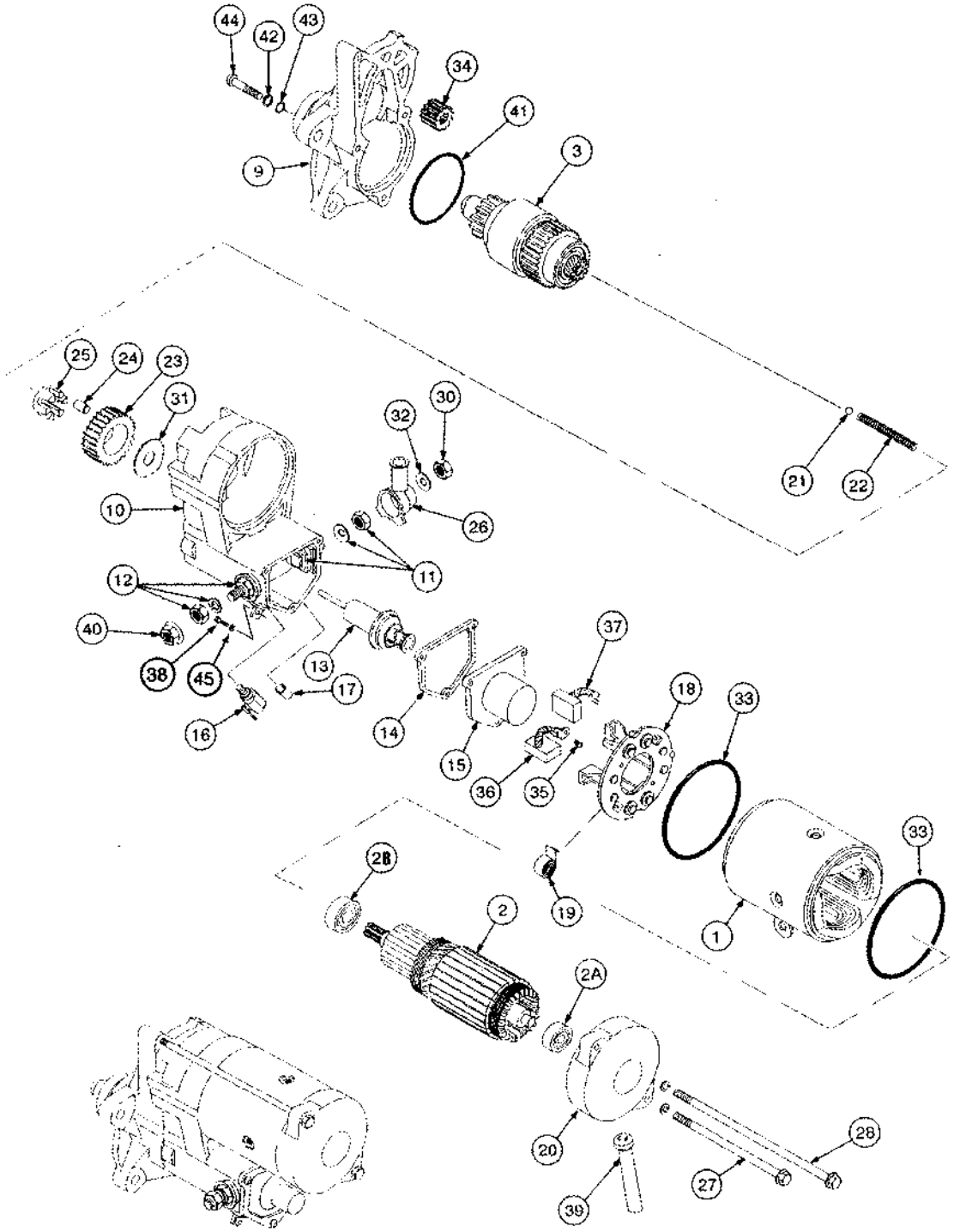

CONJUNTO DEL MOTOR DE ARRANQUE
CONJUNTO DO MOTOR DE ARRANQUE
STARTMOTOR
STARTERSAMLING

R	N	P.N.	MOD	Q	Description Denominacion	Descrizione Denominação	Description Beschrijving	Bezeichnung Beskrivelse	L.C.
23		A49810		1	GEAR ENGRANAJE	INGRANAGGIO CARRETO	PIGNON TANDWIEL	ZAHNRAD TANDHJUL	050I
24		A47235		5	ROLLER RODILLO	RULLO ROLETE	ROULEAU ROL	WALZE VALSE	500R
25		A47236		1	RETAINER RETENEDOR	RITEGNO RETENTOR	RETENEUR HOUDER	HALTEVORRICHTUNG HOLDER	109R
26		A49805		1	COVER TAPADERA	COPERCHIO COBERTA	COUVERCLE DEKSEL	DECKEL DÆKSEL	265C
27		104594A1		1	BOLT 7 x 144 mm TORNILLO	BULLONE PARAFUSO	BOULON BOUT	SCHAUBENBOLZEN SKRUE	140B
28		104593A1		1	BOLT 7 x 206 mm TORNILLO	BULLONE PARAFUSO	BOULON BOUT	SCHAUBENBOLZEN SKRUE	140B
30		829-1412		1	NUT M12; 10 TUERCA	DADO PORCA	ECROU MOER	MUTTER MØTRIK	5780
31		141360A1		1	RETAINER RETENEDOR	RITEGNO RETENTOR	RETENEUR HOUDER	HALTEVORRICHTUNG HOLDER	109R
32		892-11012		1	WASHER, LOCK M12 ARANDELA DE FRENO	ROSETTA DI SICUREZZA ANILHA DE FIXACAO	RONDELLE FREIN VEERRING	SPRENGRING LAASESKIVE	132R
33		298253A1		2	RIM RIN	CERCHIONE JANTE	JANTE WIELVEL	FELGE RIFLE	135C
34		A49809		1	PINION PINON	PIGNONE PINHAO	PIGNON PINION	RITZEL PINION	P045
35		141361A1		4	SCREW TORNILLO	VITE PARAFUSO	VIS SCHROEF	SCHRAUBE SKRUE	040V
36		A49807		2	BRUSH ESCOBILLA	SPAZZOLA ESCOVA	BALAI BORSTEL	KOHLEBÜRSTE KULBØRSTE (DYNAMO)	177S
37		A49808		2	BRUSH ESCOBILLA	SPAZZOLA ESCOVA	BALAI BORSTEL	KOHLEBÜRSTE KULBØRSTE (DYNAMO)	177S
38		258820A1		1	SCREW M5 x 8 TORNILLO	VITE PARAFUSO	VIS SCHROEF	SCHRAUBE SKRUE	040V
39		258883A1		1	BUSHING CASQUILLO	BOCCOLA CASQUILHO	BAGUE LAGERBUS	BUECHSE BOESNING	095B
40		829-1412		1	NUT M12; 10 TUERCA	DADO PORCA	ECROU MOER	MUTTER MØTRIK	5780
41		1546500C1		1	O-RING JUNTA HERMETICA	ANELLO TOROIDALE O-RING	JOINT THORIQUE O-RING	DICHTRING O-RING	055A
		A47230		3	BOLT Inc. 42 - 44 TORNILLO	BULLONE PARAFUSO	BOULON BOUT	SCHAUBENBOLZEN SKRUE	140B
42		495-81252		3	WASHER 1/4 x 9/16 x 1/16 ARANDELA	ROSETTA PIANA ANILHA	RONDELLE SLUITRING	SCHEIBE FLADSKIVE	9720
43		A47130		3	O-RING JUNTA HERMETICA	ANELLO TOROIDALE O-RING	JOINT THORIQUE O-RING	DICHTRING O-RING	055A
44		NSS		3	NOT SERVICED SEPARATELY Bolt NO SE REPARA SEPARA	NON FORNITO SEPARAT NOT SERVICED SEPARA	NON FOURNI SEPAREMI NIET ALLEEN VERKRIJG	KEIN ERSATZTEIL NOT SERVICED SEPARA	064N

04-21		p1	12/02

SOLENOID - STARTER
SOLENOIDE - MOTORINO DI AVVIAMENTO
SOLÉNOÏDE DU DÉMARREUR
ANLASSER-MAGNETSCHALTER

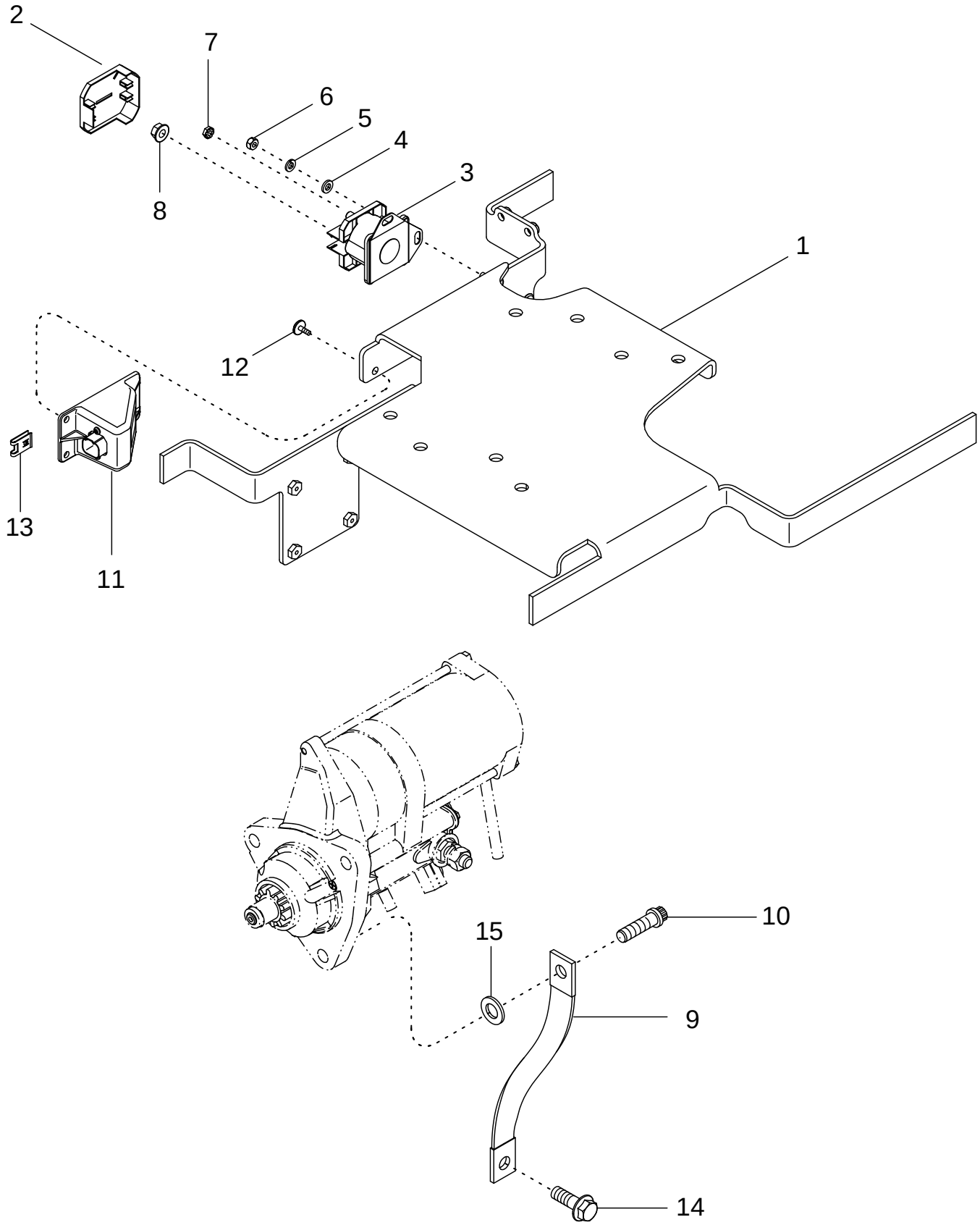

SOLENOIDE - ARRANQUE
SOLENÓIDE DO MOTOR DE ARRANQUE
SOLENOÏDE - STARTMOTOR
SOLENOIDE - STARTER

R	N	P.N.	MOD	Q	Description Denominacion	Descrizione Denominação	Description Beschrijving	Bezeichnung Beskrivelse	L.C.
1	1	REF		1	INSTRUCTION Support, Air Cleaner Assy				
						ISTRUZIONI	NOTICE	HINWEIS	Z571
					MANUAL	INSTRUCAO	INSTRUCTION	SKO, INDRE	
2		178148A1		1	COVER	COPERCHIO	COUVERCLE	DECKEL	265C
					TAPADERA	COBERTA	DEKSEL	DÆKSEL	
3		183038A1		1	SOLENOID Switch, Order 178149A1				
						SOLENOIDE	SOLENOIDE	MAGNETSPULE, MECH.	168S
					SOLENOIDE	SOLEMOID	SOLENOIDE	MAGNETVENTIL	
4		896-11006		2	WASHER 6,6 x 12,5 x 2 mm	ROSETTA PIANA	RONDELLE	BEILAGSCHEIBE	131R
					ARANDELA	ANILHA	SLUITRING	FLADSKIVE	
5		892-11006		2	WASHER, LOCK M6	ROSETTA DI SICUREZZA	RONDELLE FREIN	SPRENGRING	132R
					ARANDELA DE FRENO	ANILHA DE FIXACAO	VEERRING	LAASESKIVE	
6		829-1406		2	NUT M6; 10.9	DADO	ECROU	MUTTER	010D
					TUERCA	PORCA	MOER	MØTRIK	
7		193-1000		1	NUT No. 10 NF	DADO	ECROU	MUTTER	5780
					TUERCA	PORCA	MOER	MØTRIK	
8		231-5145		2	NUT, LOCK 5/16	CONTRODADO	CONTRE-ECROU	KONTERMUTTER	P263
					CONTRA TUERCA	CONTRA PORCA	NUT, LOCK	NUT, LOCK	
9		257176A3		1	CABLE, BATTERY (NEG)	CAVO DELLA BATTERIA	JARRETIERE	BATTERIEKABEL-NEG	Z221
					ATADURA	CABO BATERIA NEGATIV	CABLE, BATTERY (NEG)	CABLE, BATTERY (NEG)	
10		854-12035		1	SCREW M12 x 35; 10.9	VITE	VIS	SCHRAUBE	7450
					TORNILLO	PARAFUSO	SCHROEF	SKRUE	
11		397496A1		1	CONNECTOR Passive Terminator				
						CONNESSIONE	CONNECTEUR	STECKVERBINDUNG ELI	235C
					CONECTOR	CONECTOR	VERBINDING	STIK	
12		1975782C1		2	SCREW No.10 st x 5/8	VITE	VIS	SCHRAUBE	040V
					TORNILLO	PARAFUSO	SCHROEF	SKRUE	
13		131-642		2	NUT No. 10	DADO	ECROU	MUTTER	5780
					TUERCA	PORCA	MOER	MØTRIK	
14		868-12040		1	SCREW 12 Point, M12 x 40; 12.9				
						VITE	VIS	SCHRAUBE	7450
					TORNILLO	PARAFUSO	SCHROEF	SKRUE	
15		896-11012		1	WASHER 13.5 x 24 x 3 mm	ROSETTA PIANA	RONDELLE	SCHEIBE	9720
					ARANDELA	ANILHA	SLUITRING	FLADSKIVE	

(1) See Figure 09-11

04-22		p1	08/04

BATTERY, BATTERY BOX AND CABLES
BATTERIA, VANO BATTERIA E CAVIBATERIA, CAIXA DA BATERIA E CABOS
BATTERIE, COMPARTIMENT BATTERIE ET CÂBLES
BATTERIE, BATTERIEKASTEN UND KABEL

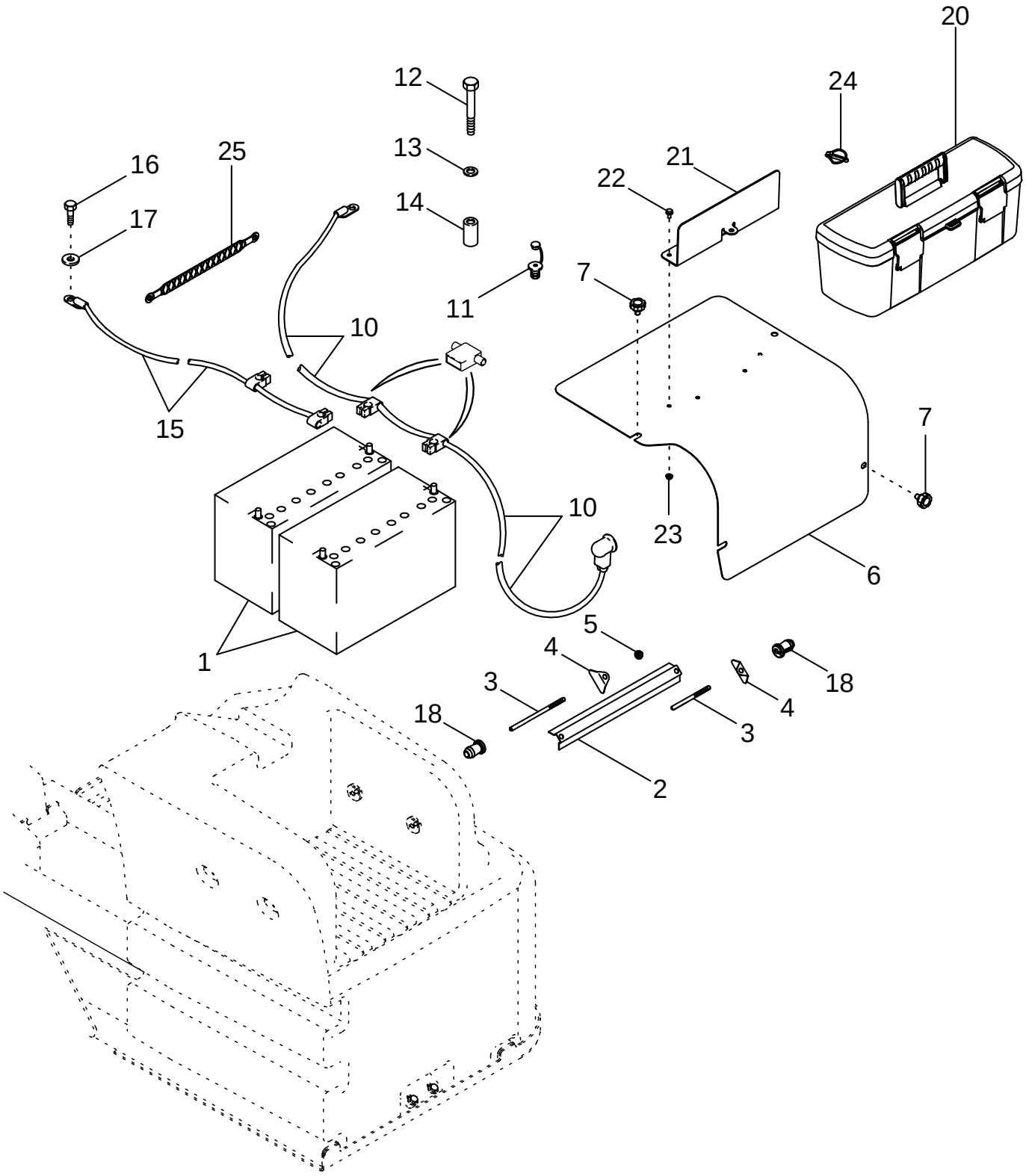

MONTAJE BATERIA
BATERÍA, CABLES Y CAJA DE LA BATERÍA
ACCU, ACCUBAK EN KABELS
BATTERI, BATTERIKASSE OG KABLER

R	N	P.N.	MOD	Q	Description Denominacion	Descrizione Denominação	Description Beschrijving	Bezeichnung Beskrivelse	L.C.
1		BMF31G		2	BATTERY, DRY 12V, Not For UK				
						BATTERIA, SECCA	BATTERIE SÈCHE	BATTERIE, TROCKEN	T003
					BATERIA CARGA SECA	BATERIA T. SECA	DROGE BATTERIJ	BATTERI, TOERLADET	
1		ZKA1000012		2	BATTERY, WET UK Only	BATTERIA, UMIDA	BATTERIE HUMIDE	BATTERIE	T002
					BATERIA CARGA HUMEI	BATERIA T. HUMIDA	NATTE BATTERIJ	BATTERI, VAADLADET	
2		255675A1		2	ANGLE BAR	ANGOLARE	CORNIERE	WINKELSTÜCK	060A
					ANGULAR	BARRA ANGULAR	HOEKIJZER	VINKELSTYKKE	
3		246157A1		4	TRUSS ROD	TIRANTE	TIRANT	SPANNSTANGE	P388
					TIRANTE	TIRANTE	TRUSS ROD	GITTERSTANG	
4		255728A1		4	PLATE, SUPPORT	PIASTRA PORTA TARGA	SUPPORT DE PLAQUE	PLATTE, HALTER	198P
					SOPORTE DE PLACA	SUPORTE DE CHAPA	NUMMERPLAATHOUDEF	PLADEHOLDER	
5		825-5148		4	NUT M8; 8	DADO	ECROU	MUTTER	5780
					TUERCA	PORCA	MOER	MØTRIK	
6		238016A2		1	COVER	COPERCHIO	COUVERCLE	DECKEL	265C
					TAPADERA	COBERTA	DEKSEL	DÆKSEL	
7		394133A1		4	KNOB	POMELLO	POMMEAU	KNOPF	150P
					POMO	BOTAO	KNOP	KNAP	
10		239127A3		1	CABLE ASSY. Positive	CAVO, COMPLESSIVO	CABLE (ASSEMBLE)	KABEL (KPLT.)	P494
					CABLE (CONJUNTO)	CABO CONJUNTO	CABLE ASSY.	CABLE ASSY.	
11		240557A1		1	STUD	PRIGIONIERO	GOUJON	STEHBOLZEN	210P
					PRISIONERO	PERNE	TAPEIND	STOETTEBOLT	
12		814-20070		1	SCREW M20 x 70	VITE	VIS	SCHRAUBE	P136
					TORNILLO	PARAFUSO	SCHROEF	SKRUE	
13		896-11020		1	WASHER 22 x 37 x 4 mm	ROSETTA PIANA	RONDELLE	SCHEIBE	9720
					ARANDELA	ANILHA	SLUITRING	FLADSKIVE	
14		1331939C1		1	SPACER	DISTANZIALE	ENTRETOISE	DISTANZSTÜCK	075D
					SEPARADOR	ESPACADOR	AFSTANDSRING	AFSTANDSSTYKKE	
15		87406303	a	1	CABLE Ground, 645 mm (25-25/64 in)				
						CAVO	CABLE	KABEL	650C
					CABLE	CABO	KABEL	KABEL	
15		87441877	b	1	CABLE Ground, 790 mm (31-7/64 in)				
						CAVO	CABLE	KABEL	650C
					CABLE	CABO	KABEL	KABEL	
16		614-12025		1	SCREW M12 x 25; 8,8	VITE	VIS	SCHRAUBE	P136
					TORNILLO	PARAFUSO	SCHROEF	SKRUE	
17		896-11012		1	WASHER 13,5 x 24 x 3 mm	ROSETTA PIANA	RONDELLE	SCHEIBE	9720
					ARANDELA	ANILHA	SLUITRING	FLADSKIVE	
18		318864A1		4	SEAL Toolbox	ANELLO DI TENUTA	JOINT	DICHTUNG	132A
					ANILLO DE CIERRE	ANEL DE VEDACAO	DICHTINGSRING	PAKNINGSRING	
20		87400261		1	BOX, TOOL	CASSETTA ATTREZZI	CAISSE A OUTILS	WERKZEUGKASTEN	087C
					CAJA DE HERRAMIENTA	CAIXA DE FERRAMENTA	GEREEDSCHAPSKIST	VAERKTOEJSKASSE	
21		255821A2		1	SUPPORT	SUPPORTO	SUPPORT	STÜTZE	300S
					SOPORTE	SUPORTE	STEUN	BESLAG	
22		905-6012		4	SCREW M6 x 12	VITE	VIS	SCHRAUBE	7450
					TORNILLO	PARAFUSO	SCHROEF	SKRUE	
23		825-5146		4	NUT M6	DADO	ECROU	MUTTER	5780
					TUERCA	PORCA	MOER	MØTRIK	

(a) BSN JAZ132497
(b) ASN JAZ132497

04-22		p2	08/04

BATTERY, BATTERY BOX AND CABLES
BATTERIA, VANO BATTERIA E CAVIBATERIA, CAIXA DA BATERIA E CABOS
BATTERIE, COMPARTIMENT BATTERIE ET CÂBLES
BATTERIE, BATTERIEKASTEN UND KABEL

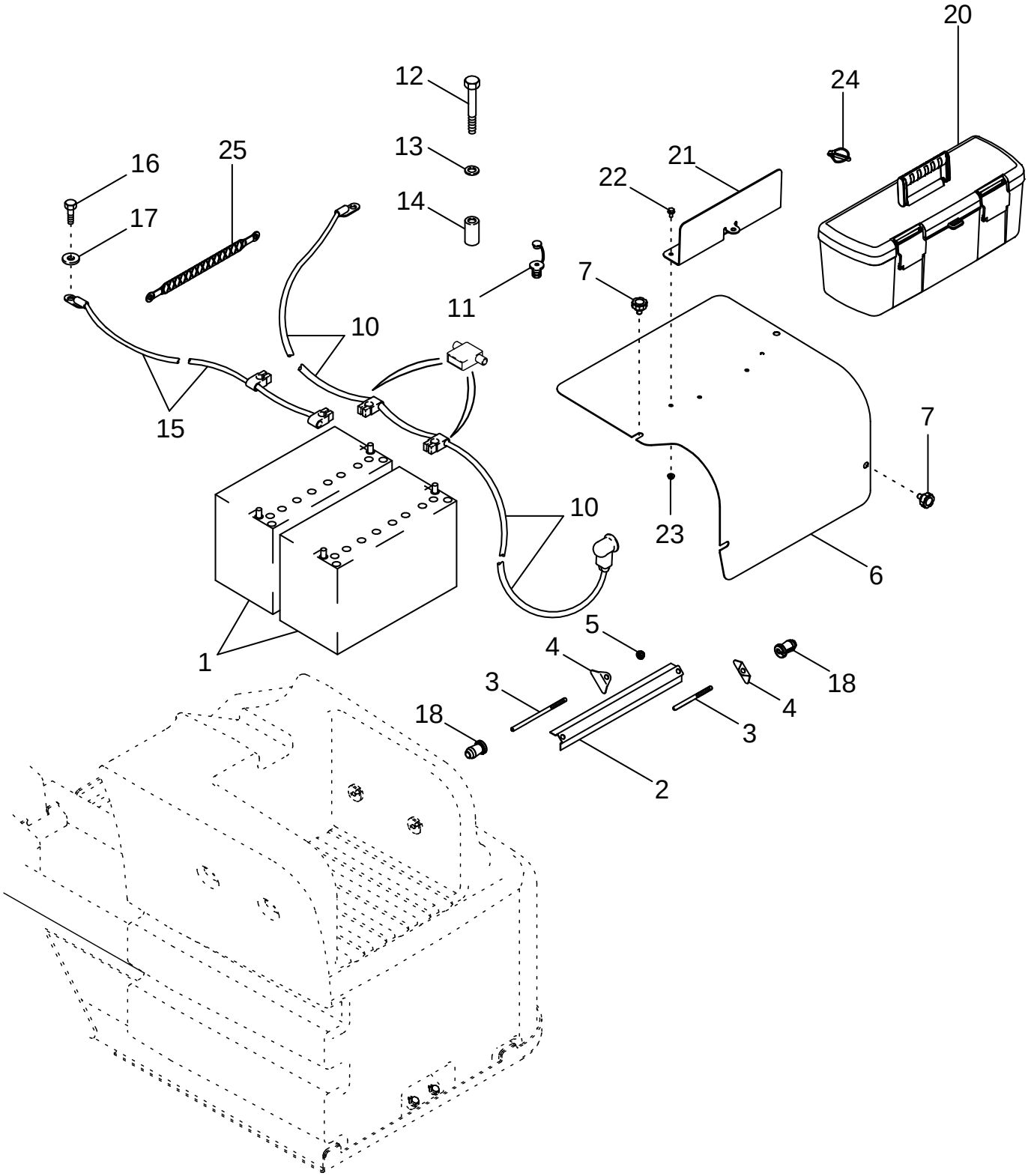

MONTAJE BATERIA
BATERÍA, CABLES Y CAJA DE LA BATERÍA
ACCU, ACCUBAK EN KABELS
BATTERI, BATTERIKASSE OG KABLER

R	N	P.N.	MOD	Q	Description Denominacion	Descrizione Denominação	Description Beschrijving	Bezeichnung Beskrivelse	L.C.
24		82013836		1	PIN, ROLL PASADOR TUBOLAR	SPINA ELASTICA TROCO	GOUPILLE ELASTIQUE SPANSTIFT	SPANNSTIFT SPLIT	200S
25		86992713	a	1	STRAP, GROUND CABLE DE MASA	PIATTINA DI MESSA A TE CABLE DE MASA	TRESSE DE MASSE DRUKSCHAKELAAR	ERDUNGSSTREIFEN STELFORBINDELSE	A005
25		87424307	b	1	STRAP, GROUND CABLE DE MASA	PIATTINA DI MESSA A TE CABLE DE MASA	TRESSE DE MASSE DRUKSCHAKELAAR	ERDUNGSSTREIFEN STELFORBINDELSE	A005

(a) BSN JAZ132478
(b) ASN JAZ132478

04-23		p1	12/02

WINDSHIELD WIPER ASSEMBLY - FRONT AND REAR
GRUPPO TERGICRISTALLI - ANTERIORE E POSTERIORE
ESSUIE-GLACES AVANT ET ARRIÈRE
SCHEIBENWISCHER VORN UND HINTEN

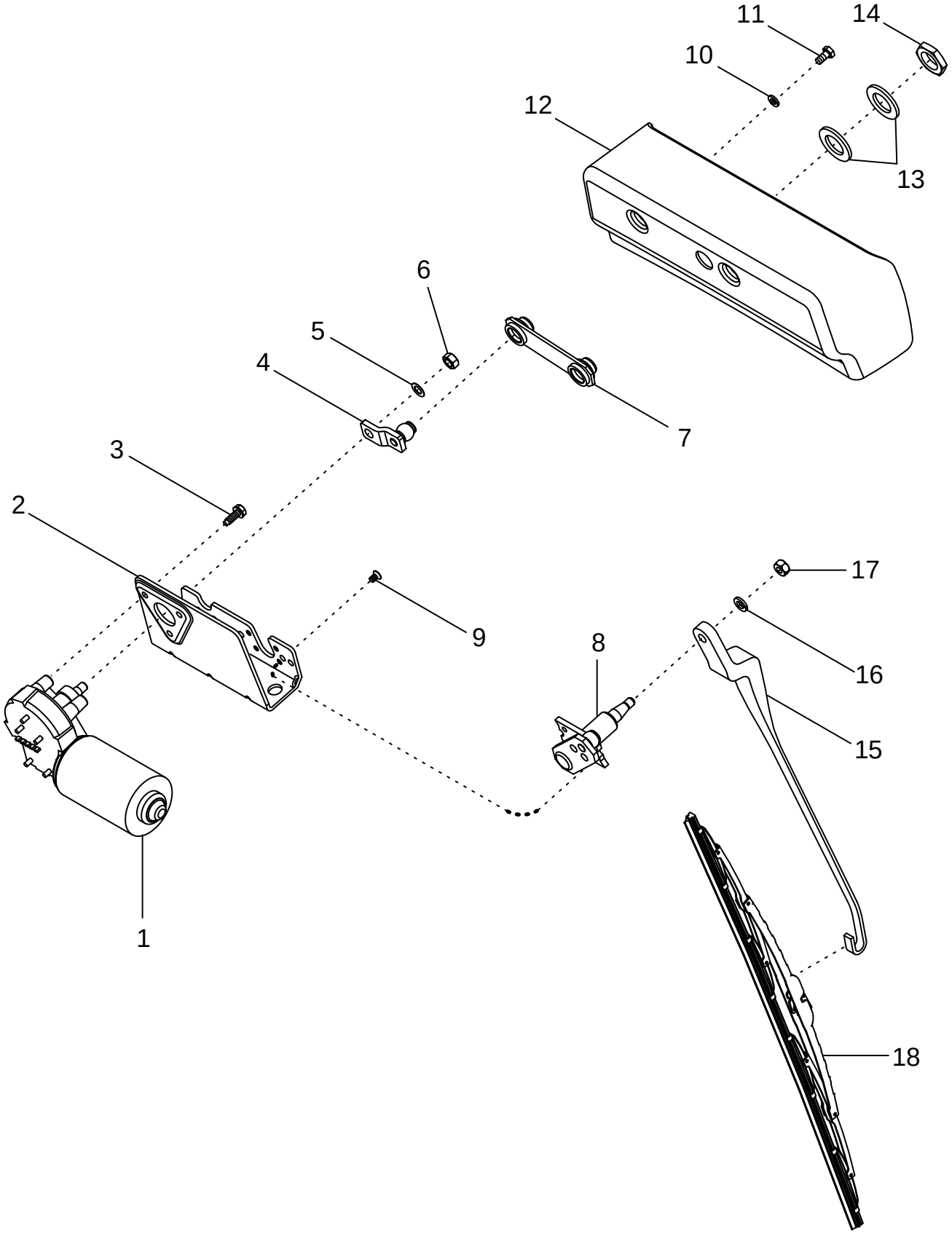

CONJUNTO DEL LIMPIAPARABRISAS - DELANTERO Y TRASERO
CONJUNTO DO LIMPA PÁRA-BRISAS - DIANTEIRO E TRASEIRO
RUITENWISSERS - VOOR EN ACHTER
FORRUDEVISKERSAMLING - FOR OG BAG

R	N	P.N.	MOD	Q	Description Denominacion	Descrizione Denominação	Description Beschrijving	Bezeichnung Beskrivelse	L.C.
1		A186256		1	WIPER MOTOR Inc. 2 - 9 LIMPIA-PARABRISAS	MOTORINO TERGICRIST ESCOVA DE LIMPA-VIDR	MOTEUR D'ESSUIE-GLA MOTOR, RUITENWISSEF	MOTOR, SCHEIBENWISS VISKERMOTOR	093T
2		N8359		1	SUPPORT APOYADERO	SUPPORTO SUPORTE	SUPPORT SUPPORT	STUETZE SUPPORT	8790
3		N8362		3	SCREW TORNILLO	VITE PARAFUSO	VIS SCHROEF	SCHRAUBE SKRUE	040V
4		N8360		1	SUPPORT APOYADERO	SUPPORTO SUPORTE	SUPPORT SUPPORT	STUETZE SUPPORT	8790
5		N8361		1	WASHER ARANDELA	ROSETTA PIANA ANILHA	RONDELLE SLUITRING	BEILAGSCHEIBE FLADSKIVE	131R
6		L112090		1	NUT TUERCA	DADO PORCA	ECROU MOER	MUTTER MØTRIK	010D
7		N8358		1	ROD VARILLA	ASTA HASTE	TRINGLE STANG	STANGE STANG	090A
8		N14112		1	SHAFT EJE	ALBERO VEIO	ARBRE AS	WELLE AKSEL	016A
9		N8356		1	SCREW TORNILLO	VITE PARAFUSO	VIS SCHROEF	SCHRAUBE SKRUE	040V
10		892-11006		2	WASHER, LOCK M6 ARANDELA DE FRENO	ROSETTA DI SICUREZZA ANILHA DE FIXACAO	RONDELLE FREIN VEERRING	SPRENGRING LAASESKIVE	132R
11		614-6012		2	SCREW M6 x 12; 8.8 TORNILLO	VITE PARAFUSO	VIS SCHROEF	SCHRAUBE SKRUE	7450
12		401109A3		1	CAGE JAULA	GABBIA GAIOLA	CAGE CAGE	KÄFIG KUGLEHOLDER	1270
13		895-11020		2	WASHER 22 x 37 x 3 mm ARANDELA	ROSETTA PIANA ANILHA	RONDELLE SLUITRING	SCHEIBE FLADSKIVE	9720
14		L112087		1	NUT M20 TUERCA	DADO PORCA	ECROU MOER	MUTTER MØTRIK	010D
15		436432A1		1	WIPER ARM 581 mm BRAZO DE ESCOBILLAS	SPAZZOLA TERGICR BRACO LIMPADOR	BRAS D'ESSUIE-GLACE WIPER ARM	WISCHERARM WIPER ARM	Z151
16		892-11008		1	WASHER M8 ARANDELA	ROSETTA PIANA ANILHA	RONDELLE SLUITRING	SCHEIBE FLADSKIVE	9720
17		825-1408		1	NUT M8 TUERCA	DADO PORCA	ECROU MOER	MUTTER MØTRIK	5780
18		448476A1		1	WIPER BLADE 600 mm RASQUETA LIMPIAPARA	SPATOLA TERGICRISTA ESCOVA DE LIMPA-VIDR	BALAI D'ESSUIE-GLACE RUITENWISSERBLAD	WISCHBLATT VISKERBLAD	175S

04-24		p1	12/02

WINDSHIELD WASHER FRONT AND REAR
LAVACRISTALLI ANTERIORE E POSTERIORE
LAVE-GLACES AVANT ET ARRIÈRE
SCHEIBENWASCHANLAGE VORN UND HINTEN

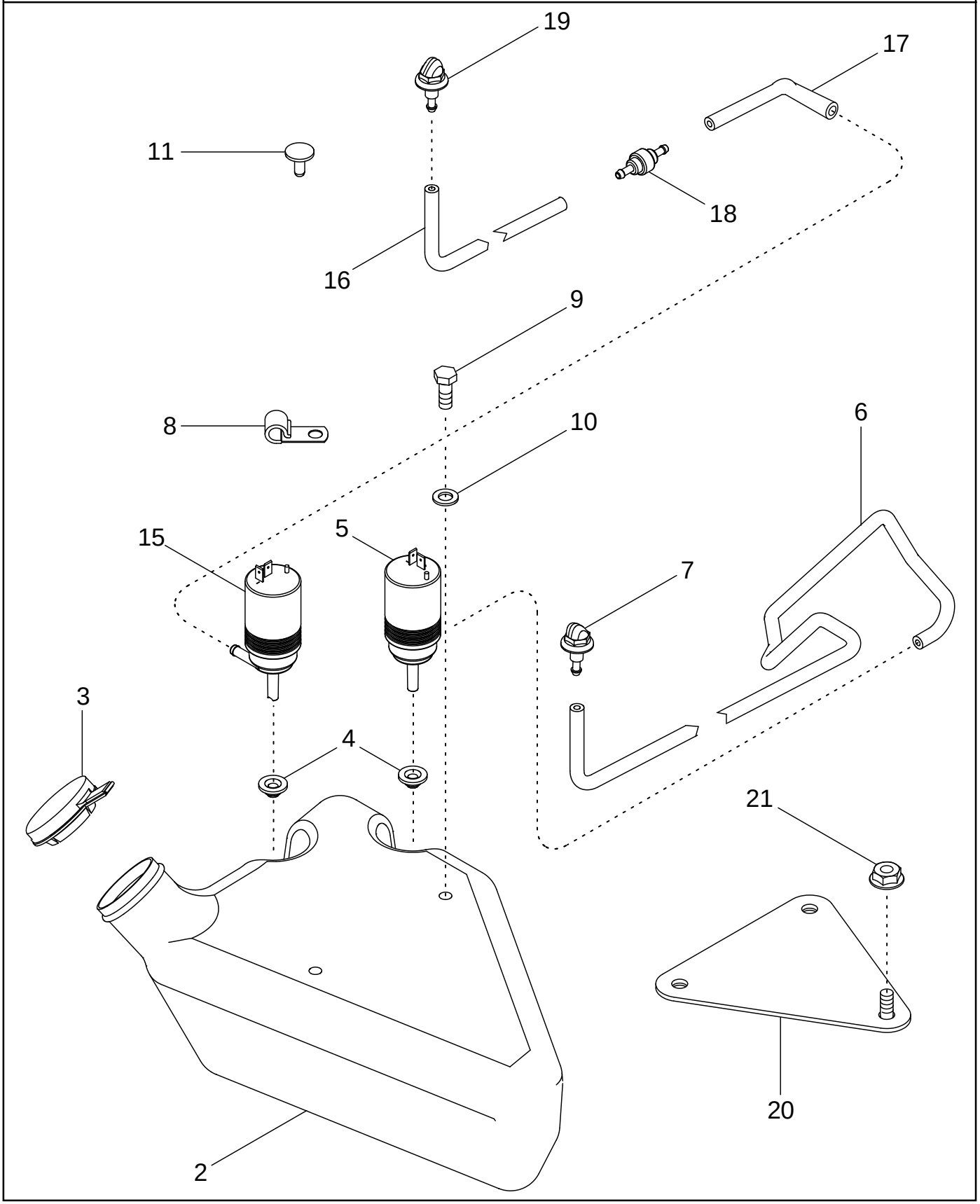

LAVAPARABRISAS DELANTERO Y TRASERO
LAVA PÁRA-BRISAS DIANTEIRO E TRASEIRO
RUITENSPROEIER VOOR EN ACHTER
FORRUDEVASKER FOR OG BAG

R	N	P.N.	MOD	Q	Description Denominacion	Descrizione Denominação	Description Beschrijving	Bezeichnung Beskrivelse	L.C.
		301523A3		1	RESERVOIR Inc. 2 - 4	SERBATOIO	RÉSERVOIR	SPEICHER	7050
					DEPÓSITO	RSERVATORIO	RESERVOIR	RESERVOIR	
2		NSS		1	NOT SERVICED SEPARATELY Tank				
						NON FORNITO SEPARAT	NON FOURNI SEPAREMI	KEIN ERSATZTEIL	064N
					NO SE REPARA SEPARA	NOT SERVICED SEPARA	NIET ALLEEN VERKRIJG	NOT SERVICED SEPARA	
3		307130A1		1	COVER	COPERCHIO	COUVERCLE	DECKEL	2250
					TAPA	TAMPA	COVER	COVER	
4		196830A1		2	GROMMET	ANELLO PASSACAVO	PASSE-FIL	TÜLLE	4020
					PASACABLES	CASQUILHO ISOLADOR	KABELDOORGANG	RING	
5		1964696C2		1	WIPER MOTOR Front	MOTORINO TERGICRIST	MOTEUR ESSUIE-GLACE	WISCHERMOTOR	Z152
					LIMPIA-PARABRISAS	ESCOVA DE LIMPA-VIDR	MOTOR, RUITENWISSEF	VISKERMOTOR	
6		1964828C1		1	PIPE 1145 mm (45-1/8 in) Cut From : 1968141CX				
						TUBO	TUYAU	ROHR	200T
					CUELLO DE CARGA	TUBO DE ENCHIMENTO	OPVULPIJP	PAAFYLDNINGSSTUDS	
7		3229749R1		1	NOZZLE CAP Front	UGELLO	BEC INJECTEUR	DÜSENKAPPE	5770
					TOBERA	INJETOR	NOZZLE CAP	NOZZLE CAP	
8		516-2295		1	CLIP 3/8 ID	FERMAGLIO	CLIP	KLEMME	1700
					SUJETADOR	FIXADOR	KLEM	KLIPS	
9		614-8020		2	SCREW M8 x 20; 8,8	VITE	VIS	SCHRAUBE	P136
					TORNILLO	PARAFUSO	SCHROEF	SKRUE	
10		895-11008		2	WASHER 9 x 17 x 1,6 mm	ROSETTA PIANA	RONDELLE	BEILAGSCHEIBE	131R
					ARANDELA	ANILHA	SLUITRING	FLADSKIVE	
11		196831A1		1	PLUG	TAPPO	BOUCHON	STOPFEN	050T
					TAPÓN	BUJÃO	PLUG	PROP	
15		1964696C2		1	WIPER MOTOR Rear	MOTORINO TERGICRIST	MOTEUR ESSUIE-GLACE	WISCHERMOTOR	Z152
					LIMPIA-PARABRISAS	ESCOVA DE LIMPA-VIDR	MOTOR, RUITENWISSEF	VISKERMOTOR	
16		1968058C1		1	HOSE Cut From 1968141C	MANICOTTO FLESSIBILE	FLEXIBLE	SCHLAUCH	030M
					MANGA	TUBO FLEXIVEL	FLEXIBELE BUIS	SLANGE	
17		233105A1		1	HOSE 250 mm (10 in) Cut From 1968141CX				
						MANICOTTO FLESSIBILE	FLEXIBLE	SCHLAUCH	030M
					MANGA	TUBO FLEXIVEL	FLEXIBELE BUIS	SLANGE	
18		K307050		1	VALVE	VALVOLA	SOUPAPE	VENTIL	9620
					VALVULA	VALVULA	VALVE	VALVE	
19		3229749R1		1	NOZZLE CAP Rear	UGELLO	BEC INJECTEUR	DÜSENKAPPE	5770
					TOBERA	INJETOR	NOZZLE CAP	NOZZLE CAP	
20		87410368		1	BRACKET Used With Severe Duty Air Cleaner				
						STAFFA	PATTE FIXATION	HALTERUNG	225S
					PIEZA DE SOPORTE	BRACADEIRA	STEUNBEUGEL	BESLAG	
21		825-2408		1	NUT M8	DADO	ECROU	MUTTER	5780
					TUERCA	PORCA	MOER	MØTRIK	

04-25		p1	12/02

HEADLAMPS
FANALI ANTERIORI
PHARES
SCHEINWERFER

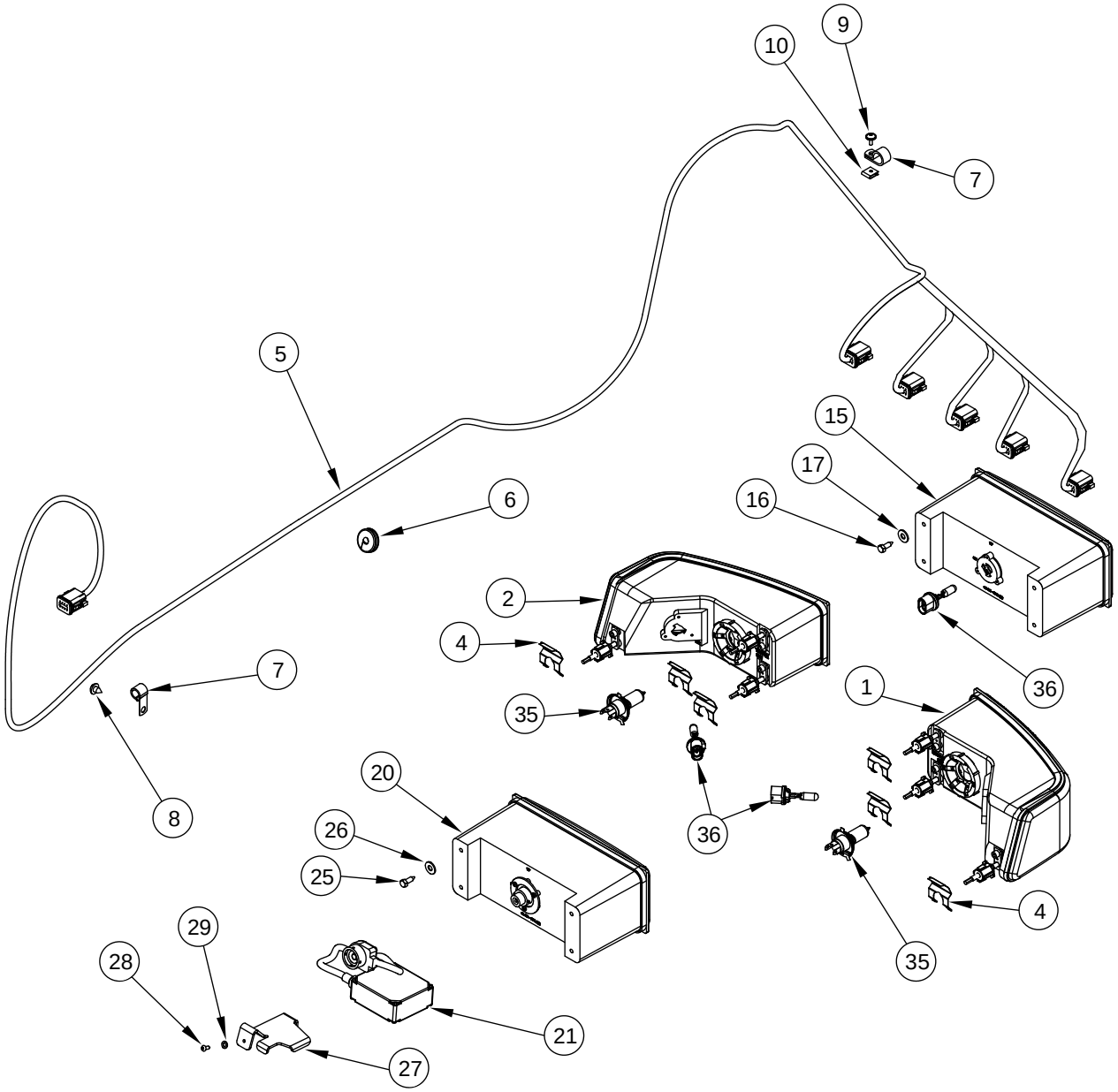

FAROS
FARÓIS DIANTEIROS
KOPLAMPEN
FORLYGTER

R	N	P.N.	MOD	Q	Description Denominacion	Descrizione Denominação	Description Beschrijving	Bezeichnung Beskrivelse	L.C.
1	1	232448A2		1	HEADLIGHT Right Hand, Inc. 35, 36				
						PROIETTORE	PHARE	SCHEINWERFER	P209
					FARO	FARO	KOPLAMP	HOVEDLAMPE	
1	2	232450A2		1	HEADLIGHT Right Hand, Inc. 35, 36				
						PROIETTORE	PHARE	SCHEINWERFER	P209
					FARO	FARO	KOPLAMP	HOVEDLAMPE	
2	1	232449A2		1	HEADLIGHT Left Hand, Inc. 35, 36				
						PROIETTORE	PHARE	SCHEINWERFER	P209
					FARO	FARO	KOPLAMP	HOVEDLAMPE	
2	2	232451A2		1	HEADLIGHT Left Hand, Inc. 35, 36				
						PROIETTORE	PHARE	SCHEINWERFER	P209
					FARO	FARO	KOPLAMP	HOVEDLAMPE	
4		259713A1		6	CLIP	FERMAGLIO	CLIP	KLAMMER	045F
					SUJETADOR	FIXADOR	KLEM	KLIPS	
5		436058A2		1	HARNESS Without Front Hitch				
						CABLAGGIO	FAISCEAU	KABELSTRANG	4160
					HAZ	CHICOTE	HARNESS	HARNESS	
5		86987468		1	HARNESS With Front Hitch	CABLAGGIO	FAISCEAU	KABELSTRANG	4160
					HAZ	CHICOTE	HARNESS	HARNESS	
6		411632A1		1	GROMMET	ANELLO PASSACAVO	PASSE-FIL	TÜLLE	4020
					PASACABLES	CASQUILHO ISOLADOR	KABELDOORGANG	RING	
7		516-22127		7	CLAMP 1/2 ID	MORSETTO	COLLIER	SCHELLE	1640
					COLLAR	BRACADEIRA	CLAMP	CLAMP	
8		93199C1		5	FASTENER	BOTTONE A SCATTO	ATTACHE	SCHALTKNOPF	123B
					BOTON DE RESORTE	PARAFUSO	DRUKKNOP	UDLOESERKNAP	
9		1975782C1		4	SCREW No.10 st x 5/8	VITE	VIS	SCHRAUBE	040V
					TORNILLO	PARAFUSO	SCHROEF	SKRUE	
10		131-839		4	NUT No. 10	DADO	ECROU	MUTTER	5780
					TUERCA	PORCA	MOER	MØTRIK	
15		232454A2		1	LAMP, WORK Center, Work Lamp, Halogen, Inc. 36				
						PROIETTORE POST.	PHARE DE TRAVAIL	ARBEITSSCHEINWERFE	219P
					FARO POSTERIOR	FARO DE TRABAJO	ACHTERSCHIJNWERPEI	ARBEJDSLAMPE	
16		779-14619		4	SCREW M6,3 st x 19	VITE	VIS	SCHRAUBE	7450
					TORNILLO	PARAFUSO	SCHROEF	SKRUE	
17		495-21031		4	WASHER 5/16 x 3/4 x 1/16	ROSETTA PIANA	RONDELLE	SCHEIBE	9720
					ARANDELA	ANILHA	SLUITRING	FLADSKIVE	
20		232455A2		1	LAMP, WORK Center, Work Lamp, High Intensity Discharge				
						PROIETTORE POST.	PHARE DE TRAVAIL	ARBEITSSCHEINWERFE	219P
					FARO POSTERIOR	FARO DE TRABAJO	ACHTERSCHIJNWERPEI	ARBEJDSLAMPE	
21		322332A1		1	BALLAST	ZAVORRA	LESTAGE	BALLAST	A004
					LASTRE	LASTRE	BALLAST	BALLAST	
25		779-14619		4	SCREW M6,3 st x 19	VITE	VIS	SCHRAUBE	7450
					TORNILLO	PARAFUSO	SCHROEF	SKRUE	
26		495-21031		4	WASHER 5/16 x 3/4 x 1/16	ROSETTA PIANA	RONDELLE	SCHEIBE	9720
					ARANDELA	ANILHA	SLUITRING	FLADSKIVE	
27		319929A1		1	SUPPORT	SUPPORTO	SUPPORT	STUETZE	8790
					APOYADERO	SUPORTE	SUPPORT	SUPPORT	

(1) Rest Of Europe
(2) United Kingdom

04-25		p2	12/02

HEADLAMPS
FANALI ANTERIORI
PHARES
SCHEINWERFER

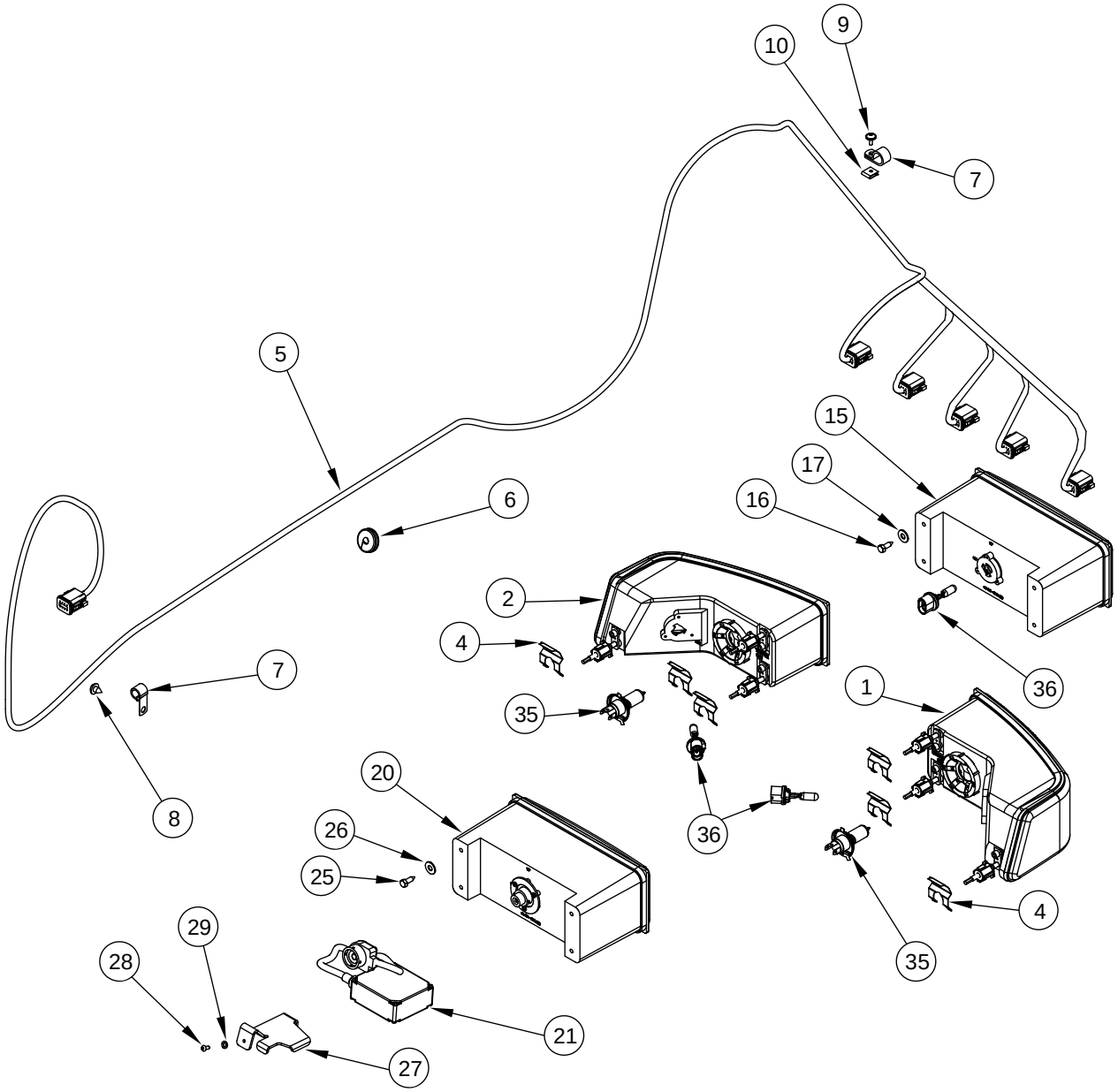

FAROS
FARÓIS DIANTEIROS
KOPLAMPEN
FORLYGTER

R	N	P.N.	MOD	Q	Description Denominacion	Descrizione Denominação	Description Beschrijving	Bezeichnung Beskrivelse	L.C.
28		760-14313		1	SCREW M4,2 x 13 TORNILLO	VITE PARAFUSO	VIS SCHROEF	SCHRAUBE SKRUE	7450
29		895-11005		1	WASHER 5,5 x 10 x 1 mm ARANDELA	ROSETTA PIANA ANILHA	RONDELLE SLUITRING	SCHEIBE FLADSKIVE	9720
35		91967C1		1	BULB BOMBILLA	LAMPADA LAMPADA	AMPOULE LAMP	GLÜHBIRNE PÆRE	030L
36		323093A1		1	BULB 885-12V, Work Lamp BOMBILLA	LAMPADA LAMPADA	AMPOULE LAMP	GLÜHBIRNE PÆRE	030L

HEADLAMPS - AUXILIARY
FANALI ANTERIORI - AUSILIARI
PHARES AUXILIAIRES
ZUSATZSCHEINWERFER

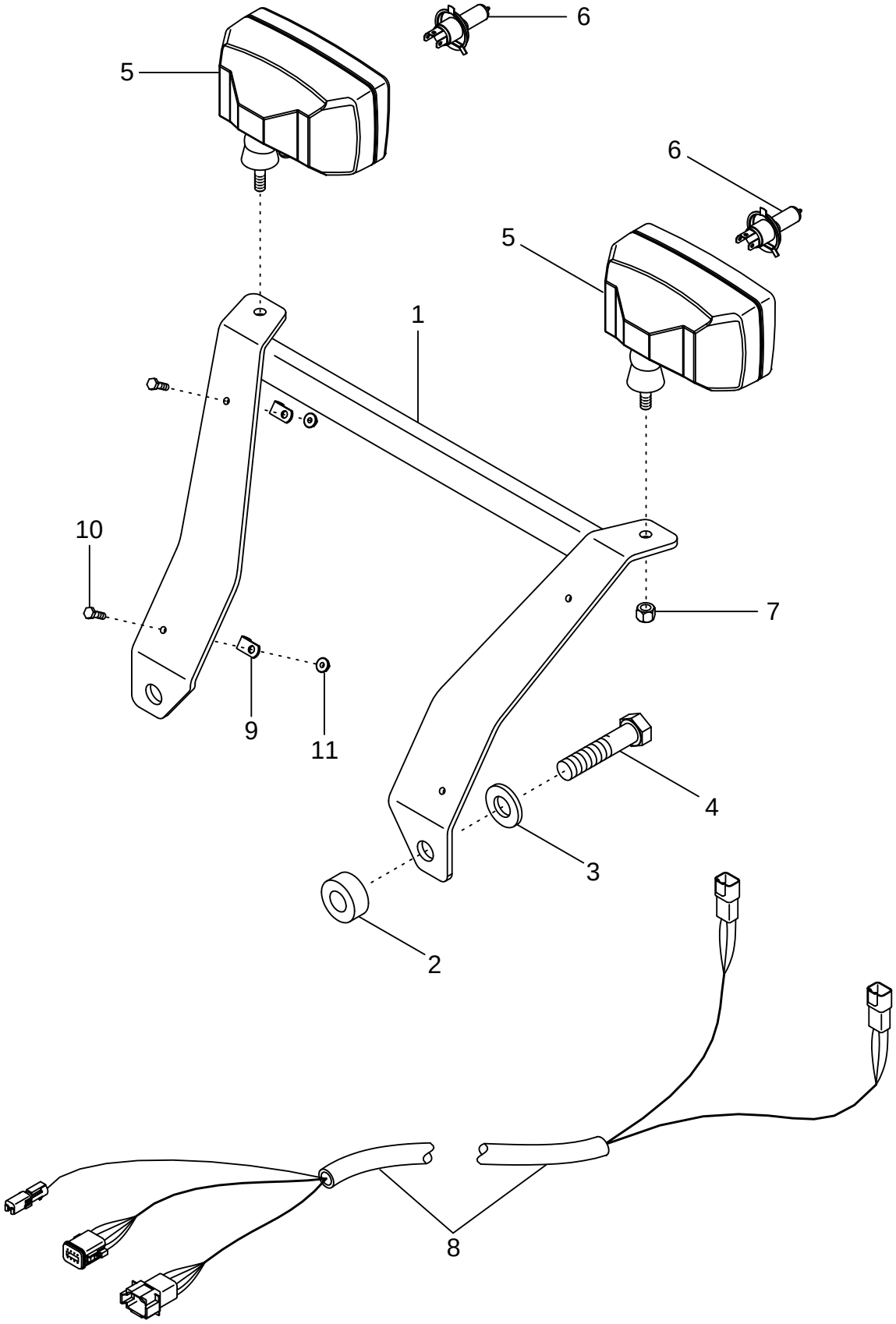

FAROS - AUXILIAR
FARÓIS DIANTEIROS AUXILIARES
KOPLAMPEN - EXTRA
FORLYGTER - HJÆLPE-

R	N	P.N.	MOD	Q	Description Denominacion	Descrizione Denominação	Description Beschrijving	Bezeichnung Beskrivelse	L.C.
1		87403780		1	BRACKET PIEZA DE SOPORTE	STAFFA BRACADEIRA	PATTE FIXATION STEUNBEUGEL	HALTERUNG BESLAG	225S
2		87403935		2	SPACER SEPARADOR	DISTANZIALE ESPACADOR	ENTRETOISE AFSTANDSRING	DISTANZSTÜCK AFSTANDSSTYKKE	075D
3		896-15020		2	WASHER 22 x 44 x 5mm ARANDELA	ROSETTA PIANA ANILHA	RONDELLE SLUITRING	SCHEIBE FLADSKIVE	9720
4		258504A1		2	SCREW M20 x 90; 10.9 TORNILLO	VITE PARAFUSO	VIS SCHROEF	SCHRAUBE SKRUE	7450
5		87403654		2	HEADLAMP, LH Left Hand Dip, Inc. 6, 7, Optional With 87403655				
						FANALE, SN.	FEU, GAUCHE	SCHEINWERFER, LINKS	221P
					FARO, IZQ.	FAROL, ESQ.	KOPLAMP, LH	FORLYGTE, VENSTER	
5		87403655		2	HEADLAMP, LH Right Hand Dip, Inc. 6, 7, Optional With 87403654				
						FANALE, SN.	FEU, GAUCHE	SCHEINWERFER, LINKS	221P
					FARO, IZQ.	FAROL, ESQ.	KOPLAMP, LH	FORLYGTE, VENSTER	
6		91967C1		2	BULB H4 BOMBILLA	LAMPADA LAMPADA	AMPOULE LAMP	GLÜHBIRNE PÆRE	030L
7		832-10410		2	NUT M10; 8 TUERCA	DADO PORCA	ECROU MOER	MUTTER MØTRIK	5780
8		87413858		1	HARNESS Front Hitch Headlight				
						CABLAGGIO	FAISCEAU	KABELSTRANG	4160
					HAZ	CHICOTE	HARNESS	HARNESS	
9		515-2179		4	CLAMP 7,9 mm COLLAR	MORSETTO BRACADEIRA	COLLIER CLAMP	SCHELLE CLAMP	1640
10		614-6020		4	BOLT M6 x 20; 8.8 TORNILLO	BULLONE PARAFUSO	BOULON BOUT	SCHAUBENBOLZEN SKRUE	140B
11		825-2406		4	NUT M6 TUERCA	DADO PORCA	ECROU MOER	MUTTER MØTRIK	5780

04-27		p1	12/02

ISO 11783 HARNESS AND MONITOR
ISO 11783 - CABLAGGIO E MONITOR
MONITEUR ET FAISCEAU ISO 11783
ISO 11783 KABELBAUM UND ANZEIGE

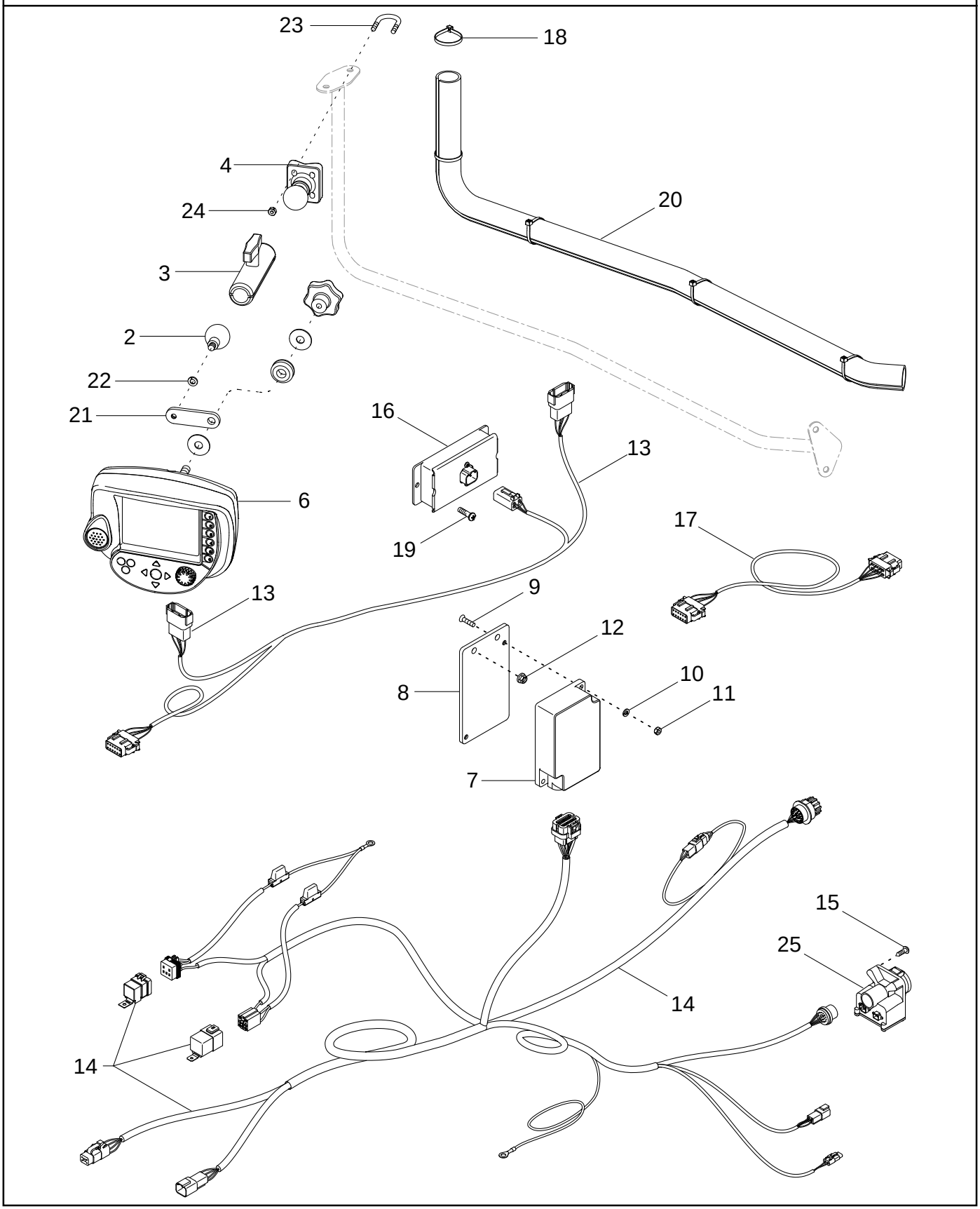

MONITOR Y MAZO DE CABLES ISO 11783
CONJUNTO DE FIOS E MONITOR ISO 11783
BEDRADING EN MONITOR ISO 11783
ISO 11783 LEDNINGSNET OG MONITOR

R	N	P.N.	MOD	Q	Description Denominacion	Descrizione Denominação	Description Beschrijving	Bezeichnung Beskrivelse	L.C.
		87433368		1	HOLDER Assembly, Monitor Inc. 2 - 4				
						SOSTEGNO	SUPPORT	HALTER	174S
					SOPORTE	SUPORTE	HOUDER	HOLDER	
2		87432348		1	RAM BOTTOM	CILINDRO, PARTE INFE	FOND-DE-VERIN	ZYLINDERBODEN	Z504
					FONDO CILINDRO	RAM BOTTOM	RAM BOTTOM	RAM BOTTOM	
3		408863A1		1	RAM BOTTOM	CILINDRO, PARTE INFE	FOND-DE-VERIN	ZYLINDERBODEN	Z504
					FONDO CILINDRO	RAM BOTTOM	RAM BOTTOM	RAM BOTTOM	
4		408865A1		1	RAM FOOT	PIEDE, CYLINDRO	PIED-VERIN	ZYLINDERFUSS	Z582
					PIE CILINDRO	RAM FOOT	RAM FOOT	RAM FOOT	
6		87447844		1	MONITOR, CONTROL With Software				
						MONITOR	MONITEUR	KONTROLLANZEIGE	880M
					MONITOR	MONITOR	MONITOR	MONITORBOKS	
7		416591A1		1	MODULE Without Software	MODULE	MODULE	MODUL	T102
					MODULE	MODULE	MODULE	MODULE	
8		87406980		1	PLATE Mounting	PIASTRA	PLAQUE	PLATTE	105P
					PLACA	CHAPA	PLAAT	PLADE	
9		843-2625		2	SCREW M6 x 25	VITE	VIS	SCHRAUBE	7450
					TORNILLO	PARAFUSO	SCHROEF	SKRUE	
10		892-11006		2	WASHER, LOCK 6 mm	ROSETTA DI SICUREZZA	RONDELLE FREIN	SPRENGRING	132R
					ARANDELA DE FRENO	ANILHA DE FIXACAO	VEERRING	LAASESKIVE	
11		829-1406		2	NUT M6	DADO	ECROU	MUTTER	010D
					TUERCA	PORCA	MOER	MØTRIK	
12		825-2408		2	NUT M8	DADO	ECROU	MUTTER	5780
					TUERCA	PORCA	MOER	MØTRIK	
13		87418143		1	HARNESS Inside Cab	CABLAGGIO	FAISCEAU	KABELSTRANG	4160
					HAZ	CHICOTE	HARNESS	HARNESS	
14		87419306		1	HARNESS Outside Cab	CABLAGGIO	FAISCEAU	KABELSTRANG	4160
					HAZ	CHICOTE	HARNESS	HARNESS	
15		780-14625		4	SCREW M6,3 st x 25	VITE	VIS	SCHRAUBE	040V
					TORNILLO	PARAFUSO	SCHROEF	SKRUE	
16		284638A2		1	CONNECTOR Active Terminator				
						CONNESSIONE	CONNECTEUR	STECKVERBINDUNG ELI	1950
					CONECTOR	CONECTOR	VERBINDING	STIK	
17		87435691		1	HARNESS Monitor Jumper	CABLAGGIO	FAISCEAU	KABELSTRANG	4160
					HAZ	CHICOTE	HARNESS	HARNESS	
18		L11541		5	STRAP	BANDELLA	SANGLE	GURT	532B
					BANDA	BANDA	RIEM	STROP	
19		760-14416		2	SCREW M4,8 x 16	VITE	VIS	SCHRAUBE	7450
					TORNILLO	PARAFUSO	SCHROEF	SKRUE	
20		87435704		1	CONDUIT	CONDOTTA	CONDUIT	LEITUNG	1920
					TUBERIA	CONDUITE	CONDUIT	RENDE	
21		87432354		1	BRACKET	STAFFA	PATTE FIXATION	HALTERUNG	225S
					PIEZA DE SOPORTE	BRACADEIRA	STEUNBEUGEL	BESLAG	
22		140045		1	WASHER, LOCK	ROSETTA DI SICUREZZA	RONDELLE FREIN	SPRENGRING	132R
					ARANDELA DE FRENO	ANILHA DE FIXACAO	VEERRING	LAASESKIVE	
23		19-6258		2	U-BOLT	CAVALLOTTO	CAVALIER	U-BOLZEN	P611
					HORQUILLA	MOLA DE ENGATE	VEERKLEM	HAARNAAL	
24		425-104		4	NUT 1/4	DADO	ECROU	MUTTER	5780
					TUERCA	PORCA	MOER	MØTRIK	

04-27		p2	12/02

ISO 11783 HARNESS AND MONITOR
ISO 11783 - CABLAGGIO E MONITOR
MONITEUR ET FAISCEAU ISO 11783
ISO 11783 KABELBAUM UND ANZEIGE

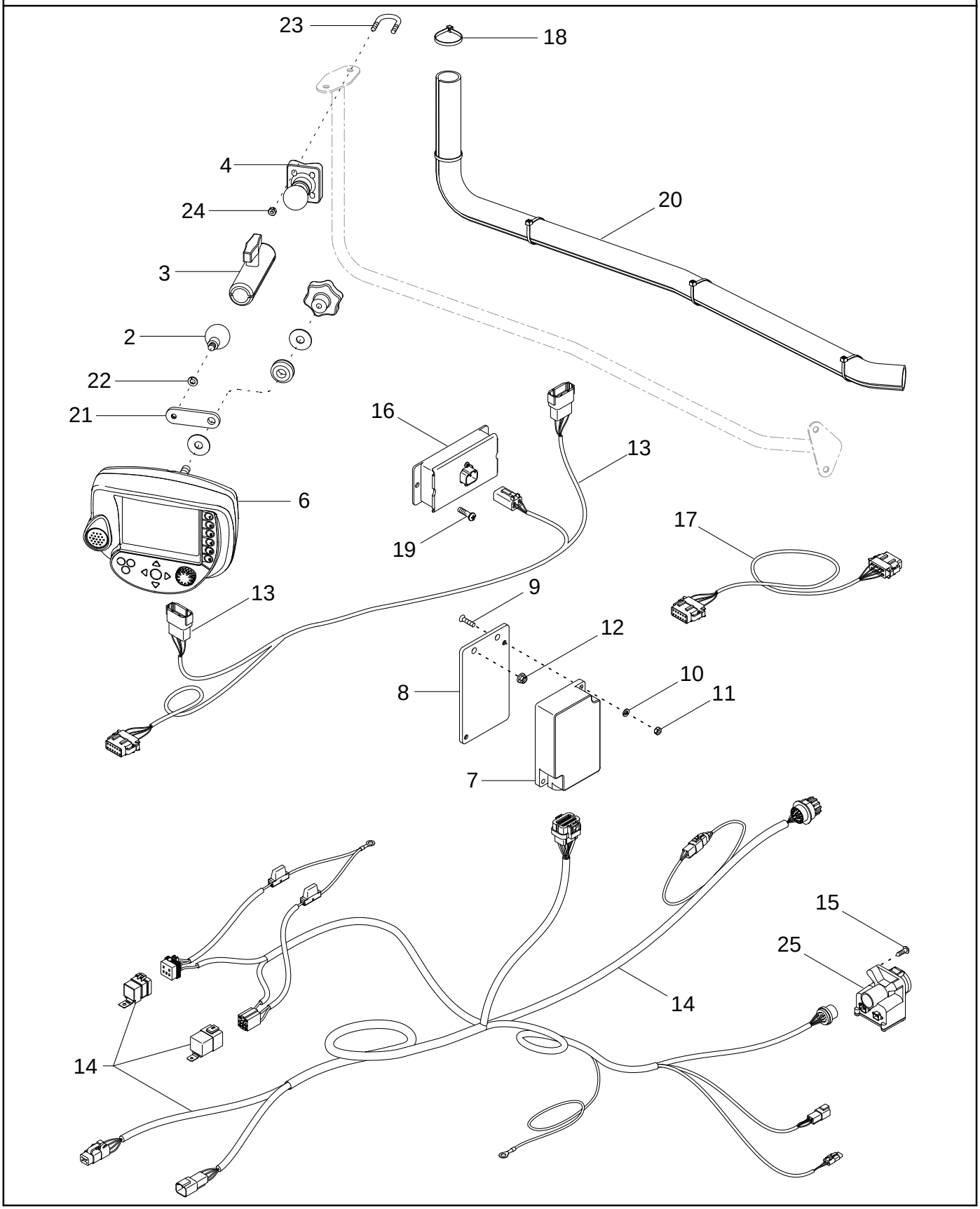

MONITOR Y MAZO DE CABLES ISO 11783
CONJUNTO DE FIOS E MONITOR ISO 11783
BEDRADING EN MONITOR ISO 11783
ISO 11783 LEDNINGSNET OG MONITOR

R	N	P.N.	MOD	Q	Description Denominacion	Descrizione Denominação	Description Beschrijving	Bezeichnung Beskrivelse	L.C.
25		87418273		1	CONNECTOR CONECTOR	CONNESSIONE CONECTOR	CONNECTEUR VERBINDING	STECKVERBINDUNG ELI STIK	235C

04-28		p1	09/04

LAMPS - FRONT POSITION AND WORK
LUCI - ANTERIORI, DI POSIZIONE E DI LAVORO
FEUX DE POSITION AVANT ET PROJECTEURS DE TRAVAIL
LEUCHTEN - VORDERE POSITIONSLEUCHTEN UND ARBEITSSCHEINWERFER

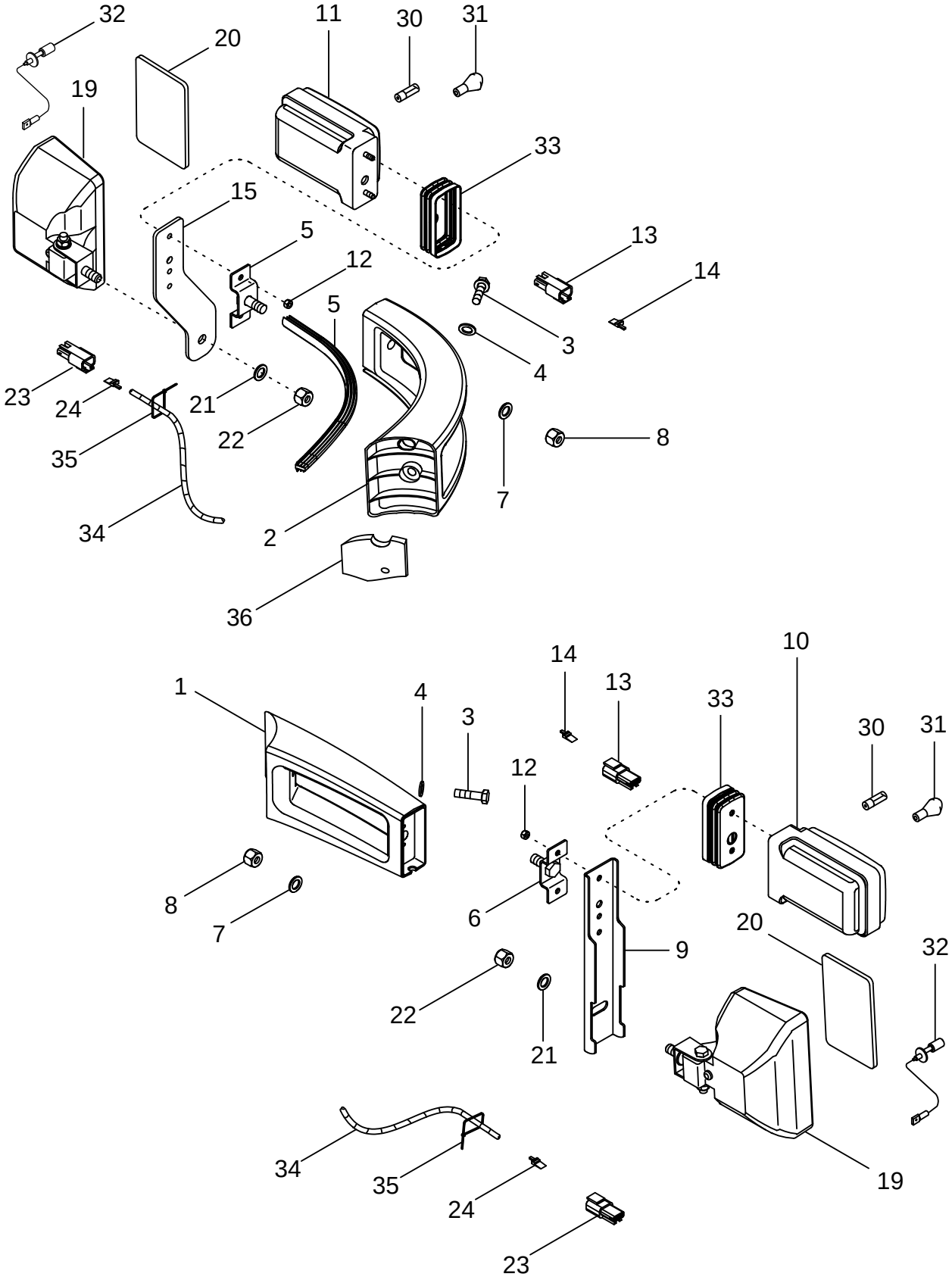

LUCES - DE TRABAJO Y DE POSICIÓN DELANTERAS
LUZES DE POSIÇÃO E DE TRABALHO DIANTEIRAS
LICHTEN- VOOR- EN SCHIJNWERPER-
LYGTER - FRONTPOSITION OG ARBEJDE

R	N	P.N.	MOD	Q	Description Denominacion	Descrizione Denominação	Description Beschrijving	Bezeichnung Beskrivelse	L.C.
1		300182A2		1	SUPPORT Right Hand SOPORTE	SUPPORTO SUPORTE	SUPPORT STEUN	STÜTZE BESLAG	300S
2		300183A2		1	SUPPORT Left Hand SOPORTE	SUPPORTO SUPORTE	SUPPORT STEUN	STÜTZE BESLAG	300S
3		514-637		2	BOLT M8 x 35 TORNILLO	BULLONE PARAFUSO	BOULON BOUT	SCHAUBENBOLZEN SKRUE	0810
4		256402A1		2	WASHER 9 x 17 x 1,6 mm ARANDELA	ROSETTA PIANA ANILHA	RONDELLE SLUITRING	BEILAGSCHEIBE FLADSKIVE	131R
5		308492A1		1	SEAL Left Hand ANILLO DE CIERRE	ANELLO DI TENUTA ANEL DE VEDACAO	JOINT DICHTINGSRING	DICHTUNG PAKNINGSRING	132A
6		359807A1		2	SUPPORT SOPORTE	SUPPORTO SUPORTE	SUPPORT STEUN	STÜTZE BESLAG	300S
7		895-18010		2	WASHER 11 x 18 x 1,6 mm ARANDELA	ROSETTA PIANA ANILHA	RONDELLE SLUITRING	SCHEIBE FLADSKIVE	9720
8		832-10410		2	NUT M10; 8 TUERCA	DADO PORCA	ECROU MOER	MUTTER MØTRIK	5780
9		300188A1		1	SUPPORT Right Hand SOPORTE	SUPPORTO SUPORTE	SUPPORT STEUN	STÜTZE BESLAG	300S
10		303595A2		1	LAMP Flash And Position, Right Hand, Inc. 30, 31				
						FANALE	LAMPE	LEUCHTE	009F
					FARO	FAROL	LAMP	LYGTE	
11		303597A2		1	LIGHT Flash And Position, Left Hand, Inc. 30, 31				
						LAMPADA	FEU	LICHT	Z496
					PILOTO	FAROL	LIGHT	LIGHT	
12		824-1405		4	NUT M5; 5 TUERCA	DADO PORCA	ECROU MOER	MUTTER MØTRIK	5780
13		276426A1		2	CONNECTOR 3 Pin CONECTOR	CONNESSIONE CONECTOR	CONNECTEUR VERBINDING	STECKVERBINDUNG ELI STIK	235C
14		280448A1		2	WEDGE CUNA	CUNEE CORTE DE TECIDO	CALE DE BLOCAGE WEDGE	UNTERLEGEKEIL KILE	9730
15		87406491		1	BRACKET Left Hand PIEZA DE SOPORTE	STAFFA BRACADEIRA	PATTE FIXATION STEUNBEUGEL	HALTERUNG BESLAG	225S
19		301891A2		2	LAMP Work Lamp, Inc. 20, 32				
						FANALE	LAMPE	LEUCHTE	009F
					FARO	FAROL	LAMP	LYGTE	
20		NSS		1	NOT SERVICED SEPARATELY LENS				
						NON FORNITO SEPARAT	NON FOURNI SEPAREMI	KEIN ERSATZTEIL	064N
					NO SE REPARA SEPARA	NOT SERVICED SEPARA	NIET ALLEEN VERKRIJG	NOT SERVICED SEPARA	
21		895-18010		2	WASHER 11 x 18 x 1,6 mm ARANDELA	ROSETTA PIANA ANILHA	RONDELLE SLUITRING	SCHEIBE FLADSKIVE	9720
22		832-10410		2	NUT M10; 8 TUERCA	DADO PORCA	ECROU MOER	MUTTER MØTRIK	5780
23		222136A1		2	CONNECTOR 2 Pin CONECTOR	CONNESSIONE CONECTOR	CONNECTEUR VERBINDING	STECKVERBINDUNG ELI STIK	235C
24		222848A1		2	CONNECTOR CONECTOR	CONNESSIONE CONECTOR	CONNECTEUR VERBINDING	STECKVERBINDUNG ELI STIK	235C
30		1094368R1		1	BULB R19/5 12V5W AMPOLLA	LAMPADINA LAMPADA	AMPOULE LAMP	GLÜHBIRNE PAERE	P904

04-28		p2	09/04

LAMPS - FRONT POSITION AND WORK
LUCI - ANTERIORI, DI POSIZIONE E DI LAVORO
FEUX DE POSITION AVANT ET PROJECTEURS DE TRAVAIL
LEUCHTEN - VORDERE POSITIONSLEUCHTEN UND ARBEITSSCHEINWERFER

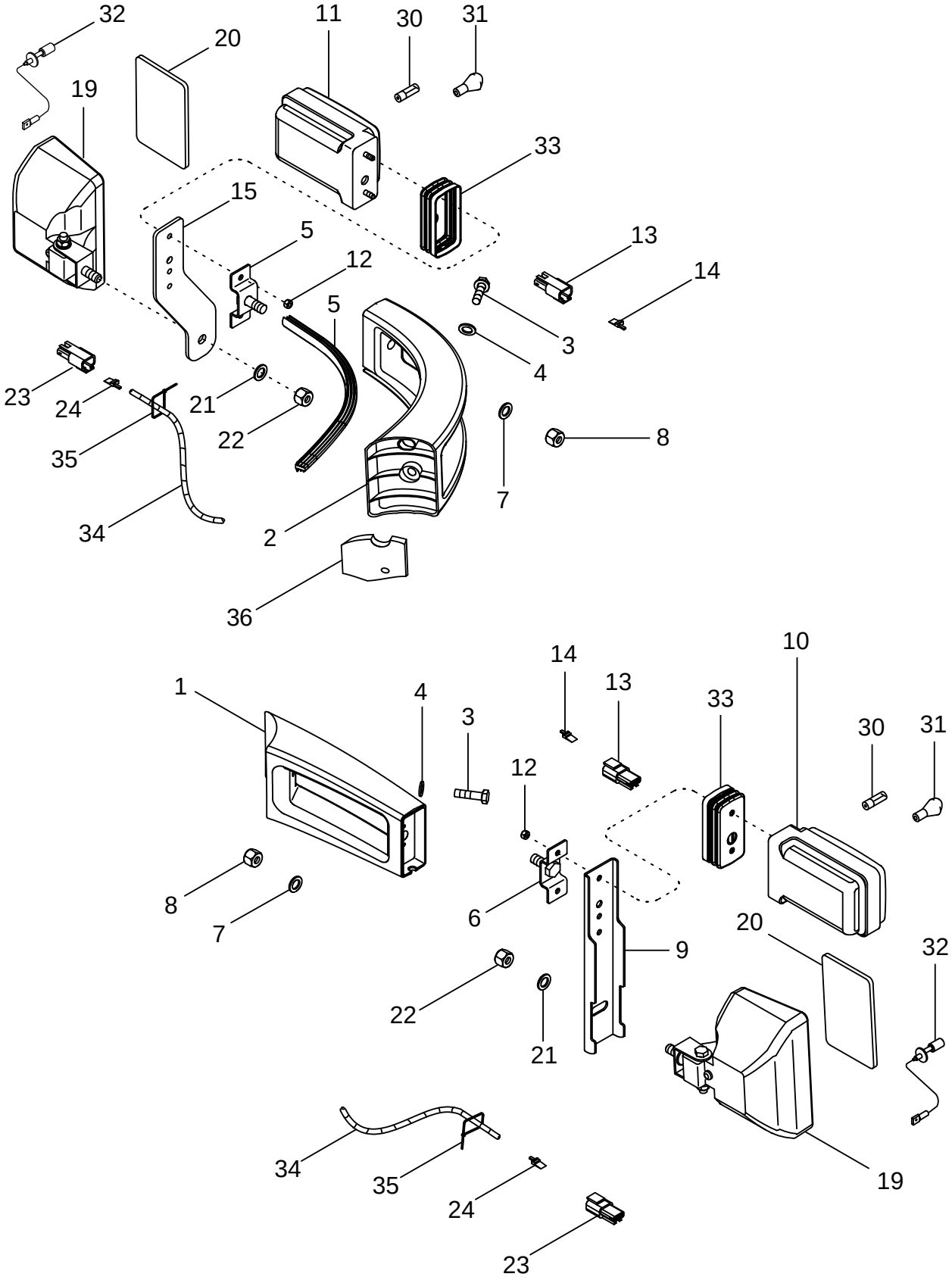

LUCES - DE TRABAJO Y DE POSICIÓN DELANTERAS
LUZES DE POSIÇÃO E DE TRABALHO DIANTEIRAS
LICHTEN- VOOR- EN SCHIJNWERPER-
LYGTER - FRONTPOSITION OG ARBEJDE

R	N	P.N.	MOD	Q	Description Denominacion	Descrizione Denominação	Description Beschrijving	Bezeichnung Beskrivelse	L.C.
31		3131227R1		1	BULB 12V, 21W BOMBILLA	LAMPADA LAMPADA	AMPOULE LAMP	GLÜHBIRNE PÆRE	030L
32		1312210C2		1	BULB 12V - 55W BOMBILLA	LAMPADA LAMPADA	AMPOULE LAMP	GLÜHBIRNE PÆRE	030L
33		359594A1		2	BOOT CASQUETE	CUFFIA FOLE	COIFFE KABELDOORGANG	MANSCHETTE MANCHET	330C
34		387171A1		2	CONDUIT 150 mm TUBERIA	CONDOTTA CONDUITE	CONDUIT CONDUIT	LEITUNG RENDE	1920
35		387281A1		4	STRAP, SECURING CORREA DE FIJACION	CINGHIA DI FISSAGGIO CORREIA DE FIXACAO	SANGLE DE FIXATION 'BORGRIEM	SICHERUNGSRIEMEN FASTSPAENDINGSSTRC	172C
36		391624A1		1	SEAL ANILLO DE CIERRE	ANELLO DI TENUTA ANEL DE VEDACAO	JOINT DICHTINGSRING	DICHTUNG PAKNINGSRING	132A

04-29		p1	12/02

LAMPS - CAB ROOF
LUCI - TETTO DELLA CABINA
FEUX DU TOIT DE LA CABINE
KABINENDACHLEUCHTEN

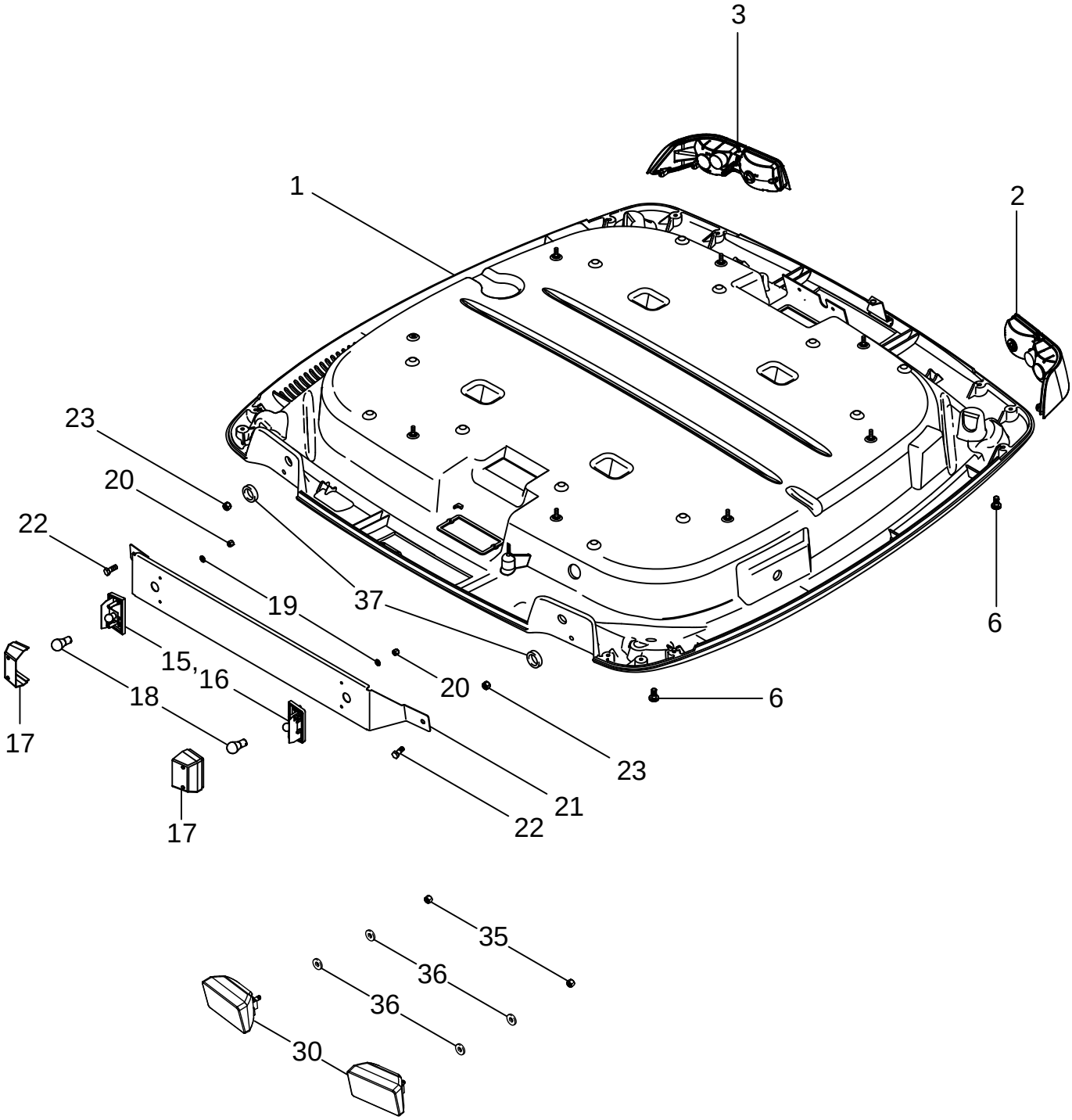

LUCES - TECHO DE LA CABINA
LUZES DO TECTO DA CABINA
LICHTEN - CABINEDAK
LYGTER - FØRERHUSTAG

R	N	P.N.	MOD	Q	Description Denominacion	Descrizione Denominação	Description Beschrijving	Bezeichnung Beskrivelse	L.C.
1	1	REF		1	INSTRUCTION Roof MANUAL	ISTRUZIONI INSTRUCAO	NOTICE INSTRUCTION	HINWEIS SKO, INDRE	Z571
2		279228A1		1	LIGHT ASSY. Right Hand Front, Work Lamp FARO (CONJ)	LUCE, COMPLESSIVO FAROL CONJUNTO	FEU (ASSEMBLE) LIGHT ASSY.	LAMPE (KPLT.) LIGHT ASSY.	P478
3		279227A1		1	LIGHT, WORK Left Hand Front, Work Lamp LUZ DE TRABAJO	GRUPPO SPIE, LAVORO FAROL DE TRABALHO	PHARE DE TRAVAIL LIGHT, WORK	ARBEITSSCHEINWERFE LIGHT, WORK	P892
6		840-1612		12	SCREW M6 x 12; 4.8 TORNILLO	VITE PARAFUSO	VIS SCHROEF	SCHRAUBE SKRUE	7450
10		96901C1		2	GROMMET PASACABLES	ANELLO PASSACAVO CASQUILHO ISOLADOR	PASSE-FIL KABELDOORGANG	TÜLLE RING	4020
11		895-18010		4	WASHER 11 x 18 x 1,6 mm ARANDELA	ROSETTA PIANA ANILHA	RONDELLE SLUITRING	SCHEIBE FLADSKIVE	9720
12		832-10410		2	NUT M10; 8 TUERCA	DADO PORCA	ECROU MOER	MUTTER MØTRIK	5780
		92190C1		2	LIGHT ASSY. License Plate, Inc. 15 - 18 FARO (CONJ)	LUCE, COMPLESSIVO FAROL CONJUNTO	FEU (ASSEMBLE) LIGHT ASSY.	LAMPE (KPLT.) LIGHT ASSY.	P478
15		NSS		1	NOT SERVICED SEPARATELY Base NO SE REPARA SEPARA	NON FORNITO SEPARAT NOT SERVICED SEPARA	NON FOURNI SEPAREMI NIET ALLEEN VERKRIJG	KEIN ERSATZTEIL NOT SERVICED SEPARA	064N
16		NSS		1	NOT SERVICED SEPARATELY Housing NO SE REPARA SEPARA	NON FORNITO SEPARAT NOT SERVICED SEPARA	NON FOURNI SEPAREMI NIET ALLEEN VERKRIJG	KEIN ERSATZTEIL NOT SERVICED SEPARA	064N
17		NSS		1	NOT SERVICED SEPARATELY Lens NO SE REPARA SEPARA	NON FORNITO SEPARAT NOT SERVICED SEPARA	NON FOURNI SEPAREMI NIET ALLEEN VERKRIJG	KEIN ERSATZTEIL NOT SERVICED SEPARA	064N
18		H40556		1	BULB 12V BOMBILLA	LAMPADA LAMPADA	AMPOULE LAMP	GLÜHBIRNE PÆRE	030L
19		895-11005		4	WASHER 5,5 x 10 x 1 mm ARANDELA	ROSETTA PIANA ANILHA	RONDELLE SLUITRING	SCHEIBE FLADSKIVE	9720
20		824-1405		4	NUT M5 TUERCA	DADO PORCA	ECROU MOER	MUTTER MØTRIK	5780
21		299407A1		1	SUPPORT License Plate APOYADERO	SUPPORTO SUPORTE	SUPPORT SUPPORT	STUETZE SUPPORT	8790
22		614-10025		2	BOLT M10 x 25; 8,8 TORNILLO	BULLONE PARAFUSO	BOULON BOUT	SCHAUBENBOLZEN SKRUE	140B
23		832-10410		2	NUT M10; 8 TUERCA	DADO PORCA	ECROU MOER	MUTTER MØTRIK	5780
30	2	178345A1		2	LIGHT, WORK Work Lamp LUZ DE TRABAJO	GRUPPO SPIE, LAVORO FAROL DE TRABALHO	PHARE DE TRAVAIL LIGHT, WORK	ARBEITSSCHEINWERFE LIGHT, WORK	P892
35		832-10410		2	NUT M10 TUERCA	DADO PORCA	ECROU MOER	MUTTER MØTRIK	5780
36		895-18010		4	WASHER 11 x 18 x 1,6 mm ARANDELA	ROSETTA PIANA ANILHA	RONDELLE SLUITRING	SCHEIBE FLADSKIVE	9720

(1) See Figure 09-13
(2) See Figure 04-31

LAMPS - CAB ROOF
LUCI - TETTO DELLA CABINA
FEUX DU TOIT DE LA CABINE
KABINENDACHLEUCHTEN

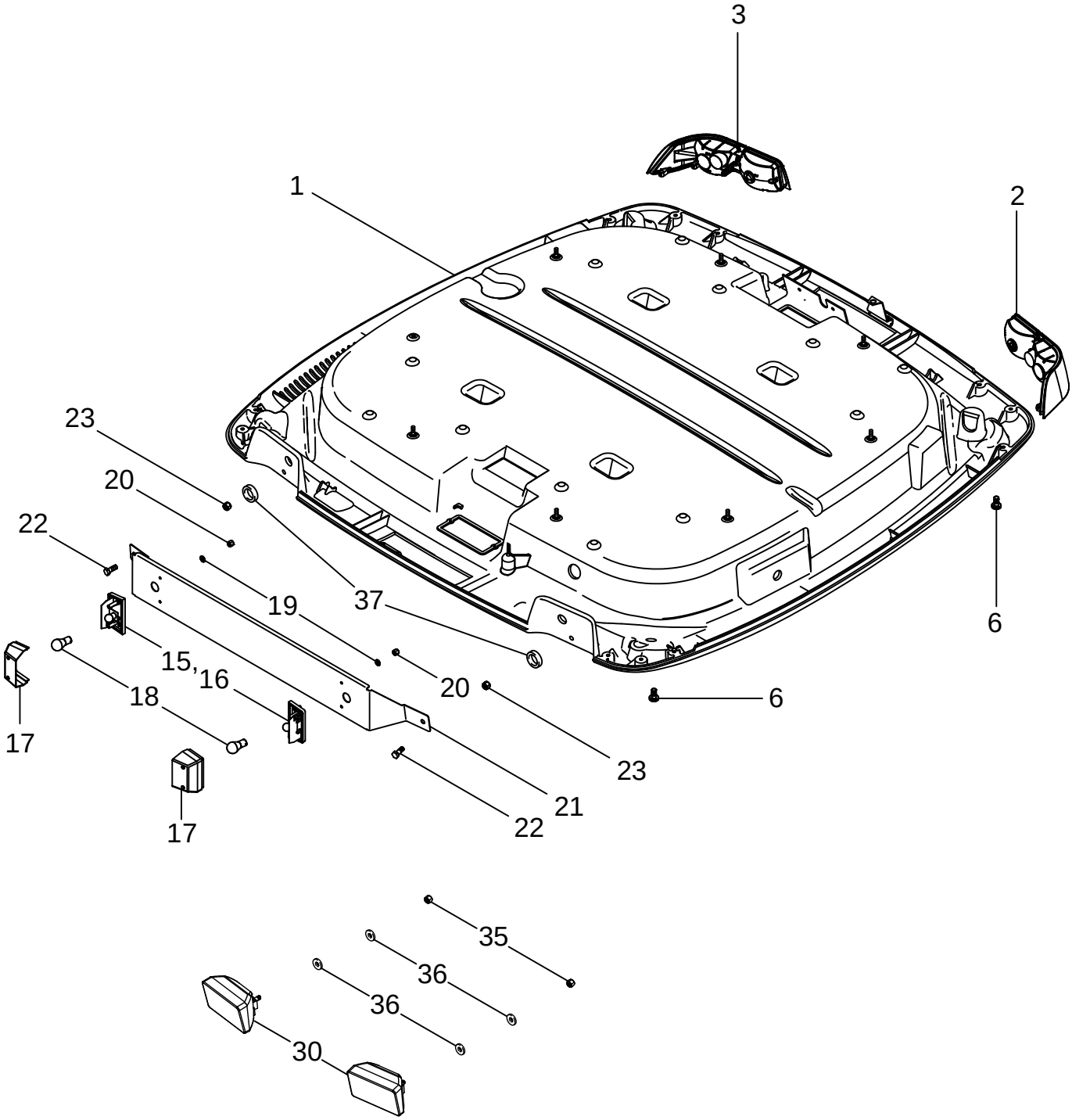

LUCES - TECHO DE LA CABINA
LUZES DO TECTO DA CABINA
LICHTEN - CABINEDAK
LYGTER - FØRERHUSTAG

R	N	P.N.	MOD	Q	Description Denominacion	Descrizione Denominação	Description Beschrijving	Bezeichnung Beskrivelse	L.C.
37		182045A1		2	GROMMET PASACABLES	ANELLO PASSACAVO CASQUILHO ISOLADOR	PASSE-FIL KABELDOORGANG	TÜLLE RING	131A

LAMPS - REAR FENDER AND REMOTE HITCH SWITCH
LUCI - POSTERIORI, PARAFANGO E INTERRUTTORE DI COMANDO A DISTANZA DELL'ATTACCO
FEUX DE GARDE-BOUE ARRIÈRE ET COMMANDE D'ATTELAGE À DISTANCE
LEUCHTEN - HINTERER KOTFLÜGEL UND EXTERNE LAGEREGELUNG FÜR EHR

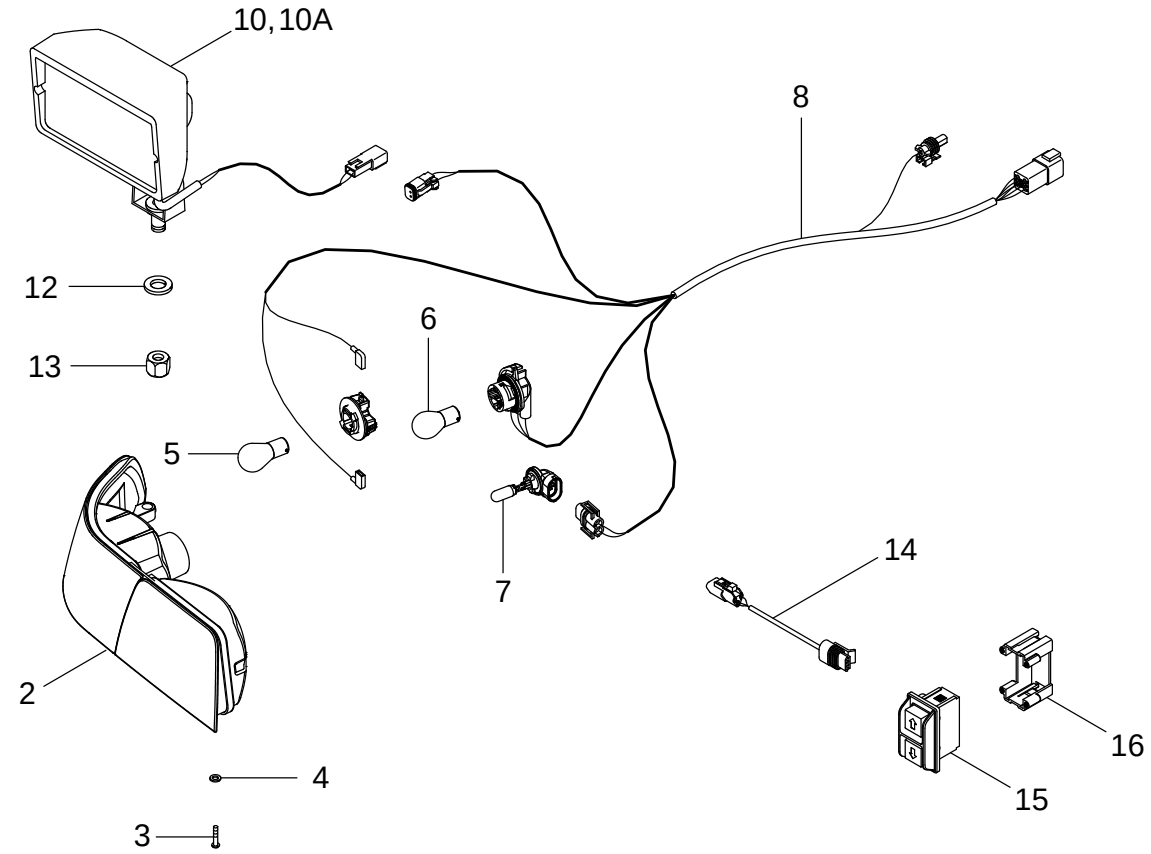

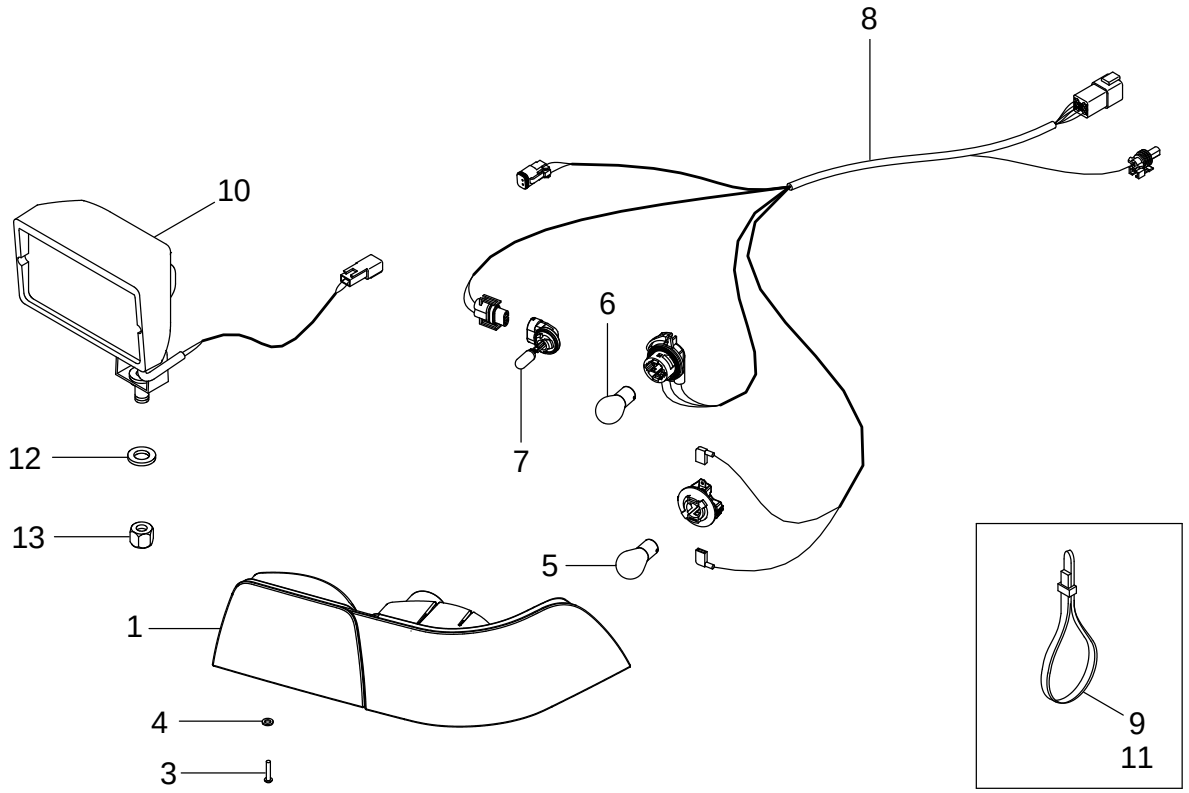

LUCES - GUARDABARROS TRASERO E INTERRUPTOR DE ENGANCHE REMOTO
LUZES DO GUARDA-LAMAS TRASEIRO E DO INTERRUPTOR DE ENGATE REMOTO
LICHTEN - ACHTERSPATBORD EN EXTERNE HEFSCHAKELAAR
LYGTER - BAGSKÆRM OG FJERNTRÆKKONTAKT

R	N	P.N.	MOD	Q	Description Denominacion	Descrizione Denominação	Description Beschrijving	Bezeichnung Beskrivelse	L.C.
1		279226A1		1	LIGHT ASSY. Right Hand, Combination				
						LUCE, COMPLESSIVO	FEU (ASSEMBLE)	LAMPE (KPLT.)	P478
					FARO (CONJ)	FAROL CONJUNTO	LIGHT ASSY.	LIGHT ASSY.	
2		279225A1		1	LIGHT ASSY. Left Hand, Combination				
						LUCE, COMPLESSIVO	FEU (ASSEMBLE)	LAMPE (KPLT.)	P478
					FARO (CONJ)	FAROL CONJUNTO	LIGHT ASSY.	LIGHT ASSY.	
3		840-1612		6	SCREW M6 x 12; 4.8	VITE	VIS	SCHRAUBE	7450
					TORNILLO	PARAFUSO	SCHROEF	SKRUE	
4		895-15006		6	WASHER 6,6 x 25 x 1,6 mm	ROSETTA PIANA	RONDELLE	SCHEIBE	9720
					ARANDELA	ANILHA	SLUITRING	FLADSKIVE	
5		279916A1		2	BULB	LAMPADA	AMPOULE	GLÜHBIRNE	030L
					BOMBILLA	LAMPADA	LAMP	PÆRE	
6		3131227R1		2	BULB 12V, 21W	LAMPADA	AMPOULE	GLÜHBIRNE	030L
					BOMBILLA	LAMPADA	LAMP	PÆRE	
7		323094A1		1	BULB 894-12V	LAMPADA	AMPOULE	GLÜHBIRNE	030L
					BOMBILLA	LAMPADA	LAMP	PÆRE	
8		86991728		2	HARNESS	CABLAGGIO	FAISCEAU	KABELSTRANG	4160
					HAZ	CHICOTE	HARNESS	HARNESS	
9		L11541		AR	STRAP 7 in	BANDELLA	SANGLE	GURT	532B
					BANDA	BANDA	RIEM	STROP	
10	1	431025A1		1-2	LAMP Work Lamp, Right and Left Hand Without HID, Right Hand Only With HID				
						FANALE	LAMPE	LEUCHTE	009F
					FARO	FAROL	LAMP	LYGTE	
10A	1	447501A2		1	ASSEMBLY HID Work Lamp, Left Hand Only				
						GROUPO	ENSEMBLE	ZUSAMMENBAU	Z489
					CONJUNTO	CONJUNTO	ASSEMBLY	ASSEMBLY	
11		347610A1		1	ANCHOR	ANCORAGGIO	PIECE DE FIXATION	VERANKERUNG	0120
					FIJACION	FIXADOR	ANKER	ANKER	
12		896-11012		2	WASHER 13,5 x 24 x 3 mm	ROSETTA PIANA	RONDELLE	SCHEIBE	9720
					ARANDELA	ANILHA	SLUITRING	FLADSKIVE	
13		832-10412		2	NUT M12; 8	DADO	ECROU	MUTTER	010D
					TUERCA	PORCA	MOER	MØTRIK	
14		86994387		2	HARNESS Hitch Switch Extension				
						CABLAGGIO	FAISCEAU	KABELSTRANG	4160
					HAZ	CHICOTE	HARNESS	HARNESS	
15		220415A2		2	SWITCH, REMOTE CONTROL Hitch Remote				
						TELERUTTORE	TELERUPTEUR	FERNBEDIENUNGSSCH/	085T
					TELERRUPTOR	RELE	RELAIS	RELAE	
16		220416A2		2	CONNECTOR, ELECTRIC Hitch Switch Retainer				
						CONNETTORE, ELETTR	FICHE	STOEPSEL	Z339
					TERMINAL	CONECTOR ELETRICO	CONNECTOR, ELECTRIC	CONNECTOR, ELECTRIC	

(1) See Figure 04-31

WORK LAMPS - ROOF AND REAR FENDERS
LUCI DI LAVORO - TETTO E PARAFANGHI POSTERIORI
PROJECTEURS DE TRAVAIL DU TOIT ET DES GARDE-BOUES ARRIÈRE
ARBEITSSCHEINWERFER - KABINENDACH UND HINTERE KOTFLÜGEL

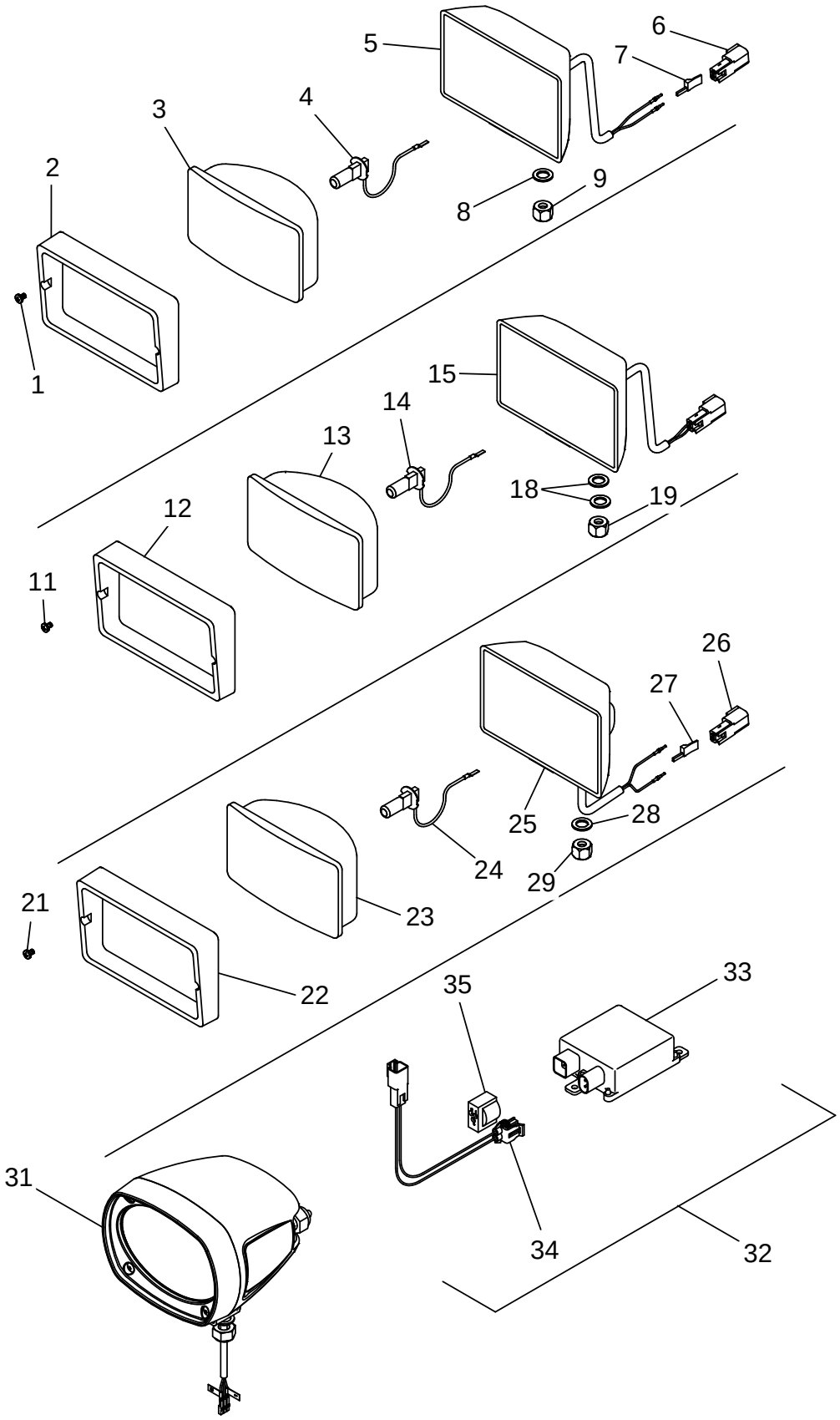

LUCES DE TRABAJO - TECHO Y GUARDABARROS TRASEROS
LUZES DE TRABALHO DO TECTO E GUARDA-LAMAS TRASEIROS
SCHIJNWERPERS - DAK EN ACHTERSPATBORDEN
ARBEJDSLYGTER - TAG OG BAGSKÆRME

R	N	P.N.	MOD	Q	Description Denominacion	Descrizione Denominação	Description Beschrijving	Bezeichnung Beskrivelse	L.C.
		301891A2		1	LAMP Cab Roof Front Work Lamp, Inc. 1 - 5				
						FANALE	LAMPE	LEUCHTE	009F
					FARO	FAROL	LAMP	LYGTE	
1		260-54312		2	SCREW No. 6 x 3/4	VITE	VIS	SCHRAUBE	7450
					TORNILLO	PARAFUSO	SCHROEF	SKRUE	
2		1964806C1		1	BEZEL	MOSTRINA	ENCADREMENT	ZIERRING	123M
					MARCO	CHAPA DE ORNAMENTC	SIERPLAAT	ORNAMENTERING	
3		NSS		1	NOT SERVICED SEPARATELY LENS				
						NON FORNITO SEPARAT	NON FOURNI SEPAREMI	KEIN ERSATZTEIL	064N
					NO SE REPARA SEPARA	NOT SERVICED SEPARA	NIET ALLEEN VERKRIJG	NOT SERVICED SEPARA	
4		1312210C2		1	BULB 12V, 55W	LAMPADA	AMPOULE	GLÜHBIRNE	030L
					BOMBILLA	LAMPADA	LAMP	PÆRE	
5		NSS		1	NOT SERVICED SEPARATELY Base				
						NON FORNITO SEPARAT	NON FOURNI SEPAREMI	KEIN ERSATZTEIL	064N
					NO SE REPARA SEPARA	NOT SERVICED SEPARA	NIET ALLEEN VERKRIJG	NOT SERVICED SEPARA	
6		222136A1		2	CONNECTOR	CONNESSIONE	CONNECTEUR	STECKVERBINDUNG ELI	235C
					CONECTOR	CONECTOR	VERBINDING	STIK	
7		222848A1		2	CONNECTOR Wedge	CONNESSIONE	CONNECTEUR	STECKVERBINDUNG ELI	235C
					CONECTOR	CONECTOR	VERBINDING	STIK	
8		895-18010		2	WASHER 11 x 18 x 1,6 mm	ROSETTA PIANA	RONDELLE	SCHEIBE	9720
					ARANDELA	ANILHA	SLUITRING	FLADSKIVE	
9		832-10410		2	NUT M10; 8	DADO	ECROU	MUTTER	5780
					TUERCA	PORCA	MOER	MØTRIK	
		178345A1		1	LIGHT, WORK Cab Roof Rear Work Lamps, Inc. 11 - 15				
						GRUPPO SPIE, LAVORO	PHARE DE TRAVAIL	ARBEITSSCHEINWERFE	P892
					LUZ DE TRABAJO	FAROL DE TRABALHO	LIGHT, WORK	LIGHT, WORK	
11		260-54312		2	SCREW No. 6 x 3/4	VITE	VIS	SCHRAUBE	7450
					TORNILLO	PARAFUSO	SCHROEF	SKRUE	
12		1964806C1		1	BEZEL	MOSTRINA	ENCADREMENT	ZIERRING	123M
					MARCO	CHAPA DE ORNAMENTC	SIERPLAAT	ORNAMENTERING	
13		276498A1		1	LENS	TRASPARENTE	CABOCHON	STREUSCHEIBE	170T
					TAPA TRANSLUCIDA	ELEMENTO TRANSPARE	TRANSPARENTE	LYGTEGLAS	
14		1312210C2		1	BULB 12V, 55W	LAMPADA	AMPOULE	GLÜHBIRNE	030L
					BOMBILLA	LAMPADA	LAMP	PÆRE	
15		NSS		1	NOT SERVICED SEPARATELY				
						NON FORNITO SEPARAT	NON FOURNI SEPAREMI	KEIN ERSATZTEIL	064N
					NO SE REPARA SEPARA	NOT SERVICED SEPARA	NIET ALLEEN VERKRIJG	NOT SERVICED SEPARA	
18		895-18010		4	WASHER 11 x 18 x 1,6 mm	ROSETTA PIANA	RONDELLE	SCHEIBE	9720
					ARANDELA	ANILHA	SLUITRING	FLADSKIVE	
19		832-10410		2	NUT M10; 8	DADO	ECROU	MUTTER	5780
					TUERCA	PORCA	MOER	MØTRIK	
		431025A1		1-2	LAMP Rear Fender Work Lamp - Non HID, Inc. 21 - 29				
						FANALE	LAMPE	LEUCHTE	009F
					FARO	FAROL	LAMP	LYGTE	
21		260-54312		2	SCREW No. 6 x 3/4	VITE	VIS	SCHRAUBE	7450
					TORNILLO	PARAFUSO	SCHROEF	SKRUE	
22		NSS		1	NOT SERVICED SEPARATELY Bezel				
						NON FORNITO SEPARAT	NON FOURNI SEPAREMI	KEIN ERSATZTEIL	064N
					NO SE REPARA SEPARA	NOT SERVICED SEPARA	NIET ALLEEN VERKRIJG	NOT SERVICED SEPARA	

WORK LAMPS - ROOF AND REAR FENDERS
LUCI DI LAVORO - TETTO E PARAFANGHI POSTERIORI
PROJECTEURS DE TRAVAIL DU TOIT ET DES GARDE-BOUES ARRIÈRE
ARBEITSSCHEINWERFER - KABINENDACH UND HINTERE KOTFLÜGEL

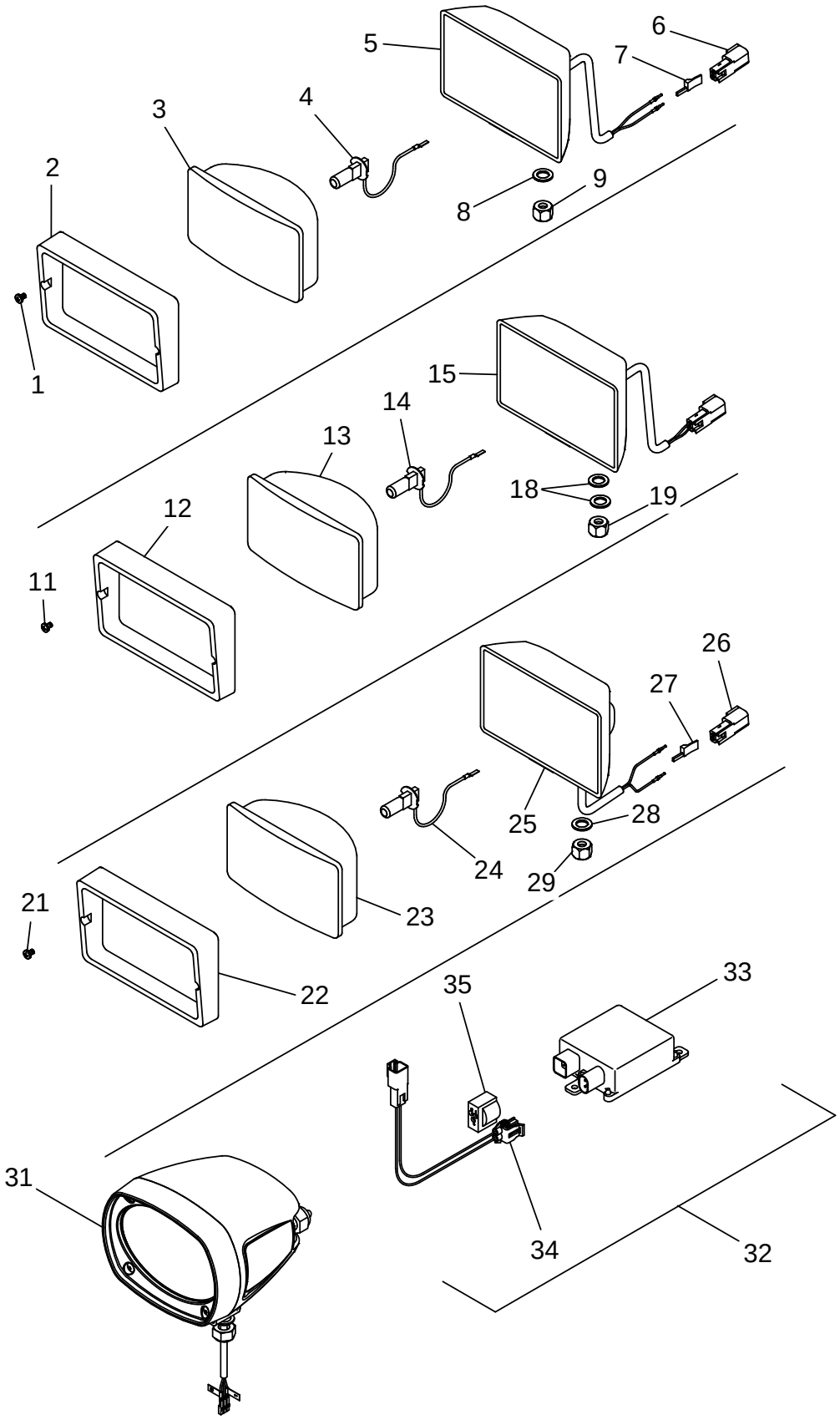

LUCES DE TRABAJO - TECHO Y GUARDABARROS TRASEROS
LUZES DE TRABALHO DO TECTO E GUARDA-LAMAS TRASEIROS
SCHIJNWERPERS - DAK EN ACHTERSPATBORDEN
ARBEJDSLYGTER - TAG OG BAGSKÆRME

R	N	P.N.	MOD	Q	Description Denominacion	Descrizione Denominação	Description Beschrijving	Bezeichnung Beskrivelse	L.C.
23		NSS		1	NOT SERVICED SEPARATELY Lens				
						NON FORNITO SEPARAT	NON FOURNI SEPAREMI	KEIN ERSATZTEIL	064N
					NO SE REPARA SEPARA	NOT SERVICED SEPARA	NIET ALLEEN VERKRIJG	NOT SERVICED SEPARA	
24		1312210C2		1	BULB 12V - 55W	LAMPADA	AMPOULE	GLÜHBIRNE	030L
					BOMBILLA	LAMPADA	LAMP	PÆRE	
25		NSS		1	NOT SERVICED SEPARATELY Base				
						NON FORNITO SEPARAT	NON FOURNI SEPAREMI	KEIN ERSATZTEIL	064N
					NO SE REPARA SEPARA	NOT SERVICED SEPARA	NIET ALLEEN VERKRIJG	NOT SERVICED SEPARA	
26		225315C1		2	CONNECTOR	CONNESSIONE	CONNECTEUR	STECKVERBINDUNG ELI	235C
					CONECTOR	CONECTOR	VERBINDING	STIK	
27		225318C1		2	WEDGE	CUNEE	CALE DE BLOCAGE	UNTERLEGEKEIL	9730
					CUNA	CORTE DE TECIDO	WEDGE	KILE	
28		896-11012		2	WASHER 13,5 x 24 x 3 mm	ROSETTA PIANA	RONDELLE	SCHEIBE	9720
					ARANDELA	ANILHA	SLUITRING	FLADSKIVE	
29		832-10412		2	NUT M12; 8	DADO	ECROU	MUTTER	010D
					TUERCA	PORCA	MOER	MØTRIK	
		447501A2		1	ASSEMBLY Rear Fender HID Work Lamp, Left Hand Only, Inc. 31, 32				
						GROUPO	ENSEMBLE	ZUSAMMENBAU	Z489
					CONJUNTO	CONJUNTO	ASSEMBLY	ASSEMBLY	
31		447754A2		1	LAMP, WORK HID	PROIETTORE POST.	PHARE DE TRAVAIL	ARBEITSSCHEINWERFE	219P
					FARO POSTERIOR	FARO DE TRABAJO	ACHTERSCHIJNWERPEI	ARBEJDSLAMPE	
32		86993698		1	BALLAST Assembly, HID, Inc. 33 - 35				
						ZAVORRA	LESTAGE	BALLAST	A004
					LASTRE	LASTRE	BALLAST	BALLAST	
33		447742A1		1	BALLAST	ZAVORRA	LESTAGE	BALLAST	A004
					LASTRE	LASTRE	BALLAST	BALLAST	
34		86993699		1	CABLE, ELECTRIC Ballast to Rear				
						CAVO ELETTRICO	CABLE ELECTRIQUE	KABEL, ELEKTRISCH	111C
					CABLE ELECTRICO	CABO ELECTRICO	ELECTRISCHE KABEL	EL-KABEL	
35		86993701		1	CONNECTOR 3 Cavity	CONNESSIONE	CONNECTEUR	STECKVERBINDUNG ELI	235C
					CONECTOR	CONECTOR	VERBINDING	STIK	
36		840-1516		3	SCREW M5 x 16 mm, (Not Shown)				
						VITE	VIS	SCHRAUBE	7450
					TORNILLO	PARAFUSO	SCHROEF	SKRUE	
37		892-11005		3	WASHER, LOCK M5, (Not Shown)				
						ROSETTA DI SICUREZZA	RONDELLE FREIN	SPRENGRING	132R
					ARANDELA DE FRENO	ANILHA DE FIXACAO	VEERRING	LAASESKIVE	
38		825-2405		3	NUT M5, (Not Shown)	DADO	ECROU	MUTTER	5780
					TUERCA	PORCA	MOER	MØTRIK	

04-32		p1	12/02

LAMP - BEACON
LUCI - FARO ROTATIVO
GYROPHARE
RUNDUMLEUCHTE

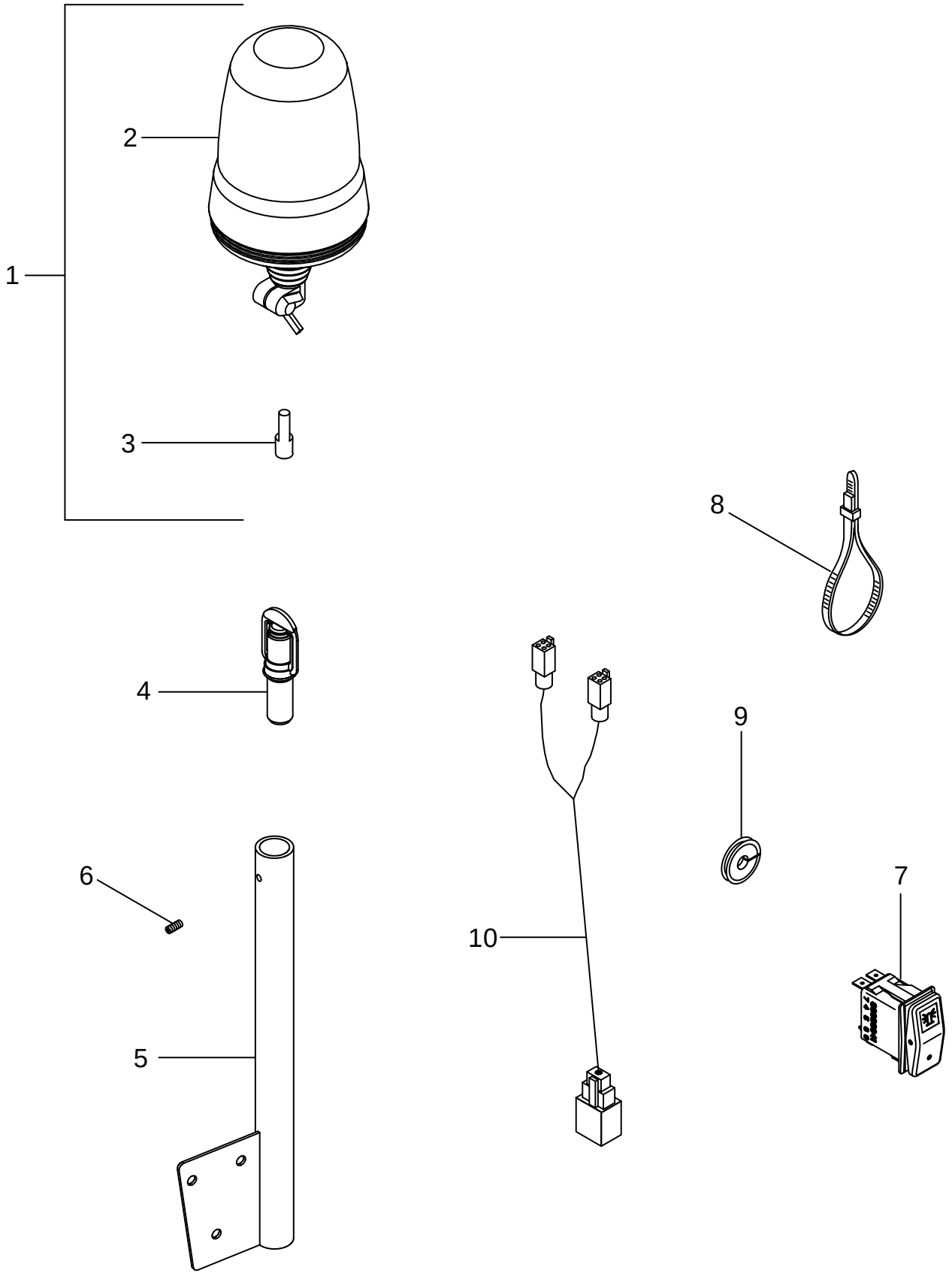

LUCES - FARO GIRATORIO
FAROL ROTATIVO
LAMP - ZWAAILICHT
LYGTE - BLINK

R	N	P.N.	MOD	Q	Description Denominacion	Descrizione Denominação	Description Beschrijving	Bezeichnung Beskrivelse	L.C.
1		175048A1		AR	BEACON, ROTATING Beacon, Inc. 2, 3				
						LUCE ROTANTE	GYROPHARE	RUNDUMLEUCHTE	080L
					LUZ GIRATORIA	FAROL ROTATIVO	ZWAAILICHT	ROTORBLINK	
2		192809A1		1	LENS Amber	TRASPARENTE	CABOCHON	STREUSCHEIBE	170T
					TAPA TRANSLUCIDA	ELEMENTO TRANSPARE	TRANSPARENTE	LYGTEGLAS	
3		3125705R1		1	BULB Beacon	LAMPADA	AMPOULE	GLÜHBIRNE	030L
					BOMBILLA	LAMPADA	LAMP	PÆRE	
4		244106A1		AR	CONNECTOR Adapter	CONNESSIONE	CONNECTEUR	STECKVERBINDUNG ELI	235C
					CONECTOR	CONECTOR	VERBINDING	STIK	
5		450672A1		AR	BRACKET	STAFFA	PATTE FIXATION	HALTERUNG	225S
					PIEZA DE SOPORTE	BRACADEIRA	STEUNBEUGEL	BESLAG	
6		878-1066		AR	SCREW M6 x 6	VITE	VIS	SCHRAUBE	7450
					TORNILLO	PARAFUSO	SCHROEF	SKRUE	
7		86989941		1	SWITCH, LIGHTS	INTERRUTTORE, LUCI	COMM. LUMIERES	LICHTSCHALTER (MZ)	228S
					INTERRUPTOR	INTERRUPTOR	SCHAKELAAR, LICHTEN	LYSKONTAKT	
8		L18337		AR	STRAP	BANDELLA	SANGLE	GURT	532B
					BANDA	BANDA	RIEM	STROP	
9		182045A1		2	GROMMET	ANELLO PASSACAVO	PASSE-FIL	TÜLLE	131A
					PASACABLES	CASQUILHO ISOLADOR	KABELDOORGANG	RING	
10		447666A1		1	HARNESS Dual Beacon Jumper				
						CABLAGGIO	FAISCEAU	KABELSTRANG	4160
					HAZ	CHICOTE	HARNESS	HARNESS	
11		328501A1		AR	HARNESS Adapter	CABLAGGIO	FAISCEAU	KABELSTRANG	4160
					HAZ	CHICOTE	HARNESS	HARNESS	

04-33		p1	12/02

RADIOS, SPEAKERS AND ANTENNAS
RADIO, ALTOPARLANTI E ANTENNE
RADIOS, HAUTS-PARLEURS ET ANTENNES
RADIOS, LAUTSPRECHER UND ANTENNEN

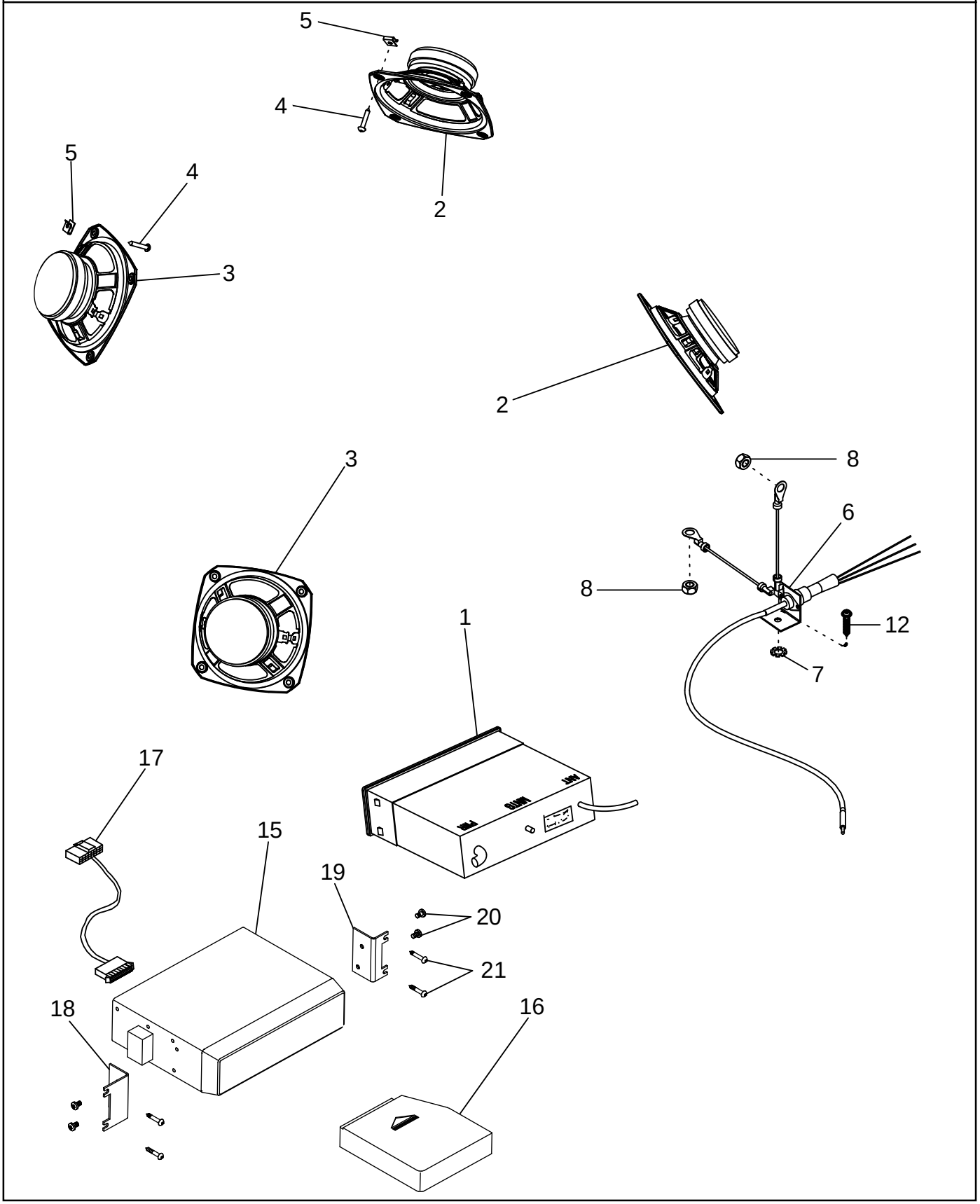

RADIOS, ALTAVOCES Y ANTENAS
RÁDIOS, COLUNAS E ANTENAS
RADIO'S, LUIDSPREKERS EN ANTENNES
RADIOER, HØJTTALERE OG ANTENNER

R	N	P.N.	MOD	Q	Description Denominacion	Descrizione Denominação	Description Beschrijving	Bezeichnung Beskrivelse	L.C.
1		366631A2		1	RADIO AM/FM/WB, If Equipped				
						RADIO	RADIO	RADIO	042R
					RADIO	RADIO	RADIO	RADIO	
1		355623A2		1	RADIO AM/FM Stereo, With Cassette Tape Player, If Equipped				
						RADIO	RADIO	RADIO	042R
					RADIO	RADIO	RADIO	RADIO	
1		325061A2		1	RADIO AM/FM/WB, With Cassette Tape and CD Player, If Equipped				
						RADIO	RADIO	RADIO	042R
					RADIO	RADIO	RADIO	RADIO	
2		258342A2		2	SPEAKER 5-1/4 in Coaxial	ALTOPARLANTE	HAUT-PARLEUR	LAUTSPRECHER	039A
					ALTAVOZ	ALTIFALANTE	LUIDSPREKER	HOEJTALER	
3		258343A2		2	SPEAKER 5-1/4 in Woofer	ALTOPARLANTE	HAUT-PARLEUR	LAUTSPRECHER	039A
					ALTAVOZ	ALTIFALANTE	LUIDSPREKER	HOEJTALER	
4		760-17316		16	SCREW M4,2 x 16	VITE	VIS	SCHRAUBE	7450
					TORNILLO	PARAFUSO	SCHROEF	SKRUE	
5		177269A1		16	NUT	DADO	ECROU	MUTTER	010D
					TUERCA	PORCA	MOER	MØTRIK	
6		409426A3		1	ANTENNA 3-Wire	ANTENNA	ANTENNE	ANTENNE	064A
					ANTENA ELECTRICA	ANTENA ELECTRICA	ANTENNE	ELEKTRISK ANTENNE	
7		893-11008		1	WASHER M8, Antenna Bracket				
						ROSETTA PIANA	RONDELLE	BEILAGSCHEIBE	131R
					ARANDELA	ANILHA	SLUITRING	FLADSKIVE	
8		829-1408		2	NUT M8; 10, Ground Wire	DADO	ECROU	MUTTER	010D
					TUERCA	PORCA	MOER	MØTRIK	
15		317688A1		1	PLAYER, COMPACT DISC 6-Disc, Inc, 16				
						LETTORE CD	LECTEUR DE CD	CD SPIELER	M001
					UNIDAD DE CD	UNIDAD DE CD	CD-SPELARE	CD-SPILLER	
16		317691A1		1	BOX	SCATOLA	BOÎTIER	KISTE	035S
					CAJA	CAIXA	KAST	KASSE	
17		303433A1		1	HARNESS CD Player to Radio				
						CABLAGGIO	FAISCEAU	KABELSTRANG	4160
					HAZ	CHICOTE	HARNESS	HARNESS	
18		355299A2		1	BRACKET Left Hand	STAFFA	PATTE FIXATION	HALTERUNG	225S
					PIEZA DE SOPORTE	BRACADEIRA	STEUNBEUGEL	BESLAG	
19		355298A2		1	BRACKET Right Hand	STAFFA	PATTE FIXATION	HALTERUNG	225S
					PIEZA DE SOPORTE	BRACADEIRA	STEUNBEUGEL	BESLAG	
20		543-702		4	SCREW M5 x 10	VITE	VIS	SCHRAUBE	7450
					TORNILLO	PARAFUSO	SCHROEF	SKRUE	
21		761-17325		4	SCREW M4,2 x 25	VITE	VIS	SCHRAUBE	7450
					TORNILLO	PARAFUSO	SCHROEF	SKRUE	

GROUND SPEED SENSOR
VOLANTE E PIANTONE DI GUIDA
VOLANT ET COLONNE DE DIRECTION
LENKRAD UND LENKSÄULE

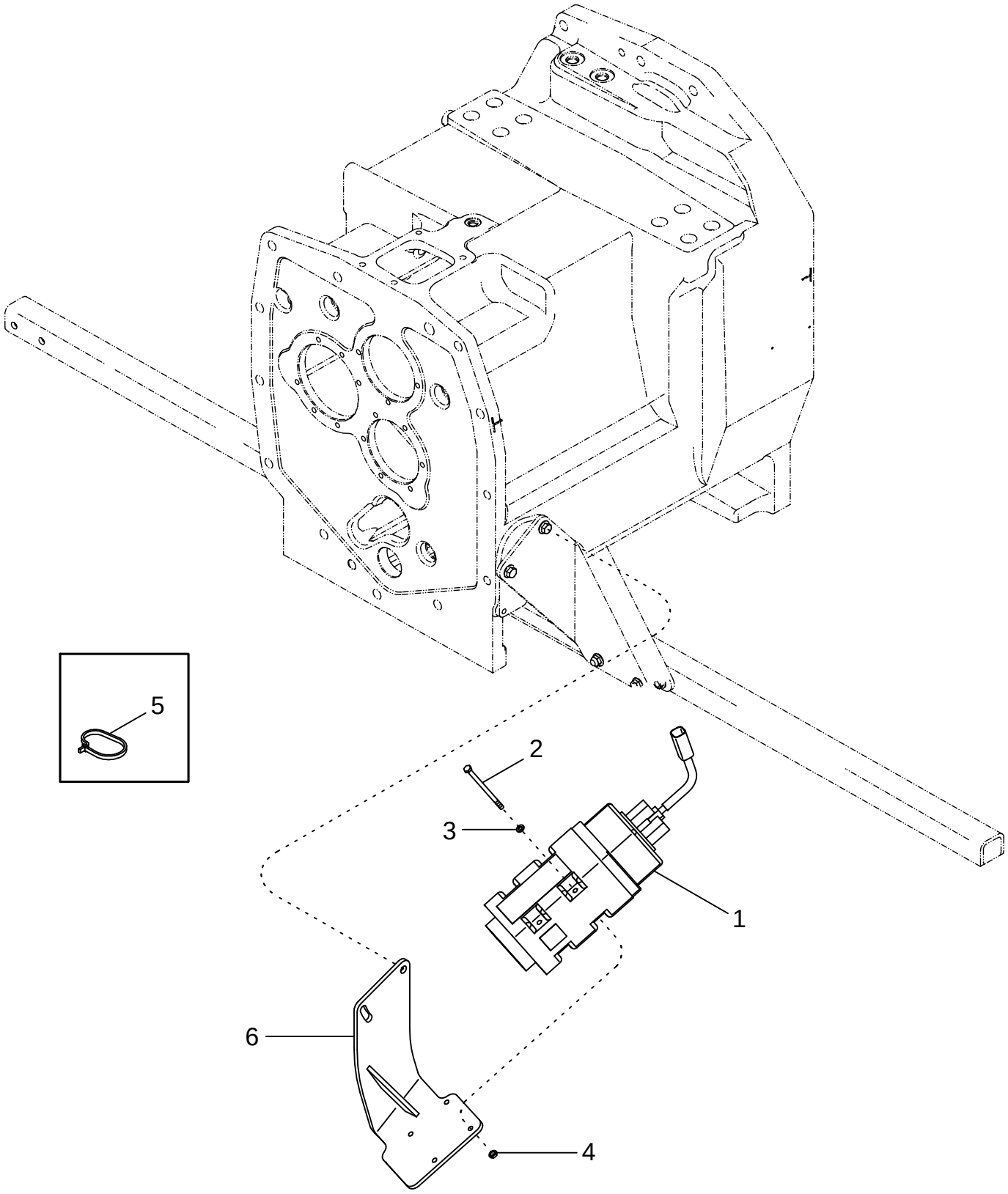

VOLANTE Y COLUMNA
VOLANTE E COLUNA
STUURWIEL EN -KOLOM
RAT OG RATSTAMME

R	N	P.N.	MOD	Q	Description Denominacion	Descrizione Denominação	Description Beschrijving	Bezeichnung Beskrivelse	L.C.
1	1	228760A1		1	RADAR Sensor, True Ground Speed				
						RADAR	RADAR	RADAR	018R
					RADAR	RADAR	RADAR	RADAR	
1	2	228759A1		1	LIMITER, SPEED Sensor, True Ground Speed				
						LIMITATORE, VELOC	LIMITEUR DE VITESSE	DREHZAHLBEGRENZER	Z542
					LIMITADOR, VELOCIDAD	LIMITADOR, VELOCIDAD	LIMITER, SPEED	BEGRÆNS; HASTIGHED	
2		814-6100		4	SCREW M6 x 100	VITE	VIS	SCHRAUBE	7450
					TORNILLO	PARAFUSO	SCHROEF	SKRUE	
3		895-11006		4	WASHER 6,6 x 12 x 1,6 mm	ROSETTA PIANA	RONDELLE	BEILAGSCHEIBE	131R
					ARANDELA	ANILHA	SLUITRING	FLADSKIVE	
4		825-5146		4	NUT M6	DADO	ECROU	MUTTER	5780
					TUERCA	PORCA	MOER	MØTRIK	
5		L18337		1	STRAP 15 in	BANDELLA	SANGLE	GURT	532B
					BANDA	BANDA	RIEM	STROP	
6		412360A2		1	SUPPORT	SUPPORTO	SUPPORT	STÜTZE	300S
					SOPORTE	SUPORTE	STEUN	BESLAG	

(1) Rest Of Europe
(2) United Kingdom

04-35		p1	12/02

IMPLEMENT CONNECTORS AND MOUNTING
GRUPPO DEL PIANTONE DI GUIDA
COLONNE DE DIRECTION
LENKSÄULE

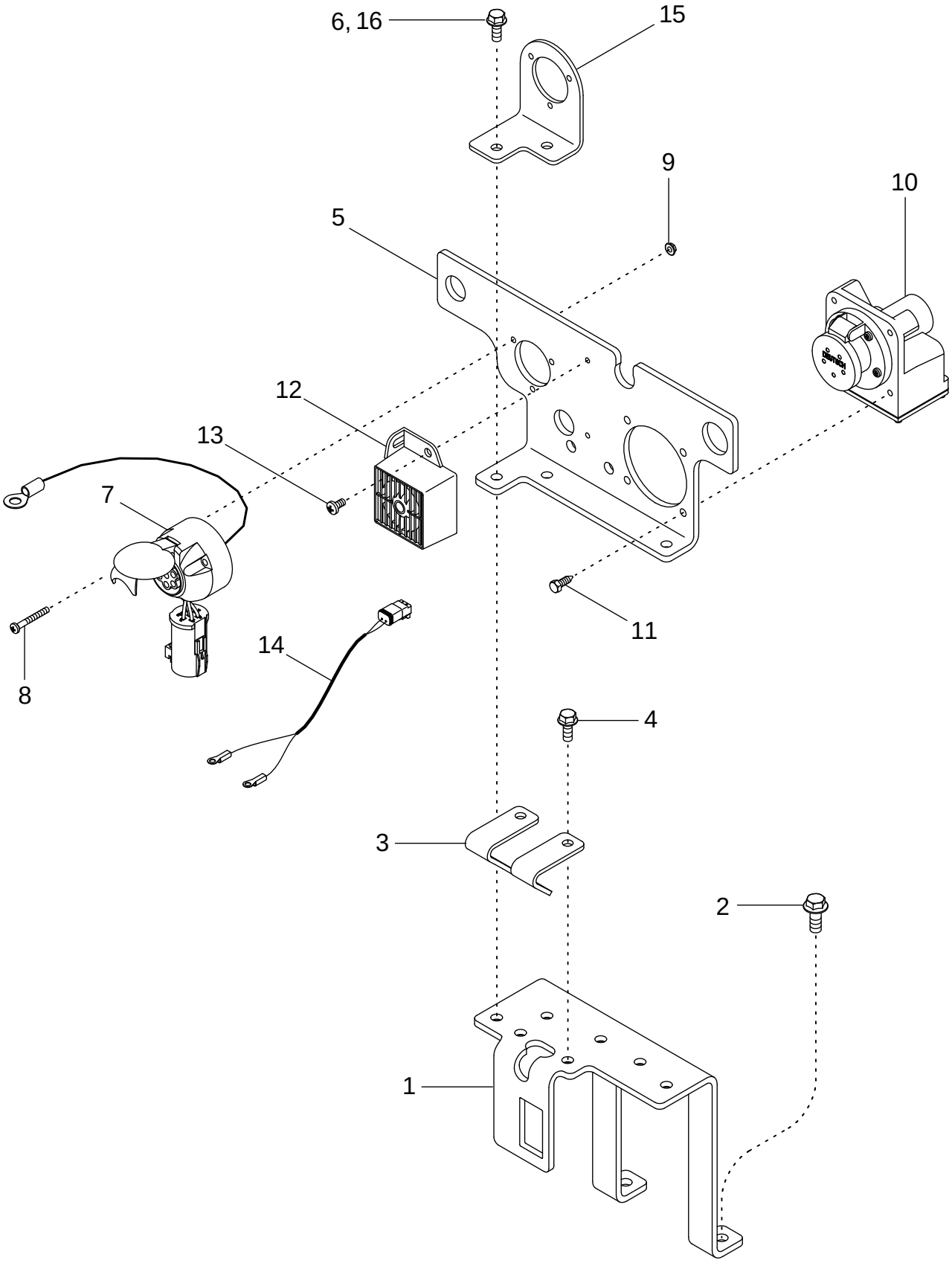

CONJUNTO DE LA COLUMNA DEL VOLANTE
CONJUNTO DA COLUNA DA DIRECÇÃO
STUURKOLOM
RATSTAMMESAMLING

R	N	P.N.	MOD	Q	Description Denominacion	Descrizione Denominação	Description Beschrijving	Bezeichnung Beskrivelse	L.C.
1		297873A3		1	SUPPORT APOYADERO	SUPPORTO SUPORTE	SUPPORT SUPPORT	STUETZE SUPPORT	8790
2		844-10025		2	SCREW M10 x 25; 8.8 TORNILLO	VITE PARAFUSO	VIS SCHROEF	SCHRAUBE SKRUE	P136
3		297767A1		1	SUPPORT APOYADERO	SUPPORTO SUPORTE	SUPPORT SUPPORT	STUETZE SUPPORT	8790
4		844-8020		2	BOLT M8 x 20; 8.8 TORNILLO	BULLONE PARAFUSO	BOULON BOUT	SCHAUBENBOLZEN SKRUE	140B
5		87413188		1	BRACKET, SUPPORTING PIEZA DE APOYO	SQUADRETTA PECA DE SUPORTE	EQUERRE DRAAGARM	SCHALTER, AUTOM. AUS STOETTEBESLAG	215S
6		844-8020		3	BOLT M8 x 20; 8.8 TORNILLO	BULLONE PARAFUSO	BOULON BOUT	SCHAUBENBOLZEN SKRUE	140B
7		87410103		1	SOCKET, POWER 7 Pin ENCHUFFE DE CORRIEN	PRESA DI CORRENTE TOMADA DE CORRENTE	PRISE DE COURANT STOPKONTAKT	STECKDOSE STROEMUDTAG	205P
8		840-1540		3	SCREW M5 x 40 TORNILLO	VITE PARAFUSO	VIS SCHROEF	SCHRAUBE SKRUE	7450
9		825-2405		3	NUT M5 TUERCA	DADO PORCA	ECROU MOER	MUTTER MØTRIK	5780
10		323597A1		1	CONNECTOR Implement CONECTOR	CONNESSIONE CONECTOR	CONNECTEUR VERBINDING	STECKVERBINDUNG ELI STIK	235C
11		779-14619		4	SCREW M6.3 x 19 TORNILLO	VITE PARAFUSO	VIS SCHROEF	SCHRAUBE SKRUE	7450
12		109511A1		1	ALARM Backup Alarm ALARMA	ALLARME ALARME	ALARME ALARM	ALARM ALARM	002A
13		840-1612		2	SCREW M6 x 12; 4.8 TORNILLO	VITE PARAFUSO	VIS SCHROEF	SCHRAUBE SKRUE	7450
14		87403848		1	HARNESS Backup Alarm HAZ	CABLAGGIO CHICOTE	FAISCEAU HARNESS	KABELSTRANG HARNESS	4160
15		86990279		1	SUPPORT With 7 Pin Connector Only SOPORTE	SUPPORTO SUPORTE	SUPPORT STEUN	STÜTZE BESLAG	300S
16		844-8020		2	BOLT M8 x 20; 8.8 TORNILLO	BULLONE PARAFUSO	BOULON BOUT	SCHAUBENBOLZEN SKRUE	140B

SECTION INDEX

05-01	STEERING WHEEL AND COLUMN
05-02	STEERING COLUMN ASSEMBLY
05-03	STEERING SYSTEM - MFD, BSN JAZ126070
05-04	STEERING SYSTEM - MFD, ASN JAZ126070
05-05	HYDRAULIC SYSTEM - MFD DIFFERENTIAL LOCK
05-06	HYDRAULIC SYSTEM - SUSPENDED AXLE
05-07	VALVE ASSY - SUSPENDED MFD AXLE
05-08	FRONT AXLE - MOUNTING, MFD
05-09	FRONT AXLE - SUSPENSION, SUSPENDED MFD
05-10	MFD AXLE HOUSING ASSEMBLY - STANDARD WITH 10 BOLT HUB, WITHOUT DIFFERENTIAL LOCK
05-11	MFD AXLE HOUSING ASSEMBLY - STANDARD WITH 10 BOLT HUB, WITH DIFFERENTIAL LOCK
05-12	MFD AXLE HOUSING ASSEMBLY - STANDARD WITH 12 BOLT HUB, WITH DIFFERENTIAL LOCK
05-13	MFD AXLE HOUSING ASSEMBLY - SUSPENDED WITH 10 BOLT HUB, WITHOUT DIFFERENTIAL LOCK
05-14	MFD AXLE HOUSING ASSEMBLY - SUSPENDED WITH 10 BOLT HUB, WITH DIFFERENTIAL LOCK
05-15	MFD AXLE HOUSING ASSEMBLY - SUSPENDED WITH 12 BOLT HUB, WITH DIFFERENTIAL LOCK
05-16	FRONT AXLE DRIVE SHAFT - MFD, WITHOUT DIFFERENTIAL LOCK
05-17	FRONT AXLE DRIVE SHAFT - MFD, WITH DIFFERENTIAL LOCK
05-18	CARRIER AND DIFFERENTIAL - MFD, 10 BOLT HUB, WITHOUT DIFFERENTIAL LOCK
05-19	CARRIER AND DIFFERENTIAL - MFD, 10 BOLT HUB, WITH DIFFERENTIAL LOCK
05-20	CARRIER AND DIFFERENTIAL - MFD, 12 BOLT HUB, WITH DIFFERENTIAL LOCK
05-21	FRONT AXLE PLANETARIES AND HUB - MFD, 10 BOLT HUB
05-22	FRONT AXLE PLANETARIES AND HUB - MFD, 12 BOLT HUB
05-23	STEERING CYLINDER ASSEMBLY - MFD, 10 BOLT HUB
05-24	STEERING CYLINDER ASSEMBLY - MFD, 12 BOLT HUB
05-25	FRONT WHEELS - MFD, 10 BOLT HUB
05-26	FRONT WHEELS - MFD, 12 BOLT HUB
05-27	SPACER - DUAL FRONT WHEELS

05-01		p1	12/02

STEERING WHEEL AND COLUMN
VOLANTE E PIANTONE DI GUIDA
VOLANT ET COLONNE DE DIRECTION
LENKRAD UND LENKSÄULE

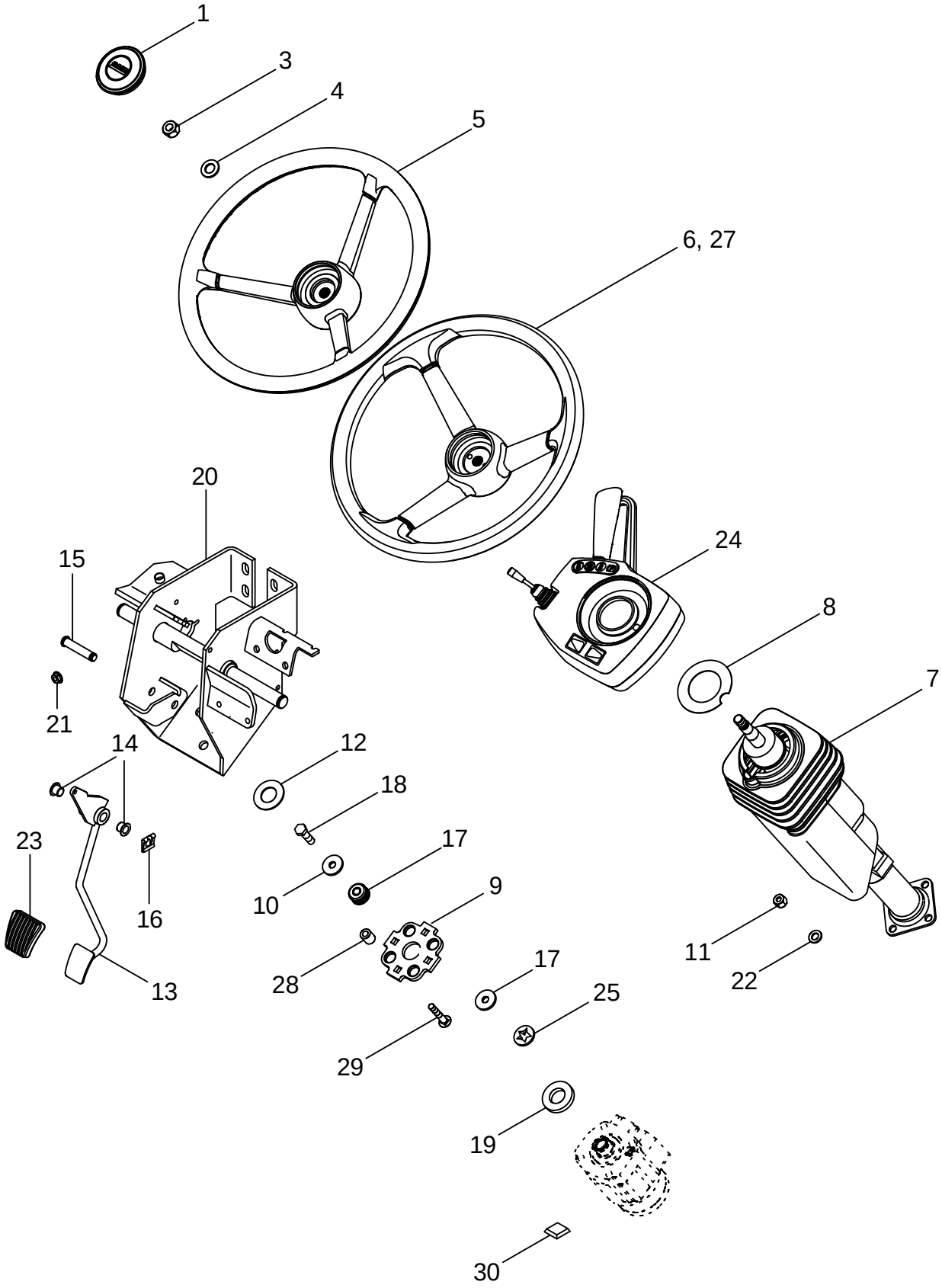

VOLANTE Y COLUMNA
VOLANTE E COLUNA
STUURWIEL EN -KOLOM
RAT OG RATSTAMME

R	N	P.N.	MOD	Q	Description Denominacion	Descrizione Denominação	Description Beschrijving	Bezeichnung Beskrivelse	L.C.
1		361024A3		1	CAP TAPON DEL DEPOSITO	TAPPO SERBATOIO TAMPAO DE RESERVAT	CHAPEAU RESERVOIRDOP	ABDECKAPPE TANKDAEKSEL	1380
3		825-11414		1	NUT M14 TUERCA	DADO PORCA	ECROU MOER	MUTTER MØTRIK	5780
4		895-11014		1	WASHER 15,5 x 28 x 2,5 mm ARANDELA	ROSETTA PIANA ANILHA	RONDELLE SLUITRING	SCHEIBE FLADSKIVE	9720
5	1	224818A3		1	WHEEL (STEERING) VOLANTE DIRECCION	RUOTE DI STERZO VOLANTE DE DIRECAO	VOLANT-DE-DIRECTION WHEEL (STEERING)	LENKRAD WHEEL (STEERING)	P409
6	2	301200A1		1	WHEEL (STEERING) VOLANTE DIRECCION	RUOTE DI STERZO VOLANTE DE DIRECAO	VOLANT-DE-DIRECTION WHEEL (STEERING)	LENKRAD WHEEL (STEERING)	P409
7	3	406697A2		1	STEERING COLUMN COLUMNA DE DIRECCIC	PIANTONE DELLA GUIDA COLUNA DE DIRECCAO	COLONNE DE DIRECTIO STUURKKOLOM	LENKSÄULE RATSTAMME	103P
8		1977448C2		1	WASHER ARANDELA	ROSETTA PIANA ANILHA	RONDELLE SLUITRING	BEILAGSCHEIBE FLADSKIVE	131R
9		366073A1		1	PLATE PLACA	PIASTRA CHAPA	PLAQUE PLAAT	PLATTE PLADE	105P
10		434177A1		4	MOUNTING, RUBBER TEJUELO, GOMA	SUPPORTO, DI GOMMA MONTAGEM DE BORRAC	PALIER CAOUTCHOUC MOUNTING, RUBBER	GUMMIHALTERUNG MOUNTING, RUBBER	P777
11		832-10410		4	NUT M10; 8 TUERCA	DADO PORCA	ECROU MOER	MUTTER MØTRIK	5780
12		307559A1		1	SEAL ANILLO DE CIERRE	ANELLO DI TENUTA ANEL DE VEDACAO	JOINT DICHTINGSRING	DICHTUNG PAKNINGSRING	132A
13		295191A3		1	PEDAL PEDAL	PEDALE PEDAL	PEDALE PEDAAL	PEDAL PEDAL	060P
14		1533540C1		2	EYEBOLT PERNO, OJO	GOLFARE ANEL	BOULON A OEIL OOGBOUT	AUGBOLZEN OEJEBOLT	081G
15		295192A1		1	SHAFT EJE	ALBERO VEIO	ARBRE AS	WELLE AKSEL	016A
16		277059A1		1	CLIP, ELECTRICAL CLIP ELECTRICO	FERMAGLIO, ELETTR. GRAMPO	CLIP CLIP, ELECTRICAL	KABELSTECKSCHUH CLIP, ELECTRICAL	Z327
17		496-81028		8	WASHER 13/32 x 1-1/4 x 1/8 ARANDELA	ROSETTA PIANA ANILHA	RONDELLE SLUITRING	SCHEIBE FLADSKIVE	9720
18		614-10035		4	SCREW M10 x 35; 8,8 TORNILLO	VITE PARAFUSO	VIS SCHROEF	SCHRAUBE SKRUE	7450
19		296775A2		1	SEAL ANILLO DE CIERRE	ANELLO DI TENUTA ANEL DE VEDACAO	JOINT DICHTINGSRING	DICHTUNG PAKNINGSRING	132A
20		401251A4		1	BRACKET PIEZA DE SOPORTE	STAFFA BRACADEIRA	PATTE FIXATION STEUNBEUGEL	HALTERUNG BESLAG	225S
21		825-2408		4	NUT M8 TUERCA	DADO PORCA	ECROU MOER	MUTTER MØTRIK	5780
22		895-11010		4	WASHER 11 x 20 x 2 mm ARANDELA	ROSETTA PIANA ANILHA	RONDELLE SLUITRING	SCHEIBE FLADSKIVE	9720
23		323657A1		1	PAD TACO	TASSELLO ESPACADOR	TAMPON PROP	EINSATZSTÜCK DYVEL	060T

(1) Standard Cab
(2) Deluxe Cab
(3) See Figure 05-02

STEERING WHEEL AND COLUMN
VOLANTE E PIANTONE DI GUIDA
VOLANT ET COLONNE DE DIRECTION
LENKRAD UND LENKSÄULE

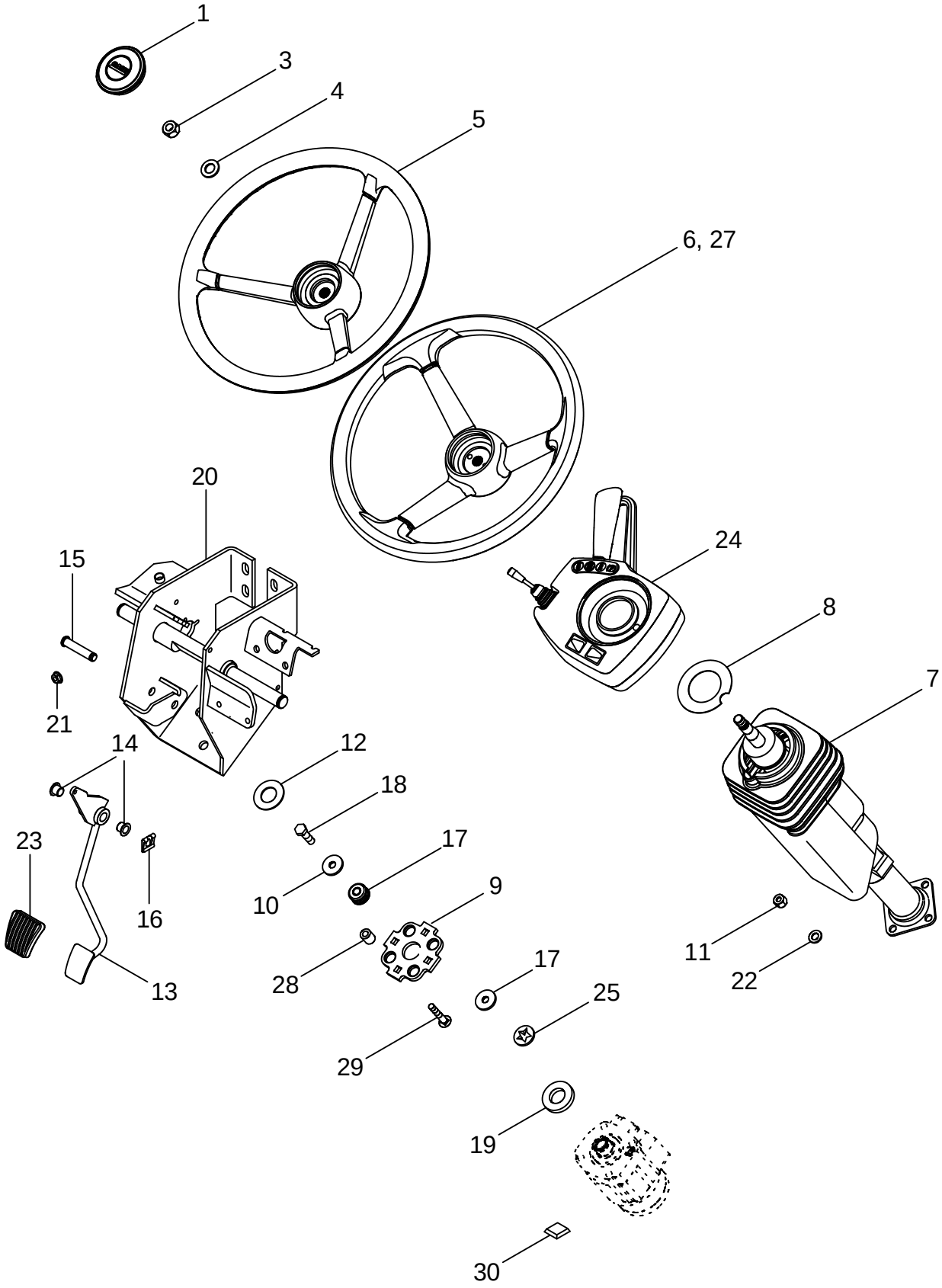

VOLANTE Y COLUMNA
VOLANTE E COLUNA
STUURWIEL EN -KOLOM
RAT OG RATSTAMME

R	N	P.N.	MOD	Q	Description Denominacion	Descrizione Denominação	Description Beschrijving	Bezeichnung Beskrivelse	L.C.
24	1	**86993721**		1	CONTROL MANDO	COMANDO COMANDO	COMMANDE BEDIENING	MONITOR KONTROL	2040
25		**329677A1**		8	RETAINER RETENEDOR	RITEGNO RETENTOR	RETENEUR HOUDER	HALTEVORRICHTUNG HOLDER	109R
27	2	**359033A1**		1	WHEEL (STEERING) VOLANTE DIRECCION	RUOTE DI STERZO VOLANTE DE DIRECAO	VOLANT-DE-DIRECTION WHEEL (STEERING)	LENKRAD WHEEL (STEERING)	P409
28		**295478A1**		4	SPACER SEPARADOR	DISTANZIALE ESPACADOR	ENTRETOISE AFSTANDSRING	DISTANZSTÜCK AFSTANDSSTYKKE	075D
29		**370105A2**		4	BOLT TORNILLO	BULLONE PARAFUSO	BOULON BOUT	SCHAUBENBOLZEN SKRUE	140B
30		**P741441**		4	SPACER SEPARADOR	DISTANZIALE ESPACADOR	ENTRETOISE AFSTANDSRING	DISTANZSTÜCK AFSTANDSSTYKKE	075D

(1) See Figure 06-31
(2) Luxury Cab

STEERING COLUMN ASSEMBLY
GRUPPO DEL PIANTONE DI GUIDA
COLONNE DE DIRECTION
LENKSÄULE

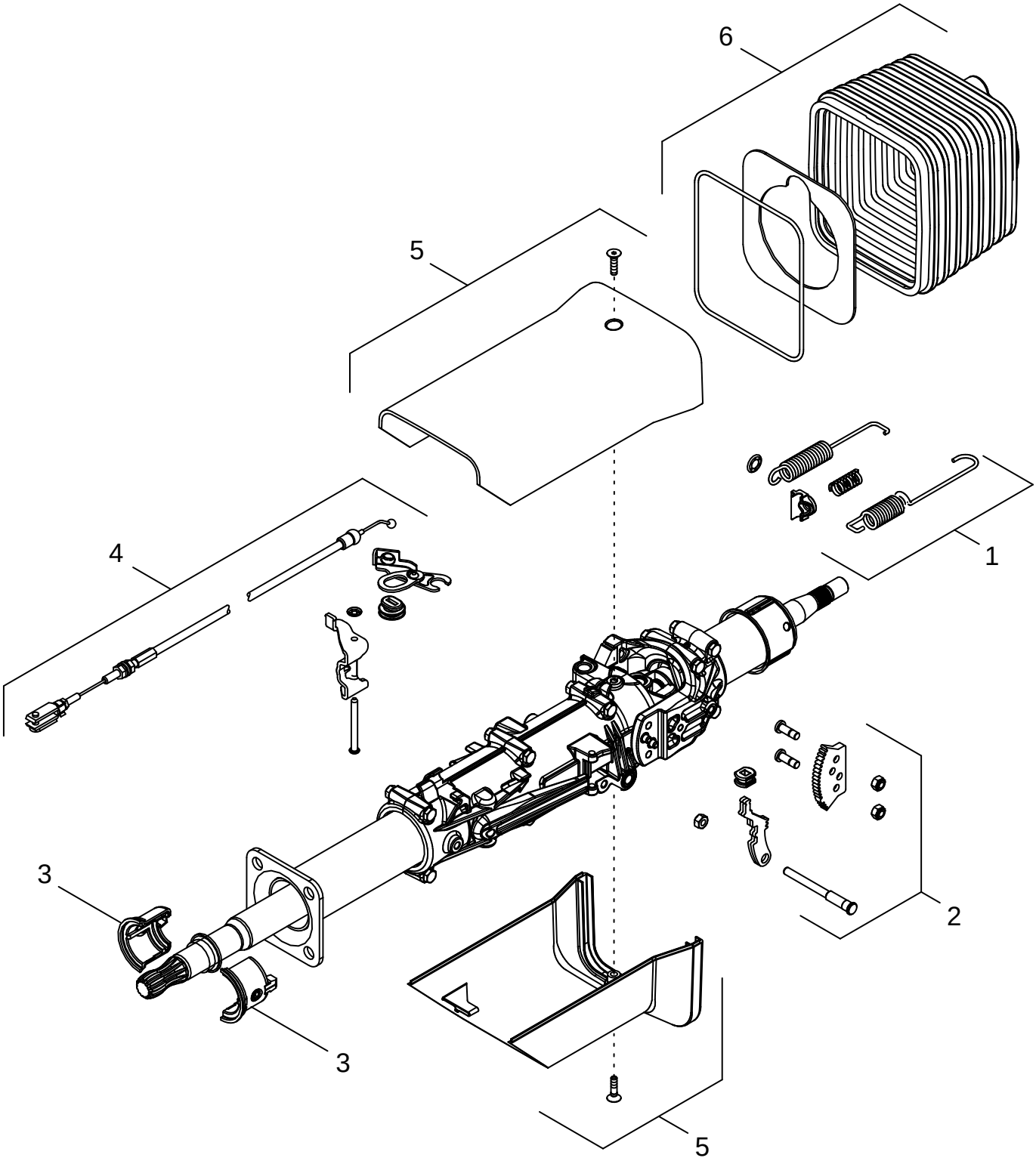

CONJUNTO DE LA COLUMNA DEL VOLANTE
CONJUNTO DA COLUNA DA DIRECÇÃO
STUURKOLOM
RATSTAMMESAMLING

R	N	P.N.	MOD	Q	Description Denominacion	Descrizione Denominação	Description Beschrijving	Bezeichnung Beskrivelse	L.C.
		406697A2		1	STEERING COLUMN Inc. 1 - 6				
						PIANTONE DELLA GUID/	COLONNE DE DIRECTIO	LENKSÄULE	103P
					COLUMNA DE DIRECCIC	COLUNA DE DIRECCAO	STUURKKOLOM	RATSTAMME	
1		**87400095**		1	KIT, SERVICE Springs	KIT ASSISTENZIALE	KIT ASSISTANCE	WARTUNGSSATZ	021K
					KIT, SERVICE	KIT, SERVICE	KIT, SERVICE	SERVICE SAET	
2		**87400096**		1	KIT, SERVICE Tilt Lock	KIT ASSISTENZIALE	KIT ASSISTANCE	WARTUNGSSATZ	021K
					KIT, SERVICE	KIT, SERVICE	KIT, SERVICE	SERVICE SAET	
3		**318934A1**		1	PACKAGE,SERVICE Bearings				
						CONFEZIONE, MANUT.	COLIS POUR RECHANGI	ERSATZPACKUNG	P663
					EMPAQUETADURA	JOGO DE SERVICO(PAC	PACKAGE,SERVICE	PACKAGE,SERVICE	
4		**87400097**		1	KIT, SERVICE Lever	KIT ASSISTENZIALE	KIT ASSISTANCE	WARTUNGSSATZ	021K
					KIT, SERVICE	KIT, SERVICE	KIT, SERVICE	SERVICE SAET	
5		**87400098**		1	KIT, SERVICE Cover	KIT ASSISTENZIALE	KIT ASSISTANCE	WARTUNGSSATZ	021K
					KIT, SERVICE	KIT, SERVICE	KIT, SERVICE	SERVICE SAET	
6		**87400099**		1	KIT, SERVICE Bellows	KIT ASSISTENZIALE	KIT ASSISTANCE	WARTUNGSSATZ	021K
					KIT, SERVICE	KIT, SERVICE	KIT, SERVICE	SERVICE SAET	

05-03		p1	10/04

STEERING SYSTEM - MFD, BSN JAZ126070
IMPIANTO DI STERZO - MFD, BSN JAZ126070
DIRECTION - PONT AVANT MOTEUR, BSN JAZ126070
LENKANLAGE - ALLRADANTRIEB, BSN JAZ126070

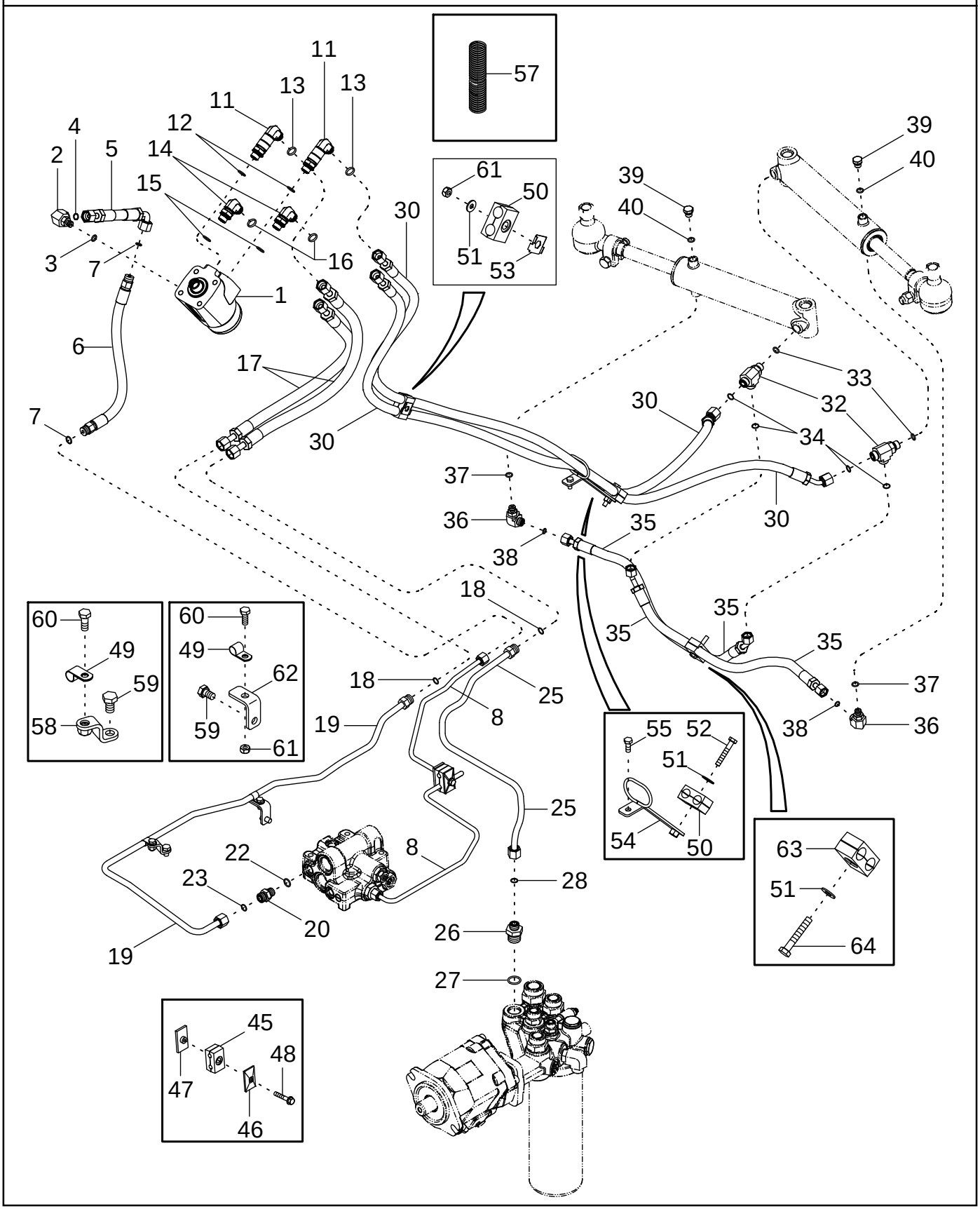

SISTEMA DE DIRECCIÓN - TDM, BSN JAZ126070
SISTEMA DE DIRECÇÃO - TMD, BSN JAZ126070
STUURINRICHTING - MFD, BSN JAZ126070
STYRESYSTEM - MFD, BSN JAZ126070

R	N	P.N.	MOD	Q	Description Denominacion	Descrizione Denominação	Description Beschrijving	Bezeichnung Beskrivelse	L.C.
1	1	445303A1		1	PUMP Steering BOMBA	POMPA BOMBA	POMPE PUMP	PUMPE PUMPE	6570
		396591A1		1	KIT Seal, Steering Pump JEUGO	KIT JOGO	POCHETTE KIT	PACKUNG KIT	4830
1	2	445304A1		1	PUMP Steering BOMBA	POMPA BOMBA	POMPE PUMP	PUMPE PUMPE	6570
		396591A1		1	KIT Seal, Steering Pump JEUGO	KIT JOGO	POCHETTE KIT	PACKUNG KIT	4830
2		700-311		1	ELBOW 11/16 fc sl x 12 Or, Inc. 3, 4 CODO	GOMITO JOELHO	COUDE ELLEBOOG	KNIESTÜCK VINKELRØR	2940
3		637-63093		1	O-RING 9,3 ID x 2,2 JUNTA HERMETICA	ANELLO TOROIDALE ANEL O	JOINT TORIQUE O-RING	O-RING O-RING	7176
4		238-6012		1	O-RING 3/8 ID x 1/16 JUNTA HERMETICA	ANELLO TOROIDALE ANEL O	JOINT TORIQUE O-RING	O-RING O-RING	7176
5		308247A1		1	HOSE MANGA	MANICOTTO FLESSIBILE TUBO FLEXIVEL	FLEXIBLE FLEXIBELE BUIS	SCHLAUCH SLANGE	030M
6		308000A1		1	HOSE MANGA	MANICOTTO FLESSIBILE TUBO FLEXIVEL	FLEXIBLE FLEXIBELE BUIS	SCHLAUCH SLANGE	030M
7		238-6012		2	O-RING 3/8 ID x 1/16 JUNTA HERMETICA	ANELLO TOROIDALE ANEL O	JOINT TORIQUE O-RING	O-RING O-RING	7176
8		451056A1		1	TUBE ASSY. TUBO (CONJUNTO)	TUBO, COMPLESSIVO TUBO CONJUNTO	TUYAUTERIE TUBE ASSY.	ROHRLEITUNG TUBE ASSY.	P465
11		700-381		2	ELBOW 13/16 fc sl x 18 Or, Inc. 12, 13 CODO	GOMITO JOELHO	COUDE ELLEBOOG	KNIESTÜCK VINKELRØR	2940
12		637-63153		1	O-RING 15,3 ID x 2,2 JUNTA HERMETICA	ANELLO TOROIDALE O-RING	JOINT THORIQUE O-RING	DICHTRING O-RING	055A
13		238-6014		1	O-RING 1/2 ID x 1/16 JUNTA HERMETICA	ANELLO TOROIDALE ANEL O	JOINT TORIQUE O-RING	O-RING O-RING	7176
14		700-305		2	ELBOW 13/16 fc sl x 18 Or, Inc. 15, 16 CODO	GOMITO JOELHO	COUDE ELLEBOOG	KNIESTÜCK VINKELRØR	2940
15		637-63153		1	O-RING 15,3 ID x 2,2 JUNTA HERMETICA	ANELLO TOROIDALE O-RING	JOINT THORIQUE O-RING	DICHTRING O-RING	055A
16		238-6014		1	O-RING 1/2 ID x 1/16 JUNTA HERMETICA	ANELLO TOROIDALE ANEL O	JOINT TORIQUE O-RING	O-RING O-RING	7176
17		311852A1		2	HOSE MANGA	MANICOTTO FLESSIBILE TUBO FLEXIVEL	FLEXIBLE FLEXIBELE BUIS	SCHLAUCH SLANGE	030M
18		238-6014		2	O-RING 1/2 ID x 1/16 JUNTA HERMETICA	ANELLO TOROIDALE ANEL O	JOINT TORIQUE O-RING	O-RING O-RING	7176
19		433591A1		1	TUBE ASSY. TUBO (CONJUNTO)	TUBO, COMPLESSIVO TUBO CONJUNTO	TUYAUTERIE TUBE ASSY.	ROHRLEITUNG TUBE ASSY.	P465
20		700-102		1	CONNECTOR, HYD. 13/16 fc sl x 18 Or, Inc. 22, 23 RACOR	RACCORDO IDRAULICO CONECTOR	RACCORD VERBINDING	STUTZEN FORSKRUNING	020R

(1) With 10 Bolt Hub
(2) With 12 Bolt Hub

05-03		p2	10/04

STEERING SYSTEM - MFD, BSN JAZ126070
IMPIANTO DI STERZO - MFD, BSN JAZ126070
DIRECTION - PONT AVANT MOTEUR, BSN JAZ126070
LENKANLAGE - ALLRADANTRIEB, BSN JAZ126070

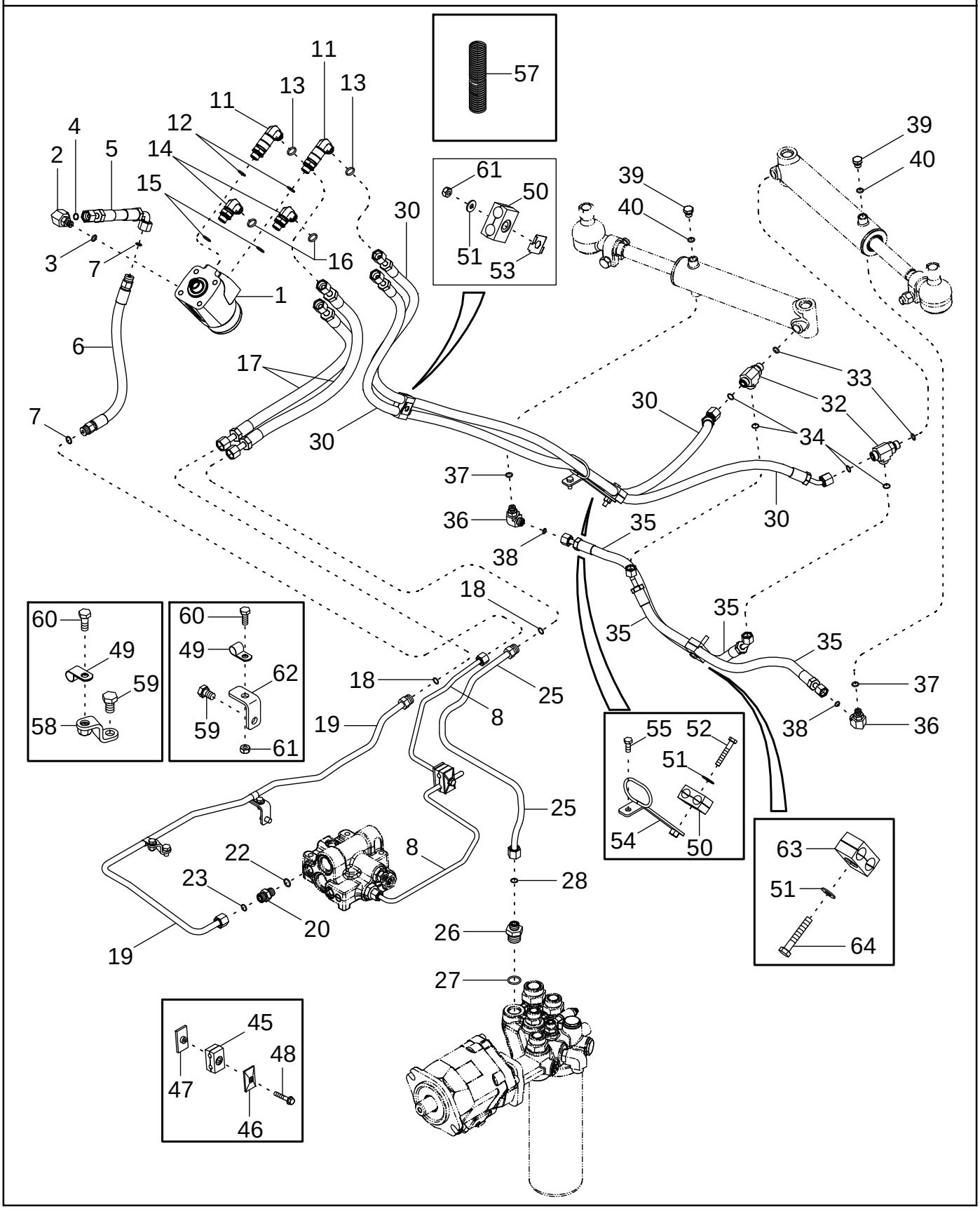

SISTEMA DE DIRECCIÓN - TDM, BSN JAZ126070
SISTEMA DE DIRECÇÃO - TMD, BSN JAZ126070
STUURINRICHTING - MFD, BSN JAZ126070
STYRESYSTEM - MFD, BSN JAZ126070

R	N	P.N.	MOD	Q	Description Denominacion	Descrizione Denominação	Description Beschrijving	Bezeichnung Beskrivelse	L.C.
22		637-63153		1	O-RING 15,3 ID x 2,2 JUNTA HERMETICA	ANELLO TOROIDALE O-RING	JOINT THORIQUE O-RING	DICHTRING O-RING	055A
23		238-6014		1	O-RING 1/2 ID x 1/16 JUNTA HERMETICA	ANELLO TOROIDALE ANEL O	JOINT TORIQUE O-RING	O-RING O-RING	7176
25		437015A1		1	TUBE ASSY. TUBO (CONJUNTO)	TUBO, COMPLESSIVO TUBO CONJUNTO	TUYAUTERIE TUBE ASSY.	ROHRLEITUNG TUBE ASSY.	P465
26		86597761		1	CONNECTOR, HYD. 13/16 fc sl x 27 Or, Inc. 27, 28 RACOR	RACCORDO IDRAULICO CONECTOR	RACCORD VERBINDING	STUTZEN FORSKRUNING	020R
27		637-64236		1	O-RING 23,6 ID x 2,9 JUNTA HERMETICA	ANELLO TOROIDALE ANEL O	JOINT TORIQUE O-RING	O-RING O-RING	7176
28		238-6014		1	O-RING 1/2 ID x 1/16 JUNTA HERMETICA	ANELLO TOROIDALE ANEL O	JOINT TORIQUE O-RING	O-RING O-RING	7176
30		419814A2		2	HOSE ASSY. MANGUERA (CONJUNTO	GRUPPO TUBO FLESS MANGUEIRA CONJUNTO	FLEXIBLE (ASSEMBLE) HOSE ASSY.	SCHLAUCH (KPLT.) HOSE ASSY.	P457
32		700-412		2	TEE 13/16 fc sl x 18 Or, Inc. 33, 34 RACOR-T	PEZZO A T TE	TE TEE	T-STÜCK T-STYKKE	9020
33		637-63153		1	O-RING 15,3 ID x 2,2 JUNTA HERMETICA	ANELLO TOROIDALE O-RING	JOINT THORIQUE O-RING	DICHTRING O-RING	055A
34		238-6014		2	O-RING 1/2 ID x 1/16 JUNTA HERMETICA	ANELLO TOROIDALE ANEL O	JOINT TORIQUE O-RING	O-RING O-RING	7176
35		249817A2		2	HOSE MANGA	MANICOTTO FLESSIBILE TUBO FLEXIVEL	FLEXIBLE FLEXIBELE BUIS	SCHLAUCH SLANGE	030M
36		700-304		2	ELBOW 11/16 fc sl x 14 Or, Inc. 37, 38 CODO	GOMITO JOELHO	COUDE ELLEBOOG	KNIESTÜCK VINKELRØR	2940
37		637-63113		1	O-RING 11,3 ID x 2,2 JUNTA HERMETICA	ANELLO TOROIDALE O-RING	JOINT THORIQUE O-RING	DICHTRING O-RING	055A
38		238-6012		1	O-RING 3/8 ID x 1/16 JUNTA HERMETICA	ANELLO TOROIDALE ANEL O	JOINT TORIQUE O-RING	O-RING O-RING	7176
39		220064A1		2	PLUG M14 - 1,5, Inc. 40 TAPÓN	TAPPO BUJÃO	BOUCHON PLUG	STOPFEN PROP	050T
40		637-63113		1	O-RING 11,3 ID x 2,2 JUNTA HERMETICA	ANELLO TOROIDALE O-RING	JOINT THORIQUE O-RING	DICHTRING O-RING	055A
45		1546024C1		1	CLAMP 2 piece COLLAR	MORSETTO BRACADEIRA	COLLIER CLAMP	SCHELLE CLAMP	1640
46		384870A1		2	PLATE 9 x 20 x 1,6 mm PLACA	PIASTRA CHAPA	PLAQUE PLAAT	PLATTE PLADE	105P
47		384871A1		1	PLATE M8; 10 PLACA	PIASTRA CHAPA	PLAQUE PLAAT	PLATTE PLADE	105P
48		844-8045		1	SCREW M8 x 45; 8.8 TORNILLO	VITE PARAFUSO	VIS SCHROEF	SCHRAUBE SKRUE	7450
49		515-23127		2	CLAMP 1/2 ID COLLAR	MORSETTO BRACADEIRA	COLLIER CLAMP	SCHELLE CLAMP	1640
50		387161A1		2	CLAMP BORNE	MORSETTO BORNE	BRIDE KLEM	KLEMME SPÆNDEBÅND	120M
51		895-15008		3	WASHER 9 x 20 x 1,6 mm ARANDELA	ROSETTA PIANA ANILHA	RONDELLE SLUITRING	SCHEIBE FLADSKIVE	9720

STEERING SYSTEM - MFD, BSN JAZ126070
IMPIANTO DI STERZO - MFD, BSN JAZ126070
DIRECTION - PONT AVANT MOTEUR, BSN JAZ126070
LENKANLAGE - ALLRADANTRIEB, BSN JAZ126070

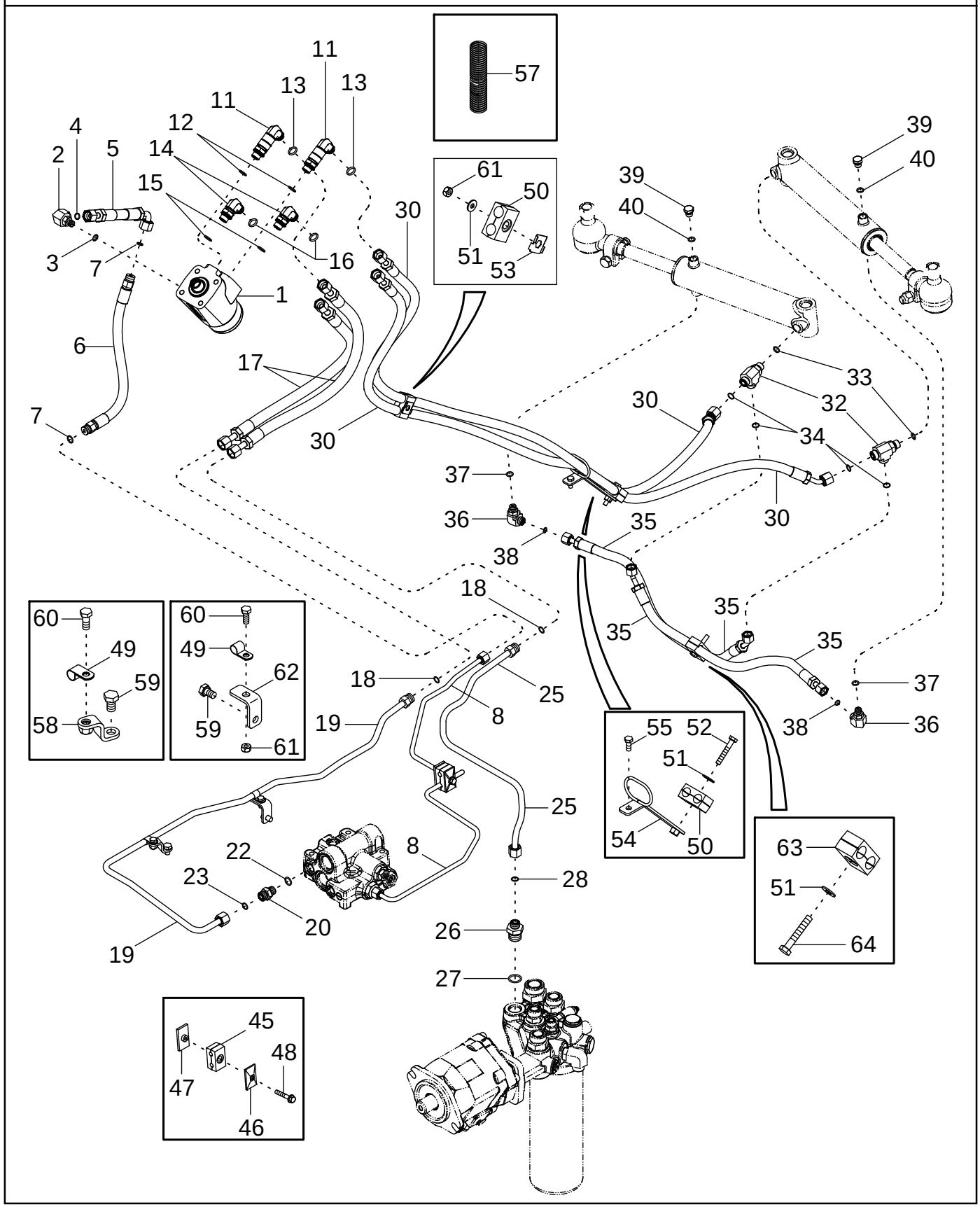

SISTEMA DE DIRECCIÓN - TDM, BSN JAZ126070
SISTEMA DE DIRECÇÃO - TMD, BSN JAZ126070
STUURINRICHTING - MFD, BSN JAZ126070
STYRESYSTEM - MFD, BSN JAZ126070

R	N	P.N.	MOD	Q	Description Denominacion	Descrizione Denominação	Description Beschrijving	Bezeichnung Beskrivelse	L.C.
52		814-8050		1	SCREW M8 x 50; 8,8 TORNILLO	VITE PARAFUSO	VIS SCHROEF	SCHRAUBE SKRUE	P136
53		448560A1		1	PLATE, RETAINING PLACA DE SUJECION	PIASTRA DI FISSAGGIO PLACA DE FIXACAO	PLAQUE DE SERRAGE KLEMPLAAT	KLEMMPLATTE FASTSPAENDINGSPLAD	114P
54		403534A1		1	BRACKET PIEZA DE SOPORTE	STAFFA SUPORTE	PATTE FIXATION STEUNBEUGEL	HALTERUNG BESLAG	1010
55		614-8020		1	SCREW M8 x 20; 8.8 TORNILLO	VITE PARAFUSO	VIS SCHROEF	SCHRAUBE SKRUE	P136
56		408411A1		3	CONDUIT TUBERIA	CONDOTTA CONDUITE	CONDUIT CONDUIT	LEITUNG RENDE	1920
57		408412A1		2	CONDUIT TUBERIA	CONDOTTA CONDUITE	CONDUIT CONDUIT	LEITUNG RENDE	1920
58		86988840		1	BRACKET PIEZA DE SOPORTE	STAFFA BRACADEIRA	PATTE FIXATION STEUNBEUGEL	HALTERUNG BESLAG	225S
59		614-10016		2	SCREW M10 x 16 TORNILLO	VITE PARAFUSO	VIS SCHROEF	SCHRAUBE SKRUE	040V
60		614-8020		2	SCREW M8 x 20; 8.8 TORNILLO	VITE PARAFUSO	VIS SCHROEF	SCHRAUBE SKRUE	P136
61		832-10408		1	NUT Lock, M8; 8 TUERCA	DADO PORCA	ECROU MOER	MUTTER MØTRIK	010D
62		86988838		1	BRACKET PIEZA DE SOPORTE	STAFFA BRACADEIRA	PATTE FIXATION STEUNBEUGEL	HALTERUNG BESLAG	225S
63		387161A1		1	CLAMP BORNE	MORSETTO BORNE	BRIDE KLEM	KLEMME SPÆNDEBÅND	120M
64		814-8050		1	SCREW M8 x 50; 8,8 TORNILLO	VITE PARAFUSO	VIS SCHROEF	SCHRAUBE SKRUE	P136

05-04		p1	11/04

STEERING SYSTEM - MFD, ASN JAZ126070
IMPIANTO DI STERZO - MFD, ASN JAZ126070
DIRECTION - PONT AVANT MOTEUR, ASN JAZ126070
LENKANLAGE - ALLRADANTRIEB, ASN JAZ126070

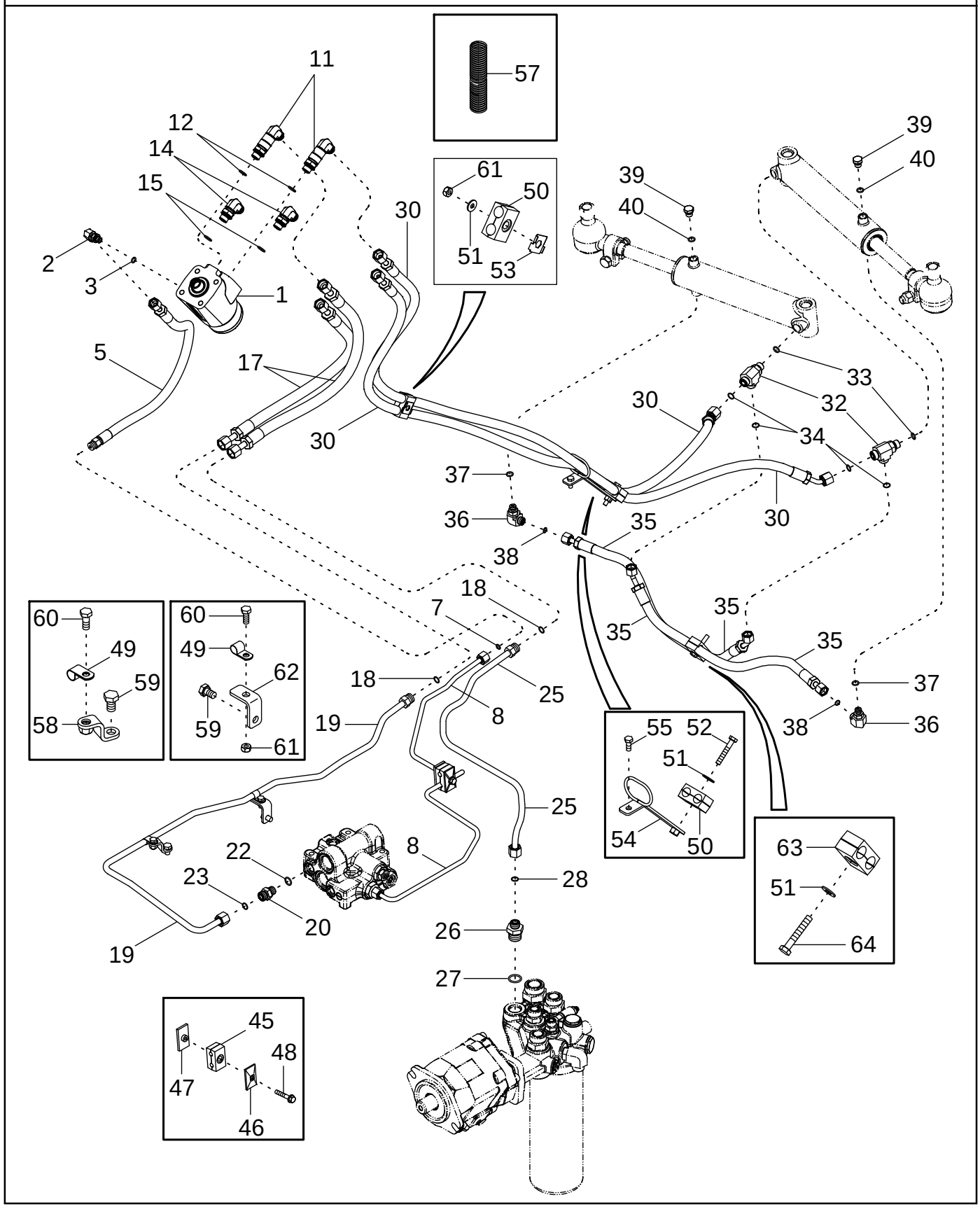

SISTEMA DE DIRECCIÓN - TDM, ASN JAZ126070
SISTEMA DE DIRECÇÃO - TMD, ASN JAZ126070
STUURINRICHTING - MFD, ASN JAZ126070
STYRESYSTEM - MFD, ASN JAZ126070

R	N	P.N.	MOD	Q	Description Denominacion	Descrizione Denominação	Description Beschrijving	Bezeichnung Beskrivelse	L.C.
1	1	445303A1		1	PUMP Steering BOMBA	POMPA BOMBA	POMPE PUMP	PUMPE PUMPE	6570
		396591A1		1	KIT Seal, Steering Pump JEUGO	KIT JOGO	POCHETTE KIT	PACKUNG KIT	4830
1	2	445304A1		1	PUMP Steering BOMBA	POMPA BOMBA	POMPE PUMP	PUMPE PUMPE	6570
		396591A1		1	KIT Seal, Steering Pump JEUGO	KIT JOGO	POCHETTE KIT	PACKUNG KIT	4830
2		87401122		1	ELBOW 11/16 fc sl x 12 Or, Inc. 3 CODO	GOMITO JOELHO	COUDE ELLEBOOG	KNIESTÜCK VINKELROER	085G
3		637-63093		1	O-RING 9,3 ID x 2,2 JUNTA HERMETICA	ANELLO TOROIDALE ANEL O	JOINT TORIQUE O-RING	O-RING O-RING	7176
5		87401120		1	HOSE MANGA	MANICOTTO FLESSIBILE TUBO FLEXIVEL	FLEXIBLE FLEXIBELE BUIS	SCHLAUCH SLANGE	030M
7		238-6012		2	O-RING 3/8 ID x 1/16 JUNTA HERMETICA	ANELLO TOROIDALE ANEL O	JOINT TORIQUE O-RING	O-RING O-RING	7176
8		451056A1	a	1	TUBE ASSY. TUBO (CONJUNTO)	TUBO, COMPLESSIVO TUBO CONJUNTO	TUYAUTERIE TUBE ASSY.	ROHRLEITUNG TUBE ASSY.	P465
8		87440642	b	1	TUBE ASSY. TUBO (CONJUNTO)	TUBO, COMPLESSIVO TUBO CONJUNTO	TUYAUTERIE TUBE ASSY.	ROHRLEITUNG TUBE ASSY.	P465
11		87401124		2	ELBOW 13/16 fc sl x 18 Or, Inc. 12 CODO	GOMITO JOELHO	COUDE ELLEBOOG	KNIESTÜCK VINKELROER	085G
12		637-63153		1	O-RING 15,3 ID x 2,2 JUNTA HERMETICA	ANELLO TOROIDALE O-RING	JOINT THORIQUE O-RING	DICHTRING O-RING	055A
14		87401123		2	ELBOW 13/16 fc sl x 18 Or, Inc. 15 CODO	GOMITO JOELHO	COUDE ELLEBOOG	KNIESTÜCK VINKELROER	085G
15		637-63153		1	O-RING 15,3 ID x 2,2 JUNTA HERMETICA	ANELLO TOROIDALE O-RING	JOINT THORIQUE O-RING	DICHTRING O-RING	055A
17		87401117		2	HOSE MANGA	MANICOTTO FLESSIBILE TUBO FLEXIVEL	FLEXIBLE FLEXIBELE BUIS	SCHLAUCH SLANGE	030M
18		238-6014		2	O-RING 1/2 ID x 1/16 JUNTA HERMETICA	ANELLO TOROIDALE ANEL O	JOINT TORIQUE O-RING	O-RING O-RING	7176
19		433591A1		1	TUBE ASSY. TUBO (CONJUNTO)	TUBO, COMPLESSIVO TUBO CONJUNTO	TUYAUTERIE TUBE ASSY.	ROHRLEITUNG TUBE ASSY.	P465
20		700-102		1	CONNECTOR, HYD. 13/16 fc sl x 18 Or, Inc. 22, 23 RACOR	RACCORDO IDRAULICO CONECTOR	RACCORD VERBINDING	STUTZEN FORSKRUNING	020R
22		637-63153		1	O-RING 15,3 ID x 2,2 JUNTA HERMETICA	ANELLO TOROIDALE O-RING	JOINT THORIQUE O-RING	DICHTRING O-RING	055A
23		238-6014		1	O-RING 1/2 ID x 1/16 JUNTA HERMETICA	ANELLO TOROIDALE ANEL O	JOINT TORIQUE O-RING	O-RING O-RING	7176

(1) With 10 Bolt Hub
(2) With 12 Bolt Hub
(a) BSN AJB0355338
(b) ASN AJB0355338

STEERING SYSTEM - MFD, ASN JAZ126070
IMPIANTO DI STERZO - MFD, ASN JAZ126070
DIRECTION - PONT AVANT MOTEUR, ASN JAZ126070
LENKANLAGE - ALLRADANTRIEB, ASN JAZ126070

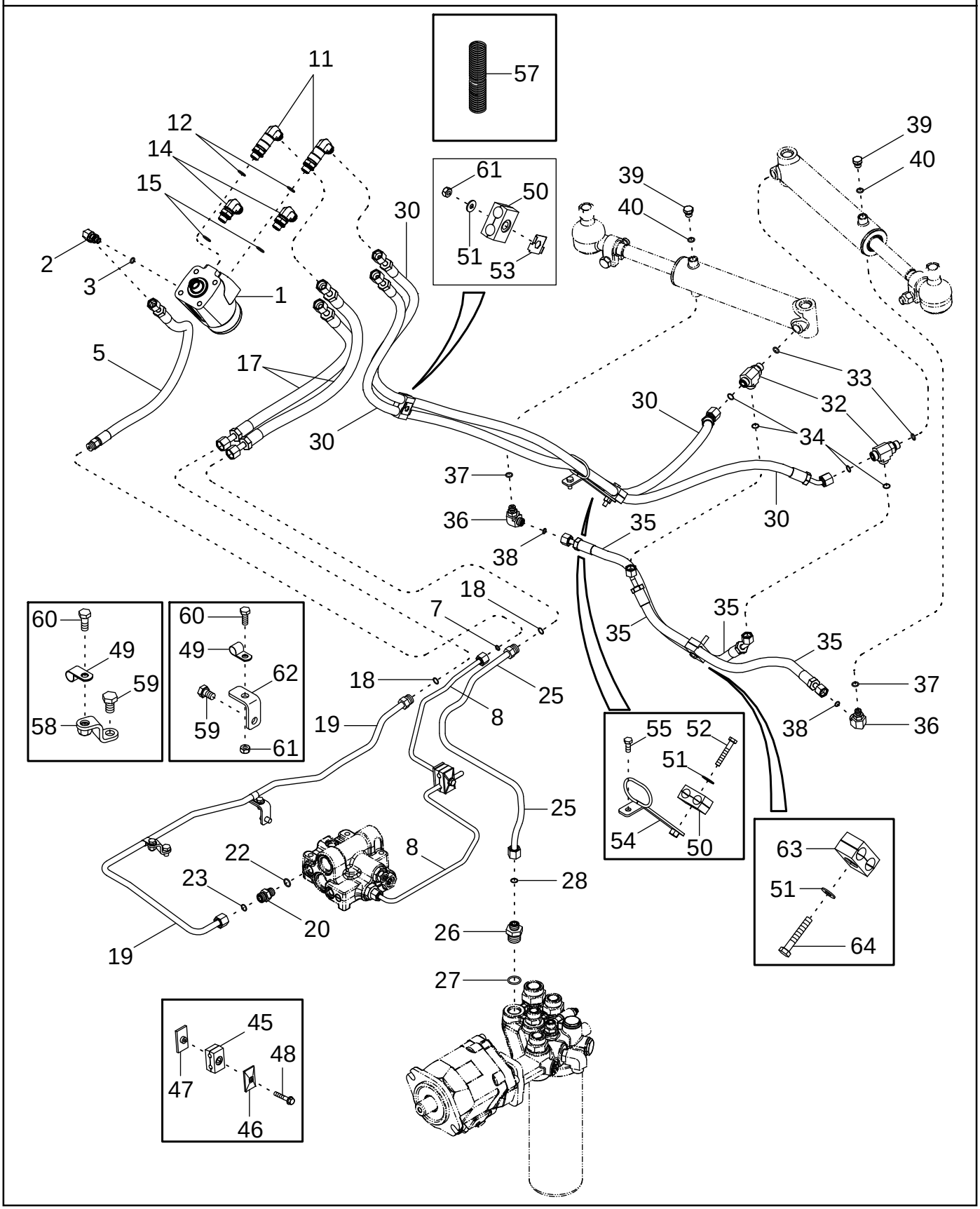

SISTEMA DE DIRECCIÓN - TDM, ASN JAZ126070
SISTEMA DE DIRECÇÃO - TMD, ASN JAZ126070
STUURINRICHTING - MFD, ASN JAZ126070
STYRESYSTEM - MFD, ASN JAZ126070

R	N	P.N.	MOD	Q	Description Denominacion	Descrizione Denominação	Description Beschrijving	Bezeichnung Beskrivelse	L.C.
25		437015A1	a	1	TUBE ASSY. TUBO (CONJUNTO)	TUBO, COMPLESSIVO TUBO CONJUNTO	TUYAUTERIE TUBE ASSY.	ROHRLEITUNG TUBE ASSY.	P465
25		87449707	b	1	TUBE ASSY. TUBO (CONJUNTO)	TUBO, COMPLESSIVO TUBO CONJUNTO	TUYAUTERIE TUBE ASSY.	ROHRLEITUNG TUBE ASSY.	P465
26		86597761		1	CONNECTOR, HYD. 13/16 fc sl x 27 Or, Inc. 27, 28 RACOR	RACCORDO IDRAULICO CONECTOR	RACCORD VERBINDING	STUTZEN FORSKRUNING	020R
27		637-64236		1	O-RING 23,6 ID x 2,9 JUNTA HERMETICA	ANELLO TOROIDALE ANEL O	JOINT TORIQUE O-RING	O-RING O-RING	7176
28		238-6014		1	O-RING 1/2 ID x 1/16 JUNTA HERMETICA	ANELLO TOROIDALE ANEL O	JOINT TORIQUE O-RING	O-RING O-RING	7176
30		87401118		2	HOSE ASSY. MANGUERA (CONJUNTO	GRUPPO TUBO FLESS MANGUEIRA CONJUNTO	FLEXIBLE (ASSEMBLE) HOSE ASSY.	SCHLAUCH (KPLT.) HOSE ASSY.	P457
32		700-412		2	TEE 13/16 fc sl x 18 Or, Inc. 33, 34 RACOR-T	PEZZO A T TE	TE TEE	T-STÜCK T-STYKKE	9020
33		637-63153		1	O-RING 15,3 ID x 2,2 JUNTA HERMETICA	ANELLO TOROIDALE O-RING	JOINT THORIQUE O-RING	DICHTRING O-RING	055A
34		238-6014		2	O-RING 1/2 ID x 1/16 JUNTA HERMETICA	ANELLO TOROIDALE ANEL O	JOINT TORIQUE O-RING	O-RING O-RING	7176
35		249817A2		2	HOSE MANGA	MANICOTTO FLESSIBILE TUBO FLEXIVEL	FLEXIBLE FLEXIBELE BUIS	SCHLAUCH SLANGE	030M
36		700-304		2	ELBOW 11/16 fc sl x 14 Or, Inc. 37, 38 CODO	GOMITO JOELHO	COUDE ELLEBOOG	KNIESTÜCK VINKELRØR	2940
37		637-63113		1	O-RING 11,3 ID x 2,2 JUNTA HERMETICA	ANELLO TOROIDALE O-RING	JOINT THORIQUE O-RING	DICHTRING O-RING	055A
38		238-6012		1	O-RING 3/8 ID x 1/16 JUNTA HERMETICA	ANELLO TOROIDALE ANEL O	JOINT TORIQUE O-RING	O-RING O-RING	7176
39		220064A1		2	PLUG M14 - 1,5, Inc. 40 TAPÓN	TAPPO BUJÃO	BOUCHON PLUG	STOPFEN PROP	050T
40		637-63113		1	O-RING 11,3 ID x 2,2 JUNTA HERMETICA	ANELLO TOROIDALE O-RING	JOINT THORIQUE O-RING	DICHTRING O-RING	055A
45		1546024C1		1	CLAMP 2 piece COLLAR	MORSETTO BRACADEIRA	COLLIER CLAMP	SCHELLE CLAMP	1640
46		384870A1		2	PLATE 9 x 20 x 1,6 mm PLACA	PIASTRA CHAPA	PLAQUE PLAAT	PLATTE PLADE	105P
47		384871A1		1	PLATE M8; 10 PLACA	PIASTRA CHAPA	PLAQUE PLAAT	PLATTE PLADE	105P
48		844-8045		1	SCREW M8 x 45; 8.8 TORNILLO	VITE PARAFUSO	VIS SCHROEF	SCHRAUBE SKRUE	7450
49		515-23127		2	CLAMP 1/2 ID COLLAR	MORSETTO BRACADEIRA	COLLIER CLAMP	SCHELLE CLAMP	1640
50		387161A1		2	CLAMP BORNE	MORSETTO BORNE	BRIDE KLEM	KLEMME SPÆNDEBÅND	120M
51		895-15008		3	WASHER 9 x 20 x 1,6 mm ARANDELA	ROSETTA PIANA ANILHA	RONDELLE SLUITRING	SCHEIBE FLADSKIVE	9720

(a) BSN AJB0355338
(b) ASN AJB0355338

STEERING SYSTEM - MFD, ASN JAZ126070
IMPIANTO DI STERZO - MFD, ASN JAZ126070
DIRECTION - PONT AVANT MOTEUR, ASN JAZ126070
LENKANLAGE - ALLRADANTRIEB, ASN JAZ126070

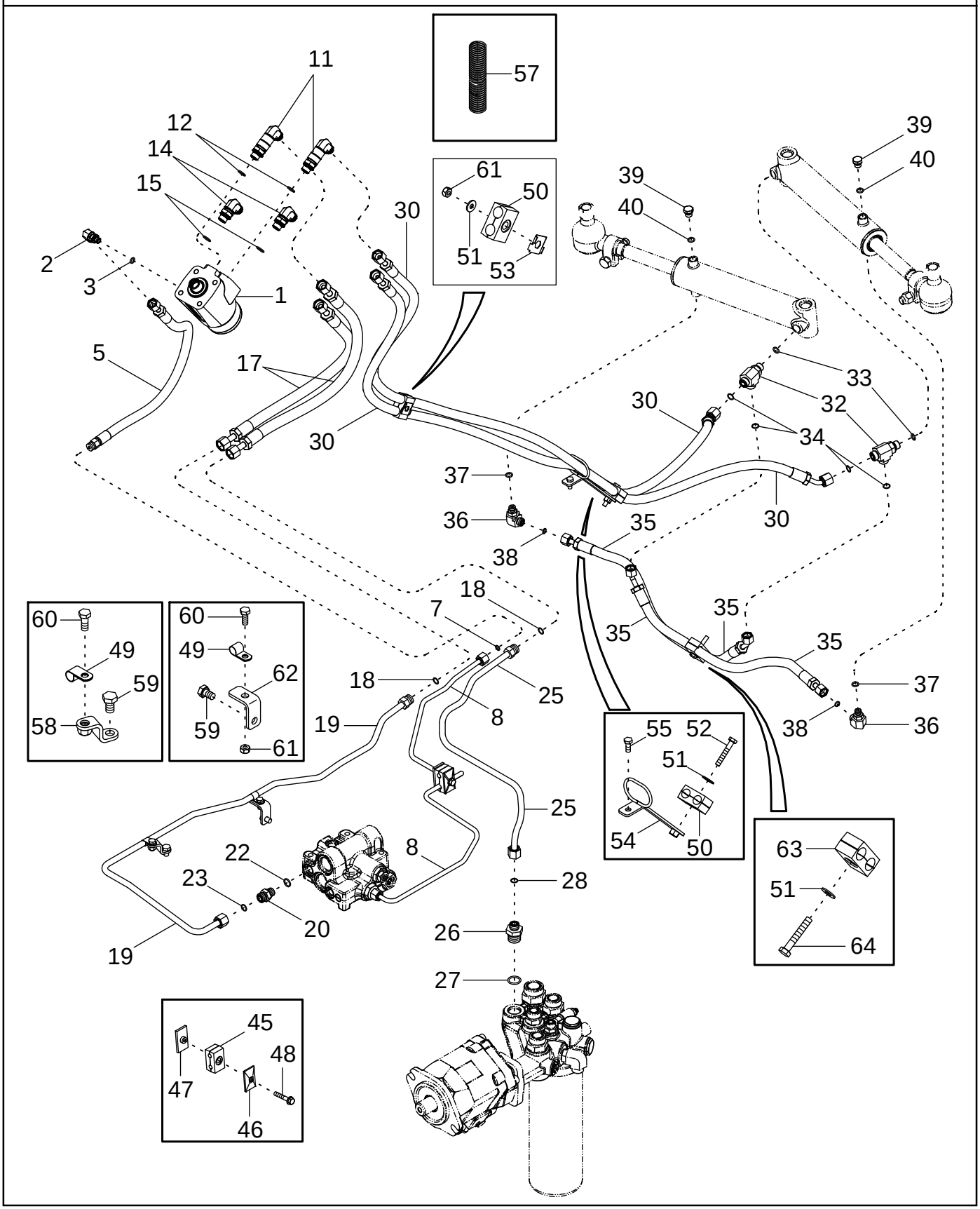

SISTEMA DE DIRECCIÓN - TDM, ASN JAZ126070
SISTEMA DE DIRECÇÃO - TMD, ASN JAZ126070
STUURINRICHTING - MFD, ASN JAZ126070
STYRESYSTEM - MFD, ASN JAZ126070

R	N	P.N.	MOD	Q	Description Denominacion	Descrizione Denominação	Description Beschrijving	Bezeichnung Beskrivelse	L.C.
52		814-8050		1	SCREW M8 x 50; 8,8 TORNILLO	VITE PARAFUSO	VIS SCHROEF	SCHRAUBE SKRUE	P136
53		448560A1		1	PLATE, RETAINING PLACA DE SUJECION	PIASTRA DI FISSAGGIO PLACA DE FIXACAO	PLAQUE DE SERRAGE KLEMPLAAT	KLEMMPLATTE FASTSPAENDINGSPLAD	114P
54		403534A2		1	BRACKET PIEZA DE SOPORTE	STAFFA BRACADEIRA	PATTE FIXATION STEUNBEUGEL	HALTERUNG BESLAG	225S
55		614-8020		1	SCREW M8 x 20; 8.8 TORNILLO	VITE PARAFUSO	VIS SCHROEF	SCHRAUBE SKRUE	P136
56		408411A1		3	CONDUIT TUBERIA	CONDOTTA CONDUITE	CONDUIT CONDUIT	LEITUNG RENDE	1920
57		408412A1		2	CONDUIT TUBERIA	CONDOTTA CONDUITE	CONDUIT CONDUIT	LEITUNG RENDE	1920
58		86988840		1	BRACKET PIEZA DE SOPORTE	STAFFA BRACADEIRA	PATTE FIXATION STEUNBEUGEL	HALTERUNG BESLAG	225S
59		614-10016		2	SCREW M10 x 16 TORNILLO	VITE PARAFUSO	VIS SCHROEF	SCHRAUBE SKRUE	040V
60		614-8020		2	SCREW M8 x 20; 8.8 TORNILLO	VITE PARAFUSO	VIS SCHROEF	SCHRAUBE SKRUE	P136
61		832-10408		1	NUT Lock, M8; 8 TUERCA	DADO PORCA	ECROU MOER	MUTTER MØTRIK	010D
62		86988838		1	BRACKET PIEZA DE SOPORTE	STAFFA BRACADEIRA	PATTE FIXATION STEUNBEUGEL	HALTERUNG BESLAG	225S
63		387161A1	a	1	CLAMP BORNE	MORSETTO BORNE	BRIDE KLEM	KLEMME SPÆNDEBÅND	120M
63		118576A1	b	1	CLAMP GRAPON	MORSETTO BRACADEIRA	CRAMPON CLAMP	KRAMPE CLAMP	Z458
64		814-8050	a	1	SCREW M8 x 50; 8,8 TORNILLO	VITE PARAFUSO	VIS SCHROEF	SCHRAUBE SKRUE	P136
64		814-8055	b	1	SCREW M8 x 55; 8,8 TORNILLO	VITE PARAFUSO	VIS SCHROEF	SCHRAUBE SKRUE	7450

(a) BSN JAZ128233
(b) ASN JAZ128233

HYDRAULIC SYSTEM - MFD DIFFERENTIAL LOCK
IMPIANTO IDRAULICO - BLOCCAGGIO DEL DIFFERENZIALE MFD
CIRCUIT HYDRAULIQUE - BLOCAGE DU DIFFÉRENTIEL DU PONT AVANT
HYDRAULIKANLAGE - ALLRADANTRIEBS-DIFFERENTIALSPERRE

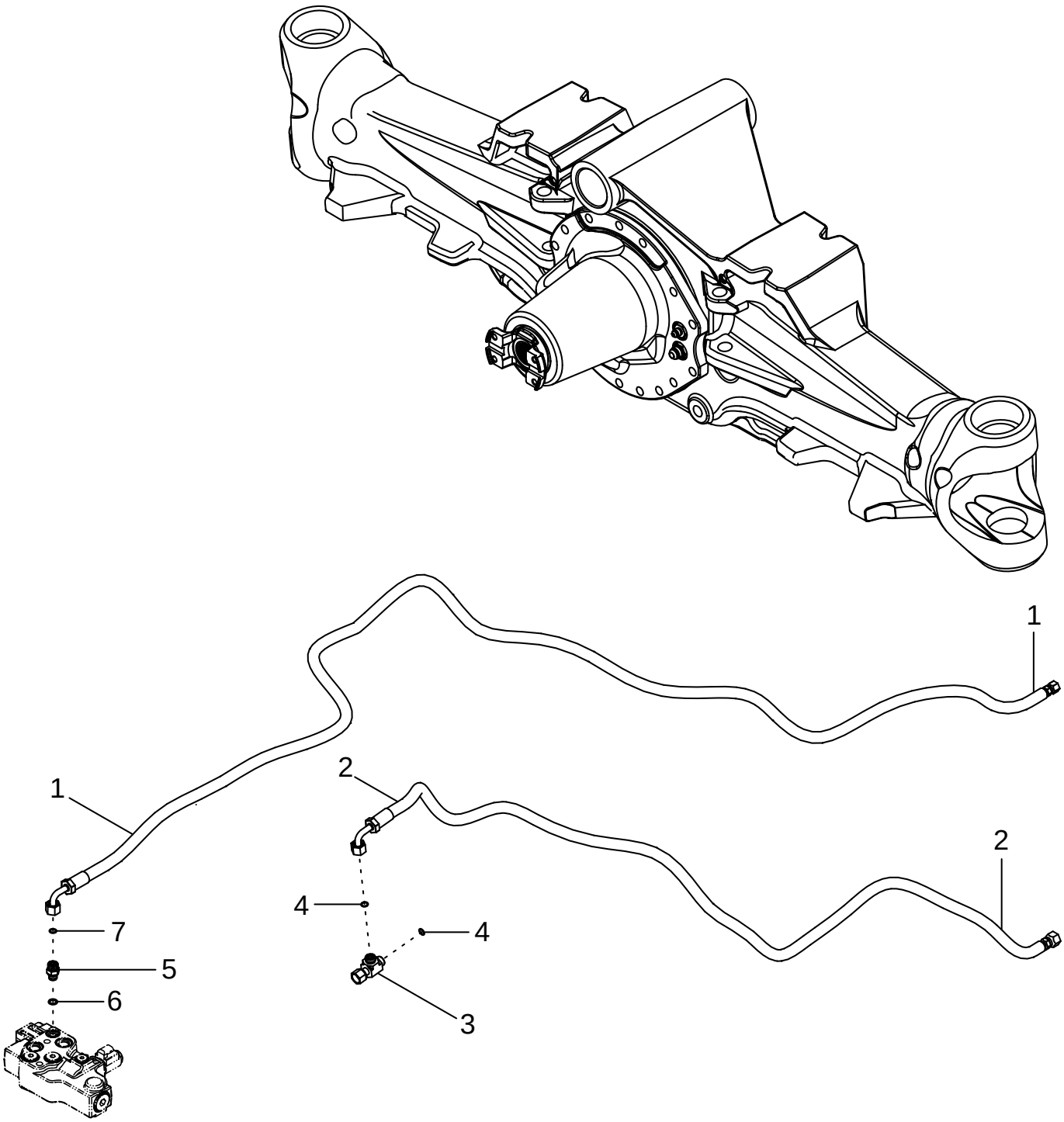

SISTEMA HIDRÁULICO - BLOQUEO DEL DIFERENCIAL DE LA TDM
SISTEMA HIDRÁULICO - TRANCA DO DIFERENCIAL DA TMD
HYDRAULISCH SYSTEEM - DIFFERENTIEELVERGRENDELING MFD
HYDRAULIKSYSTEM - MFD DIFFERENTIALESPÆRRE

R	N	P.N.	MOD	Q	Description Denominacion	Descrizione Denominação	Description Beschrijving	Bezeichnung Beskrivelse	L.C.
1		414556A2		1	HOSE ASSY. Supply MANGUERA (CONJUNTO	GRUPPO TUBO FLESS MANGUEIRA CONJUNTO	FLEXIBLE (ASSEMBLE) HOSE ASSY.	SCHLAUCH (KPLT.) HOSE ASSY.	P457
2		428609A2	a	1	HOSE ASSY. Return MANGUERA (CONJUNTO	GRUPPO TUBO FLESS MANGUEIRA CONJUNTO	FLEXIBLE (ASSEMBLE) HOSE ASSY.	SCHLAUCH (KPLT.) HOSE ASSY.	P457
2		87445145	b	1	HOSE ASSY. Return MANGUERA (CONJUNTO	GRUPPO TUBO FLESS MANGUEIRA CONJUNTO	FLEXIBLE (ASSEMBLE) HOSE ASSY.	SCHLAUCH (KPLT.) HOSE ASSY.	P457
3		701-422	a	1	TEE 11/16 fc sl x 11/16 sw, Inc. 4 RACOR-T	PEZZO A T TE	TE TEE	T-STÜCK T-STYKKE	9020
3		701-416	b	1	TEE 13/16 fc sl x 13/16 sw, Inc. 4 RACOR-T	PEZZO A T TE	TE TEE	T-STÜCK T-STYKKE	9020
4		238-6012	a	2	O-RING 3/8 ID x 1/16 JUNTA HERMETICA	ANELLO TOROIDALE ANEL O	JOINT TORIQUE O-RING	O-RING O-RING	7176
4		238-6014	b	2	O-RING 1/2 ID x 1/16 JUNTA HERMETICA	ANELLO TOROIDALE ANEL O	JOINT TORIQUE O-RING	O-RING O-RING	7176
5		700-101		1	CONNECTOR, HYD. 11/16 fc sl x 14 Or, Inc. 6,7 RACOR	RACCORDO IDRAULICO CONECTOR	RACCORD VERBINDING	STUTZEN FORSKRUNING	020R
6		637-63113		1	O-RING 11,3 ID x 2,2 JUNTA HERMETICA	ANELLO TOROIDALE O-RING	JOINT THORIQUE O-RING	DICHTRING O-RING	055A
7		238-6012		1	O-RING 3/8 ID x 1/16 JUNTA HERMETICA	ANELLO TOROIDALE ANEL O	JOINT TORIQUE O-RING	O-RING O-RING	7176

(a) BSN AJB0304631
(b) ASN AJB0304631

05-06		p1	11/04

HYDRAULIC SYSTEM - SUSPENDED AXLE
IMPIANTO IDRAULICO - ASSALE SOSPESO
CIRCUIT HYDRAULIQUE - ESSIEU SUSPENDU
HYDRAULIKANLAGE FÜR GEFEDERTE ACHSE

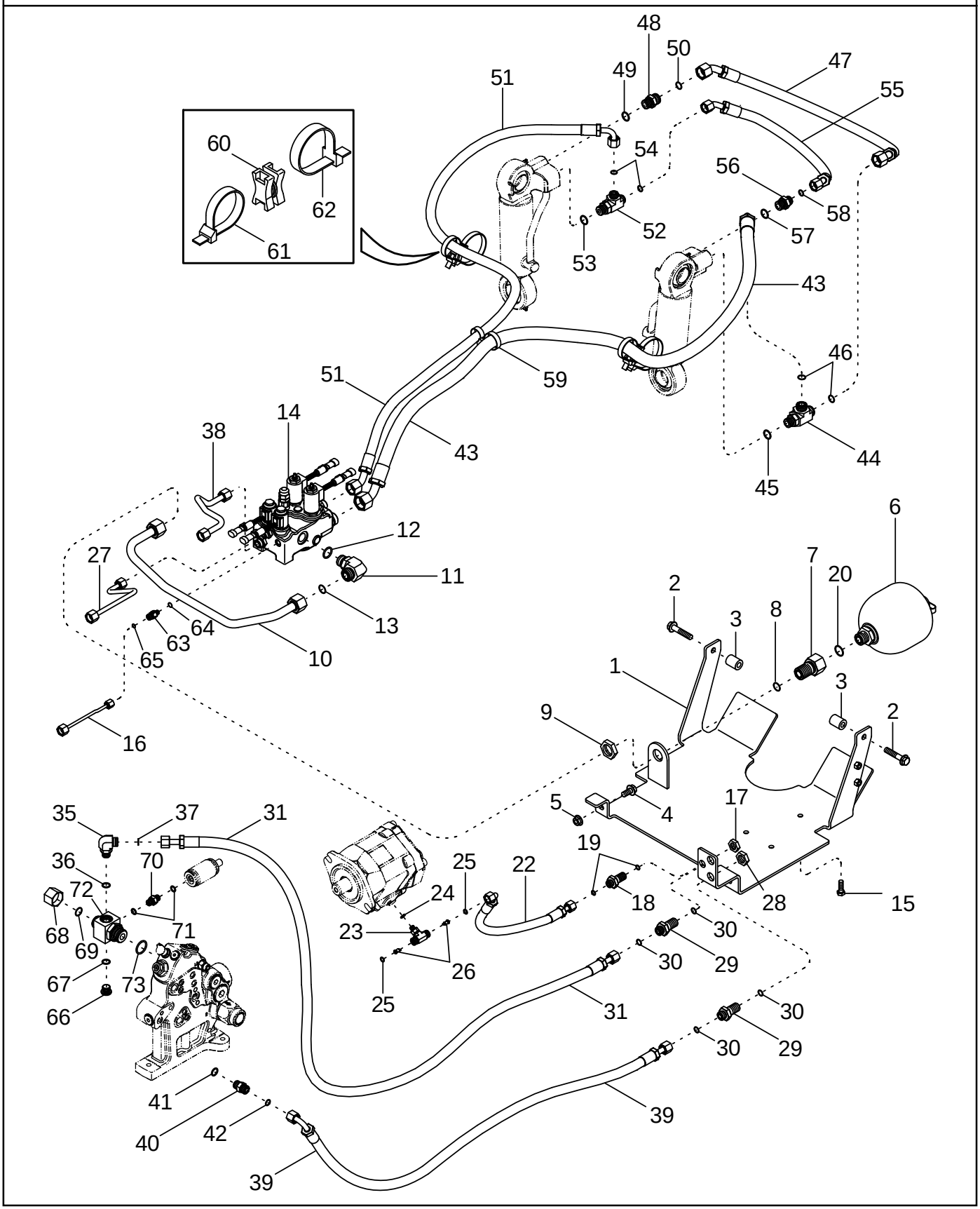

SISTEMA HIDRÁULICO - EJE SUSPENDIDO
SISTEMA HIDRÁULICO - EIXO SUSPENSO
HYDRAULISCH SYSTEEM - BEWEEGBAAR OPGEHANGEN AS
HYDRAULIKSYSTEM - OPHÆNGT AKSEL

R	N	P.N.	MOD	Q	Description Denominacion	Descrizione Denominação	Description Beschrijving	Bezeichnung Beskrivelse	L.C.
1		86983821		1	BRACKET PIEZA DE SOPORTE	STAFFA BRACADEIRA	PATTE FIXATION STEUNBEUGEL	HALTERUNG BESLAG	225S
2		844-12060		2	SCREW M12 x 60; 8.8 TORNILLO	VITE PARAFUSO	VIS SCHROEF	SCHRAUBE SKRUE	P136
3		444954A1		2	SPACER SEPARADOR	DISTANZIALE ESPACADOR	ENTRETOISE AFSTANDSRING	DISTANZSTÜCK AFSTANDSSTYKKE	075D
4		844-12025		2	SCREW M12 x 25; 8.8 TORNILLO	VITE PARAFUSO	VIS SCHROEF	SCHRAUBE SKRUE	7450
5		9804279		2	NUT M12 TUERCA	DADO PORCA	ECROU MOER	MUTTER MØTRIK	010D
6		452005A1		1	ACCUMULATOR ACUMULADOR	ACCUMULATORE ACUMULADOR	ACCUMULATEUR ACCUMULATOR	DRUCKBEHÄLTER AKKUMULATOR	037A
7		86983862		1	CONNECTION, 3 WAY Inc. 8 RACOR DE TRES BOCAS	RACCORDO A TRE VIE CONECTOR DE 3 VIAS	RACCORD A 3 VOIES 3-WEG VERBINDING	3-WEG-VERBINDUNG TRE-VEJS FORSKRUNIN	016R
8		238-6018		1	O-RING 3/4 ID x 1/16 JUNTA HERMETICA	ANELLO TOROIDALE ANEL O	JOINT TORIQUE O-RING	O-RING O-RING	7176
9		701-1249		1	NUT, LOCK 1-3/16 CONTRA TUERCA	CONTRODADO CONTRA PORCA	CONTRE-ECROU NUT, LOCK	KONTERMUTTER NUT, LOCK	P263
10		86983811		1	TUBE ASSY. TUBO (CONJUNTO)	TUBO, COMPLESSIVO TUBO CONJUNTO	TUYAUTERIE TUBE ASSY.	ROHRLEITUNG TUBE ASSY.	P465
11		700-307		1	ELBOW 1-3/16 fc sl x 27 Or, Inc. 12, 13 CODO	GOMITO JOELHO	COUDE ELLEBOOG	KNIESTÜCK VINKELROER	085G
12		637-64236		1	O-RING 23,6 ID x 2,9 JUNTA HERMETICA	ANELLO TOROIDALE ANEL O	JOINT TORIQUE O-RING	O-RING O-RING	7176
13		238-6018		1	O-RING 3/4 ID x 1/16 JUNTA HERMETICA	ANELLO TOROIDALE ANEL O	JOINT TORIQUE O-RING	O-RING O-RING	7176
14		452001A1	a	1	VALVE Suspended Axle Control VALVULA	VALVOLA VALVULA	SOUPAPE VALVE	VENTIL VALVE	9620
14	1	NS	b	1	NOT SERVICED VALVE, Suspended Axle Control NO SE REPARA	NON GESTITO NOT SERVICED	NON FOURNI NIET GESTOCKEERD	KEIN ERSATZTEIL NOT SERVICED	061N
15		514-742		3	BOLT M10 x 30; 10.9 TORNILLO	BULLONE PARAFUSO	BOULON BOUT	SCHAUBENBOLZEN SKRUE	140B
16		86990446		1	TUBE ASSY. Load Sense TUBO (CONJUNTO)	TUBO, COMPLESSIVO TUBO CONJUNTO	TUYAUTERIE TUBE ASSY.	ROHRLEITUNG TUBE ASSY.	P465
17		701-909		1	NUT M10 TUERCA	DADO PORCA	ECROU MOER	MUTTER MØTRIK	5780
18		701-120		1	CONNECTOR, HYD. 11/16 fc sl x bulk hd, Inc. 19 RACOR	RACCORDO IDRAULICO CONECTOR	RACCORD VERBINDING	STUTZEN FORSKRUNING	020R
19		238-6012		2	O-RING 3/8 ID x 1/16 JUNTA HERMETICA	ANELLO TOROIDALE ANEL O	JOINT TORIQUE O-RING	O-RING O-RING	7176

(1) See Figure 05-07
(a) BSN JAZ132797
(b) ASN JAZ132797

05-06		p2	11/04

HYDRAULIC SYSTEM - SUSPENDED AXLE
IMPIANTO IDRAULICO - ASSALE SOSPESO
CIRCUIT HYDRAULIQUE - ESSIEU SUSPENDU
HYDRAULIKANLAGE FÜR GEFEDERTE ACHSE

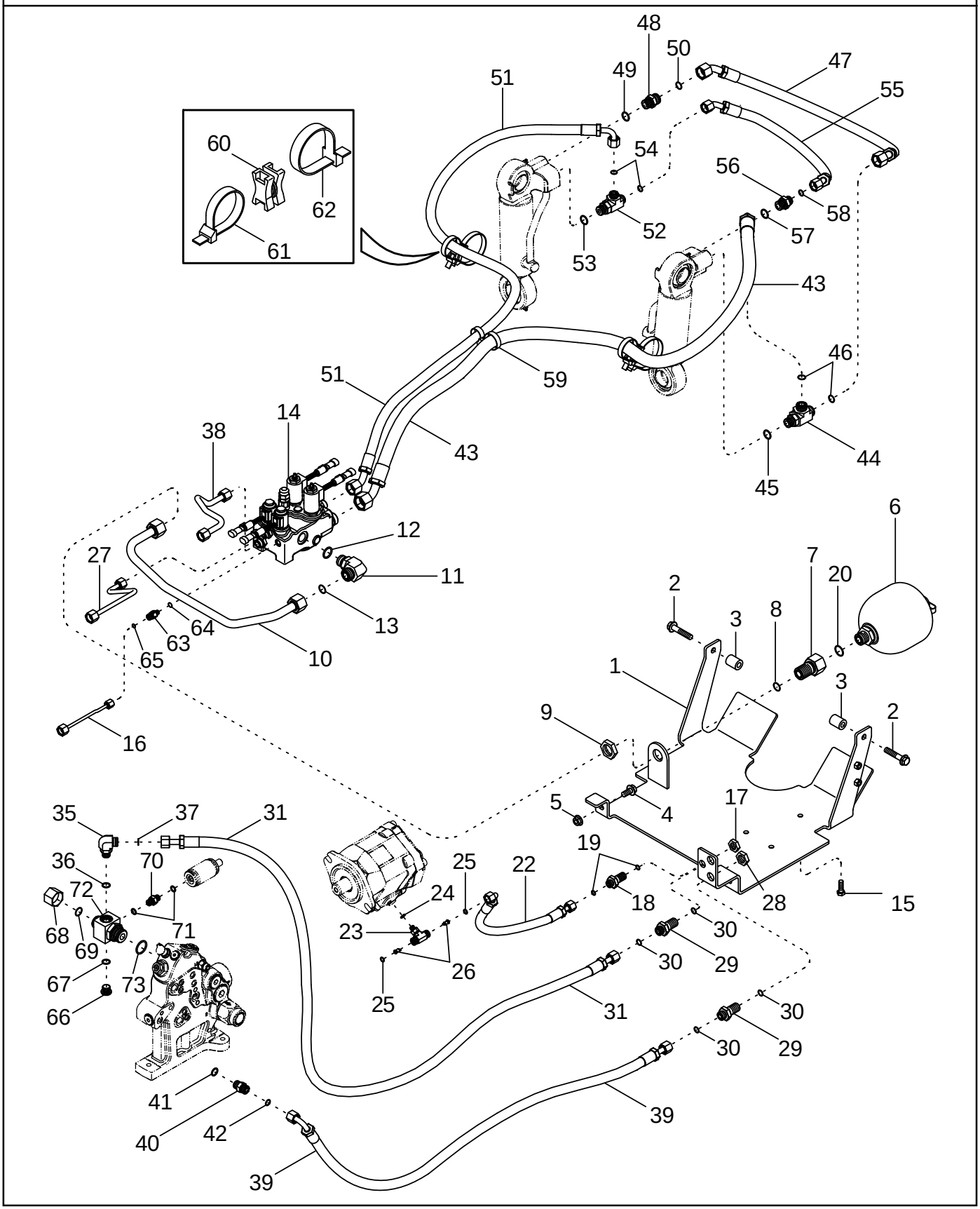

SISTEMA HIDRÁULICO - EJE SUSPENDIDO
SISTEMA HIDRÁULICO - EIXO SUSPENSO
HYDRAULISCH SYSTEEM - BEWEEGBAAR OPGEHANGEN AS
HYDRAULIKSYSTEM - OPHÆNGT AKSEL

R	N	P.N.	MOD	Q	Description Denominacion	Descrizione Denominação	Description Beschrijving	Bezeichnung Beskrivelse	L.C.
20		637-64236		1	O-RING 23,6 ID x 2,9 JUNTA HERMETICA	ANELLO TOROIDALE ANEL O	JOINT TORIQUE O-RING	O-RING O-RING	7176
22		86983810		1	HOSE MANGA	MANICOTTO FLESSIBILE TUBO FLEXIVEL	FLEXIBLE FLEXIBELE BUIS	SCHLAUCH SLANGE	030M
23		86994121		1	TEE Inc. 24 - 26 RACOR-T	PEZZO A T TE	TE TEE	T-STÜCK T-STYKKE	9020
24		637-63093		1	O-RING 9,3 ID x 2,2 JUNTA HERMETICA	ANELLO TOROIDALE ANEL O	JOINT TORIQUE O-RING	O-RING O-RING	7176
25		238-6012		2	O-RING 3/8 ID x 1/16 JUNTA HERMETICA	ANELLO TOROIDALE ANEL O	JOINT TORIQUE O-RING	O-RING O-RING	7176
26		133519C1		2	SCREEN PANTALLA PROTECTOR	SCHERMO ECRAN	ECRAN SCHERM	BILDSCHIRM SKAERM	047S
27		86990447		1	TUBE ASSY. Supply TUBO (CONJUNTO)	TUBO, COMPLESSIVO TUBO CONJUNTO	TUYAUTERIE TUBE ASSY.	ROHRLEITUNG TUBE ASSY.	P465
28		701-903		2	NUT TUERCA	DADO PORCA	ECROU MOER	MUTTER MØTRIK	5780
29		701-121		2	CONNECTOR, HYD. 13/16 fc sl x xblkhd, Inc. 30 RACOR	RACCORDO IDRAULICO CONECTOR	RACCORD VERBINDING	STUTZEN FORSKRUNING	020R
30		238-6014		2	O-RING 1/2 ID x 1/16 JUNTA HERMETICA	ANELLO TOROIDALE ANEL O	JOINT TORIQUE O-RING	O-RING O-RING	7176
31		87405555		1	TUBE ASSY. Supply TUBO (CONJUNTO)	TUBO, COMPLESSIVO TUBO CONJUNTO	TUYAUTERIE TUBE ASSY.	ROHRLEITUNG TUBE ASSY.	P465
35		700-305		1	ELBOW 13/16 fc sl x 18 Or, Inc. 36, 37 CODO	GOMITO JOELHO	COUDE ELLEBOOG	KNIESTÜCK VINKELRØR	2940
36		637-63153		1	O-RING 15,3 ID x 2,2 JUNTA HERMETICA	ANELLO TOROIDALE O-RING	JOINT THORIQUE O-RING	DICHTRING O-RING	055A
37		238-6014		1	O-RING 1/2 ID x 1/16 JUNTA HERMETICA	ANELLO TOROIDALE ANEL O	JOINT TORIQUE O-RING	O-RING O-RING	7176
38		86983812		1	TUBE ASSY. Return TUBO (CONJUNTO)	TUBO, COMPLESSIVO TUBO CONJUNTO	TUYAUTERIE TUBE ASSY.	ROHRLEITUNG TUBE ASSY.	P465
39		86983809		1	HOSE ASSY. Return MANGUERA (CONJUNTO	GRUPPO TUBO FLESS MANGUEIRA CONJUNTO	FLEXIBLE (ASSEMBLE) HOSE ASSY.	SCHLAUCH (KPLT.) HOSE ASSY.	P457
40		201-102		1	ADAPTER 13/16 fc sl x 3/4 Or, Inc. 41, 42 ADAPTOR	ADATTATORE ADAPTADOR	ADAPTEUR VERLOOPSTUK	ADAPTER ADAPTER	0031
41		237-6008		1	O-RING 41/64 ID x 3/32 JUNTA HERMETICA	ANELLO TOROIDALE O-RING	JOINT THORIQUE O-RING	DICHTRING O-RING	055A
42		238-6014		1	O-RING 1/2 ID x 1/16 JUNTA HERMETICA	ANELLO TOROIDALE ANEL O	JOINT TORIQUE O-RING	O-RING O-RING	7176
43		86990961		1	HOSE MANGA	MANICOTTO FLESSIBILE TUBO FLEXIVEL	FLEXIBLE FLEXIBELE BUIS	SCHLAUCH SLANGE	030M
44		700-420		1	TEE 1 fc sl x 22 Or, Inc. 45, 46 RACOR-T	PEZZO A T TE	TE TEE	T-STÜCK T-STYKKE	9020
45		637-63193		1	O-RING 19,3 ID x 2,2 JUNTA HERMETICA	ANELLO TOROIDALE ANEL O	JOINT TORIQUE O-RING	O-RING O-RING	7176

HYDRAULIC SYSTEM - SUSPENDED AXLE
IMPIANTO IDRAULICO - ASSALE SOSPESO
CIRCUIT HYDRAULIQUE - ESSIEU SUSPENDU
HYDRAULIKANLAGE FÜR GEFEDERTE ACHSE

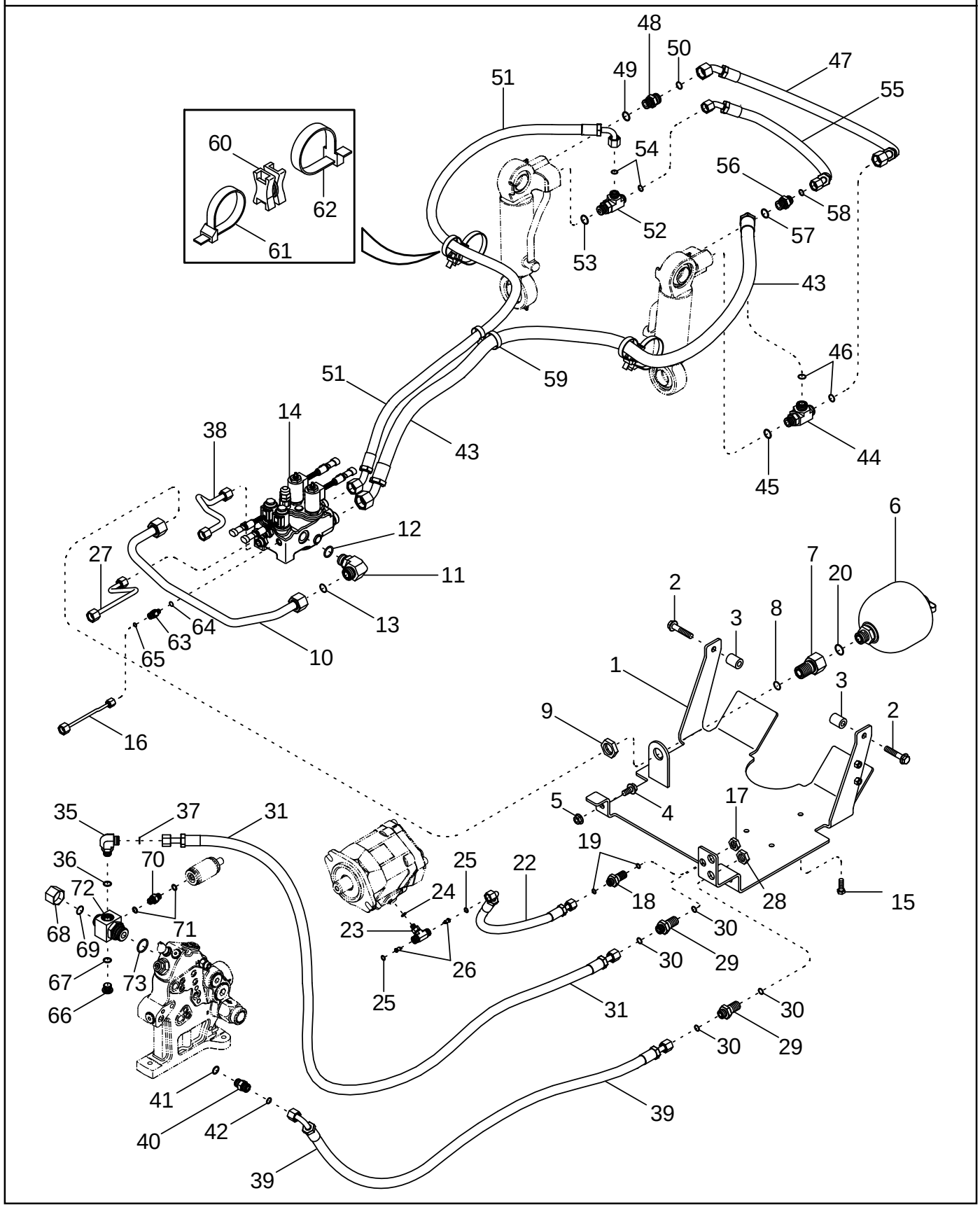

SISTEMA HIDRÁULICO - EJE SUSPENDIDO
SISTEMA HIDRÁULICO - EIXO SUSPENSO
HYDRAULISCH SYSTEEM - BEWEEGBAAR OPGEHANGEN AS
HYDRAULIKSYSTEM - OPHÆNGT AKSEL

R	N	P.N.	MOD	Q	Description Denominacion	Descrizione Denominação	Description Beschrijving	Bezeichnung Beskrivelse	L.C.
46		238-6016		2	O-RING 5/8 ID x 1/16 JUNTA HERMETICA	ANELLO TOROIDALE ANEL O	JOINT TORIQUE O-RING	O-RING O-RING	7176
47		86990963		1	HOSE, FLEXIBLE MANGA FLEXIBLE	TUBO FLESSIBILE TUBO FLEXIVEL	TUYAU FLEXIBLE FLEXIBELE SLANG	SCHLAUCH, FLEXIBEL FLEKSIBEL SLANGE	192T
48		700-103		1	CONNECTOR, HYD. 1 fc sl x 22 Or, Inc. 49, 50 RACOR	RACCORDO IDRAULICO CONECTOR	RACCORD VERBINDING	STUTZEN FORSKRUNING	020R
49		637-63193		1	O-RING 19,3 ID x 2,2 JUNTA HERMETICA	ANELLO TOROIDALE ANEL O	JOINT TORIQUE O-RING	O-RING O-RING	7176
50		238-6016		1	O-RING 5/8 ID x 1/16 JUNTA HERMETICA	ANELLO TOROIDALE ANEL O	JOINT TORIQUE O-RING	O-RING O-RING	7176
51		86990962		1	HOSE MANGA	MANICOTTO FLESSIBILE TUBO FLEXIVEL	FLEXIBLE FLEXIBELE BUIS	SCHLAUCH SLANGE	030M
52		700-445		1	TEE 13/16 fc sl x 22 Or, Inc. 53, 54 RACOR-T	PEZZO A T TE	TE TEE	T-STÜCK T-STYKKE	9020
53		637-63193		1	O-RING 19,3 ID x 2,2 JUNTA HERMETICA	ANELLO TOROIDALE ANEL O	JOINT TORIQUE O-RING	O-RING O-RING	7176
54		238-6014		2	O-RING 1/2 ID x 1/16 JUNTA HERMETICA	ANELLO TOROIDALE ANEL O	JOINT TORIQUE O-RING	O-RING O-RING	7176
55		86990964		1	HOSE MANGA	MANICOTTO FLESSIBILE TUBO FLEXIVEL	FLEXIBLE FLEXIBELE BUIS	SCHLAUCH SLANGE	030M
56		700-162		1	CONNECTOR, HYD. 13/16 fc sl x 22 Or, Inc. 57, 58 RACOR	RACCORDO IDRAULICO CONECTOR	RACCORD VERBINDING	STUTZEN FORSKRUNING	020R
57		637-63193		1	O-RING 19,3 ID x 2,2 JUNTA HERMETICA	ANELLO TOROIDALE ANEL O	JOINT TORIQUE O-RING	O-RING O-RING	7176
58		238-6014		1	O-RING 1/2 ID x 1/16 JUNTA HERMETICA	ANELLO TOROIDALE ANEL O	JOINT TORIQUE O-RING	O-RING O-RING	7176
59		86991000		1	CLAMP BORNE	MORSETTO BORNE	BRIDE KLEM	KLEMME SPÆNDEBÅND	120M
60		86991001		2	SPACER SEPARADOR	DISTANZIALE ESPACADOR	ENTRETOISE AFSTANDSRING	DISTANZSTÜCK AFSTANDSSTYKKE	075D
61		86991009		2	STRAP, CABLE CIERRA CABLES	CINGHIA, CABLAGGIO APRIETACABLES	SERRE-CABLE STRAP, CABLE	KABELBINDER SELEKABEL	P716
62		86991007		2	STRAP, CABLE CIERRA CABLES	CINGHIA, CABLAGGIO APRIETACABLES	SERRE-CABLE STRAP, CABLE	KABELBINDER SELEKABEL	P716
63		86984110		1	VALVE Check, Inc. 64, 65 VALVULA	VALVOLA VALVULA	SOUPAPE VALVE	VENTIL VALVE	9620
64		637-63153		1	O-RING 15,3 ID x 2,2 JUNTA HERMETICA	ANELLO TOROIDALE O-RING	JOINT THORIQUE O-RING	DICHTRING O-RING	055A
65		238-6011		1	O-RING 5/16 ID x 1/16 JUNTA HERMETICA	ANELLO TOROIDALE ANEL O	JOINT TORIQUE O-RING	O-RING O-RING	7176
66		221578A1		1	PLUG Inc. 67 TAPÓN	TAPPO BUJÃO	BOUCHON PLUG	STOPFEN PROP	050T
67		637-63153		1	O-RING 15,3 ID x 2,2 JUNTA HERMETICA	ANELLO TOROIDALE O-RING	JOINT THORIQUE O-RING	DICHTRING O-RING	055A
68		701-907		1	PLUG 1-3/16, Inc. 69 TAPÓN	TAPPO BUJAO	BOUCHON PLUG	STOPFEN PROP	6400

HYDRAULIC SYSTEM - SUSPENDED AXLE
IMPIANTO IDRAULICO - ASSALE SOSPESO
CIRCUIT HYDRAULIQUE - ESSIEU SUSPENDU
HYDRAULIKANLAGE FÜR GEFEDERTE ACHSE

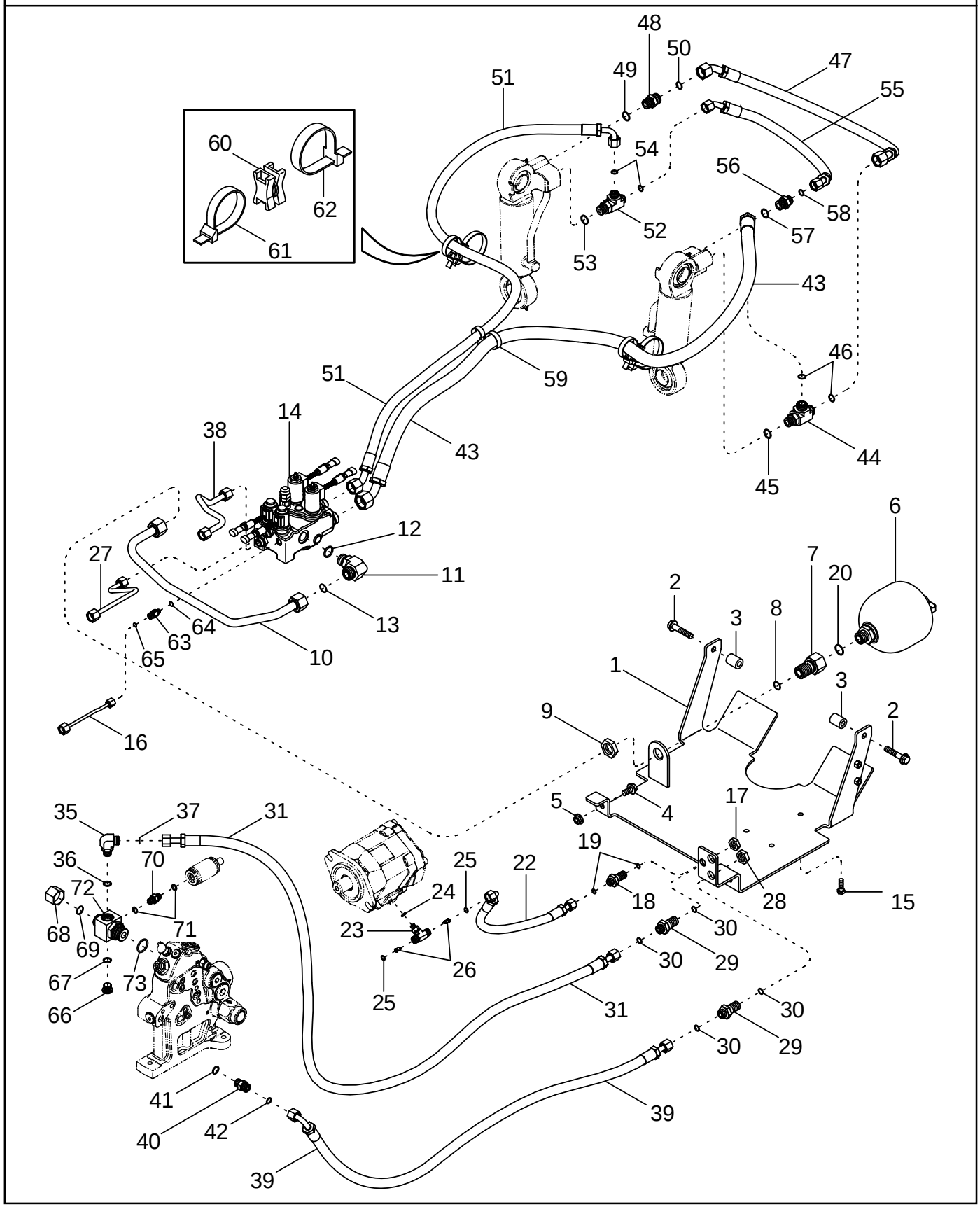

SISTEMA HIDRÁULICO - EJE SUSPENDIDO
SISTEMA HIDRÁULICO - EIXO SUSPENSO
HYDRAULISCH SYSTEEM - BEWEEGBAAR OPGEHANGEN AS
HYDRAULIKSYSTEM - OPHÆNGT AKSEL

R	N	P.N.	MOD	Q	Description Denominacion	Descrizione Denominação	Description Beschrijving	Bezeichnung Beskrivelse	L.C.
69		238-6018		1	O-RING 3/4 ID x 1/16 JUNTA HERMETICA	ANELLO TOROIDALE ANEL O	JOINT TORIQUE O-RING	O-RING O-RING	7176
70		87403003		1	CONNECTOR, HYD. Inc. 7' RACOR	RACCORDO IDRAULICO CONECTOR	RACCORD VERBINDING	STUTZEN FORSKRUNING	020R
71		637-63113		2	O-RING 11,3 ID x 2,2 JUNTA HERMETICA	ANELLO TOROIDALE O-RING	JOINT THORIQUE O-RING	DICHTRING O-RING	055A
72		87402551		1	TEE Inc. 73 RACOR-T	PEZZO A T TE	TE TEE	T-STÜCK T-STYKKE	9020
73		637-64296		1	O-RING 29,6 ID x 2,9 JUNTA HERMETICA	ANELLO TOROIDALE ANEL O	JOINT TORIQUE O-RING	O-RING O-RING	7176

VALVE ASSY - SUSPENDED MFD AXLE
GRUPPO VALVOLA - ASSALE MFD SOSPESO
DISTRIBUTEUR - ESSIEU DE PONT AVANT MOTEUR À SUSPENSION
VENTILEINHEIT - ALLRADANTRIEB-PENDELACHSE

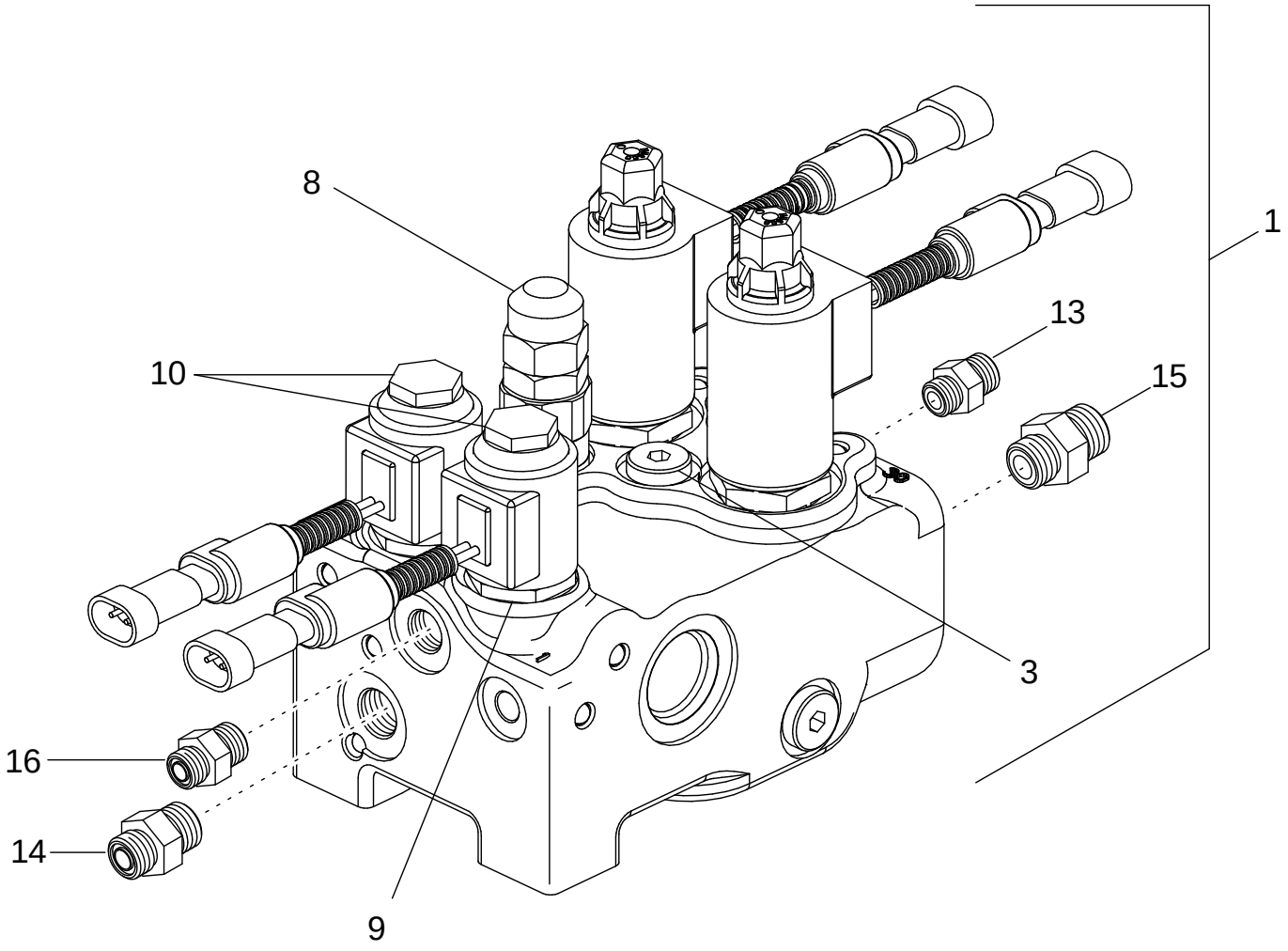

CONJUNTO DE LA VALVULA - EJE SUSPENDIDO DE LA TDM
CONJUNTO DA VÁLVULA - EIXO DA TMD SUSPENSO
KLEP ASSEMBLAGE- OPGEHANGEN MFD-AS
VENTILSAMLING - AFFJEDRET MFT-AKSEL

R	N	P.N.	MOD	Q	Description Denominacion	Descrizione Denominação	Description Beschrijving	Bezeichnung Beskrivelse	L.C.
1		452001A1	a	1	VALVE Suspended Axle Control, Inc. 2 - 16				
						VALVOLA	SOUPAPE	VENTIL	9620
					VALVULA	VALVULA	VALVE	VALVE	
1		NS	b	1	NOT SERVICED VALVE, Suspended Axle Control, Inc. 2 - 16				
						NON GESTITO	NON FOURNI	KEIN ERSATZTEIL	061N
					NO SE REPARA	NOT SERVICED	NIET GESTOCKEERD	NOT SERVICED	
2		NS	a	1	NOT SERVICED VALVE	NON GESTITO	NON FOURNI	KEIN ERSATZTEIL	061N
					NO SE REPARA	NOT SERVICED	NIET GESTOCKEERD	NOT SERVICED	
2		87439776	b	1	VALVE Without Fittings, Inc. 3 - 12				
						VALVOLA	SOUPAPE	VENTIL	9620
					VALVULA	VALVULA	VALVE	VALVE	
3		47126454		1	SCREW, ADJUSTMENT	VITE DI REGOLAZIONE	VIS DE REGLAGE	EINSTELLSCHRAUBE	051V
					TORNILLO DE REGLAGE	PARAFUSO DE AJUSTE	AFSTELSCHROEF	JUSTERINGSSKRUE	
4		87437896		1	KIT, SERVICE Inc. 5, 6	KIT ASSISTENZIALE	KIT ASSISTANCE	WARTUNGSSATZ	021K
					KIT, SERVICE	KIT, SERVICE	KIT, SERVICE	SERVICE SAET	
5		87437191		1	VALVE Poppet	VALVOLA	SOUPAPE	VENTIL	9620
					VALVULA	VALVULA	VALVE	VALVE	
6		87437192		1	PISTON	STANTUFFO	PISTON	KOLBEN	235S
					EMBOLO	PISTAO	ZUIGER	STEMPEL	
7		47126452		1	PLUG	TAPPO	BOUCHON	STOPFEN	050T
					TAPÓN	BUJÃO	PLUG	PROP	
8		47126451		1	VALVE, PRESSURE RELIEF Relief				
						VALVOLA, DI SICUREZZA	SOUPAPE, DÉCHARGE	ÜBERDRUCKVENTIL	007V
					VÁLVULA, DESCARGA	VÁLVULA, DESCARGA	OVERDRUKVENTIEL	SIKKERHEDSVENTIL	
9		82025708		2	BODY Solenoid	CORPO	CORPS	KÖRPER	300C
					CUERPO	CORPO	LICHAAM	HUS	
10		82025709		2	WINDING, ELECTRICAL Coil				
						AVVOLGIMENTO ELETTR	ENROULEMENT ELECTR	ELEKTROWICKLUNG	110A
					BOBINADO	BOBINADO	WIKKELING	VINDING, ELEKTRISK	
11		87435072		1	VALVE	VALVOLA	SOUPAPE	VENTIL	9620
					VALVULA	VALVULA	VALVE	VALVE	
12		47126449		1	VALVE, CHECK	VALVOLA, DI RITEGNO	CLAPET ANTI-RETOUR	RÜCKSCHLAGVENTIL	P394
					VALVULA DE CIERRE	VALVULA CHECAGEM	INZETSTUK	KONTRAVENTIL	
13		47125482		1	CONNECTOR, HYD. M27 x 1 in				
						RACCORDO IDRAULICO	RACCORD	STUTZEN	020R
					RACOR	CONECTOR	VERBINDING	FORSKRUNING	
14		82019684		1	CONNECTOR, HYD. M16 x 13/16 in				
						RACCORDO IDRAULICO	RACCORD	STUTZEN	020R
					RACOR	CONECTOR	VERBINDING	FORSKRUNING	
15		82019639		1	CONNECTOR, HYD. M27 x 1-3/16 in				
						RACCORDO IDRAULICO	RACCORD	STUTZEN	020R
					RACOR	CONECTOR	VERBINDING	FORSKRUNING	
16		82019693		1	CONNECTOR, HYD. M14 x 11/16 in				
						RACCORDO IDRAULICO	RACCORD	STUTZEN	020R
					RACOR	CONECTOR	VERBINDING	FORSKRUNING	

(a) BSN JAZ132797
(b) ASN JAZ132797

05-08		p1	11/04

FRONT AXLE - MOUNTING, MFD
ASSALE ANTERIORE - SUPPORTO, MFD
MONTAGE DE L'ESSIEU AVANT, PONT AVANT
VORDERACHSBEFESTIGUNG FÜR ALLRADANTRIEB

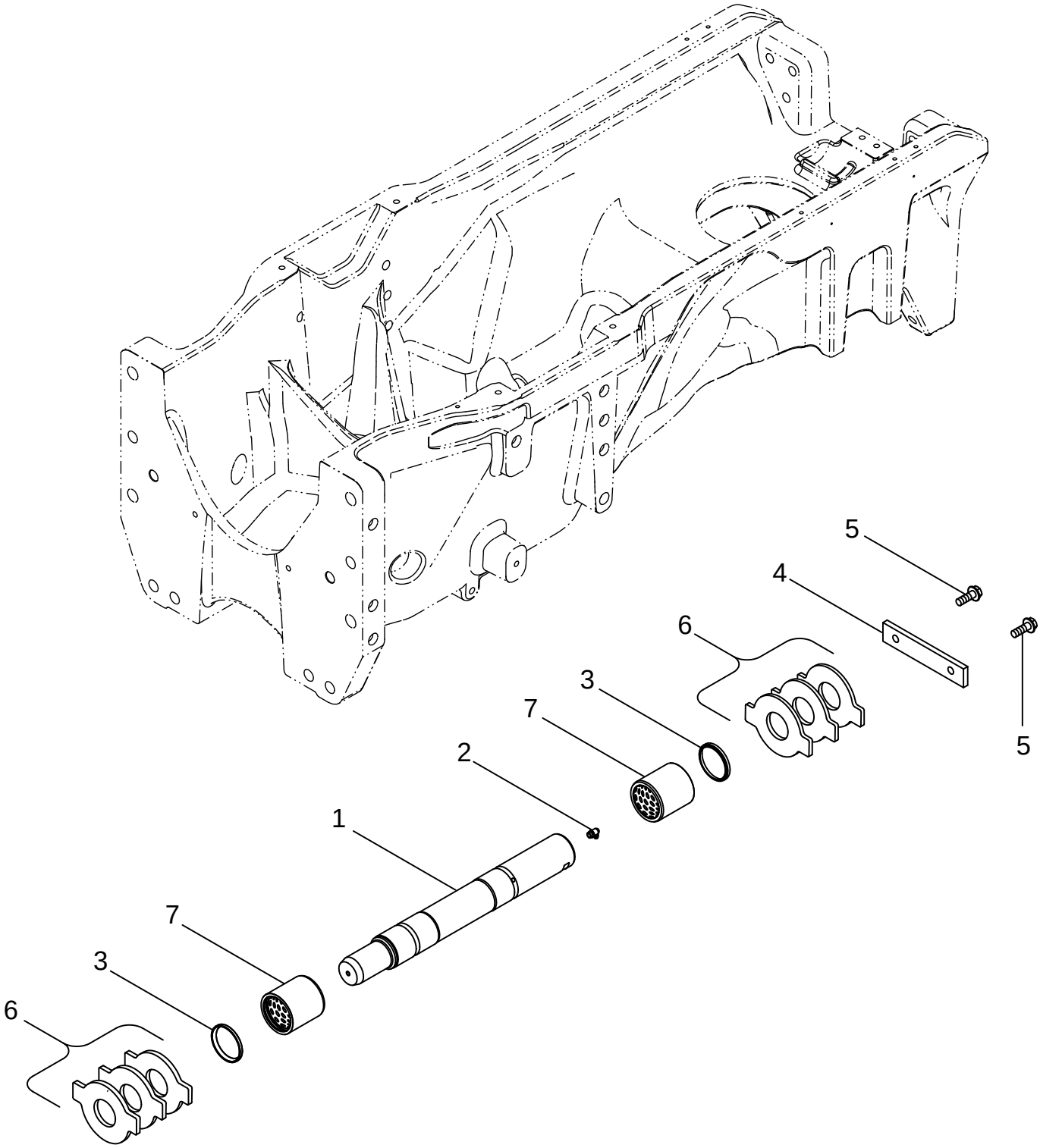

EJE DELANTERO - MONTAJE, TDM
SUPORTE DO EIXO DIANTEIRO - TMD
VOORAS - MONTAGE, MFD
FORAKSEL - OPHÆNG, MFD

R	N	P.N.	MOD	Q	Description Denominacion	Descrizione Denominação	Description Beschrijving	Bezeichnung Beskrivelse	L.C.
1		87400196		1	PIN ASSY. Inc. 2 PASADOR (CONJUNTO)	GRUPPO SPINA PINO CONJUNTO	CHEVILLE (ASSEMBLEE) PIN ASSY.	STIFT (KPLT.) PIN ASSY.	P524
2		219-92		2	FITTING Grease, 90, 1/8 NPT CONEXION	RACCORDO CONEXAO	RACCORD FITTING	ANSCHLUSSSTÜCK FITTING	3300
3		87400202		2	SEAL ANILLO DE CIERRE	ANELLO DI TENUTA ANEL DE VEDACAO	JOINT DICHTINGSRING	DICHTUNG PAKNINGSRING	132A
4		226686A3		1	PLATE PLACA	PIASTRA CHAPA	PLAQUE PLAAT	PLATTE PLADE	105P
5		844-12035		2	SCREW M12 x 35; 8.8 TORNILLO	VITE PARAFUSO	VIS SCHROEF	SCHRAUBE SKRUE	7450
6		87403514		AR	WASHER, THRUST 6.25 / 8.25 mm ARANDELA DE TOPE	RONDELLA, DI SPINTA ANILHA DE ENCOSTO	RONDELLE DE BUTÉE SLUITRING DRUKPLAAT	DRUCKSCHEIBE TRYKSKIVE	023R
6		87400218		AR	WASHER, THRUST 7.0 / 9.0 mm ARANDELA DE TOPE	RONDELLA, DI SPINTA ANILHA DE ENCOSTO	RONDELLE DE BUTÉE SLUITRING DRUKPLAAT	DRUCKSCHEIBE TRYKSKIVE	023R
6		87400219		AR	WASHER, THRUST 7.5 / 9.5 mm ARANDELA DE TOPE	RONDELLA, DI SPINTA ANILHA DE ENCOSTO	RONDELLE DE BUTÉE SLUITRING DRUKPLAAT	DRUCKSCHEIBE TRYKSKIVE	023R
6		87400220		AR	WASHER, THRUST 8.0 / 10.0 mm ARANDELA DE TOPE	RONDELLA, DI SPINTA ANILHA DE ENCOSTO	RONDELLE DE BUTÉE SLUITRING DRUKPLAAT	DRUCKSCHEIBE TRYKSKIVE	023R
7		86993401		2	BUSHING CASQUILLO	BOCCOLA CASQUILHO	BAGUE LAGERBUS	BUECHSE BOESNING	095B

05-09		p1	11/04

FRONT AXLE - SUSPENSION, SUSPENDED MFD
ASSALE ANTERIORE - SOSPENSIONE, MFD SOSPESO
SUSPENSION DE L'ESSIEU AVANT, PONT AVANT SUSPENDU
VORDERACHSFEDERUNG - GEFEDERTER ALLRADANTRIEB

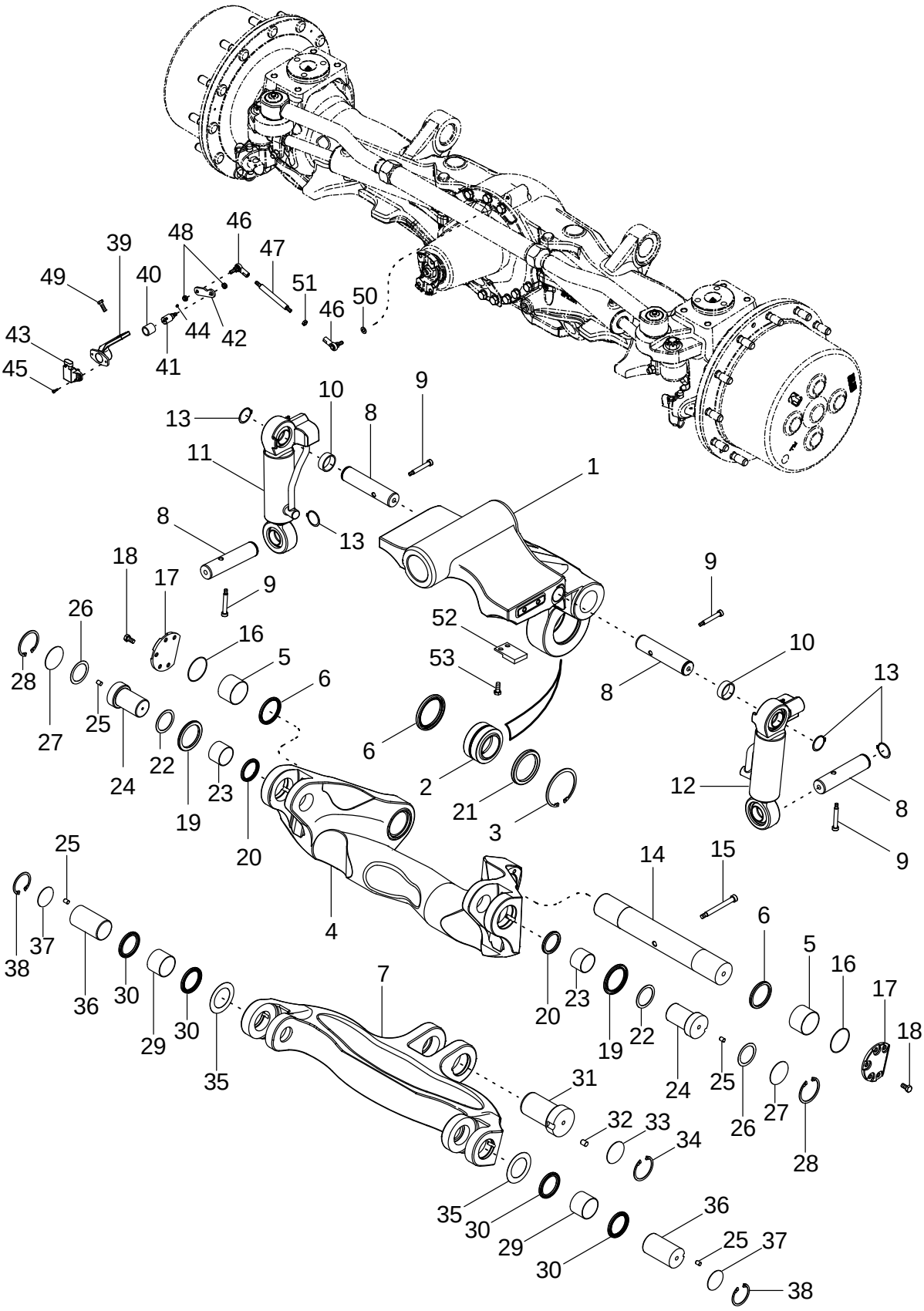

EJE DELANTERO - SUSPENSIÓN, EJE SUSPENDIDO DE LA TDM
SUSPENSÃO DO EIXO DIANTEIRO - TMD SUSPENSA
VOORAS - OPHANGING, BEWEEGBAAR OPGEHANGEN MFD
FORAKSEL - OPHÆNG, OPHÆNGT MFD

R	N	P.N.	MOD	Q	Description Denominacion	Descrizione Denominação	Description Beschrijving	Bezeichnung Beskrivelse	L.C.
1		87406430		1	CRADLE SOPORTE	CULLA EMPACOTAR	BERCEAU SLEDE	WIEGE RAMME	333C
2		87406434		1	BEARING, BALL RODAMIENTO DE BOLAS	CUSCINETTO A SFERA ROLAMENTO	ROULEMENT A BILLES LAGER, KOGEL	KUGELLAGER KUGLELEJE	343C
3		87406477		1	RING, SNAP ANILLO DE RESORTE	ANELLO ELASTICO ANEL	ANNEAU D'ARRÊT RING, SNAP	SICHERUNGSRING LÅSERING	054A
4		87406432		1	ARM Upper Swing BRAZO	BRACCIO BRAÇO	BRAS ARM	AUSLEGER ARM	130B
5		87406435		2	BUSHING CASQUILLO	BOCCOLA CASQUILHO	BAGUE LAGERBUS	BUECHSE BOESNING	095B
6		87406443		2	SEAL ANILLO DE CIERRE	ANELLO DI TENUTA ANEL DE VEDACAO	JOINT DICHTINGSRING	DICHTUNG PAKNINGSRING	132A
7		87406431		1	ARM Lower Swing BRAZO	BRACCIO BRAÇO	BRAS ARM	AUSLEGER ARM	130B
8		87406468		4	PIN PERNO	PERNO PERNO	AXE PEN	BOLZEN STIFT	080P
9		87406494		4	BOLT TORNILLO	BULLONE PARAFUSO	BOULON BOUT	SCHAUBENBOLZEN SKRUE	140B
10		87406485		2	SPACER SEPARADOR	DISTANZIALE ESPACADOR	ENTRETOISE AFSTANDSRING	DISTANZSTÜCK AFSTANDSSTYKKE	075D
11		87406483		1	CYLINDER Left Hand CILINDRO	CILINDRO CILINDRO	VERIN CYLINDER	ZYLINDER CYLINDER	164C
12		87406484		1	CYLINDER Right Hand CILINDRO	CILINDRO CILINDRO	VERIN CYLINDER	ZYLINDER CYLINDER	164C
13		87406497		4	RING, SNAP ANILLO DE RESORTE	ANELLO ELASTICO ANEL	ANNEAU D'ARRÊT RING, SNAP	SICHERUNGSRING LÅSERING	054A
14		87406467		1	PIN PERNO	PERNO PERNO	AXE PEN	BOLZEN STIFT	080P
15		87406493		1	SCREW TORNILLO	VITE PARAFUSO	VIS SCHROEF	SCHRAUBE SKRUE	040V
16		87406502		2	O-RING JUNTA HERMETICA	ANELLO TOROIDALE O-RING	JOINT THORIQUE O-RING	DICHTRING O-RING	055A
17		87406476		2	PLATE PLACA	PIASTRA CHAPA	PLAQUE PLAAT	PLATTE PLADE	105P
18		87406496		10	BOLT TORNILLO	BULLONE PARAFUSO	BOULON BOUT	SCHAUBENBOLZEN SKRUE	140B
19		87406441		2	SEAL ANILLO DE CIERRE	ANELLO DI TENUTA ANEL DE VEDACAO	JOINT DICHTINGSRING	DICHTUNG PAKNINGSRING	132A
20		87406440		2	SEAL ANILLO DE CIERRE	ANELLO DI TENUTA ANEL DE VEDACAO	JOINT DICHTINGSRING	DICHTUNG PAKNINGSRING	132A
21		87406445		1	SEAL ANILLO DE CIERRE	ANELLO DI TENUTA ANEL DE VEDACAO	JOINT DICHTINGSRING	DICHTUNG PAKNINGSRING	132A
22		87406447		2	WASHER, THRUST ARANDELA DE TOPE	RONDELLA, DI SPINTA ANILHA DE ENCOSTO	RONDELLE DE BUTÉE SLUITRING DRUKPLAAT	DRUCKSCHEIBE TRYKSKIVE	023R
23		87406436		2	BUSHING CASQUILLO	BOCCOLA CASQUILHO	BAGUE LAGERBUS	BUECHSE BOESNING	095B
24		87406452		2	PIN PERNO	PERNO PERNO	AXE PEN	BOLZEN STIFT	080P

FRONT AXLE - SUSPENSION, SUSPENDED MFD
ASSALE ANTERIORE - SOSPENSIONE, MFD SOSPESO
SUSPENSION DE L'ESSIEU AVANT, PONT AVANT SUSPENDU
VORDERACHSFEDERUNG - GEFEDERTER ALLRADANTRIEB

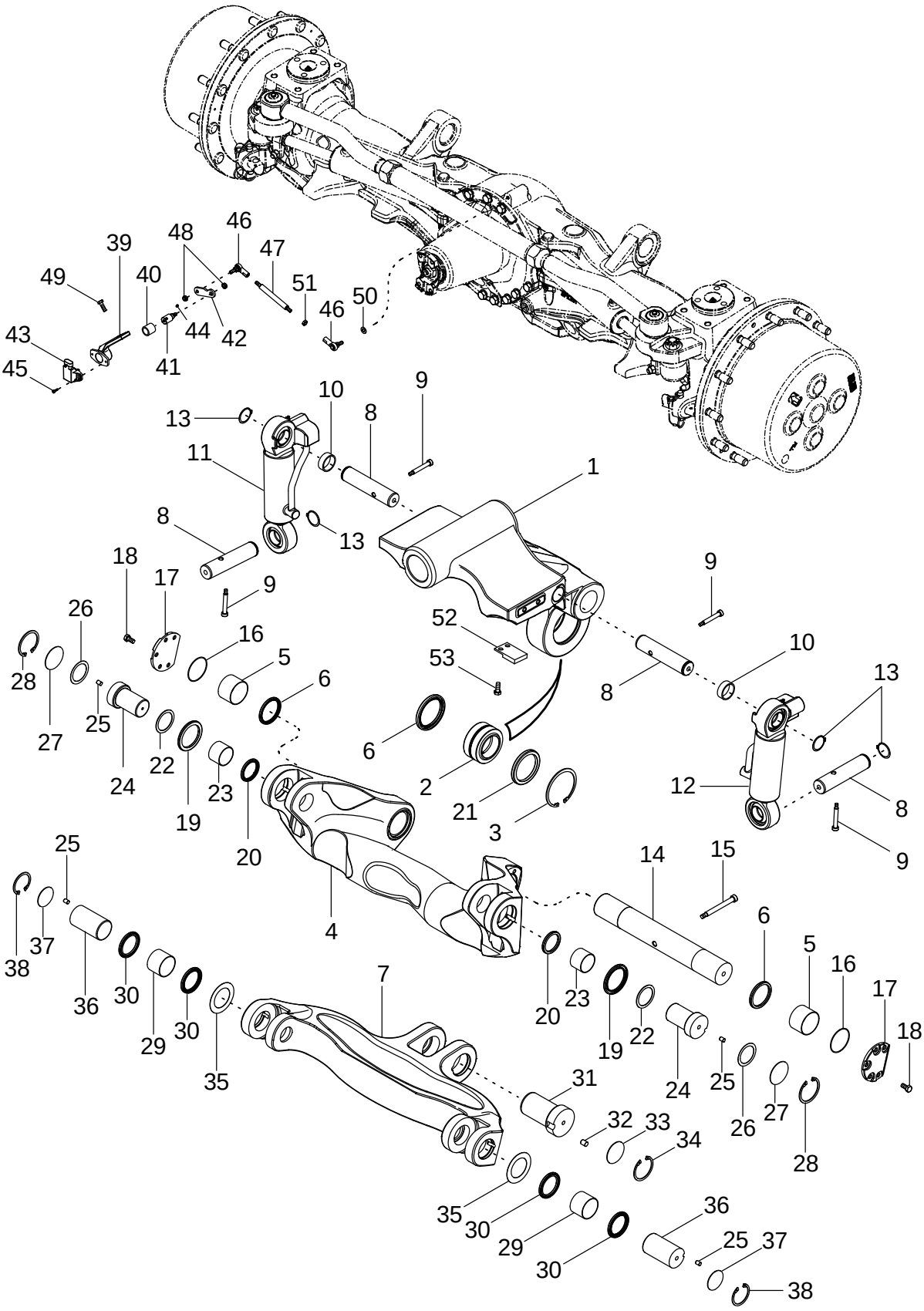

EJE DELANTERO - SUSPENSIÓN, EJE SUSPENDIDO DE LA TDM
SUSPENSÃO DO EIXO DIANTEIRO - TMD SUSPENSA
VOORAS - OPHANGING, BEWEEGBAAR OPGEHANGEN MFD
FORAKSEL - OPHÆNG, OPHÆNGT MFD

R	N	P.N.	MOD	Q	Description Denominacion	Descrizione Denominação	Description Beschrijving	Bezeichnung Beskrivelse	L.C.
25		87406455		4	PIN PERNO	PERNO PERNO	AXE PEN	BOLZEN STIFT	080P
26		87406450		1	WASHER, THRUST ARANDELA DE TOPE	RONDELLA, DI SPINTA ANILHA DE ENCOSTO	RONDELLE DE BUTÉE SLUITRING DRUKPLAAT	DRUCKSCHEIBE TRYKSKIVE	023R
27		87406449		2	WASHER, THRUST ARANDELA DE TOPE	RONDELLA, DI SPINTA ANILHA DE ENCOSTO	RONDELLE DE BUTÉE SLUITRING DRUKPLAAT	DRUCKSCHEIBE TRYKSKIVE	023R
28		87406474		2	RING, SNAP ANILLO DE RESORTE	ANELLO ELASTICO ANEL	ANNEAU D'ARRÊT RING, SNAP	SICHERUNGSRING LÅSERING	054A
29		87406437		2	BUSHING CASQUILLO	BOCCOLA CASQUILHO	BAGUE LAGERBUS	BUECHSE BOESNING	095B
30		87406439		4	SEAL ANILLO DE CIERRE	ANELLO DI TENUTA ANEL DE VEDACAO	JOINT DICHTINGSRING	DICHTUNG PAKNINGSRING	132A
31		87406453		1	PIN PERNO	PERNO PERNO	AXE PEN	BOLZEN STIFT	080P
32		87406454		1	PIN PERNO	PERNO PERNO	AXE PEN	BOLZEN STIFT	080P
33		87406446		1	WASHER, THRUST ARANDELA DE TOPE	RONDELLA, DI SPINTA ANILHA DE ENCOSTO	RONDELLE DE BUTÉE SLUITRING DRUKPLAAT	DRUCKSCHEIBE TRYKSKIVE	023R
34		87406469		1	RING, SNAP ANILLO DE RESORTE	ANELLO ELASTICO ANEL	ANNEAU D'ARRÊT RING, SNAP	SICHERUNGSRING LÅSERING	054A
35		87406486		1	SPACER SEPARADOR	DISTANZIALE ESPACADOR	ENTRETOISE AFSTANDSRING	DISTANZSTÜCK AFSTANDSSTYKKE	075D
36		87406451		2	PIN PERNO	PERNO PERNO	AXE PEN	BOLZEN STIFT	080P
37		87406448		2	WASHER, THRUST ARANDELA DE TOPE	RONDELLA, DI SPINTA ANILHA DE ENCOSTO	RONDELLE DE BUTÉE SLUITRING DRUKPLAAT	DRUCKSCHEIBE TRYKSKIVE	023R
38		87406473		2	RING, SNAP ANILLO DE RESORTE	ANELLO ELASTICO ANEL	ANNEAU D'ARRÊT RING, SNAP	SICHERUNGSRING LÅSERING	054A
39		87406472		1	BRACKET PIEZA DE SOPORTE	STAFFA BRACADEIRA	PATTE FIXATION STEUNBEUGEL	HALTERUNG BESLAG	225S
40		87406438		1	BUSHING CASQUILLO	BOCCOLA CASQUILHO	BAGUE LAGERBUS	BUECHSE BOESNING	095B
41		87406487		1	SENSOR SENSOR	SENSORE SENSOR	CAPTEUR SENSOR	SENSOR FØLER	608S
42		87406470		1	LINK, CONNECTING ESLABÓN DE CONEXIÓN	MAGLIA GIUNZIONE LIGADOR	MAILLON DE RACCORD KETTINGSCHAKEL	VERBINDUNGSGLIED KÆDSAMLELED	540M
43		87406433		1	SENSOR SENSOR	SENSORE SENSOR	CAPTEUR SENSOR	SENSOR FØLER	608S
44		87406492		1	SET SCREW TORNILLO DE AJUSTE	VITE DI FERMO TORNILLO DE AJUSTE	VIS DE RÉGLAGE KRACHTBRON	STELLSCHRAUBE PINOLSKRUE	P327
45		87406498		2	SCREW TORNILLO	VITE PARAFUSO	VIS SCHROEF	SCHRAUBE SKRUE	040V
46		87406490		2	BALL JOINT JUNTA DE ROTULA	GIUNTO SFERICO JUNTA ESFÉRICA	ROTULE KOGELGEWRICHT	KUGELGELENK KUGLELED	070G
47		87406488		1	SHAFT EJE	ALBERO VEIO	ARBRE AS	WELLE AKSEL	016A
48		87406499		2	NUT TUERCA	DADO PORCA	ECROU MOER	MUTTER MØTRIK	010D

FRONT AXLE - SUSPENSION, SUSPENDED MFD
ASSALE ANTERIORE - SOSPENSIONE, MFD SOSPESO
SUSPENSION DE L'ESSIEU AVANT, PONT AVANT SUSPENDU
VORDERACHSFEDERUNG - GEFEDERTER ALLRADANTRIEB

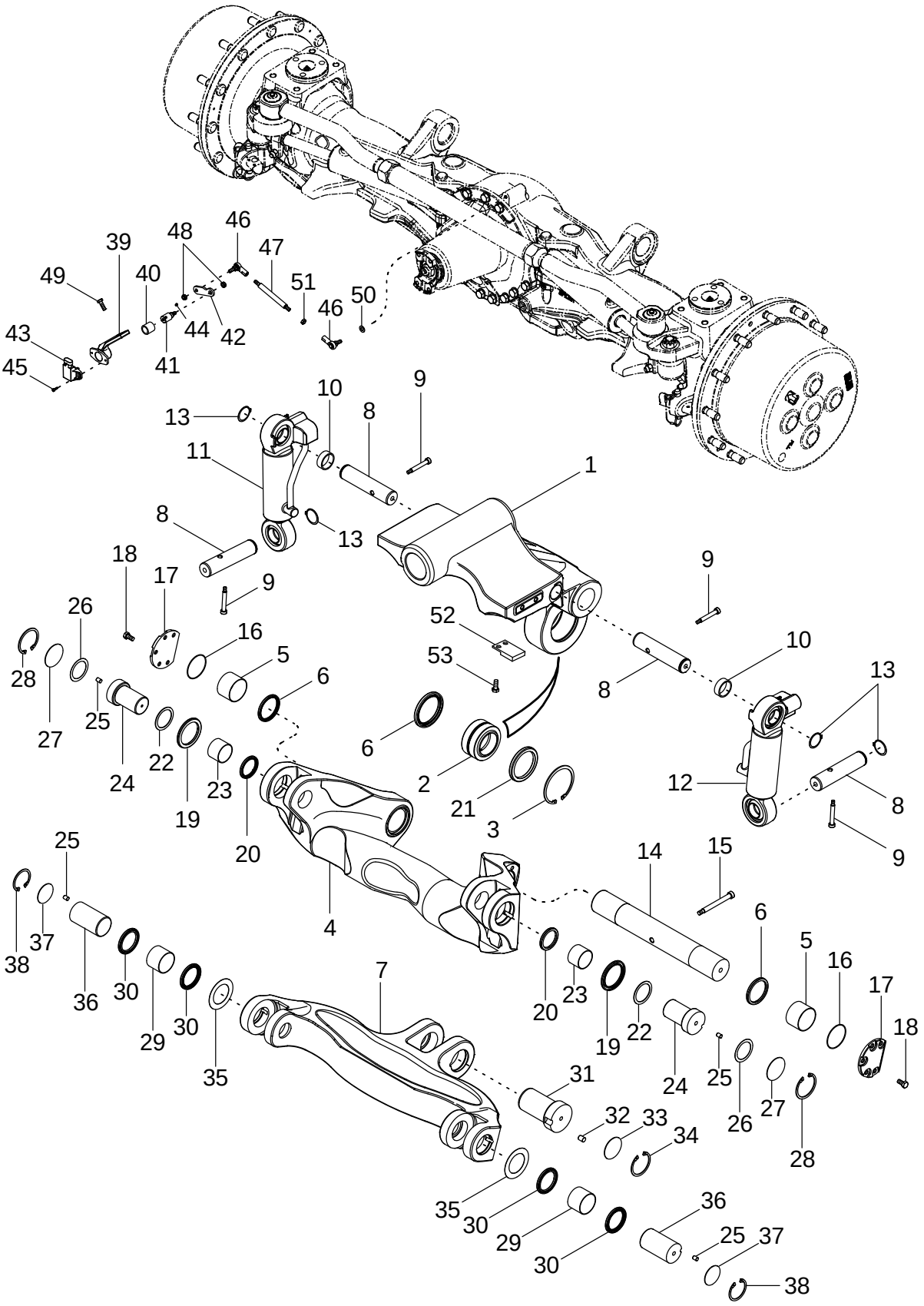

EJE DELANTERO - SUSPENSIÓN, EJE SUSPENDIDO DE LA TDM
SUSPENSÃO DO EIXO DIANTEIRO - TMD SUSPENSA
VOORAS - OPHANGING, BEWEEGBAAR OPGEHANGEN MFD
FORAKSEL - OPHÆNG, OPHÆNGT MFD

R	N	P.N.	MOD	Q	Description Denominacion	Descrizione Denominação	Description Beschrijving	Bezeichnung Beskrivelse	L.C.
49		87406503		2	SCREW TORNILLO	VITE PARAFUSO	VIS SCHROEF	SCHRAUBE SKRUE	040V
50		87406495		1	WASHER ARANDELA	ROSETTA PIANA ANILHA	RONDELLE SLUITRING	BEILAGSCHEIBE FLADSKIVE	131R
51		87406500		1	NUT TUERCA	DADO PORCA	ECROU MOER	MUTTER MØTRIK	010D
52		447672A1		2	BLOCK If Equipped BLOQUE MOTOR	BLOCCHETTO BLOCO	BLOC BLOK	BLOCK STOPKLODS	074B
53		628-10025		4	SCREW M10 x 25; 10.9 TORNILLO	VITE PARAFUSO	VIS SCHROEF	SCHRAUBE SKRUE	7450

05-10		p1	11/04

MFD AXLE HOUSING ASSEMBLY - STANDARD WITH 10 BOLT HUB, WITHOUT DIFFERENTIAL LOCK
GRUPPO DELL'ALLOGGIAMENTO DELL'ASSALE MFD - STANDARD CON MOZZO A 10 BULLONI
CARTER D'ESSIEU DU PONT AVANT STANDARD AVEC MOYEU À 10 BOULONS, SANS BLOCAGE DE DIFFÉRENTIEL
ALLRADANTRIEBS-ACHSGEHÄUSE - STANDARD MIT 10 NABENSCHRAUBEN OHNE DIFFERENTIALSPERRE

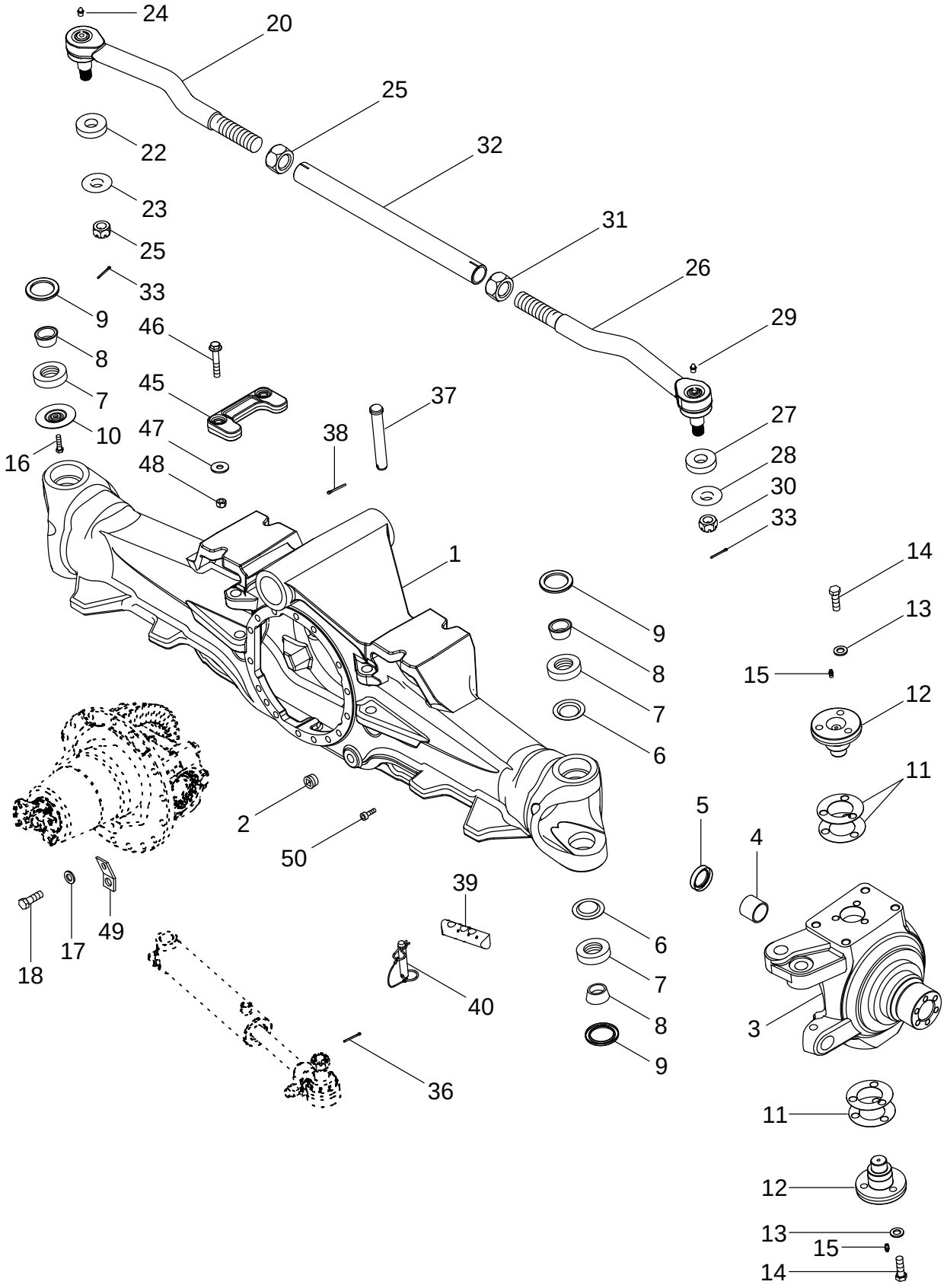

CONJUNTO DEL ALOJAMIENTO DEL EJE DE LA TDM - ESTÁNDAR CON CUBO DE 10 PERNOS, SIN BLOQUEO DEL DIFEREN
CONJUNTO DA ESTRUTURA DO EIXO DA TMD - STANDARD, COM CUBO DE 10 PARAFUSOS
MFD-ASBEHUIZING - STANDAARD MET NAAF MET 10 BOUTEN, ZONDER DIFFERENTIEELVERGRENDELING
MFD AKSELHUSSAMLING - STANDARD MED 10 BOLTNAV, UDEN DIFFERENTIALESPÆRRE

R	N	P.N.	MOD	Q	Description Denominacion	Descrizione Denominação	Description Beschrijving	Bezeichnung Beskrivelse	L.C.
		412302A6		1	AXLE ASSY, 4WD Complete With Differential And Planetaries				
						ASSALE, COMPLESSIVO	PONT AVANT	ACHSE KOMP. ALLRAD	P569
					EJE (CONJUNTO)	EIXO CONJUNTO 4WD	AXLE ASSY, 4WD	AXLE ASSY, 4WD	
1		87404246		1	HOUSING	ALLOGGIAMENTO	CARTER	GEHÄUSE	014V
					CAVIDAD	ALOJAMENTO	HUIS	HUS	
2		221-887		2	PLUG 3/4	TAPPO	BOUCHON	STOPFEN	6400
					TAPÓN	BUJAO	PLUG	PROP	
3		295163A2		1	KNUCKLE, STEERING Right Hand				
						ARTICOLAZIONE	FUSEE	ACHSSCHENKEL	4880
					CHARNELA	ARTICULACAO DIRECAC	KNUCKLE, STEERING	KNUCKLE, STEERING	
3		295162A2		1	KNUCKLE, STEERING Left Hand				
						ARTICOLAZIONE	FUSEE	ACHSSCHENKEL	4880
					CHARNELA	ARTICULACAO DIRECAC	KNUCKLE, STEERING	KNUCKLE, STEERING	
4		235628A1		1	BUSHING	BOCCOLA	BAGUE	BUECHSE	095B
					CASQUILLO	CASQUILHO	LAGERBUS	BOESNING	
5		128647A1		1	SEAL	ANELLO DI TENUTA	JOINT	DICHTUNG	132A
					ANILLO DE CIERRE	ANEL DE VEDACAO	DICHTINGSRING	PAKNINGSRING	
6		382635A1		3	RETAINER	RITEGNO	RETENEUR	HALTEVORRICHTUNG	109R
					RETENEDOR	RETENTOR	HOUDER	HOLDER	
		377919A1		4	BEARING Inc. 7, 8	CUSCINETTO	ROULEMENT	LAGER	0600
					COJINETE	ROLAMENTO	BEARING	BEARING	
7		NSS		1	NOT SERVICED SEPARATELY Ring, Inner				
						NON FORNITO SEPARAT	NON FOURNI SEPAREMI	KEIN ERSATZTEIL	064N
					NO SE REPARA SEPARA	NOT SERVICED SEPARA	NIET ALLEEN VERKRIJG	NOT SERVICED SEPARA	
8		NSS		1	NOT SERVICED SEPARATELY Ring, Outer				
						NON FORNITO SEPARAT	NON FOURNI SEPAREMI	KEIN ERSATZTEIL	064N
					NO SE REPARA SEPARA	NOT SERVICED SEPARA	NIET ALLEEN VERKRIJG	NOT SERVICED SEPARA	
9		1277270C1		4	SEAL, OIL	PARAOLIO	JOINT D'HUILE	ÖLDICHTUNG	P278
					JUNTA DE ACEITE	VEDADOR DE OLEO	OIL-SEAL	OLIESEGL	
10		382635A1		1	RETAINER If Equipped (Not Shown)				
						RITEGNO	RETENEUR	HALTEVORRICHTUNG	109R
					RETENEDOR	RETENTOR	HOUDER	HOLDER	
10		87440524		1	RETAINER If Equipped (Shown)				
						RITEGNO	RETENEUR	HALTEVORRICHTUNG	109R
					RETENEDOR	RETENTOR	HOUDER	HOLDER	
		310960A1		1	KIT, SHIM Inc. 11	KIT SPESSORE	JEU DE CALES	EINSTELLSCHEIBEN, SC	P688
					JUEGO DE CALCES	JUEGO DE CALCES	PACKAGE, SHIMS	KIT, AFSTANDSSTYKKE	
11		NSS		5	NOT SERVICED SEPARATELY Shim				
						NON FORNITO SEPARAT	NON FOURNI SEPAREMI	KEIN ERSATZTEIL	064N
					NO SE REPARA SEPARA	NOT SERVICED SEPARA	NIET ALLEEN VERKRIJG	NOT SERVICED SEPARA	
11		NSS		5	NOT SERVICED SEPARATELY Shim				
						NON FORNITO SEPARAT	NON FOURNI SEPAREMI	KEIN ERSATZTEIL	064N
					NO SE REPARA SEPARA	NOT SERVICED SEPARA	NIET ALLEEN VERKRIJG	NOT SERVICED SEPARA	
11		NSS		5	NOT SERVICED SEPARATELY Shim				
						NON FORNITO SEPARAT	NON FOURNI SEPAREMI	KEIN ERSATZTEIL	064N
					NO SE REPARA SEPARA	NOT SERVICED SEPARA	NIET ALLEEN VERKRIJG	NOT SERVICED SEPARA	
11		NSS		5	NOT SERVICED SEPARATELY Shim				
						NON FORNITO SEPARAT	NON FOURNI SEPAREMI	KEIN ERSATZTEIL	064N
					NO SE REPARA SEPARA	NOT SERVICED SEPARA	NIET ALLEEN VERKRIJG	NOT SERVICED SEPARA	

05-10		p2	11/04

MFD AXLE HOUSING ASSEMBLY - STANDARD WITH 10 BOLT HUB, WITHOUT DIFFERENTIAL LOCK
GRUPPO DELL'ALLOGGIAMENTO DELL'ASSALE MFD - STANDARD CON MOZZO A 10 BULLONI
CARTER D'ESSIEU DU PONT AVANT STANDARD AVEC MOYEU À 10 BOULONS, SANS BLOCAGE DE DIFFÉRENTIEL
ALLRADANTRIEBS-ACHSGEHÄUSE - STANDARD MIT 10 NABENSCHRAUBEN OHNE DIFFERENTIALSPERRE

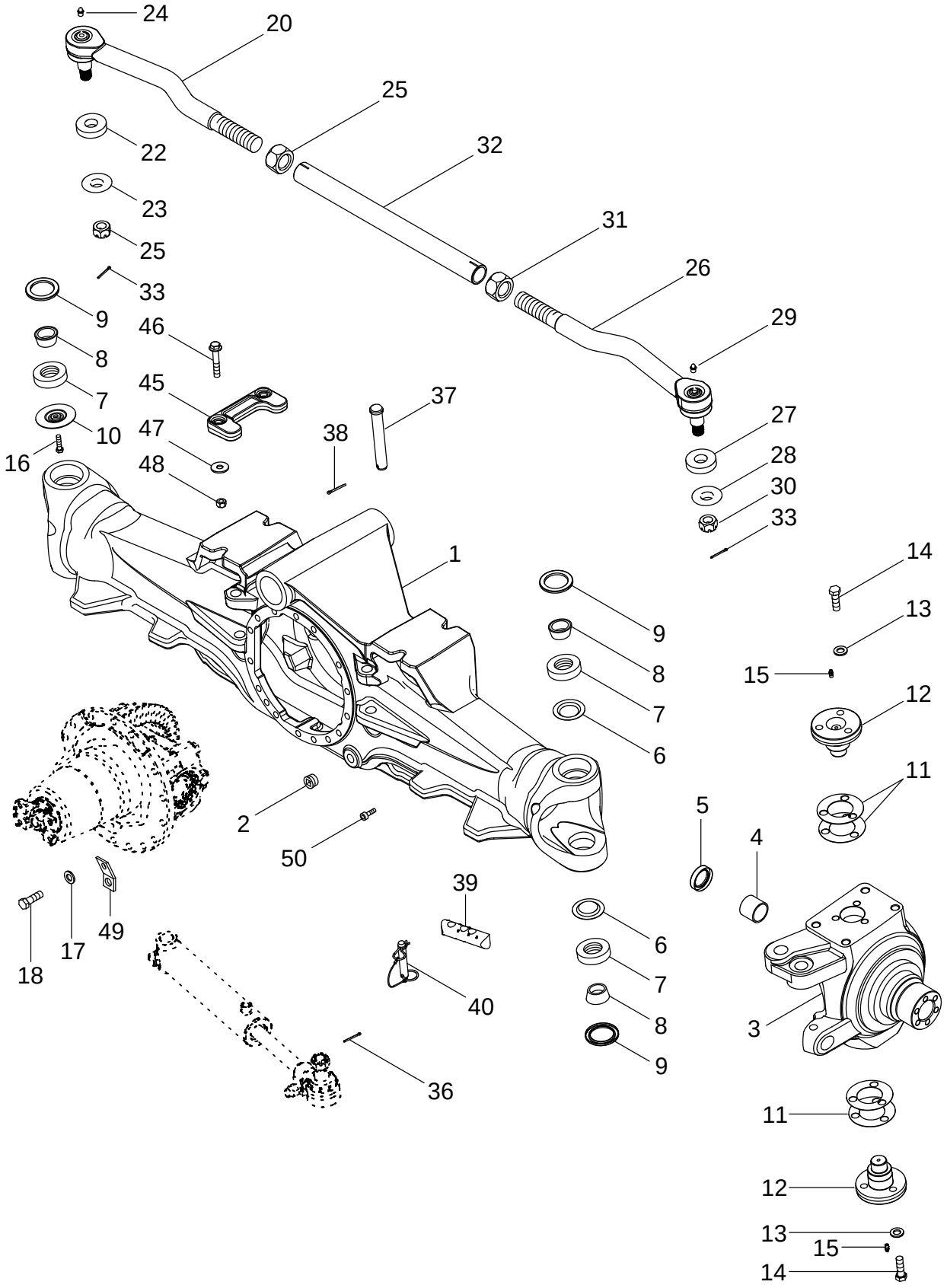

CONJUNTO DEL ALOJAMIENTO DEL EJE DE LA TDM - ESTÁNDAR CON CUBO DE 10 PERNOS, SIN BLOQUEO DEL DIFEREN
CONJUNTO DA ESTRUTURA DO EIXO DA TMD - STANDARD, COM CUBO DE 10 PARAFUSOS
MFD-ASBEHUIZING - STANDAARD MET NAAF MET 10 BOUTEN, ZONDER DIFFERENTIEELVERGRENDELING
MFD AKSELHUSSAMLING - STANDARD MED 10 BOLTNAV, UDEN DIFFERENTIALESPÆRRE

R	N	P.N.	MOD	Q	Description Denominacion	Descrizione Denominação	Description Beschrijving	Bezeichnung Beskrivelse	L.C.
11		NSS		5	NOT SERVICED SEPARATELY Shim				
						NON FORNITO SEPARAT	NON FOURNI SEPAREMI	KEIN ERSATZTEIL	064N
					NO SE REPARA SEPARA	NOT SERVICED SEPARA	NIET ALLEEN VERKRIJG	NOT SERVICED SEPARA	
11		NSS		5	NOT SERVICED SEPARATELY Shim				
						NON FORNITO SEPARAT	NON FOURNI SEPAREMI	KEIN ERSATZTEIL	064N
					NO SE REPARA SEPARA	NOT SERVICED SEPARA	NIET ALLEEN VERKRIJG	NOT SERVICED SEPARA	
12		378409A1		4	CAP	TAPPO SERBATOIO	CHAPEAU	KAPPE	052T
					TAPON DEL DEPOSITO	TAMPAO DE RESERVAT	RESERVOIRDOP	TANKDAEKSEL	
13		896-11014		12	WASHER 15,5 x 28 x 3 mm	ROSETTA PIANA	RONDELLE	SCHEIBE	9720
					ARANDELA	ANILHA	SLUITRING	FLADSKIVE	
14		627-14045		12	SCREW M14 x 45; 10,9	VITE	VIS	SCHRAUBE	7450
					TORNILLO	PARAFUSO	SCHROEF	SKRUE	
15		219-1		4	NIPPLE, LUBE 1/8 PT x 21/32				
						INGRASSATORE	GRAISSEUR	SCHMIERNIPPEL	060I
					ENGRASADOR	LUBRIFICADOR	SMEERNIPPEL	SMØRENIPPEL	
16		86977726		1	SCREW M6 x 12; 8.8, If Equipped				
						VITE	VIS	SCHRAUBE	040V
					TORNILLO	PARAFUSO	SCHROEF	SKRUE	
17		896-11014		16	WASHER 15,5 x 28 x 3 mm	ROSETTA PIANA	RONDELLE	SCHEIBE	9720
					ARANDELA	ANILHA	SLUITRING	FLADSKIVE	
18		627-14045		16	SCREW M14 x 45; 10,9	VITE	VIS	SCHRAUBE	7450
					TORNILLO	PARAFUSO	SCHROEF	SKRUE	
20		302643A1	a	1	BALL JOINT Left Hand Threads, Inc. 21 - 24				
						GIUNTO SFERICO	ROTULE	KUGELGELENK	070G
					JUNTA DE ROTULA	JUNTA ESFÉRICA	KOGELGEWRICHT	KUGLELED	
20		87455778	b	1	JOINT ASSY. Left Hand Threads, Inc. 21 - 24				
						UNIVERSALE UNITO ASS	JOINT-CARDAN ASS.	GELENK (KPLT.)	P548
					UNION (CONJUNTO)	UNIAO CONJUNTO	JOINT ASSY.	JOINT ASSY.	
		333617A1	a	1	KIT, GASKET Inc. 21, 22	CONFEZIONE, GUARNIZ	JEU JOINTS ETANCHEIT	DICHTUNGSSATZ	3740
					EMPAQUE DE JUNTAS	JOGO DE JUNTAS	KIT, GASKET	PAKNINGS PAKKE	
		87455780	b	1	KIT Inc. 21, 22	CORREDO	KIT	SATZ	305C
					EQUIPO	KIT	KIT	UDSTYR	
21		NSS		1	NOT SERVICED SEPARATELY Boot				
						NON FORNITO SEPARAT	NON FOURNI SEPAREMI	KEIN ERSATZTEIL	064N
					NO SE REPARA SEPARA	NOT SERVICED SEPARA	NIET ALLEEN VERKRIJG	NOT SERVICED SEPARA	
22		NSS		1	NOT SERVICED SEPARATELY Spacer				
						NON FORNITO SEPARAT	NON FOURNI SEPAREMI	KEIN ERSATZTEIL	064N
					NO SE REPARA SEPARA	NOT SERVICED SEPARA	NIET ALLEEN VERKRIJG	NOT SERVICED SEPARA	
23		429-1314	a	1	SLOTTED NUT 7/8 NF; 8	DADO SCANALATO	ECROU A ENCOCHES	SCHLITZMUTTER	Z477
					TUERCA ENTALLADA	PORCA ENTALHADA	SLOTTED NUT	KÆRVMØTRIK	
23		87455806	b	1	SLOTTED NUT M22	DADO SCANALATO	ECROU A ENCOCHES	SCHLITZMUTTER	Z477
					TUERCA ENTALLADA	PORCA ENTALHADA	SLOTTED NUT	KÆRVMØTRIK	
24		219-6	a	1	FITTING Grease 1/4 str	RACCORDO	RACCORD	ANSCHLUSSSTÜCK	3300
					CONEXION	CONEXAO	FITTING	FITTING	
24		87455807	b	1	FITTING Grease	RACCORDO	RACCORD	ANSCHLUSSSTÜCK	3300
					CONEXION	CONEXAO	FITTING	FITTING	

(a) BSN FUSA6300017
(b) ASN FUSA6300017

05-10		p3	11/04

MFD AXLE HOUSING ASSEMBLY - STANDARD WITH 10 BOLT HUB, WITHOUT DIFFERENTIAL LOCK
GRUPPO DELL'ALLOGGIAMENTO DELL'ASSALE MFD - STANDARD CON MOZZO A 10 BULLONI
CARTER D'ESSIEU DU PONT AVANT STANDARD AVEC MOYEU À 10 BOULONS, SANS BLOCAGE DE DIFFÉRENTIEL
ALLRADANTRIEBS-ACHSGEHÄUSE - STANDARD MIT 10 NABENSCHRAUBEN OHNE DIFFERENTIALSPERRE

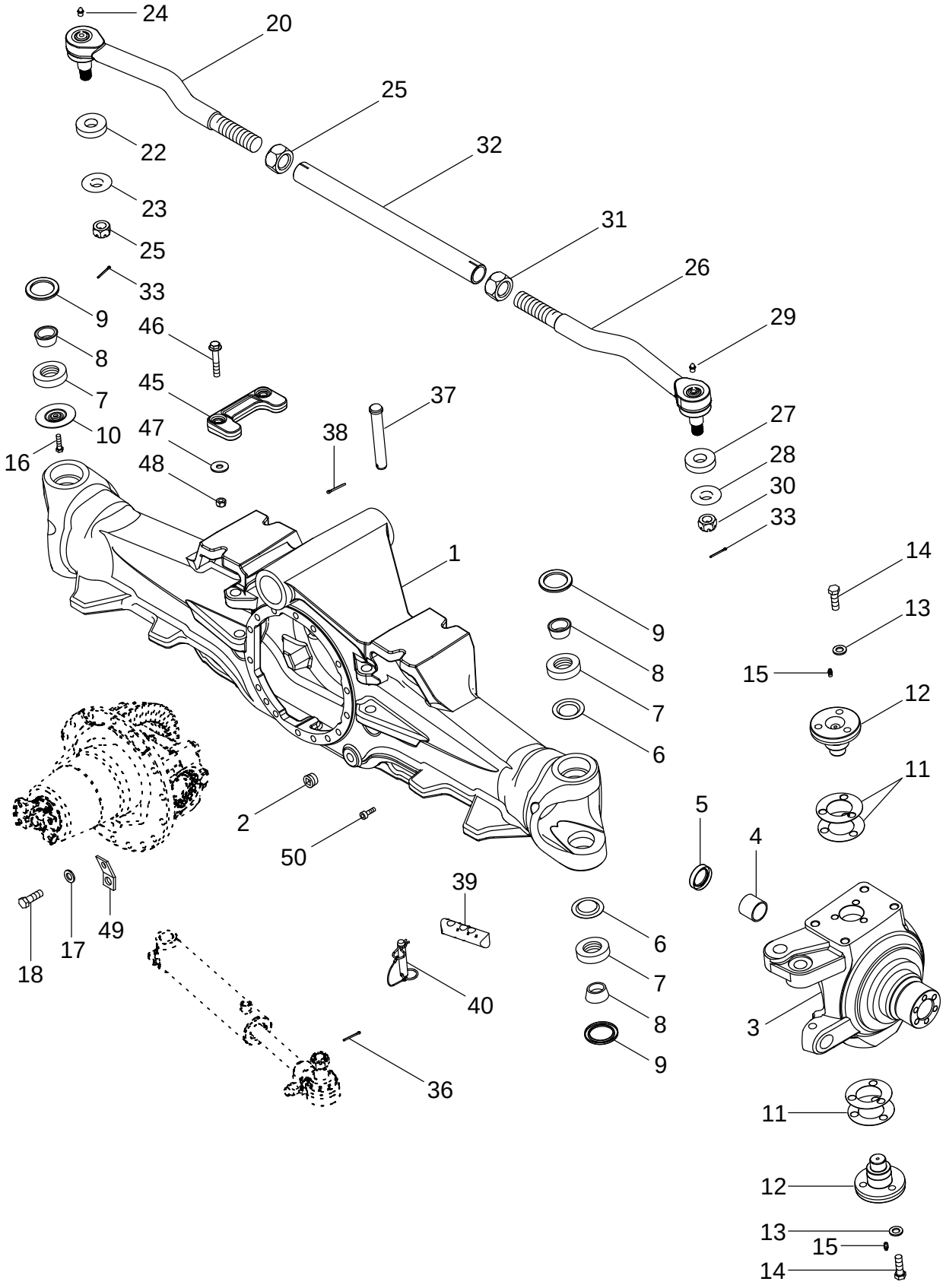

CONJUNTO DEL ALOJAMIENTO DEL EJE DE LA TDM - ESTÁNDAR CON CUBO DE 10 PERNOS, SIN BLOQUEO DEL DIFEREN
CONJUNTO DA ESTRUTURA DO EIXO DA TMD - STANDARD, COM CUBO DE 10 PARAFUSOS
MFD-ASBEHUIZING - STANDAARD MET NAAF MET 10 BOUTEN, ZONDER DIFFERENTIEELVERGRENDELING
MFD AKSELHUSSAMLING - STANDARD MED 10 BOLTNAV, UDEN DIFFERENTIALESPÆRRE

R	N	P.N.	MOD	Q	Description Denominacion	Descrizione Denominação	Description Beschrijving	Bezeichnung Beskrivelse	L.C.
25		302648A1	a	1	NUT 1-3/8, Left Hand Threads				
						DADO	ECROU	MUTTER	010D
					TUERCA	PORCA	MOER	MØTRIK	
25		87455777	b	1	NUT M36, Left Hand Threads				
						DADO	ECROU	MUTTER	010D
					TUERCA	PORCA	MOER	MØTRIK	
26		302645A1	a	1	BALL JOINT Right Hand Threads, Inc. 27 - 30				
						GIUNTO SFERICO	ROTULE	KUGELGELENK	070G
					JUNTA DE ROTULA	JUNTA ESFÉRICA	KOGELGEWRICHT	KUGLELED	
26		87455779	b	1	JOINT ASSY. Right Hand Threads, Inc. 27 - 30				
						UNIVERSALE UNITO ASS	JOINT-CARDAN ASS.	GELENK (KPLT.)	P548
					UNION (CONJUNTO)	UNIAO CONJUNTO	JOINT ASSY.	JOINT ASSY.	
		333617A1	a	1	KIT, GASKET Inc. 27, 28	CONFEZIONE, GUARNIZ	JEU JOINTS ETANCHEIT	DICHTUNGSSATZ	3740
					EMPAQUE DE JUNTAS	JOGO DE JUNTAS	KIT, GASKET	PAKNINGS PAKKE	
		87455780	b	1	KIT Inc. 27, 28	CORREDO	KIT	SATZ	305C
					EQUIPO	KIT	KIT	UDSTYR	
27		NSS		1	NOT SERVICED SEPARATELY Boot				
						NON FORNITO SEPARAT	NON FOURNI SEPAREMI	KEIN ERSATZTEIL	064N
					NO SE REPARA SEPARA	NOT SERVICED SEPARA	NIET ALLEEN VERKRIJG	NOT SERVICED SEPARA	
28		NSS		1	NOT SERVICED SEPARATELY Spacer				
						NON FORNITO SEPARAT	NON FOURNI SEPAREMI	KEIN ERSATZTEIL	064N
					NO SE REPARA SEPARA	NOT SERVICED SEPARA	NIET ALLEEN VERKRIJG	NOT SERVICED SEPARA	
29		219-6	a	1	FITTING Grease 1/4 str	RACCORDO	RACCORD	ANSCHLUSSSTÜCK	3300
					CONEXION	CONEXAO	FITTING	FITTING	
29		87455807	b	1	FITTING Grease	RACCORDO	RACCORD	ANSCHLUSSSTÜCK	3300
					CONEXION	CONEXAO	FITTING	FITTING	
30		429-1314	a	1	SLOTTED NUT 7/8 NF; 8	DADO SCANALATO	ECROU A ENCOCHES	SCHLITZMUTTER	Z477
					TUERCA ENTALLADA	PORCA ENTALHADA	SLOTTED NUT	KÆRVMØTRIK	
30		87455806	b	1	SLOTTED NUT M22	DADO SCANALATO	ECROU A ENCOCHES	SCHLITZMUTTER	Z477
					TUERCA ENTALLADA	PORCA ENTALHADA	SLOTTED NUT	KÆRVMØTRIK	
31		302649A1	a	1	NUT 1-3/8, Right Hand Threads				
						DADO	ECROU	MUTTER	010D
					TUERCA	PORCA	MOER	MØTRIK	
31		87455776	b	1	NUT M36, Right Hand Threads				
						DADO	ECROU	MUTTER	010D
					TUERCA	PORCA	MOER	MØTRIK	
32		302647A1	a	1	TUBE	TUBETTO	TUBE	SCHLAUCH	195T
					TUBO	TUBO	BUISJE	RØR	
32		87455775	b	1	TUBE	TUBETTO	TUBE	SCHLAUCH	195T
					TUBO	TUBO	BUISJE	RØR	
33		432-820		2	PIN, SPLIT (COTTER) 1/8 x 1-1/4				
						COPPIGLIA	GOUPILLE	SPLINT	270C
					PASADOR ABIERTO	TROCO DE ABRIR	SPLITPEN	SPLITBOLT	
36		432-820		2	PIN, SPLIT (COTTER) 1/8 x 1-1/4				
						COPPIGLIA	GOUPILLE	SPLINT	270C
					PASADOR ABIERTO	TROCO DE ABRIR	SPLITPEN	SPLITBOLT	

(a) BSN FUSA6300017
(b) ASN FUSA6300017

MFD AXLE HOUSING ASSEMBLY - STANDARD WITH 10 BOLT HUB, WITHOUT DIFFERENTIAL LOCK
GRUPPO DELL'ALLOGGIAMENTO DELL'ASSALE MFD - STANDARD CON MOZZO A 10 BULLONI
CARTER D'ESSIEU DU PONT AVANT STANDARD AVEC MOYEU À 10 BOULONS, SANS BLOCAGE DE DIFFÉRENTIEL
ALLRADANTRIEBS-ACHSGEHÄUSE - STANDARD MIT 10 NABENSCHRAUBEN OHNE DIFFERENTIALSPERRE

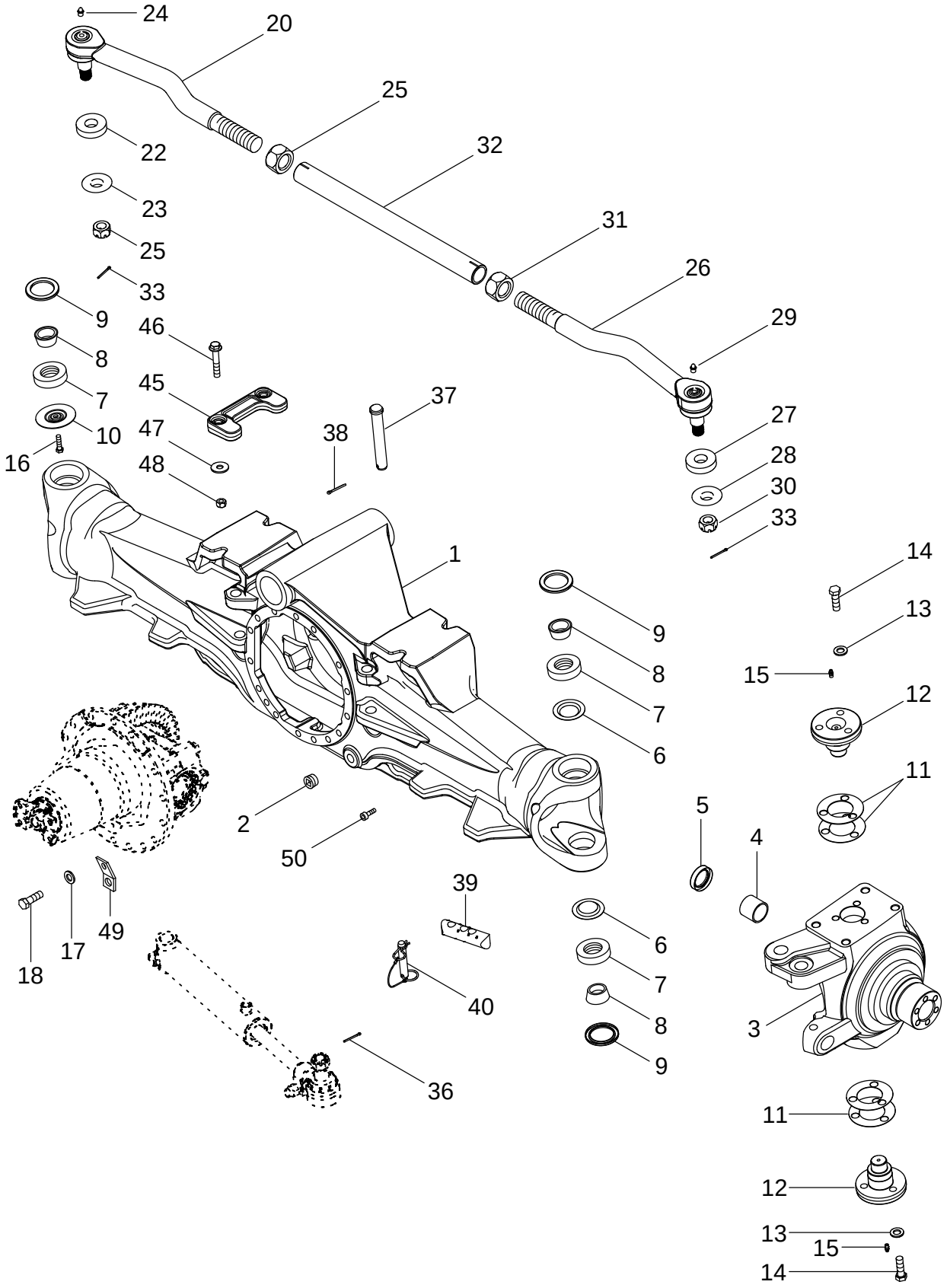

CONJUNTO DEL ALOJAMIENTO DEL EJE DE LA TDM - ESTÁNDAR CON CUBO DE 10 PERNOS, SIN BLOQUEO DEL DIFEREN
CONJUNTO DA ESTRUTURA DO EIXO DA TMD - STANDARD, COM CUBO DE 10 PARAFUSOS
MFD-ASBEHUIZING - STANDAARD MET NAAF MET 10 BOUTEN, ZONDER DIFFERENTIEELVERGRENDELING
MFD AKSELHUSSAMLING - STANDARD MED 10 BOLTNAV, UDEN DIFFERENTIALESPÆRRE

R	N	P.N.	MOD	Q	Description Denominacion	Descrizione Denominação	Description Beschrijving	Bezeichnung Beskrivelse	L.C.
37		292565A1		2	PIN, LARGE BULON/PIN, LARGO	SPINA, GRANDE PINO LARGO	AXE, GROS PIN, LARGE	BOLZEN, GROSS STOR PIND	Z009
38		733-4032		2	PIN, SPLIT (COTTER) 4 x 32 mm PASADOR ABIERTO	COPPIGLIA TROCO DE ABRIR	GOUPILLE SPLITPEN	SPLINT SPLITBOLT	270C
39		281914A1		2	ROD Steering Stop, Short, 3 Hole (Shown) VARILLA	ASTA HASTE	TRINGLE STANG	STANGE STANG	090A
39		451995A1		2	ROD, ADJUSTMENT Steering Stop, Long, 4 Hole (Not Shown) VARILLA DE REGLAJE	ASTA DI REGOLAZIONE TIRANTE DE AFINACAO	TRINGLE DE RÉGLAGE REGELBARE STANG	EINSTELLSTANGE JUSTERSTANG	088A
40		87404993		2	PIN, AXLE PIVOTE DE EJE	PERNO DELL'ASSALE PIVOTE DE EJE	PIVOT D'ESSIEU PIN, AXLE	ACHSBOLZEN AKSELPIND	Z160
45		297333A2		2	BLOCK ASSY. BLOQUE (CONJUNTO)	BOZZELLO, COMPL. BLOCO CONJUNTO	BLOC (ASSEMBLE) BLOCK ASSY.	BLOCK (KPLT.) BLOCK ASSY.	P503
46		844-12070		4	SCREW M12 x 70; 8.8 TORNILLO	VITE PARAFUSO	VIS SCHROEF	SCHRAUBE SKRUE	7450
47		495-21069		4	WASHER 11/16 x 1-3/4 x 9/64 ARANDELA	ROSETTA PIANA ANILHA	RONDELLE SLUITRING	SCHEIBE FLADSKIVE	9720
48		829-1412		4	NUT M12; 10 TUERCA	DADO PORCA	ECROU MOER	MUTTER MØTRIK	5780
49		352782A1		1	STRAP BANDA	BANDELLA BANDA	SANGLE RIEM	GURT STROP	532B
50		863-8020		2	SCREW M8 x 20; 12.9 TORNILLO	VITE PARAFUSO	VIS SCHROEF	SCHRAUBE SKRUE	7450

05-11		p1	11/04

MFD AXLE HOUSING ASSEMBLY - STANDARD WITH 10 BOLT HUB, WITH DIFFERENTIAL LOCK
GRUPPO DELL'ALLOGGIAMENTO DELL'ASSALE MFD - STANDARD CON MOZZO A 10 BULLONI,
CARTER D'ESSIEU DU PONT AVANT STANDARD AVEC MOYEU À 10 BOULONS, AVEC BLOCAGE DE DIFFÉRENTIEL
ALLRADANTRIEBS-ACHSGEHÄUSE - STANDARD MIT 10 NABENSCHRAUBEN MIT DIFFERENTIALSPERRE

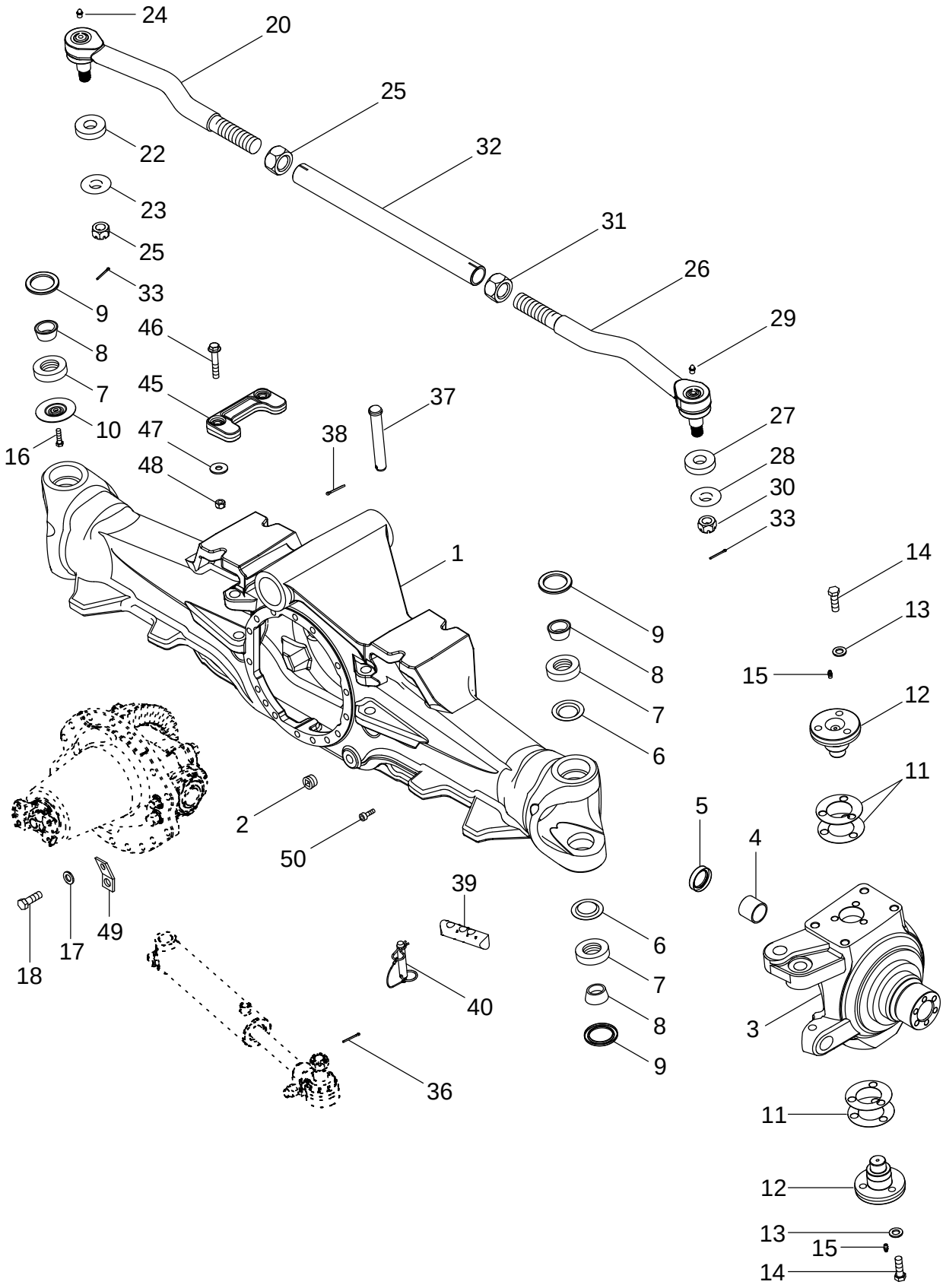

CONJUNTO DEL ALOJAMIENTO DEL EJE DE LA TDM - ESTÁNDAR CON CUBO DE 10 PERNOS
CONJUNTO DA ESTRUTURA DO EIXO DA TMD - STANDARD, COM CUBO DE 10 PARAFUSOS, COM TRANCA DO DIFERENCIAL
MFD-ASBEHUIZING - STANDAARD MET NAAF MET 10 BOUTEN, MET DIFFERENTIEELVERGRENDELING
MFD AKSELHUSSAMLING - STANDARD MED 10 BOLTNAV, MED DIFFERENTIALESPÆRRE

R	N	P.N.	MOD	Q	Description Denominacion	Descrizione Denominação	Description Beschrijving	Bezeichnung Beskrivelse	L.C.
		407310A6		1	AXLE ASSY, 4WD Complete With Differential And Planetaries				
						ASSALE, COMPLESSIVO	PONT AVANT	ACHSE KOMP. ALLRAD	P569
					EJE (CONJUNTO)	EIXO CONJUNTO 4WD	AXLE ASSY, 4WD	AXLE ASSY, 4WD	
1		87404246		1	HOUSING	ALLOGGIAMENTO	CARTER	GEHÄUSE	014V
					CAVIDAD	ALOJAMENTO	HUIS	HUS	
2		221-887		2	PLUG 3/4	TAPPO	BOUCHON	STOPFEN	6400
					TAPÓN	BUJAO	PLUG	PROP	
3		295163A2		1	KNUCKLE, STEERING Right Hand				
						ARTICOLAZIONE	FUSEE	ACHSSCHENKEL	4880
					CHARNELA	ARTICULACAO DIRECAC	KNUCKLE, STEERING	KNUCKLE, STEERING	
3		295162A2		1	KNUCKLE, STEERING Left Hand				
						ARTICOLAZIONE	FUSEE	ACHSSCHENKEL	4880
					CHARNELA	ARTICULACAO DIRECAC	KNUCKLE, STEERING	KNUCKLE, STEERING	
4		235628A1		1	BUSHING	BOCCOLA	BAGUE	BUECHSE	095B
					CASQUILLO	CASQUILHO	LAGERBUS	BOESNING	
5		128647A1		1	SEAL	ANELLO DI TENUTA	JOINT	DICHTUNG	132A
					ANILLO DE CIERRE	ANEL DE VEDACAO	DICHTINGSRING	PAKNINGSRING	
6		382635A1		3	RETAINER	RITEGNO	RETENEUR	HALTEVORRICHTUNG	109R
					RETENEDOR	RETENTOR	HOUDER	HOLDER	
		377919A1		4	BEARING Inc. 7, 8	CUSCINETTO	ROULEMENT	LAGER	0600
					COJINETE	ROLAMENTO	BEARING	BEARING	
7		NSS		1	NOT SERVICED SEPARATELY Ring, Inner				
						NON FORNITO SEPARAT	NON FOURNI SEPAREMI	KEIN ERSATZTEIL	064N
					NO SE REPARA SEPARA	NOT SERVICED SEPARA	NIET ALLEEN VERKRIJG	NOT SERVICED SEPARA	
8		NSS		1	NOT SERVICED SEPARATELY Ring, Outer				
						NON FORNITO SEPARAT	NON FOURNI SEPAREMI	KEIN ERSATZTEIL	064N
					NO SE REPARA SEPARA	NOT SERVICED SEPARA	NIET ALLEEN VERKRIJG	NOT SERVICED SEPARA	
9		1277270C1		4	SEAL, OIL	PARAOLIO	JOINT D'HUILE	ÖLDICHTUNG	P278
					JUNTA DE ACEITE	VEDADOR DE OLEO	OIL-SEAL	OLIESEGL	
10		382635A1		1	RETAINER If Equipped (Not Shown)				
						RITEGNO	RETENEUR	HALTEVORRICHTUNG	109R
					RETENEDOR	RETENTOR	HOUDER	HOLDER	
10		87440524		1	RETAINER If Equipped (Shown)				
						RITEGNO	RETENEUR	HALTEVORRICHTUNG	109R
					RETENEDOR	RETENTOR	HOUDER	HOLDER	
		310960A1		1	KIT, SHIM Inc. 11	KIT SPESSORE	JEU DE CALES	EINSTELLSCHEIBEN, SC	P688
					JUEGO DE CALCES	JUEGO DE CALCES	PACKAGE, SHIMS	KIT, AFSTANDSSTYKKE	
11		NSS		5	NOT SERVICED SEPARATELY Shim				
						NON FORNITO SEPARAT	NON FOURNI SEPAREMI	KEIN ERSATZTEIL	064N
					NO SE REPARA SEPARA	NOT SERVICED SEPARA	NIET ALLEEN VERKRIJG	NOT SERVICED SEPARA	
11		NSS		5	NOT SERVICED SEPARATELY Shim				
						NON FORNITO SEPARAT	NON FOURNI SEPAREMI	KEIN ERSATZTEIL	064N
					NO SE REPARA SEPARA	NOT SERVICED SEPARA	NIET ALLEEN VERKRIJG	NOT SERVICED SEPARA	
11		NSS		5	NOT SERVICED SEPARATELY Shim				
						NON FORNITO SEPARAT	NON FOURNI SEPAREMI	KEIN ERSATZTEIL	064N
					NO SE REPARA SEPARA	NOT SERVICED SEPARA	NIET ALLEEN VERKRIJG	NOT SERVICED SEPARA	
11		NSS		5	NOT SERVICED SEPARATELY Shim				
						NON FORNITO SEPARAT	NON FOURNI SEPAREMI	KEIN ERSATZTEIL	064N
					NO SE REPARA SEPARA	NOT SERVICED SEPARA	NIET ALLEEN VERKRIJG	NOT SERVICED SEPARA	

05-11		p2	11/04

MFD AXLE HOUSING ASSEMBLY - STANDARD WITH 10 BOLT HUB, WITH DIFFERENTIAL LOCK
GRUPPO DELL'ALLOGGIAMENTO DELL'ASSALE MFD - STANDARD CON MOZZO A 10 BULLONI,
CARTER D'ESSIEU DU PONT AVANT STANDARD AVEC MOYEU À 10 BOULONS, AVEC BLOCAGE DE DIFFÉRENTIEL
ALLRADANTRIEBS-ACHSGEHÄUSE - STANDARD MIT 10 NABENSCHRAUBEN MIT DIFFERENTIALSPERRE

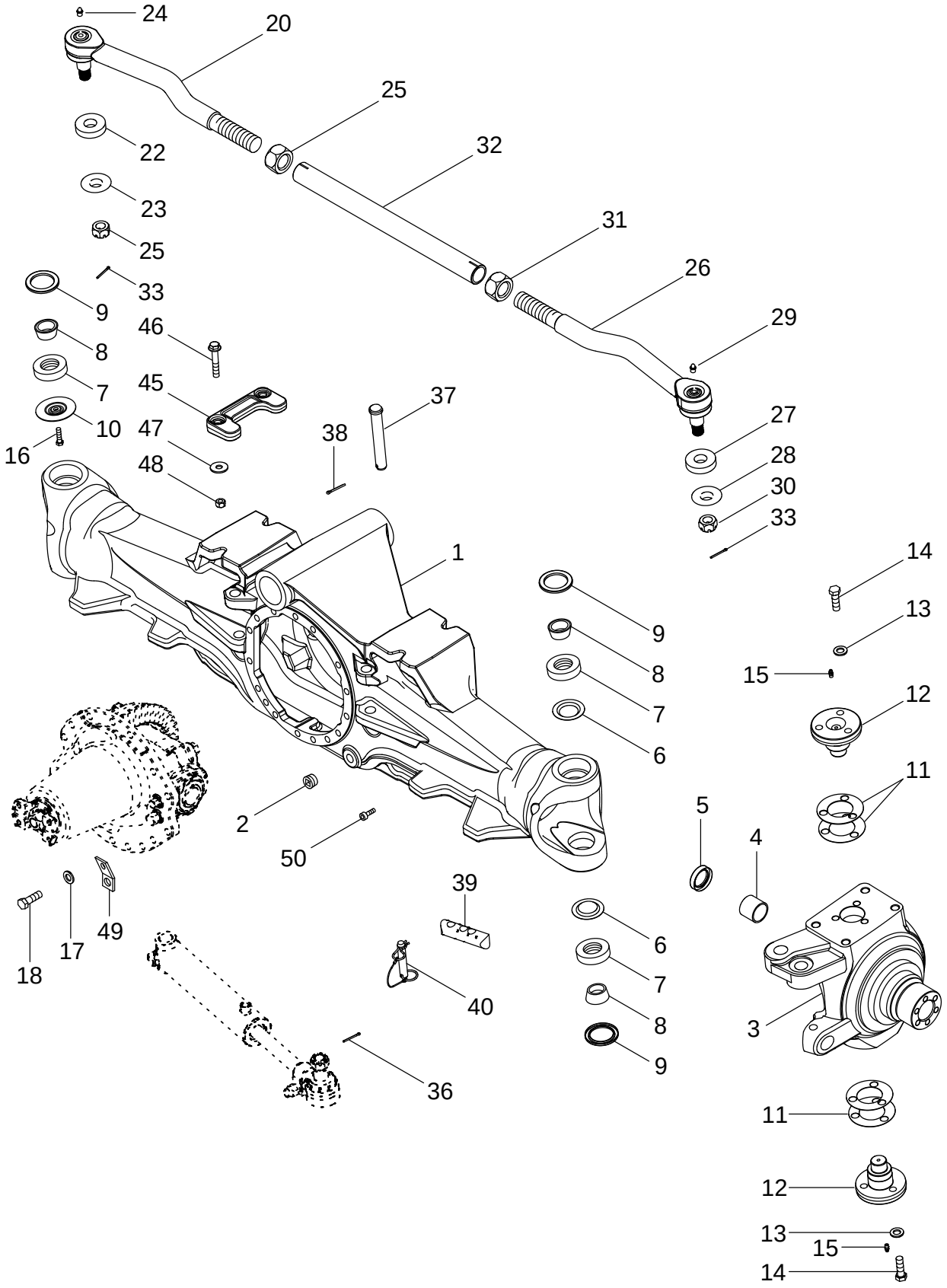

CONJUNTO DEL ALOJAMIENTO DEL EJE DE LA TDM - ESTÁNDAR CON CUBO DE 10 PERNOS
CONJUNTO DA ESTRUTURA DO EIXO DA TMD - STANDARD, COM CUBO DE 10 PARAFUSOS, COM TRANCA DO DIFERENCIAL
MFD-ASBEHUIZING - STANDAARD MET NAAF MET 10 BOUTEN, MET DIFFERENTIEELVERGRENDELING
MFD AKSELHUSSAMLING - STANDARD MED 10 BOLTNAV, MED DIFFERENTIALESPÆRRE

R	N	P.N.	MOD	Q	Description Denominacion	Descrizione Denominação	Description Beschrijving	Bezeichnung Beskrivelse	L.C.
11		NSS		5	NOT SERVICED SEPARATELY Shim				
						NON FORNITO SEPARAT	NON FOURNI SEPAREMI	KEIN ERSATZTEIL	064N
					NO SE REPARA SEPARA	NOT SERVICED SEPARA	NIET ALLEEN VERKRIJG	NOT SERVICED SEPARA	
11		NSS		5	NOT SERVICED SEPARATELY Shim				
						NON FORNITO SEPARAT	NON FOURNI SEPAREMI	KEIN ERSATZTEIL	064N
					NO SE REPARA SEPARA	NOT SERVICED SEPARA	NIET ALLEEN VERKRIJG	NOT SERVICED SEPARA	
12		378409A1		4	CAP	TAPPO SERBATOIO	CHAPEAU	KAPPE	052T
					TAPON DEL DEPOSITO	TAMPAO DE RESERVAT	RESERVOIRDOP	TANKDAEKSEL	
13		896-11014		12	WASHER 15,5 x 28 x 3 mm	ROSETTA PIANA	RONDELLE	SCHEIBE	9720
					ARANDELA	ANILHA	SLUITRING	FLADSKIVE	
14		627-14045		12	SCREW M14 x 45; 10,9	VITE	VIS	SCHRAUBE	7450
					TORNILLO	PARAFUSO	SCHROEF	SKRUE	
15		219-1		4	NIPPLE, LUBE 1/8 PT x 21/32				
						INGRASSATORE	GRAISSEUR	SCHMIERNIPPEL	060I
					ENGRASADOR	LUBRIFICADOR	SMEERNIPPEL	SMØRENIPPEL	
16		86977726		1	SCREW M6 x 12; 8.8, If Equipped				
						VITE	VIS	SCHRAUBE	040V
					TORNILLO	PARAFUSO	SCHROEF	SKRUE	
17		896-11014		16	WASHER 15,5 x 28 x 3 mm	ROSETTA PIANA	RONDELLE	SCHEIBE	9720
					ARANDELA	ANILHA	SLUITRING	FLADSKIVE	
18		627-14045		16	SCREW M14 x 45; 10,9	VITE	VIS	SCHRAUBE	7450
					TORNILLO	PARAFUSO	SCHROEF	SKRUE	
20		302643A1	a	1	BALL JOINT Left Hand Threads, Inc. 21 - 24				
						GIUNTO SFERICO	ROTULE	KUGELGELENK	070G
					JUNTA DE ROTULA	JUNTA ESFÉRICA	KOGELGEWRICHT	KUGLELED	
20		87455778	b	1	JOINT ASSY. Left Hand Threads, Inc. 21 - 24				
						UNIVERSALE UNITO ASS	JOINT-CARDAN ASS.	GELENK (KPLT.)	P548
					UNION (CONJUNTO)	UNIAO CONJUNTO	JOINT ASSY.	JOINT ASSY.	
		333617A1	a	1	KIT, GASKET Inc. 21, 22	CONFEZIONE, GUARNIZ	JEU JOINTS ETANCHEIT	DICHTUNGSSATZ	3740
					EMPAQUE DE JUNTAS	JOGO DE JUNTAS	KIT, GASKET	PAKNINGS PAKKE	
		87455780	b	1	KIT Inc. 21, 22	CORREDO	KIT	SATZ	305C
					EQUIPO	KIT	KIT	UDSTYR	
21		NSS		1	NOT SERVICED SEPARATELY Boot				
						NON FORNITO SEPARAT	NON FOURNI SEPAREMI	KEIN ERSATZTEIL	064N
					NO SE REPARA SEPARA	NOT SERVICED SEPARA	NIET ALLEEN VERKRIJG	NOT SERVICED SEPARA	
22		NSS		1	NOT SERVICED SEPARATELY Spacer				
						NON FORNITO SEPARAT	NON FOURNI SEPAREMI	KEIN ERSATZTEIL	064N
					NO SE REPARA SEPARA	NOT SERVICED SEPARA	NIET ALLEEN VERKRIJG	NOT SERVICED SEPARA	
23		429-1314	a	1	SLOTTED NUT 7/8 NF; 8	DADO SCANALATO	ECROU A ENCOCHES	SCHLITZMUTTER	Z477
					TUERCA ENTALLADA	PORCA ENTALHADA	SLOTTED NUT	KÆRVMØTRIK	
23		87455806	b	1	SLOTTED NUT M22	DADO SCANALATO	ECROU A ENCOCHES	SCHLITZMUTTER	Z477
					TUERCA ENTALLADA	PORCA ENTALHADA	SLOTTED NUT	KÆRVMØTRIK	
24		219-6	a	1	FITTING Grease 1/4 str	RACCORDO	RACCORD	ANSCHLUSSSTÜCK	3300
					CONEXION	CONEXAO	FITTING	FITTING	
24		87455807	b	1	FITTING Grease	RACCORDO	RACCORD	ANSCHLUSSSTÜCK	3300
					CONEXION	CONEXAO	FITTING	FITTING	

(a) BSN FUSA6600001
(b) ASN FUSA6600001

MFD AXLE HOUSING ASSEMBLY - STANDARD WITH 10 BOLT HUB, WITH DIFFERENTIAL LOCK
GRUPPO DELL'ALLOGGIAMENTO DELL'ASSALE MFD - STANDARD CON MOZZO A 10 BULLONI,
CARTER D'ESSIEU DU PONT AVANT STANDARD AVEC MOYEU À 10 BOULONS, AVEC BLOCAGE DE DIFFÉRENTIEL
ALLRADANTRIEBS-ACHSGEHÄUSE - STANDARD MIT 10 NABENSCHRAUBEN MIT DIFFERENTIALSPERRE

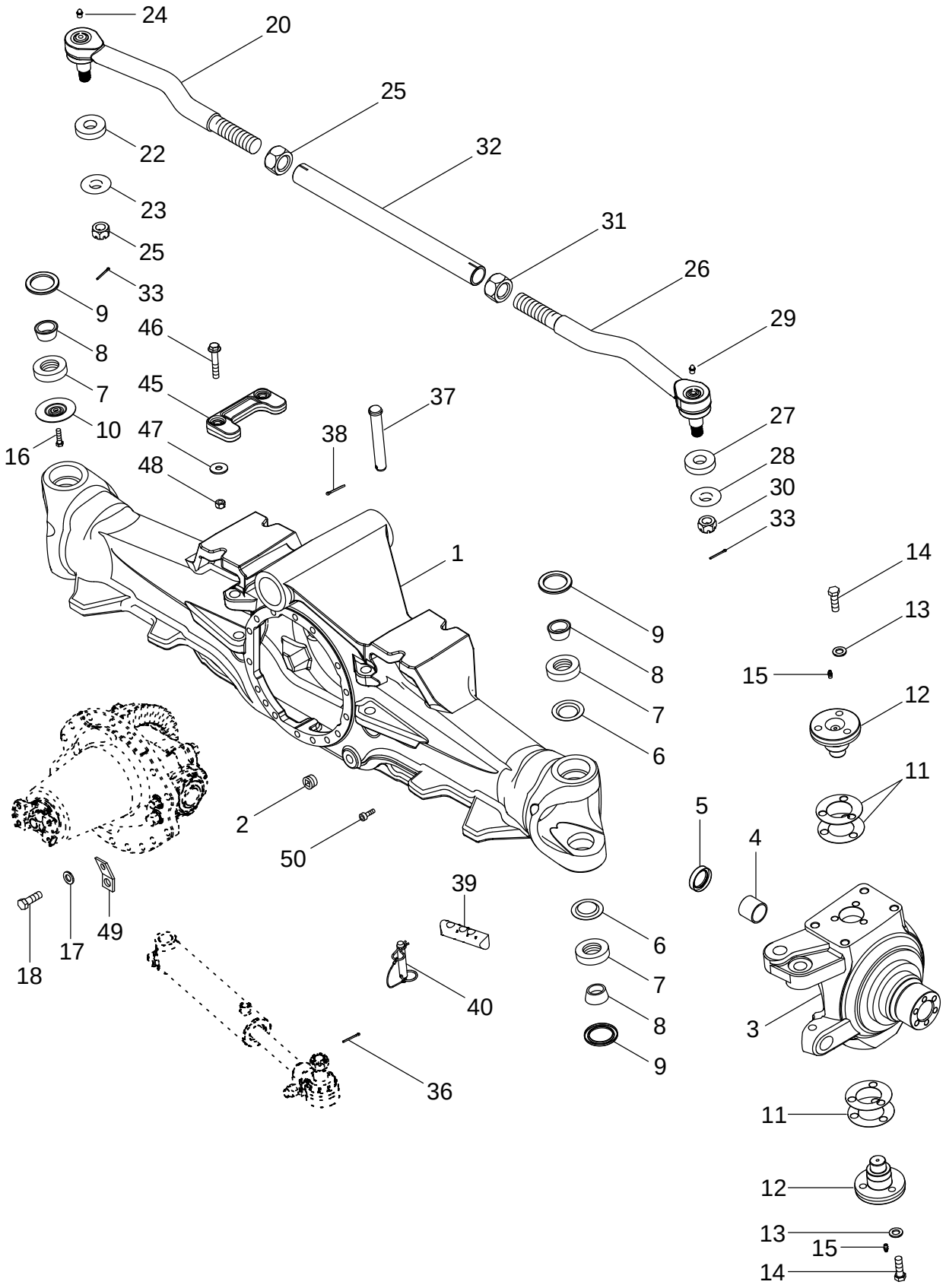

CONJUNTO DEL ALOJAMIENTO DEL EJE DE LA TDM - ESTÁNDAR CON CUBO DE 10 PERNOS
CONJUNTO DA ESTRUTURA DO EIXO DA TMD - STANDARD, COM CUBO DE 10 PARAFUSOS, COM TRANCA DO DIFERENCIAL
MFD-ASBEHUIZING - STANDAARD MET NAAF MET 10 BOUTEN, MET DIFFERENTIEELVERGRENDELING
MFD AKSELHUSSAMLING - STANDARD MED 10 BOLTNAV, MED DIFFERENTIALESPÆRRE

R	N	P.N.	MOD	Q	Description Denominacion	Descrizione Denominação	Description Beschrijving	Bezeichnung Beskrivelse	L.C.
25		302648A1	a	1	NUT 1-3/8, Left Hand Threads				
						DADO	ECROU	MUTTER	010D
					TUERCA	PORCA	MOER	MØTRIK	
25		87455777	b	1	NUT M36, Left Hand Threads				
						DADO	ECROU	MUTTER	010D
					TUERCA	PORCA	MOER	MØTRIK	
26		302645A1	a	1	BALL JOINT Right Hand Threads, Inc. 27 - 30				
						GIUNTO SFERICO	ROTULE	KUGELGELENK	070G
					JUNTA DE ROTULA	JUNTA ESFÉRICA	KOGELGEWRICHT	KUGLELED	
26		87455779	b	1	JOINT ASSY. Right Hand Threads, Inc. 27 - 30				
						UNIVERSALE UNITO ASS	JOINT-CARDAN ASS.	GELENK (KPLT.)	P548
					UNION (CONJUNTO)	UNIAO CONJUNTO	JOINT ASSY.	JOINT ASSY.	
		333617A1	a	1	KIT, GASKET Inc. 27, 28	CONFEZIONE, GUARNIZ	JEU JOINTS ETANCHEIT	DICHTUNGSSATZ	3740
					EMPAQUE DE JUNTAS	JOGO DE JUNTAS	KIT, GASKET	PAKNINGS PAKKE	
		87455780	b	1	KIT Inc. 27, 28	CORREDO	KIT	SATZ	305C
					EQUIPO	KIT	KIT	UDSTYR	
27		NSS		1	NOT SERVICED SEPARATELY Boot				
						NON FORNITO SEPARAT	NON FOURNI SEPAREMI	KEIN ERSATZTEIL	064N
					NO SE REPARA SEPARA	NOT SERVICED SEPARA	NIET ALLEEN VERKRIJG	NOT SERVICED SEPARA	
28		NSS		1	NOT SERVICED SEPARATELY Spacer				
						NON FORNITO SEPARAT	NON FOURNI SEPAREMI	KEIN ERSATZTEIL	064N
					NO SE REPARA SEPARA	NOT SERVICED SEPARA	NIET ALLEEN VERKRIJG	NOT SERVICED SEPARA	
29		219-6	a	1	FITTING Grease 1/4 str	RACCORDO	RACCORD	ANSCHLUSSSTÜCK	3300
					CONEXION	CONEXAO	FITTING	FITTING	
29		87455807	b	1	FITTING Grease	RACCORDO	RACCORD	ANSCHLUSSSTÜCK	3300
					CONEXION	CONEXAO	FITTING	FITTING	
30		429-1314	a	1	SLOTTED NUT 7/8 NF; 8	DADO SCANALATO	ECROU A ENCOCHES	SCHLITZMUTTER	Z477
					TUERCA ENTALLADA	PORCA ENTALHADA	SLOTTED NUT	KÆRVMØTRIK	
30		87455806	b	1	SLOTTED NUT M22	DADO SCANALATO	ECROU A ENCOCHES	SCHLITZMUTTER	Z477
					TUERCA ENTALLADA	PORCA ENTALHADA	SLOTTED NUT	KÆRVMØTRIK	
31		302649A1	a	1	NUT 1-3/8, Right Hand Threads				
						DADO	ECROU	MUTTER	010D
					TUERCA	PORCA	MOER	MØTRIK	
31		87455776	b	1	NUT M36, Right Hand Threads				
						DADO	ECROU	MUTTER	010D
					TUERCA	PORCA	MOER	MØTRIK	
32		302647A1	a	1	TUBE	TUBETTO	TUBE	SCHLAUCH	195T
					TUBO	TUBO	BUISJE	RØR	
32		87455775	b	1	TUBE	TUBETTO	TUBE	SCHLAUCH	195T
					TUBO	TUBO	BUISJE	RØR	
33		432-820		2	PIN, SPLIT (COTTER) 1/8 x 1-1/4				
						COPPIGLIA	GOUPILLE	SPLINT	270C
					PASADOR ABIERTO	TROCO DE ABRIR	SPLITPEN	SPLITBOLT	
36		432-820		2	PIN, SPLIT (COTTER) 1/8 x 1-1/4				
						COPPIGLIA	GOUPILLE	SPLINT	270C
					PASADOR ABIERTO	TROCO DE ABRIR	SPLITPEN	SPLITBOLT	

(a) BSN FUSA6600001
(b) ASN FUSA6600001

05-11		p4	11/04

MFD AXLE HOUSING ASSEMBLY - STANDARD WITH 10 BOLT HUB, WITH DIFFERENTIAL LOCK
GRUPPO DELL'ALLOGGIAMENTO DELL'ASSALE MFD - STANDARD CON MOZZO A 10 BULLONI,
CARTER D'ESSIEU DU PONT AVANT STANDARD AVEC MOYEU À 10 BOULONS, AVEC BLOCAGE DE DIFFÉRENTIEL
ALLRADANTRIEBS-ACHSGEHÄUSE - STANDARD MIT 10 NABENSCHRAUBEN MIT DIFFERENTIALSPERRE

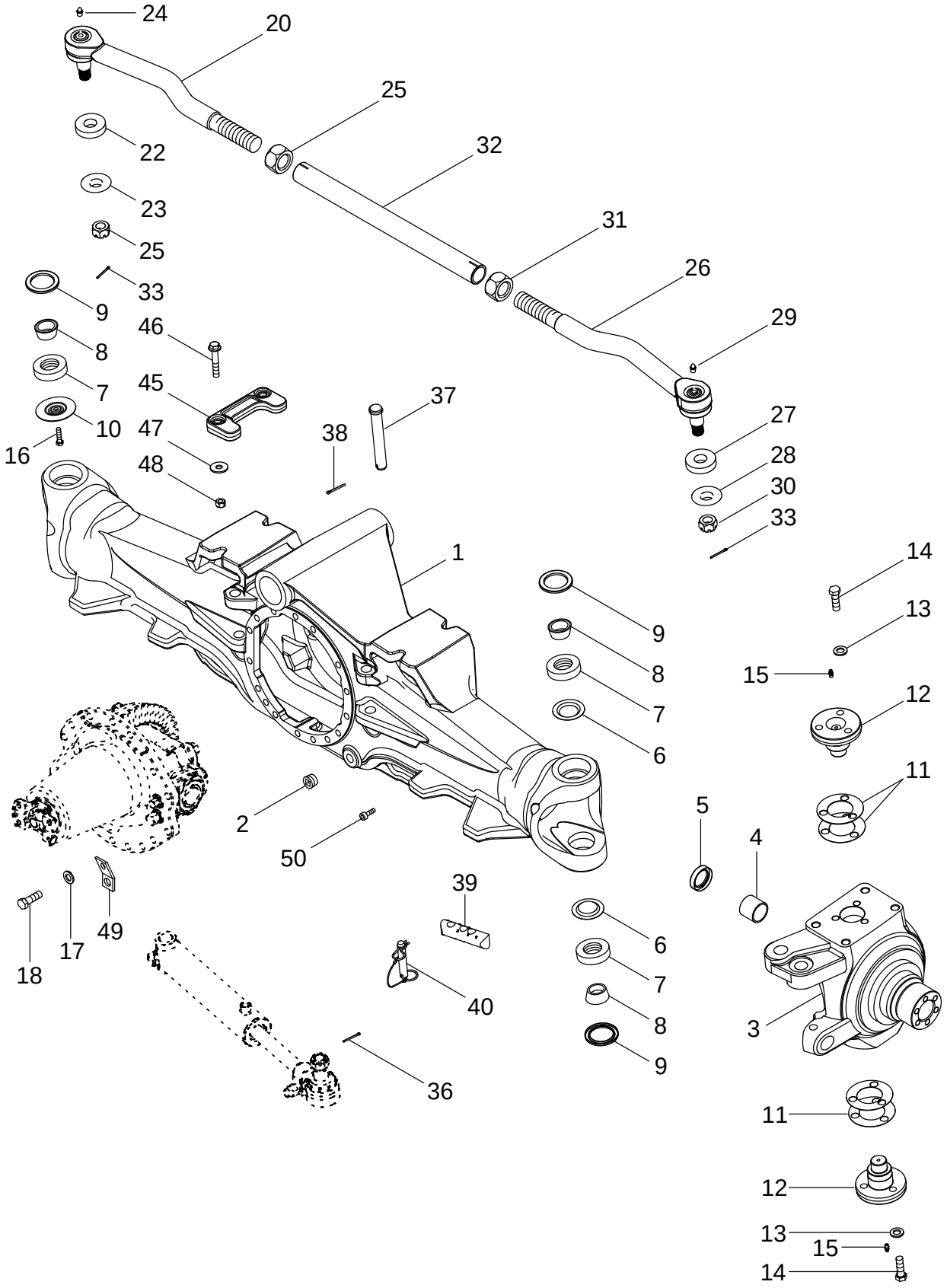

CONJUNTO DEL ALOJAMIENTO DEL EJE DE LA TDM - ESTÁNDAR CON CUBO DE 10 PERNOS
CONJUNTO DA ESTRUTURA DO EIXO DA TMD - STANDARD, COM CUBO DE 10 PARAFUSOS, COM TRANCA DO DIFERENCIAL
MFD-ASBEHUIZING - STANDAARD MET NAAF MET 10 BOUTEN, MET DIFFERENTIEELVERGRENDELING
MFD AKSELHUSSAMLING - STANDARD MED 10 BOLTNAV, MED DIFFERENTIALESPÆRRE

R	N	P.N.	MOD	Q	Description Denominacion	Descrizione Denominação	Description Beschrijving	Bezeichnung Beskrivelse	L.C.
37		292565A1		2	PIN, LARGE BULON/PIN, LARGO	SPINA, GRANDE PINO LARGO	AXE, GROS PIN, LARGE	BOLZEN, GROSS STOR PIND	Z009
38		733-4032		2	PIN, SPLIT (COTTER) 4 x 32 mm PASADOR ABIERTO	COPPIGLIA TROCO DE ABRIR	GOUPILLE SPLITPEN	SPLINT SPLITBOLT	270C
39		281914A1		2	ROD Steering Stop, Short, 3 Hole (Shown) VARILLA	ASTA HASTE	TRINGLE STANG	STANGE STANG	090A
39		451995A1		2	ROD, ADJUSTMENT Steering Stop, Long, 4 Hole (Not Shown) VARILLA DE REGLAJE	ASTA DI REGOLAZIONE TIRANTE DE AFINACAO	TRINGLE DE RÉGLAGE REGELBARE STANG	EINSTELLSTANGE JUSTERSTANG	088A
40		87404993		2	PIN, AXLE PIVOTE DE EJE	PERNO DELL'ASSALE PIVOTE DE EJE	PIVOT D'ESSIEU PIN, AXLE	ACHSBOLZEN AKSELPIND	Z160
45		297333A2		2	BLOCK ASSY. BLOQUE (CONJUNTO)	BOZZELLO, COMPL. BLOCO CONJUNTO	BLOC (ASSEMBLE) BLOCK ASSY.	BLOCK (KPLT.) BLOCK ASSY.	P503
46		844-12070		4	SCREW M12 x 70; 8.8 TORNILLO	VITE PARAFUSO	VIS SCHROEF	SCHRAUBE SKRUE	7450
47		495-21069		4	WASHER 11/16 x 1-3/4 x 9/64 ARANDELA	ROSETTA PIANA ANILHA	RONDELLE SLUITRING	SCHEIBE FLADSKIVE	9720
48		829-1412		4	NUT M12; 10 TUERCA	DADO PORCA	ECROU MOER	MUTTER MØTRIK	5780
49		352782A1		1	STRAP BANDA	BANDELLA BANDA	SANGLE RIEM	GURT STROP	532B
50		863-8020		2	SCREW M8 x 20; 12.9 TORNILLO	VITE PARAFUSO	VIS SCHROEF	SCHRAUBE SKRUE	7450

05-12		p1	11/04

MFD AXLE HOUSING ASSEMBLY - STANDARD WITH 12 BOLT HUB, WITH DIFFERENTIAL LOCK
GRUPPO DELL'ALLOGGIAMENTO DELL'ASSALE MFD - STANDARD CON MOZZO A 12 BULLONI
CARTER D'ESSIEU DU PONT AVANT STANDARD AVEC MOYEU À 12 BOULONS, AVEC BLOCAGE DE DIFFÉRENTIEL
ALLRADANTRIEBS-ACHSGEHÄUSE - STANDARD MIT 12 NABENSCHRAUBEN MIT DIFFERENTIALSPERRE

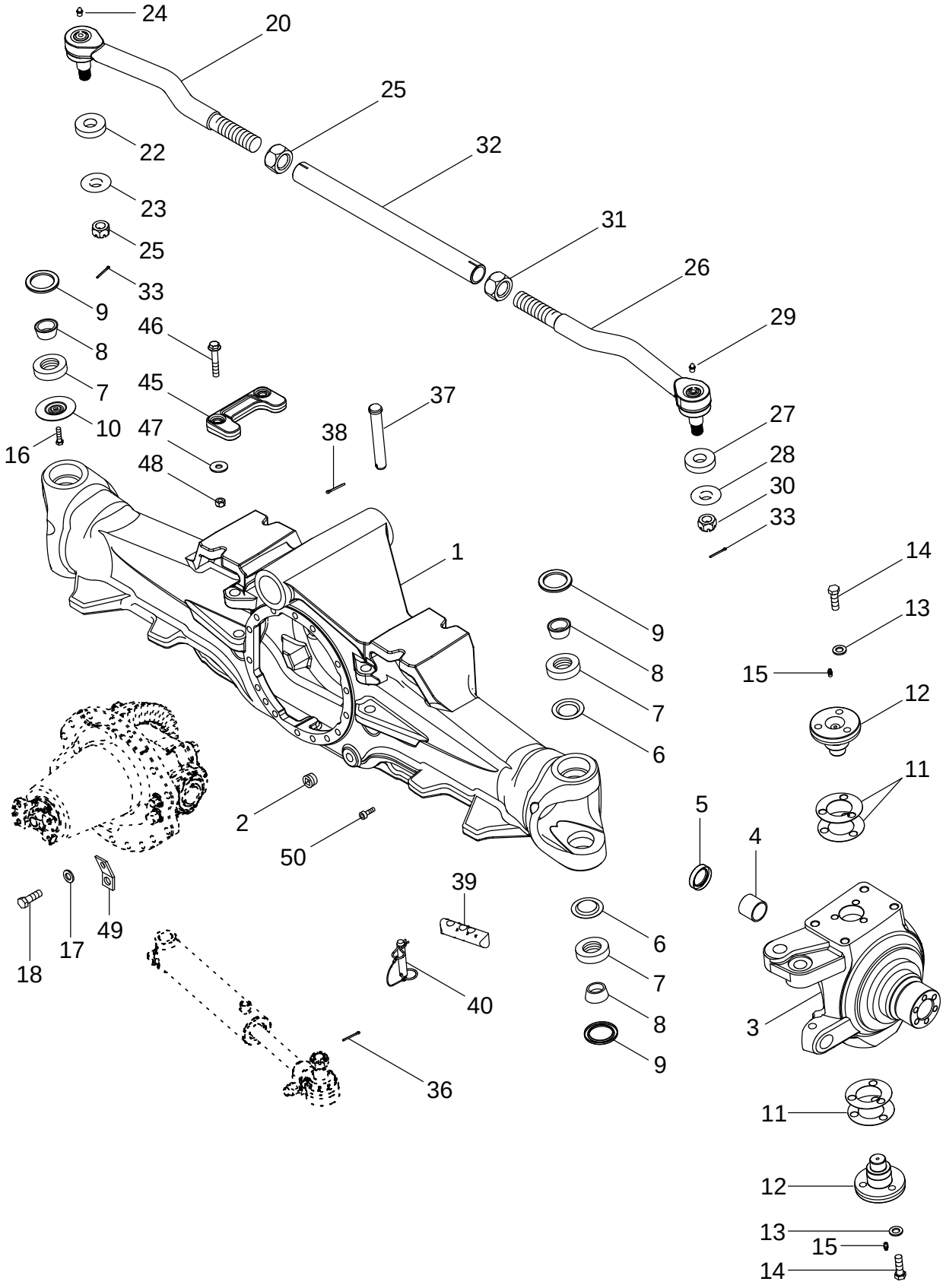

CONJUNTO DEL ALOJAMIENTO DEL EJE DE LA TDM - ESTÁNDAR CON CUBO DE 12 PERNOS, CON BLOQUEO DEL DIFEREN
CONJUNTO DA ESTRUTURA DO EIXO DA TMD - STANDARD, COM CUBO DE 12 PARAFUSOS, COM TRANCA DO DIFERENCIAL
MFD-ASBEHUIZING - STANDAARD MET NAAF MET 12 BOUTEN, MET DIFFERENTIEELVERGRENDELING
MFD AKSELHUSSAMLING - STANDARD MED 12 BOLTNAV, MED DIFFERENTIALESPÆRRE

R	N	P.N.	MOD	Q	Description Denominacion	Descrizione Denominação	Description Beschrijving	Bezeichnung Beskrivelse	L.C.
		407312A6		1	AXLE ASSY, 4WD Complete With Differential And Planetaries				
						ASSALE, COMPLESSIVO	PONT AVANT	ACHSE KOMP. ALLRAD	P569
					EJE (CONJUNTO)	EIXO CONJUNTO 4WD	AXLE ASSY, 4WD	AXLE ASSY, 4WD	
1		87404249		1	HOUSING	ALLOGGIAMENTO	CARTER	GEHÄUSE	014V
					CAVIDAD	ALOJAMENTO	HUIS	HUS	
2		221-887		2	PLUG 3/4	TAPPO	BOUCHON	STOPFEN	6400
					TAPÓN	BUJAO	PLUG	PROP	
3		292564A2		1	KNUCKLE, STEERING Right Hand				
						ARTICOLAZIONE	FUSEE	ACHSSCHENKEL	4880
					CHARNELA	ARTICULACAO DIRECAC	KNUCKLE, STEERING	KNUCKLE, STEERING	
3		292560A2		1	KNUCKLE, STEERING Left Hand				
						ARTICOLAZIONE	FUSEE	ACHSSCHENKEL	4880
					CHARNELA	ARTICULACAO DIRECAC	KNUCKLE, STEERING	KNUCKLE, STEERING	
4		235628A1		1	BUSHING	BOCCOLA	BAGUE	BUECHSE	095B
					CASQUILLO	CASQUILHO	LAGERBUS	BOESNING	
5		128647A1		1	SEAL	ANELLO DI TENUTA	JOINT	DICHTUNG	132A
					ANILLO DE CIERRE	ANEL DE VEDACAO	DICHTINGSRING	PAKNINGSRING	
6		281937A1		3	RETAINER	RITEGNO	RETENEUR	HALTEVORRICHTUNG	109R
					RETENEDOR	RETENTOR	HOUDER	HOLDER	
		368728A1		4	BEARING Inc. 7, 8	CUSCINETTO	ROULEMENT	LAGER	0600
					COJINETE	ROLAMENTO	BEARING	BEARING	
7		NSS		1	NOT SERVICED SEPARATELY Ring, Inner				
						NON FORNITO SEPARAT	NON FOURNI SEPAREMI	KEIN ERSATZTEIL	064N
					NO SE REPARA SEPARA	NOT SERVICED SEPARA	NIET ALLEEN VERKRIJG	NOT SERVICED SEPARA	
8		NSS		1	NOT SERVICED SEPARATELY Ring, Outer				
						NON FORNITO SEPARAT	NON FOURNI SEPAREMI	KEIN ERSATZTEIL	064N
					NO SE REPARA SEPARA	NOT SERVICED SEPARA	NIET ALLEEN VERKRIJG	NOT SERVICED SEPARA	
9		281939A1		4	SEAL	ANELLO DI TENUTA	JOINT	DICHTUNG	132A
					ANILLO DE CIERRE	ANEL DE VEDACAO	DICHTINGSRING	PAKNINGSRING	
10		281937A1		1	RETAINER If Equipped (Not Shown)				
						RITEGNO	RETENEUR	HALTEVORRICHTUNG	109R
					RETENEDOR	RETENTOR	HOUDER	HOLDER	
10		87440529		1	RETAINER If Equipped (Shown)				
						RITEGNO	RETENEUR	HALTEVORRICHTUNG	109R
					RETENEDOR	RETENTOR	HOUDER	HOLDER	
		313557A1		1	KIT, SHIM Inc. 11	KIT SPESSORE	JEU DE CALES	EINSTELLSCHEIBEN, SC	P688
					JUEGO DE CALCES	JUEGO DE CALCES	PACKAGE, SHIMS	KIT, AFSTANDSSTYKKE	
11		NSS		5	NOT SERVICED SEPARATELY Shim				
						NON FORNITO SEPARAT	NON FOURNI SEPAREMI	KEIN ERSATZTEIL	064N
					NO SE REPARA SEPARA	NOT SERVICED SEPARA	NIET ALLEEN VERKRIJG	NOT SERVICED SEPARA	
11		NSS		5	NOT SERVICED SEPARATELY Shim				
						NON FORNITO SEPARAT	NON FOURNI SEPAREMI	KEIN ERSATZTEIL	064N
					NO SE REPARA SEPARA	NOT SERVICED SEPARA	NIET ALLEEN VERKRIJG	NOT SERVICED SEPARA	
11		NSS		5	NOT SERVICED SEPARATELY Shim				
						NON FORNITO SEPARAT	NON FOURNI SEPAREMI	KEIN ERSATZTEIL	064N
					NO SE REPARA SEPARA	NOT SERVICED SEPARA	NIET ALLEEN VERKRIJG	NOT SERVICED SEPARA	
11		NSS		5	NOT SERVICED SEPARATELY Shim				
						NON FORNITO SEPARAT	NON FOURNI SEPAREMI	KEIN ERSATZTEIL	064N
					NO SE REPARA SEPARA	NOT SERVICED SEPARA	NIET ALLEEN VERKRIJG	NOT SERVICED SEPARA	

05-12		p2	11/04

MFD AXLE HOUSING ASSEMBLY - STANDARD WITH 12 BOLT HUB, WITH DIFFERENTIAL LOCK
GRUPPO DELL'ALLOGGIAMENTO DELL'ASSALE MFD - STANDARD CON MOZZO A 12 BULLONI
CARTER D'ESSIEU DU PONT AVANT STANDARD AVEC MOYEU À 12 BOULONS, AVEC BLOCAGE DE DIFFÉRENTIEL
ALLRADANTRIEBS-ACHSGEHÄUSE - STANDARD MIT 12 NABENSCHRAUBEN MIT DIFFERENTIALSPERRE

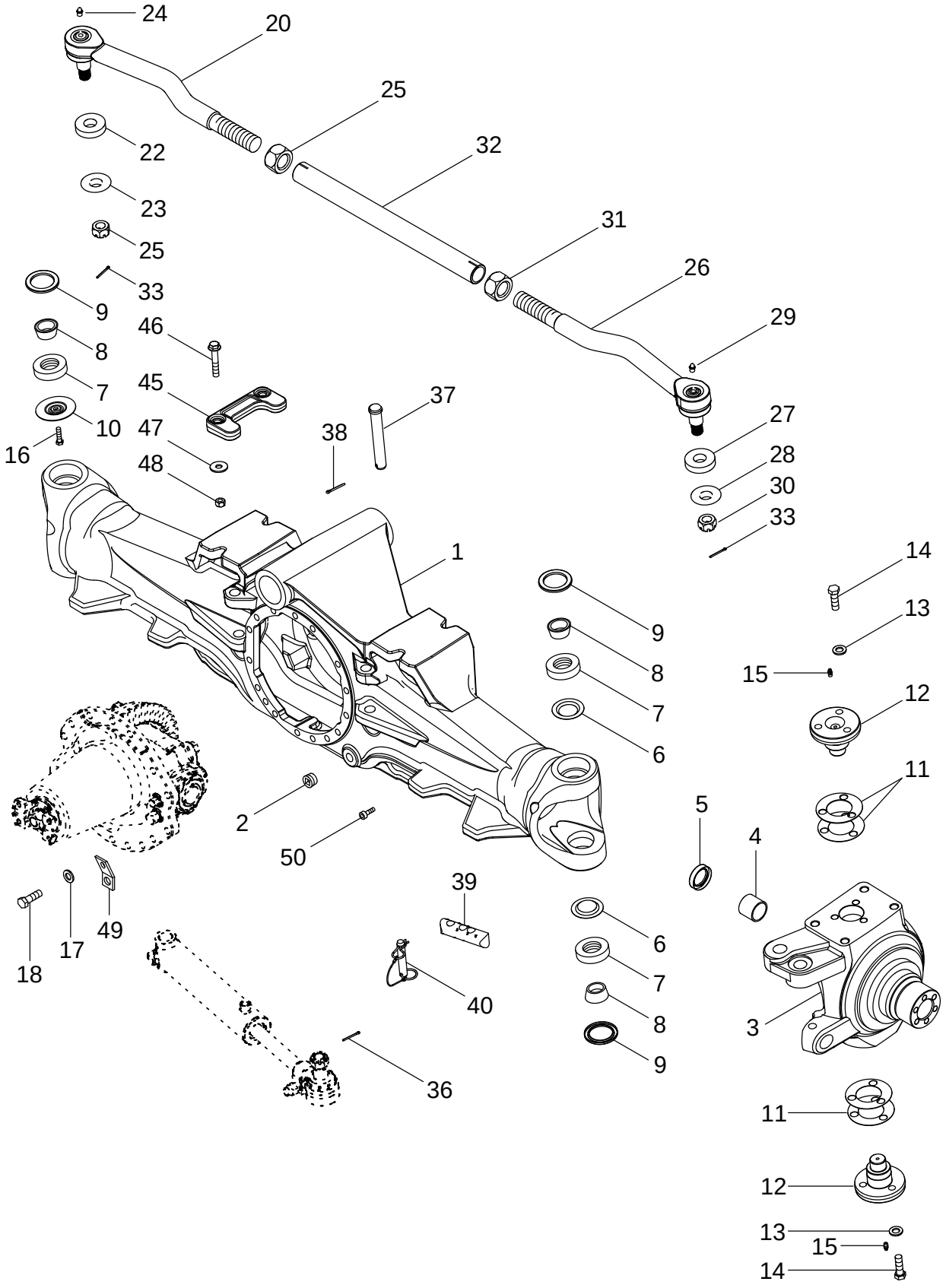

CONJUNTO DEL ALOJAMIENTO DEL EJE DE LA TDM - ESTÁNDAR CON CUBO DE 12 PERNOS, CON BLOQUEO DEL DIFEREN
CONJUNTO DA ESTRUTURA DO EIXO DA TMD - STANDARD, COM CUBO DE 12 PARAFUSOS, COM TRANCA DO DIFERENCIAL
MFD-ASBEHUIZING - STANDAARD MET NAAF MET 12 BOUTEN, MET DIFFERENTIEELVERGRENDELING
MFD AKSELHUSSAMLING - STANDARD MED 12 BOLTNAV, MED DIFFERENTIALESPÆRRE

R	N	P.N.	MOD	Q	Description Denominacion	Descrizione Denominação	Description Beschrijving	Bezeichnung Beskrivelse	L.C.
11		NSS		5	NOT SERVICED SEPARATELY Shim				
						NON FORNITO SEPARAT	NON FOURNI SEPAREMI	KEIN ERSATZTEIL	064N
					NO SE REPARA SEPARA	NOT SERVICED SEPARA	NIET ALLEEN VERKRIJG	NOT SERVICED SEPARA	
11		NSS		5	NOT SERVICED SEPARATELY Shim				
						NON FORNITO SEPARAT	NON FOURNI SEPAREMI	KEIN ERSATZTEIL	064N
					NO SE REPARA SEPARA	NOT SERVICED SEPARA	NIET ALLEEN VERKRIJG	NOT SERVICED SEPARA	
12		378410A1		4	CAP	TAPPO SERBATOIO	CHAPEAU	KAPPE	052T
					TAPON DEL DEPOSITO	TAMPAO DE RESERVAT	RESERVOIRDOP	TANKDAEKSEL	
13		896-11014		12	WASHER 15,5 x 28 x 3 mm	ROSETTA PIANA	RONDELLE	SCHEIBE	9720
					ARANDELA	ANILHA	SLUITRING	FLADSKIVE	
14		627-14045		12	SCREW M14 x 45; 10,9	VITE	VIS	SCHRAUBE	7450
					TORNILLO	PARAFUSO	SCHROEF	SKRUE	
15		219-1		4	NIPPLE, LUBE 1/8 PT x 21/32				
						INGRASSATORE	GRAISSEUR	SCHMIERNIPPEL	060I
					ENGRASADOR	LUBRIFICADOR	SMEERNIPPEL	SMØRENIPPEL	
16		86977726		1	SCREW M6 x 12; 8.8, If Equipped				
						VITE	VIS	SCHRAUBE	040V
					TORNILLO	PARAFUSO	SCHROEF	SKRUE	
17		896-11014		16	WASHER 15,5 x 28 x 3 mm	ROSETTA PIANA	RONDELLE	SCHEIBE	9720
					ARANDELA	ANILHA	SLUITRING	FLADSKIVE	
18		627-14045		16	SCREW M14 x 45; 10,9	VITE	VIS	SCHRAUBE	7450
					TORNILLO	PARAFUSO	SCHROEF	SKRUE	
20		311169A2	a	1	BALL JOINT Left Hand Threads, Inc. 21 - 24				
						GIUNTO SFERICO	ROTULE	KUGELGELENK	070G
					JUNTA DE ROTULA	JUNTA ESFÉRICA	KOGELGEWRICHT	KUGLELED	
20		87455742	b	1	BALL JOINT Left Hand Threads, Inc. 21 - 24				
						GIUNTO SFERICO	ROTULE	KUGELGELENK	070G
					JUNTA DE ROTULA	JUNTA ESFÉRICA	KOGELGEWRICHT	KUGLELED	
		333617A1	a	1	KIT, GASKET Inc. 21, 22	CONFEZIONE, GUARNIZ	JEU JOINTS ETANCHEIT	DICHTUNGSSATZ	3740
					EMPAQUE DE JUNTAS	JOGO DE JUNTAS	KIT, GASKET	PAKNINGS PAKKE	
		87455748	b	1	KIT Inc. 21, 22	CORREDO	KIT	SATZ	305C
					EQUIPO	KIT	KIT	UDSTYR	
21		NSS		1	NOT SERVICED SEPARATELY Boot				
						NON FORNITO SEPARAT	NON FOURNI SEPAREMI	KEIN ERSATZTEIL	064N
					NO SE REPARA SEPARA	NOT SERVICED SEPARA	NIET ALLEEN VERKRIJG	NOT SERVICED SEPARA	
22		NSS		1	NOT SERVICED SEPARATELY Spacer				
						NON FORNITO SEPARAT	NON FOURNI SEPAREMI	KEIN ERSATZTEIL	064N
					NO SE REPARA SEPARA	NOT SERVICED SEPARA	NIET ALLEEN VERKRIJG	NOT SERVICED SEPARA	
23		429-1314	a	1	SLOTTED NUT 7/8 NF; 8	DADO SCANALATO	ECROU A ENCOCHES	SCHLITZMUTTER	Z477
					TUERCA ENTALLADA	PORCA ENTALHADA	SLOTTED NUT	KÆRVMØTRIK	
23		87455806	b	1	SLOTTED NUT M22	DADO SCANALATO	ECROU A ENCOCHES	SCHLITZMUTTER	Z477
					TUERCA ENTALLADA	PORCA ENTALHADA	SLOTTED NUT	KÆRVMØTRIK	
24		219-6	a	1	FITTING Grease 1/4 str	RACCORDO	RACCORD	ANSCHLUSSSTÜCK	3300
					CONEXION	CONEXAO	FITTING	FITTING	
24		87455807	b	1	FITTING Grease	RACCORDO	RACCORD	ANSCHLUSSSTÜCK	3300
					CONEXION	CONEXAO	FITTING	FITTING	

(a) BSN FUSA6500006
(b) ASN FUSA6500006

MFD AXLE HOUSING ASSEMBLY - STANDARD WITH 12 BOLT HUB, WITH DIFFERENTIAL LOCK
GRUPPO DELL'ALLOGGIAMENTO DELL'ASSALE MFD - STANDARD CON MOZZO A 12 BULLONI
CARTER D'ESSIEU DU PONT AVANT STANDARD AVEC MOYEU À 12 BOULONS, AVEC BLOCAGE DE DIFFÉRENTIEL
ALLRADANTRIEBS-ACHSGEHÄUSE - STANDARD MIT 12 NABENSCHRAUBEN MIT DIFFERENTIALSPERRE

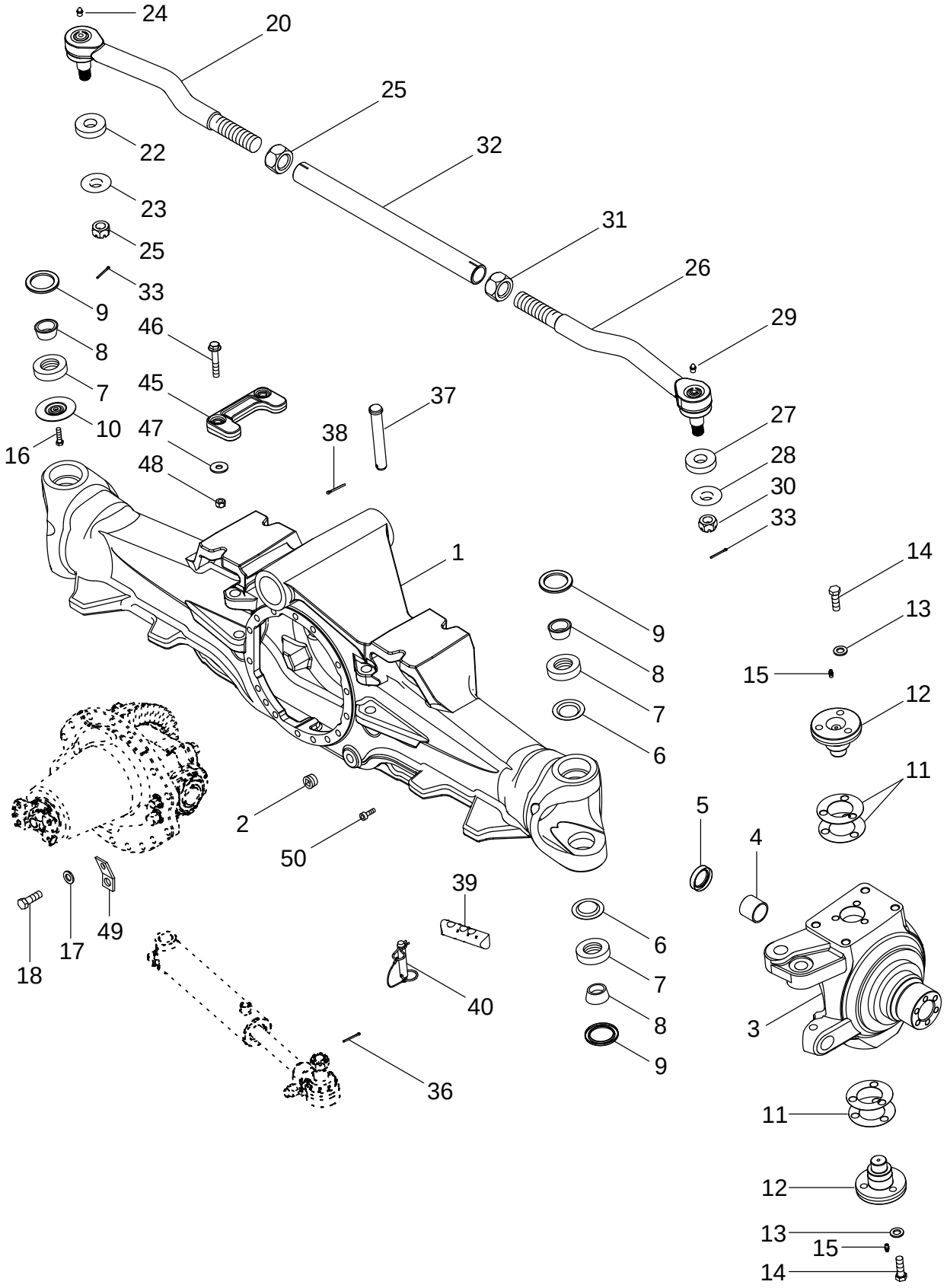

CONJUNTO DEL ALOJAMIENTO DEL EJE DE LA TDM - ESTÁNDAR CON CUBO DE 12 PERNOS, CON BLOQUEO DEL DIFEREN
CONJUNTO DA ESTRUTURA DO EIXO DA TMD - STANDARD, COM CUBO DE 12 PARAFUSOS, COM TRANCA DO DIFERENCIAL
MFD-ASBEHUIZING - STANDAARD MET NAAF MET 12 BOUTEN, MET DIFFERENTIEELVERGRENDELING
MFD AKSELHUSSAMLING - STANDARD MED 12 BOLTNAV, MED DIFFERENTIALESPÆRRE

R	N	P.N.	MOD	Q	Description Denominacion	Descrizione Denominação	Description Beschrijving	Bezeichnung Beskrivelse	L.C.
25		311168A1	a	1	NUT 1-1/2, Left Hand Threads				
						DADO	ECROU	MUTTER	010D
					TUERCA	PORCA	MOER	MØTRIK	
25		87455741	b	1	NUT M38, Left Hand Threads				
						DADO	ECROU	MUTTER	010D
					TUERCA	PORCA	MOER	MØTRIK	
26		311170A2	a	1	BALL JOINT Right Hand Threads, Inc. 27 - 30				
						GIUNTO SFERICO	ROTULE	KUGELGELENK	070G
					JUNTA DE ROTULA	JUNTA ESFÉRICA	KOGELGEWRICHT	KUGLELED	
26		87455743	b	1	BALL JOINT Right Hand Threads, Inc. 27 - 30				
						GIUNTO SFERICO	ROTULE	KUGELGELENK	070G
					JUNTA DE ROTULA	JUNTA ESFÉRICA	KOGELGEWRICHT	KUGLELED	
		333617A1	a	1	KIT, GASKET Inc. 27, 28	CONFEZIONE, GUARNIZ	JEU JOINTS ETANCHEIT	DICHTUNGSSATZ	3740
					EMPAQUE DE JUNTAS	JOGO DE JUNTAS	KIT, GASKET	PAKNINGS PAKKE	
		87455748	b	1	KIT Inc. 27, 28	CORREDO	KIT	SATZ	305C
					EQUIPO	KIT	KIT	UDSTYR	
27		NSS		1	NOT SERVICED SEPARATELY Boot				
						NON FORNITO SEPARAT	NON FOURNI SEPAREMI	KEIN ERSATZTEIL	064N
					NO SE REPARA SEPARA	NOT SERVICED SEPARA	NIET ALLEEN VERKRIJG	NOT SERVICED SEPARA	
28		NSS		1	NOT SERVICED SEPARATELY Spacer				
						NON FORNITO SEPARAT	NON FOURNI SEPAREMI	KEIN ERSATZTEIL	064N
					NO SE REPARA SEPARA	NOT SERVICED SEPARA	NIET ALLEEN VERKRIJG	NOT SERVICED SEPARA	
29		219-6	a	1	FITTING Grease 1/4 str	RACCORDO	RACCORD	ANSCHLUSSSTÜCK	3300
					CONEXION	CONEXAO	FITTING	FITTING	
29		87455807	b	1	FITTING Grease	RACCORDO	RACCORD	ANSCHLUSSSTÜCK	3300
					CONEXION	CONEXAO	FITTING	FITTING	
30		429-1314	a	1	SLOTTED NUT 7/8 NF; 8	DADO SCANALATO	ECROU A ENCOCHES	SCHLITZMUTTER	Z477
					TUERCA ENTALLADA	PORCA ENTALHADA	SLOTTED NUT	KÆRVMØTRIK	
30		87455806	b	1	SLOTTED NUT M22	DADO SCANALATO	ECROU A ENCOCHES	SCHLITZMUTTER	Z477
					TUERCA ENTALLADA	PORCA ENTALHADA	SLOTTED NUT	KÆRVMØTRIK	
31		311167A1	a	1	NUT 1-1/2, Right Hand Threads				
						DADO	ECROU	MUTTER	010D
					TUERCA	PORCA	MOER	MØTRIK	
31		87455739	b	1	NUT M38, Right Hand Threads				
						DADO	ECROU	MUTTER	010D
					TUERCA	PORCA	MOER	MØTRIK	
32		311166A1	a	1	TUBE	TUBETTO	TUBE	SCHLAUCH	195T
					TUBO	TUBO	BUISJE	RØR	
32		87455737	b	1	TUBE	TUBETTO	TUBE	SCHLAUCH	195T
					TUBO	TUBO	BUISJE	RØR	
33		432-820		2	PIN, SPLIT (COTTER) 1/8 x 1-1/4				
						COPPIGLIA	GOUPILLE	SPLINT	270C
					PASADOR ABIERTO	TROCO DE ABRIR	SPLITPEN	SPLITBOLT	
36		432-820		2	PIN, SPLIT (COTTER) 1/8 x 1-1/4				
						COPPIGLIA	GOUPILLE	SPLINT	270C
					PASADOR ABIERTO	TROCO DE ABRIR	SPLITPEN	SPLITBOLT	

(a) BSN FUSA6500006
(b) ASN FUSA6500006

MFD AXLE HOUSING ASSEMBLY - STANDARD WITH 12 BOLT HUB, WITH DIFFERENTIAL LOCK
GRUPPO DELL'ALLOGGIAMENTO DELL'ASSALE MFD - STANDARD CON MOZZO A 12 BULLONI
CARTER D'ESSIEU DU PONT AVANT STANDARD AVEC MOYEU À 12 BOULONS, AVEC BLOCAGE DE DIFFÉRENTIEL
ALLRADANTRIEBS-ACHSGEHÄUSE - STANDARD MIT 12 NABENSCHRAUBEN MIT DIFFERENTIALSPERRE

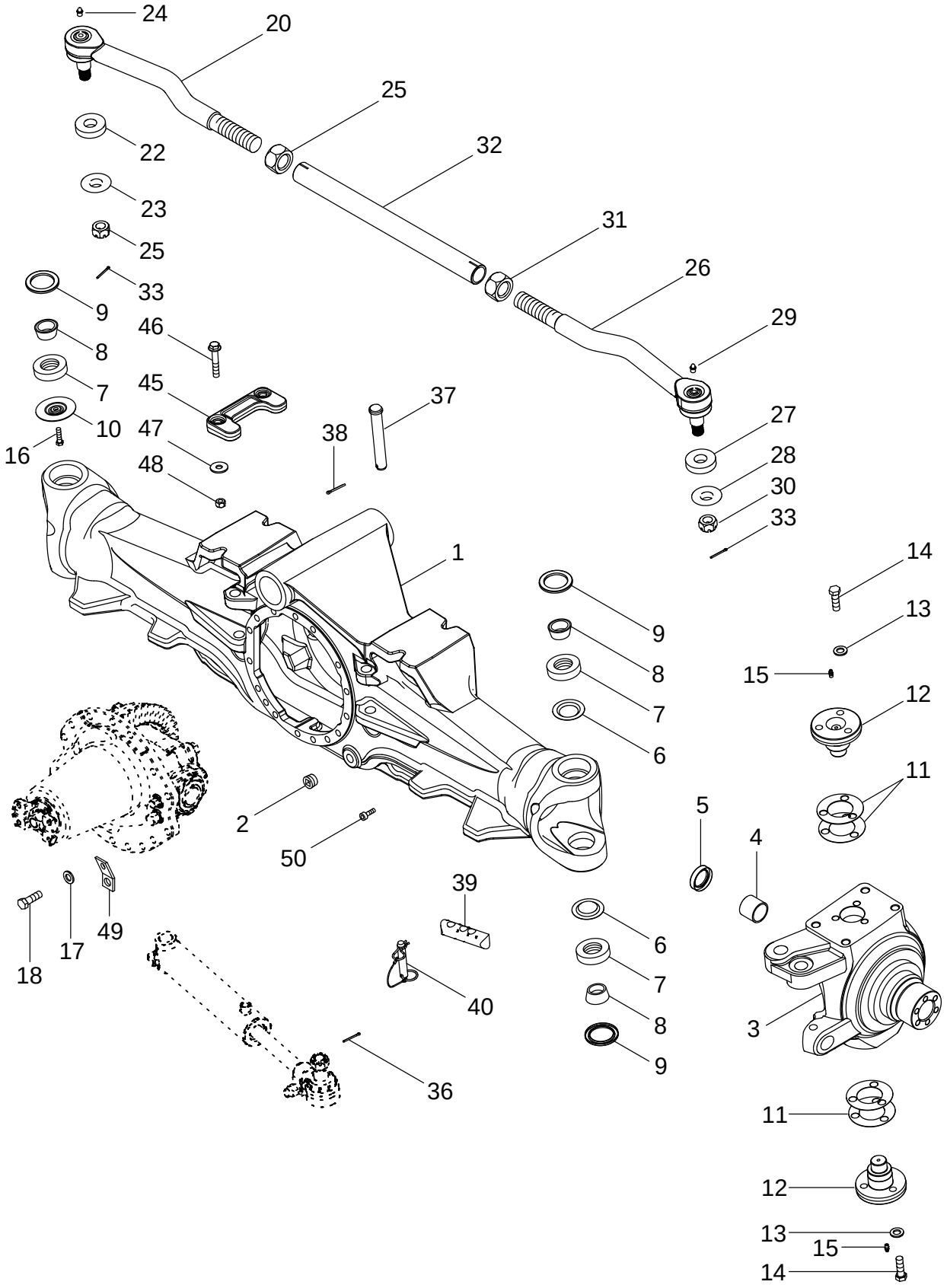

CONJUNTO DEL ALOJAMIENTO DEL EJE DE LA TDM - ESTÁNDAR CON CUBO DE 12 PERNOS, CON BLOQUEO DEL DIFEREN
CONJUNTO DA ESTRUTURA DO EIXO DA TMD - STANDARD, COM CUBO DE 12 PARAFUSOS, COM TRANCA DO DIFERENCIAL
MFD-ASBEHUIZING - STANDAARD MET NAAF MET 12 BOUTEN, MET DIFFERENTIEELVERGRENDELING
MFD AKSELHUSSAMLING - STANDARD MED 12 BOLTNAV, MED DIFFERENTIALESPÆRRE

R	N	P.N.	MOD	Q	Description Denominacion	Descrizione Denominação	Description Beschrijving	Bezeichnung Beskrivelse	L.C.
37		292565A1		2	PIN, LARGE BULON/PIN, LARGO	SPINA, GRANDE PINO LARGO	AXE, GROS PIN, LARGE	BOLZEN, GROSS STOR PIND	Z009
38		733-4032		2	PIN, SPLIT (COTTER) 4 x 32 mm PASADOR ABIERTO	COPPIGLIA TROCO DE ABRIR	GOUPILLE SPLITPEN	SPLINT SPLITBOLT	270C
39		281914A1		2	ROD Steering Stop, Short, 3 Hole (Shown) VARILLA	ASTA HASTE	TRINGLE STANG	STANGE STANG	090A
39		451995A1		2	ROD, ADJUSTMENT Steering Stop, Long, 4 Hole (Not Shown) VARILLA DE REGLAJE	ASTA DI REGOLAZIONE TIRANTE DE AFINACAO	TRINGLE DE RÉGLAGE REGELBARE STANG	EINSTELLSTANGE JUSTERSTANG	088A
40		87404993		2	PIN, AXLE PIVOTE DE EJE	PERNO DELL'ASSALE PIVOTE DE EJE	PIVOT D'ESSIEU PIN, AXLE	ACHSBOLZEN AKSELPIND	Z160
45		297333A2		2	BLOCK ASSY. BLOQUE (CONJUNTO)	BOZZELLO, COMPL. BLOCO CONJUNTO	BLOC (ASSEMBLE) BLOCK ASSY.	BLOCK (KPLT.) BLOCK ASSY.	P503
46		844-12070		4	SCREW M12 x 70; 8.8 TORNILLO	VITE PARAFUSO	VIS SCHROEF	SCHRAUBE SKRUE	7450
47		495-21069		4	WASHER 11/16 x 1-3/4 x 9/64 ARANDELA	ROSETTA PIANA ANILHA	RONDELLE SLUITRING	SCHEIBE FLADSKIVE	9720
48		829-1412		4	NUT M12; 10 TUERCA	DADO PORCA	ECROU MOER	MUTTER MØTRIK	5780
49		352782A1		1	STRAP BANDA	BANDELLA BANDA	SANGLE RIEM	GURT STROP	532B
50		863-8020		2	SCREW M8 x 20; 12.9 TORNILLO	VITE PARAFUSO	VIS SCHROEF	SCHRAUBE SKRUE	7450

05-13		p1	11/04

MFD AXLE HOUSING ASSEMBLY - SUSPENDED WITH 10 BOLT HUB, WITHOUT DIFFERENTIAL LOCK
GRUPPO DELL'ALLOGGIAMENTO DELL'ASSALE MFD - SOSPESO CON MOZZO A 10 BULLONI
CARTER D'ESSIEU DU PONT AVANT SUSPENDU AVEC MOYEU À 10 BOULONS, SANS BLOCAGE DE DIFFÉRENTIEL
ALLRADANTRIEBS-ACHSGEHÄUSE - GEFEDERT MIT 10 NABENSCHRAUBEN OHNE DIFFERENTIALSPERRE

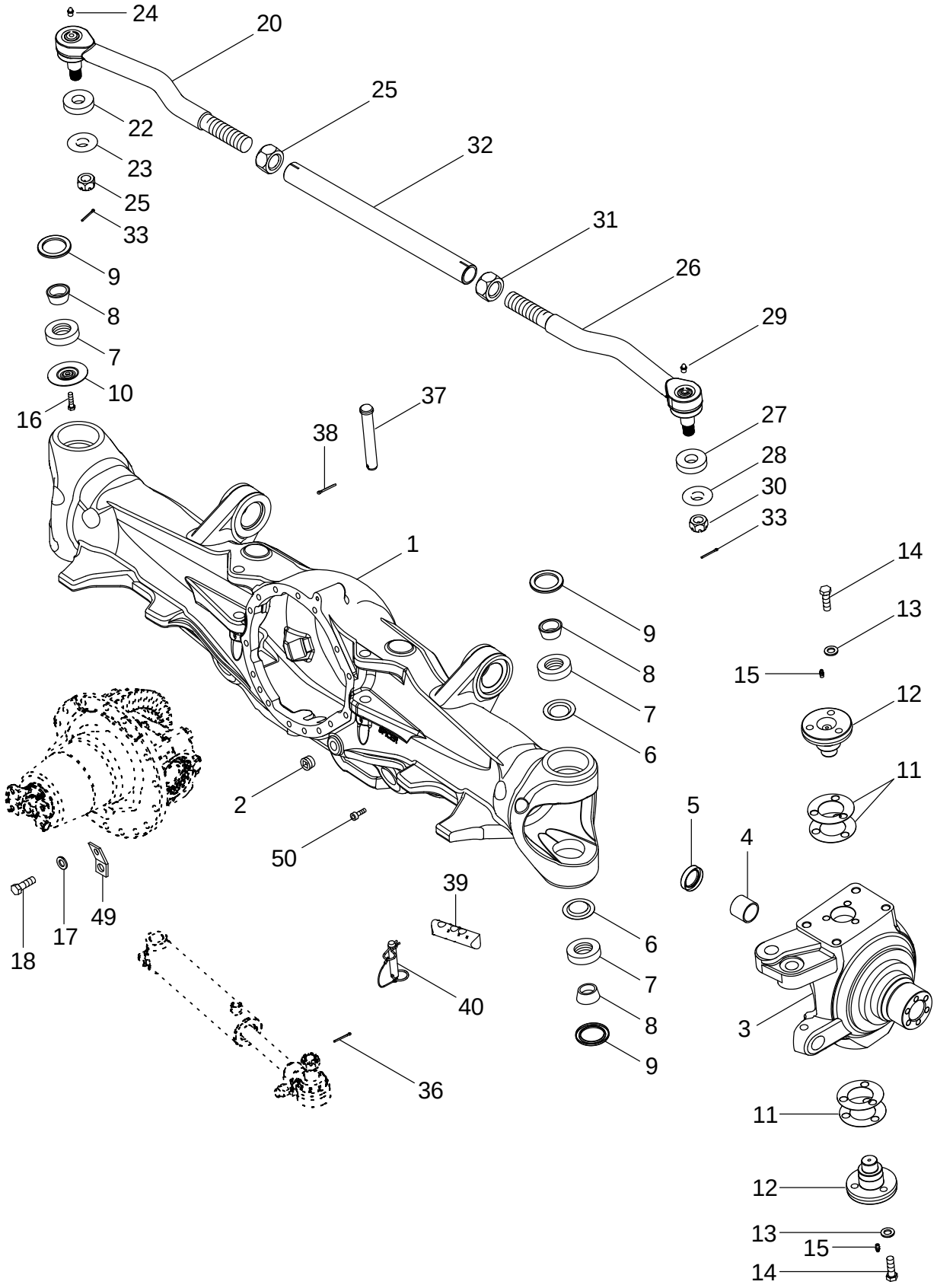

CONJUNTO DEL ALOJAMIENTO DEL EJE DE LA TDM - SUSPENDIDO CON CUBO DE 10 PERNOS
CONJUNTO DA ESTRUTURA DO EIXO DA TMD - SUSPENSO, COM CUBO DE 10 PARAFUSOS, SEM TRANCA DO DIFERENCIAL
MFD-ASBEHUIZING - BEWEEGBAAR OPGEHANGEN MET NAAF MET 10 BOUTEN , ZONDER DIFFERENTIEELVERGRENDELING
MFD AKSELHUSSAMLING - OPHÆNGT MED 10 BOLTNAV, UDEN DIFFERENTIALESPÆRRE

R	N	P.N.	MOD	Q	Description Denominacion	Descrizione Denominação	Description Beschrijving	Bezeichnung Beskrivelse	L.C.
		396441A6		1	AXLE ASSY, 4WD Complete With Differential And Planetaries				
						ASSALE, COMPLESSIVO	PONT AVANT	ACHSE KOMP. ALLRAD	P569
					EJE (CONJUNTO)	EIXO CONJUNTO 4WD	AXLE ASSY, 4WD	AXLE ASSY, 4WD	
1		**87404289**		1	HOUSING	ALLOGGIAMENTO	CARTER	GEHÄUSE	014V
					CAVIDAD	ALOJAMENTO	HUIS	HUS	
2		**221-887**		2	PLUG 3/4	TAPPO	BOUCHON	STOPFEN	6400
					TAPÓN	BUJAO	PLUG	PROP	
3		**295163A2**		1	KNUCKLE, STEERING Right Hand				
						ARTICOLAZIONE	FUSEE	ACHSSCHENKEL	4880
					CHARNELA	ARTICULACAO DIRECAC	KNUCKLE, STEERING	KNUCKLE, STEERING	
3		**295162A2**		1	KNUCKLE, STEERING Left Hand				
						ARTICOLAZIONE	FUSEE	ACHSSCHENKEL	4880
					CHARNELA	ARTICULACAO DIRECAC	KNUCKLE, STEERING	KNUCKLE, STEERING	
4		**235628A1**		1	BUSHING	BOCCOLA	BAGUE	BUECHSE	095B
					CASQUILLO	CASQUILHO	LAGERBUS	BOESNING	
5		**128647A1**		1	SEAL	ANELLO DI TENUTA	JOINT	DICHTUNG	132A
					ANILLO DE CIERRE	ANEL DE VEDACAO	DICHTINGSRING	PAKNINGSRING	
6		**382635A1**		3	RETAINER	RITEGNO	RETENEUR	HALTEVORRICHTUNG	109R
					RETENEDOR	RETENTOR	HOUDER	HOLDER	
		377919A1		4	BEARING Inc. 7, 8	CUSCINETTO	ROULEMENT	LAGER	0600
					COJINETE	ROLAMENTO	BEARING	BEARING	
7		**NSS**		1	NOT SERVICED SEPARATELY Ring, Inner				
						NON FORNITO SEPARAT	NON FOURNI SEPAREMI	KEIN ERSATZTEIL	064N
					NO SE REPARA SEPARA	NOT SERVICED SEPARA	NIET ALLEEN VERKRIJG	NOT SERVICED SEPARA	
8		**NSS**		1	NOT SERVICED SEPARATELY Ring, Outer				
						NON FORNITO SEPARAT	NON FOURNI SEPAREMI	KEIN ERSATZTEIL	064N
					NO SE REPARA SEPARA	NOT SERVICED SEPARA	NIET ALLEEN VERKRIJG	NOT SERVICED SEPARA	
9		**1277270C1**		4	SEAL, OIL	PARAOLIO	JOINT D'HUILE	ÖLDICHTUNG	P278
					JUNTA DE ACEITE	VEDADOR DE OLEO	OIL-SEAL	OLIESEGL	
10		**382635A1**		1	RETAINER If Equipped (Not Shown)				
						RITEGNO	RETENEUR	HALTEVORRICHTUNG	109R
					RETENEDOR	RETENTOR	HOUDER	HOLDER	
10		**87440524**		1	RETAINER If Equipped (Shown)				
						RITEGNO	RETENEUR	HALTEVORRICHTUNG	109R
					RETENEDOR	RETENTOR	HOUDER	HOLDER	
		310960A1		1	KIT, SHIM Inc. 11	KIT SPESSORE	JEU DE CALES	EINSTELLSCHEIBEN, SC	P688
					JUEGO DE CALCES	JUEGO DE CALCES	PACKAGE, SHIMS	KIT, AFSTANDSSTYKKE	
11		**NSS**		5	NOT SERVICED SEPARATELY Shim				
						NON FORNITO SEPARAT	NON FOURNI SEPAREMI	KEIN ERSATZTEIL	064N
					NO SE REPARA SEPARA	NOT SERVICED SEPARA	NIET ALLEEN VERKRIJG	NOT SERVICED SEPARA	
11		**NSS**		5	NOT SERVICED SEPARATELY Shim				
						NON FORNITO SEPARAT	NON FOURNI SEPAREMI	KEIN ERSATZTEIL	064N
					NO SE REPARA SEPARA	NOT SERVICED SEPARA	NIET ALLEEN VERKRIJG	NOT SERVICED SEPARA	
11		**NSS**		5	NOT SERVICED SEPARATELY Shim				
						NON FORNITO SEPARAT	NON FOURNI SEPAREMI	KEIN ERSATZTEIL	064N
					NO SE REPARA SEPARA	NOT SERVICED SEPARA	NIET ALLEEN VERKRIJG	NOT SERVICED SEPARA	
11		**NSS**		5	NOT SERVICED SEPARATELY Shim				
						NON FORNITO SEPARAT	NON FOURNI SEPAREMI	KEIN ERSATZTEIL	064N
					NO SE REPARA SEPARA	NOT SERVICED SEPARA	NIET ALLEEN VERKRIJG	NOT SERVICED SEPARA	

05-13		p2	11/04

MFD AXLE HOUSING ASSEMBLY - SUSPENDED WITH 10 BOLT HUB, WITHOUT DIFFERENTIAL LOCK
GRUPPO DELL'ALLOGGIAMENTO DELL'ASSALE MFD - SOSPESO CON MOZZO A 10 BULLONI
CARTER D'ESSIEU DU PONT AVANT SUSPENDU AVEC MOYEU À 10 BOULONS, SANS BLOCAGE DE DIFFÉRENTIEL
ALLRADANTRIEBS-ACHSGEHÄUSE - GEFEDERT MIT 10 NABENSCHRAUBEN OHNE DIFFERENTIALSPERRE

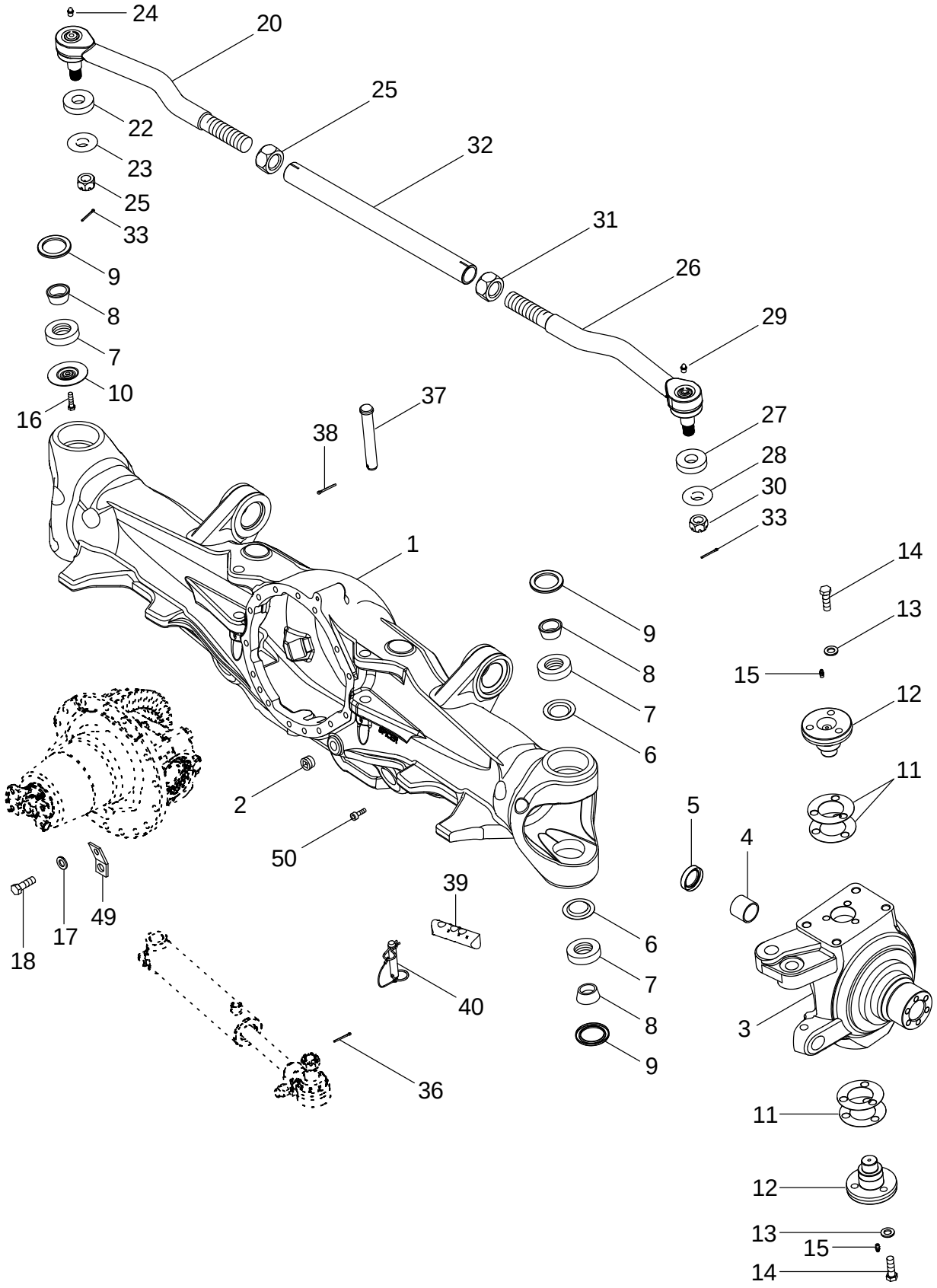

CONJUNTO DEL ALOJAMIENTO DEL EJE DE LA TDM - SUSPENDIDO CON CUBO DE 10 PERNOS
CONJUNTO DA ESTRUTURA DO EIXO DA TMD - SUSPENSO, COM CUBO DE 10 PARAFUSOS, SEM TRANCA DO DIFERENCIAL
MFD-ASBEHUIZING - BEWEEGBAAR OPGEHANGEN MET NAAF MET 10 BOUTEN , ZONDER DIFFERENTIEELVERGRENDELING
MFD AKSELHUSSAMLING - OPHÆNGT MED 10 BOLTNAV, UDEN DIFFERENTIALESPÆRRE

R	N	P.N.	MOD	Q	Description Denominacion	Descrizione Denominação	Description Beschrijving	Bezeichnung Beskrivelse	L.C.
11		NSS		5	NOT SERVICED SEPARATELY Shim				
						NON FORNITO SEPARAT	NON FOURNI SEPAREMI	KEIN ERSATZTEIL	064N
					NO SE REPARA SEPARA	NOT SERVICED SEPARA	NIET ALLEEN VERKRIJG	NOT SERVICED SEPARA	
11		NSS		5	NOT SERVICED SEPARATELY Shim				
						NON FORNITO SEPARAT	NON FOURNI SEPAREMI	KEIN ERSATZTEIL	064N
					NO SE REPARA SEPARA	NOT SERVICED SEPARA	NIET ALLEEN VERKRIJG	NOT SERVICED SEPARA	
12		378409A1		4	CAP	TAPPO SERBATOIO	CHAPEAU	KAPPE	052T
					TAPON DEL DEPOSITO	TAMPAO DE RESERVAT	RESERVOIRDOP	TANKDAEKSEL	
13		896-11014		12	WASHER 15,5 x 28 x 3 mm	ROSETTA PIANA	RONDELLE	SCHEIBE	9720
					ARANDELA	ANILHA	SLUITRING	FLADSKIVE	
14		627-14045		12	SCREW M14 x 45; 10,9	VITE	VIS	SCHRAUBE	7450
					TORNILLO	PARAFUSO	SCHROEF	SKRUE	
15		219-1		4	NIPPLE, LUBE 1/8 PT x 21/32				
						INGRASSATORE	GRAISSEUR	SCHMIERNIPPEL	060I
					ENGRASADOR	LUBRIFICADOR	SMEERNIPPEL	SMØRENIPPEL	
16		86977726		1	SCREW M6 x 12; 8.8, If Equipped				
						VITE	VIS	SCHRAUBE	040V
					TORNILLO	PARAFUSO	SCHROEF	SKRUE	
17		896-11014		16	WASHER 15,5 x 28 x 3 mm	ROSETTA PIANA	RONDELLE	SCHEIBE	9720
					ARANDELA	ANILHA	SLUITRING	FLADSKIVE	
18		627-14045		16	SCREW M14 x 45; 10,9	VITE	VIS	SCHRAUBE	7450
					TORNILLO	PARAFUSO	SCHROEF	SKRUE	
20		302643A1	a	1	BALL JOINT Left Hand Threads, Inc. 21 - 24				
						GIUNTO SFERICO	ROTULE	KUGELGELENK	070G
					JUNTA DE ROTULA	JUNTA ESFÉRICA	KOGELGEWRICHT	KUGLELED	
20		87455778	b	1	JOINT ASSY. Left Hand Threads, Inc. 21 - 24				
						UNIVERSALE UNITO ASS	JOINT-CARDAN ASS.	GELENK (KPLT.)	P548
					UNION (CONJUNTO)	UNIAO CONJUNTO	JOINT ASSY.	JOINT ASSY.	
		333617A1	a	1	KIT, GASKET Inc. 21, 22	CONFEZIONE, GUARNIZ	JEU JOINTS ETANCHEIT	DICHTUNGSSATZ	3740
					EMPAQUE DE JUNTAS	JOGO DE JUNTAS	KIT, GASKET	PAKNINGS PAKKE	
		87455780	b	1	KIT Inc. 21, 22	CORREDO	KIT	SATZ	305C
					EQUIPO	KIT	KIT	UDSTYR	
21		NSS		1	NOT SERVICED SEPARATELY Boot				
						NON FORNITO SEPARAT	NON FOURNI SEPAREMI	KEIN ERSATZTEIL	064N
					NO SE REPARA SEPARA	NOT SERVICED SEPARA	NIET ALLEEN VERKRIJG	NOT SERVICED SEPARA	
22		NSS		1	NOT SERVICED SEPARATELY Spacer				
						NON FORNITO SEPARAT	NON FOURNI SEPAREMI	KEIN ERSATZTEIL	064N
					NO SE REPARA SEPARA	NOT SERVICED SEPARA	NIET ALLEEN VERKRIJG	NOT SERVICED SEPARA	
23		429-1314	a	1	SLOTTED NUT 7/8 NF; 8	DADO SCANALATO	ECROU A ENCOCHES	SCHLITZMUTTER	Z477
					TUERCA ENTALLADA	PORCA ENTALHADA	SLOTTED NUT	KÆRVMØTRIK	
23		87455806	b	1	SLOTTED NUT M22	DADO SCANALATO	ECROU A ENCOCHES	SCHLITZMUTTER	Z477
					TUERCA ENTALLADA	PORCA ENTALHADA	SLOTTED NUT	KÆRVMØTRIK	
24		219-6	a	1	FITTING Grease 1/4 str	RACCORDO	RACCORD	ANSCHLUSSSTÜCK	3300
					CONEXION	CONEXAO	FITTING	FITTING	
24		87455807	b	1	FITTING Grease	RACCORDO	RACCORD	ANSCHLUSSSTÜCK	3300
					CONEXION	CONEXAO	FITTING	FITTING	

(a) BSN FUSA6800000
(b) ASN FUSA6800000

05-13		p3	11/04

MFD AXLE HOUSING ASSEMBLY - SUSPENDED WITH 10 BOLT HUB, WITHOUT DIFFERENTIAL LOCK
GRUPPO DELL'ALLOGGIAMENTO DELL'ASSALE MFD - SOSPESO CON MOZZO A 10 BULLONI
CARTER D'ESSIEU DU PONT AVANT SUSPENDU AVEC MOYEU À 10 BOULONS, SANS BLOCAGE DE DIFFÉRENTIEL
ALLRADANTRIEBS-ACHSGEHÄUSE - GEFEDERT MIT 10 NABENSCHRAUBEN OHNE DIFFERENTIALSPERRE

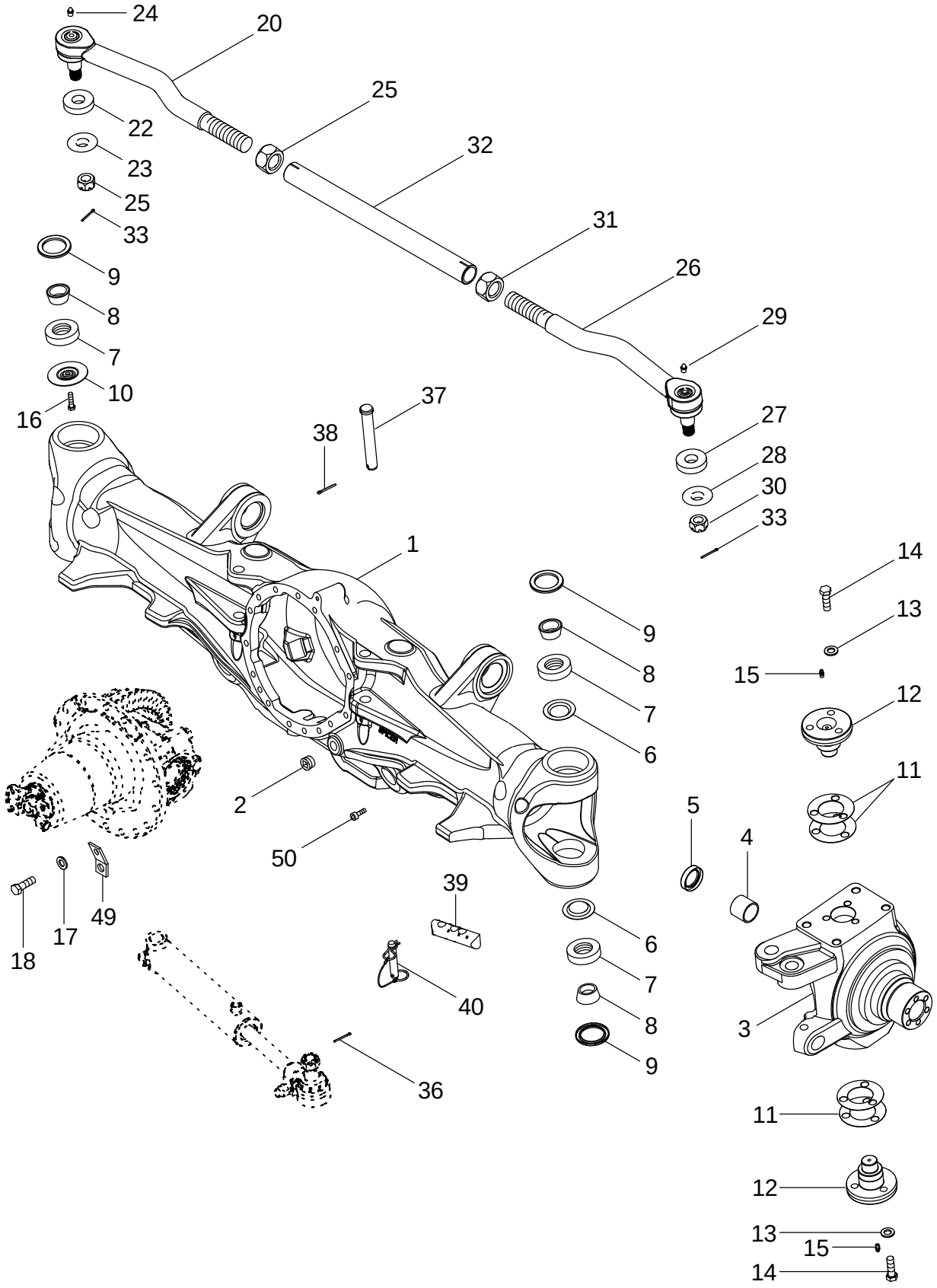

CONJUNTO DEL ALOJAMIENTO DEL EJE DE LA TDM - SUSPENDIDO CON CUBO DE 10 PERNOS
CONJUNTO DA ESTRUTURA DO EIXO DA TMD - SUSPENSO, COM CUBO DE 10 PARAFUSOS, SEM TRANCA DO DIFERENCIAL
MFD-ASBEHUIZING - BEWEEGBAAR OPGEHANGEN MET NAAF MET 10 BOUTEN , ZONDER DIFFERENTIEELVERGRENDELING
MFD AKSELHUSSAMLING - OPHÆNGT MED 10 BOLTNAV, UDEN DIFFERENTIALESPÆRRE

R	N	P.N.	MOD	Q	Description Denominacion	Descrizione Denominação	Description Beschrijving	Bezeichnung Beskrivelse	L.C.
25		302648A1	a	1	NUT 1-3/8, Left Hand Threads				
						DADO	ECROU	MUTTER	010D
					TUERCA	PORCA	MOER	MØTRIK	
25		87455777	b	1	NUT M36, Left Hand Threads				
						DADO	ECROU	MUTTER	010D
					TUERCA	PORCA	MOER	MØTRIK	
26		302645A1	a	1	BALL JOINT Right Hand Threads, Inc. 27 - 30				
						GIUNTO SFERICO	ROTULE	KUGELGELENK	070G
					JUNTA DE ROTULA	JUNTA ESFÉRICA	KOGELGEWRICHT	KUGLELED	
26		87455779	b	1	JOINT ASSY. Right Hand Threads, Inc. 27 - 30				
						UNIVERSALE UNITO ASS	JOINT-CARDAN ASS.	GELENK (KPLT.)	P548
					UNION (CONJUNTO)	UNIAO CONJUNTO	JOINT ASSY.	JOINT ASSY.	
		333617A1	a	1	KIT, GASKET Inc. 27, 28	CONFEZIONE, GUARNIZ	JEU JOINTS ETANCHEIT	DICHTUNGSSATZ	3740
					EMPAQUE DE JUNTAS	JOGO DE JUNTAS	KIT, GASKET	PAKNINGS PAKKE	
		87455780	b	1	KIT Inc. 27, 28	CORREDO	KIT	SATZ	305C
					EQUIPO	KIT	KIT	UDSTYR	
27		NSS		1	NOT SERVICED SEPARATELY Boot				
						NON FORNITO SEPARAT	NON FOURNI SEPAREMI	KEIN ERSATZTEIL	064N
					NO SE REPARA SEPARA	NOT SERVICED SEPARA	NIET ALLEEN VERKRIJG	NOT SERVICED SEPARA	
28		NSS		1	NOT SERVICED SEPARATELY Spacer				
						NON FORNITO SEPARAT	NON FOURNI SEPAREMI	KEIN ERSATZTEIL	064N
					NO SE REPARA SEPARA	NOT SERVICED SEPARA	NIET ALLEEN VERKRIJG	NOT SERVICED SEPARA	
29		219-6	a	1	FITTING Grease 1/4 str	RACCORDO	RACCORD	ANSCHLUSSSTÜCK	3300
					CONEXION	CONEXAO	FITTING	FITTING	
29		87455807	b	1	FITTING Grease	RACCORDO	RACCORD	ANSCHLUSSSTÜCK	3300
					CONEXION	CONEXAO	FITTING	FITTING	
30		429-1314	a	1	SLOTTED NUT 7/8 NF; 8	DADO SCANALATO	ECROU A ENCOCHES	SCHLITZMUTTER	Z477
					TUERCA ENTALLADA	PORCA ENTALHADA	SLOTTED NUT	KÆRVMØTRIK	
30		87455806	b	1	SLOTTED NUT M22	DADO SCANALATO	ECROU A ENCOCHES	SCHLITZMUTTER	Z477
					TUERCA ENTALLADA	PORCA ENTALHADA	SLOTTED NUT	KÆRVMØTRIK	
31		302649A1	a	1	NUT 1-3/8, Right Hand Threads				
						DADO	ECROU	MUTTER	010D
					TUERCA	PORCA	MOER	MØTRIK	
31		87455776	b	1	NUT M36, Right Hand Threads				
						DADO	ECROU	MUTTER	010D
					TUERCA	PORCA	MOER	MØTRIK	
32		302647A1	a	1	TUBE	TUBETTO	TUBE	SCHLAUCH	195T
					TUBO	TUBO	BUISJE	RØR	
32		87455775	b	1	TUBE	TUBETTO	TUBE	SCHLAUCH	195T
					TUBO	TUBO	BUISJE	RØR	
33		432-820		2	PIN, SPLIT (COTTER) 1/8 x 1-1/4				
						COPPIGLIA	GOUPILLE	SPLINT	270C
					PASADOR ABIERTO	TROCO DE ABRIR	SPLITPEN	SPLITBOLT	
36		432-820		2	PIN, SPLIT (COTTER) 1/8 x 1-1/4				
						COPPIGLIA	GOUPILLE	SPLINT	270C
					PASADOR ABIERTO	TROCO DE ABRIR	SPLITPEN	SPLITBOLT	

(a) BSN FUSA6800000
(b) ASN FUSA6800000

05-13		p4	11/04

MFD AXLE HOUSING ASSEMBLY - SUSPENDED WITH 10 BOLT HUB, WITHOUT DIFFERENTIAL LOCK
GRUPPO DELL'ALLOGGIAMENTO DELL'ASSALE MFD - SOSPESO CON MOZZO A 10 BULLONI
CARTER D'ESSIEU DU PONT AVANT SUSPENDU AVEC MOYEU À 10 BOULONS, SANS BLOCAGE DE DIFFÉRENTIEL
ALLRADANTRIEBS-ACHSGEHÄUSE - GEFEDERT MIT 10 NABENSCHRAUBEN OHNE DIFFERENTIALSPERRE

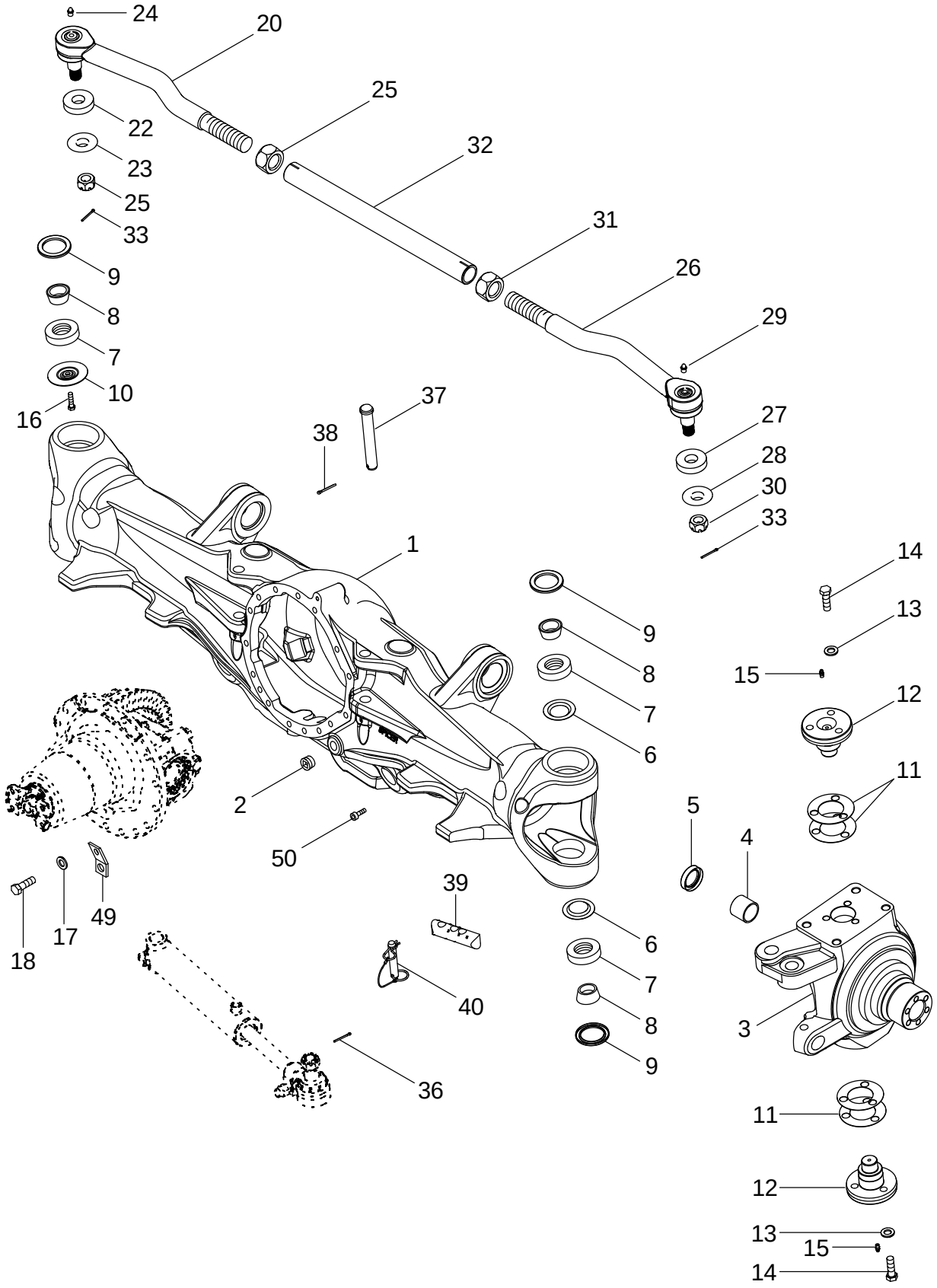

CONJUNTO DEL ALOJAMIENTO DEL EJE DE LA TDM - SUSPENDIDO CON CUBO DE 10 PERNOS
CONJUNTO DA ESTRUTURA DO EIXO DA TMD - SUSPENSO, COM CUBO DE 10 PARAFUSOS, SEM TRANCA DO DIFERENCIAL
MFD-ASBEHUIZING - BEWEEGBAAR OPGEHANGEN MET NAAF MET 10 BOUTEN , ZONDER DIFFERENTIEELVERGRENDELING
MFD AKSELHUSSAMLING - OPHÆNGT MED 10 BOLTNAV, UDEN DIFFERENTIALESPÆRRE

R	N	P.N.	MOD	Q	Description Denominacion	Descrizione Denominação	Description Beschrijving	Bezeichnung Beskrivelse	L.C.
37		87406480		2	PIN PERNO	PERNO PERNO	AXE PEN	BOLZEN STIFT	080P
38		733-4032		2	PIN, SPLIT (COTTER) 4 x 32 mm PASADOR ABIERTO	COPPIGLIA TROCO DE ABRIR	GOUPILLE SPLITPEN	SPLINT SPLITBOLT	270C
39		281914A1		2	ROD Steering Stop, Short, 3 Hole (Shown) VARILLA	ASTA HASTE	TRINGLE STANG	STANGE STANG	090A
39		451995A1		2	ROD, ADJUSTMENT Steering Stop, Long, 4 Hole (Not Shown) VARILLA DE REGLAJE	ASTA DI REGOLAZIONE TIRANTE DE AFINACAO	TRINGLE DE RÉGLAGE REGELBARE STANG	EINSTELLSTANGE JUSTERSTANG	088A
40		87404993		2	PIN, AXLE PIVOTE DE EJE	PERNO DELL'ASSALE PIVOTE DE EJE	PIVOT D'ESSIEU PIN, AXLE	ACHSBOLZEN AKSELPIND	Z160
49		352782A1		1	STRAP BANDA	BANDELLA BANDA	SANGLE RIEM	GURT STROP	532B
50		863-8020		2	SCREW M8 x 20; 12.9 TORNILLO	VITE PARAFUSO	VIS SCHROEF	SCHRAUBE SKRUE	7450

05-14		p1	11/04

MFD AXLE HOUSING ASSEMBLY - SUSPENDED WITH 10 BOLT HUB, WITH DIFFERENTIAL LOCK
GRUPPO DELL'ALLOGGIAMENTO DELL'ASSALE MFD - SOSPESO CON MOZZO A 10 BULLONI
CARTER D'ESSIEU DU PONT AVANT SUSPENDU AVEC MOYEU À 10 BOULONS, AVEC BLOCAGE DE DIFFÉRENTIEL
ALLRADANTRIEBS-ACHSGEHÄUSE - GEFEDERT MIT 10 NABENSCHRAUBEN MIT DIFFERENTIALSPERRE

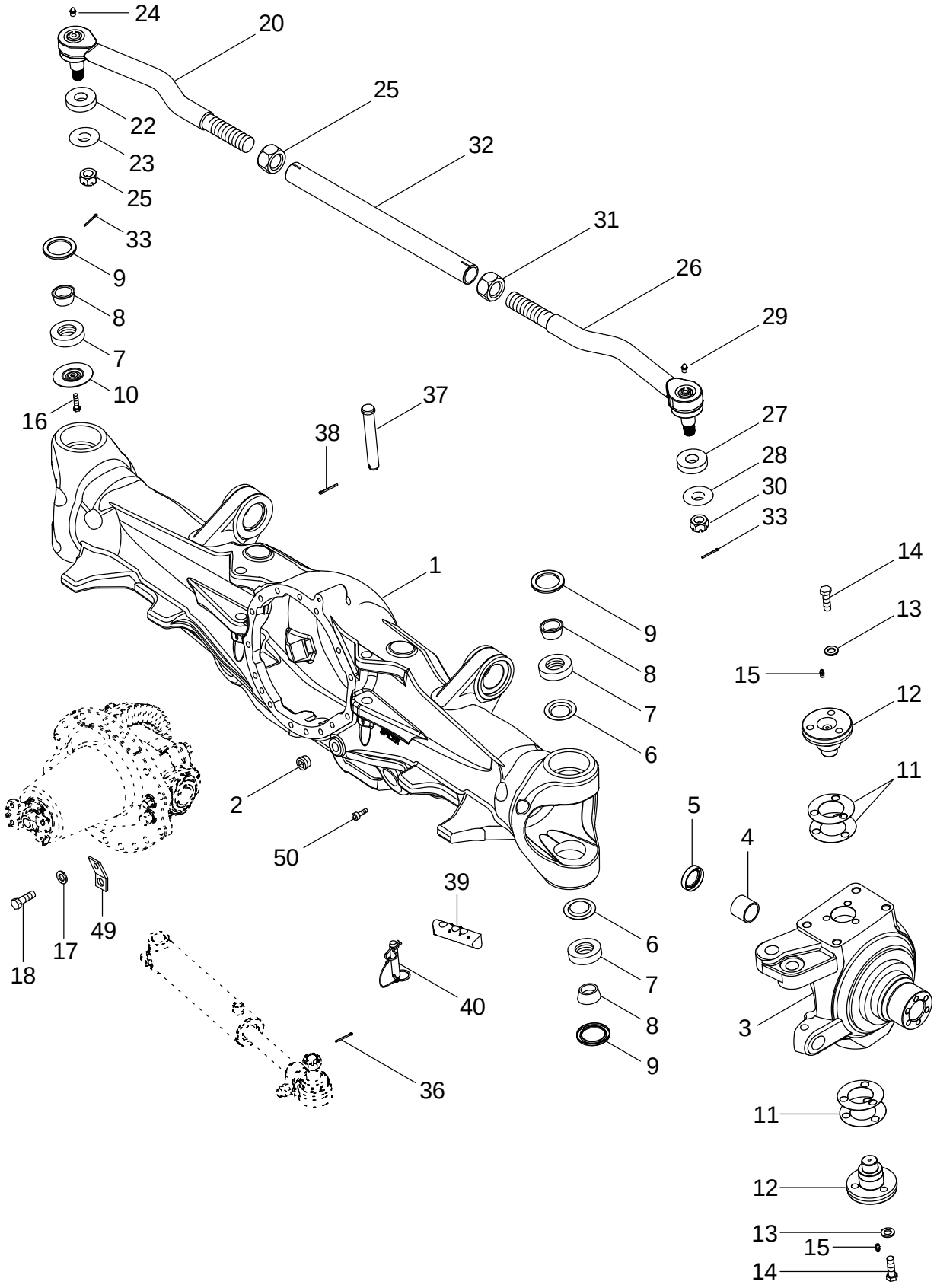

CONJUNTO DEL ALOJAMIENTO DEL EJE DE LA TDM - SUSPENDIDO CON CUBO DE 10 PERNOS
CONJUNTO DA ESTRUTURA DO EIXO DA TMD - SUSPENSO, COM CUBO DE 10 PARAFUSOS, COM TRANCA DO DIFERENCIAL
MFD-ASBEHUIZING - BEWEEGBAAR OPGEHANGEN MET NAAF MET 10 BOUTEN , MET DIFFERENTIEELVERGRENDELING
MFD AKSELHUSSAMLING - OPHÆNGT MED 10 BOLTNAV, MED DIFFERENTIALESPÆRRE

R	N	P.N.	MOD	Q	Description Denominacion	Descrizione Denominação	Description Beschrijving	Bezeichnung Beskrivelse	L.C.
		407298A6		1	AXLE ASSY, 4WD Complete With Differential And Planetaries				
						ASSALE, COMPLESSIVO	PONT AVANT	ACHSE KOMP. ALLRAD	P569
					EJE (CONJUNTO)	EIXO CONJUNTO 4WD	AXLE ASSY, 4WD	AXLE ASSY, 4WD	
1		**87404290**		1	HOUSING, AXLE	ALLOGG, ASSALE	CARTER DE PONT	ACHSGEHÄUSE	Z161
					CÁRTER DE PUENTE	CÁRTER DE PUENTE	HOUSING, AXLE	AKSELHUS	
2		**221-887**		2	PLUG 3/4	TAPPO	BOUCHON	STOPFEN	6400
					TAPÓN	BUJAO	PLUG	PROP	
3		**295163A2**		1	KNUCKLE, STEERING Right Hand				
						ARTICOLAZIONE	FUSEE	ACHSSCHENKEL	4880
					CHARNELA	ARTICULACAO DIRECAC	KNUCKLE, STEERING	KNUCKLE, STEERING	
3		**295162A2**		1	KNUCKLE, STEERING Left Hand				
						ARTICOLAZIONE	FUSEE	ACHSSCHENKEL	4880
					CHARNELA	ARTICULACAO DIRECAC	KNUCKLE, STEERING	KNUCKLE, STEERING	
4		**235628A1**		1	BUSHING	BOCCOLA	BAGUE	BUECHSE	095B
					CASQUILLO	CASQUILHO	LAGERBUS	BOESNING	
5		**128647A1**		1	SEAL	ANELLO DI TENUTA	JOINT	DICHTUNG	132A
					ANILLO DE CIERRE	ANEL DE VEDACAO	DICHTINGSRING	PAKNINGSRING	
6		**382635A1**		3	RETAINER	RITEGNO	RETENEUR	HALTEVORRICHTUNG	109R
					RETENEDOR	RETENTOR	HOUDER	HOLDER	
		377919A1		4	BEARING Inc. 7, 8	CUSCINETTO	ROULEMENT	LAGER	0600
					COJINETE	ROLAMENTO	BEARING	BEARING	
7		**NSS**		1	NOT SERVICED SEPARATELY Ring, Inner				
						NON FORNITO SEPARAT	NON FOURNI SEPAREMI	KEIN ERSATZTEIL	064N
					NO SE REPARA SEPARA	NOT SERVICED SEPARA	NIET ALLEEN VERKRIJG	NOT SERVICED SEPARA	
8		**NSS**		1	NOT SERVICED SEPARATELY Ring, Outer				
						NON FORNITO SEPARAT	NON FOURNI SEPAREMI	KEIN ERSATZTEIL	064N
					NO SE REPARA SEPARA	NOT SERVICED SEPARA	NIET ALLEEN VERKRIJG	NOT SERVICED SEPARA	
9		**1277270C1**		4	SEAL, OIL	PARAOLIO	JOINT D'HUILE	ÖLDICHTUNG	P278
					JUNTA DE ACEITE	VEDADOR DE OLEO	OIL-SEAL	OLIESEGL	
10		**382635A1**		1	RETAINER If Equipped (Not Shown)				
						RITEGNO	RETENEUR	HALTEVORRICHTUNG	109R
					RETENEDOR	RETENTOR	HOUDER	HOLDER	
10		**87440524**		1	RETAINER If Equipped (Shown)				
						RITEGNO	RETENEUR	HALTEVORRICHTUNG	109R
					RETENEDOR	RETENTOR	HOUDER	HOLDER	
		310960A1		1	KIT, SHIM Inc. 11	KIT SPESSORE	JEU DE CALES	EINSTELLSCHEIBEN, SC	P688
					JUEGO DE CALCES	JUEGO DE CALCES	PACKAGE, SHIMS	KIT, AFSTANDSSTYKKE	
11		**NSS**		5	NOT SERVICED SEPARATELY Shim				
						NON FORNITO SEPARAT	NON FOURNI SEPAREMI	KEIN ERSATZTEIL	064N
					NO SE REPARA SEPARA	NOT SERVICED SEPARA	NIET ALLEEN VERKRIJG	NOT SERVICED SEPARA	
11		**NSS**		5	NOT SERVICED SEPARATELY Shim				
						NON FORNITO SEPARAT	NON FOURNI SEPAREMI	KEIN ERSATZTEIL	064N
					NO SE REPARA SEPARA	NOT SERVICED SEPARA	NIET ALLEEN VERKRIJG	NOT SERVICED SEPARA	
11		**NSS**		5	NOT SERVICED SEPARATELY Shim				
						NON FORNITO SEPARAT	NON FOURNI SEPAREMI	KEIN ERSATZTEIL	064N
					NO SE REPARA SEPARA	NOT SERVICED SEPARA	NIET ALLEEN VERKRIJG	NOT SERVICED SEPARA	
11		**NSS**		5	NOT SERVICED SEPARATELY Shim				
						NON FORNITO SEPARAT	NON FOURNI SEPAREMI	KEIN ERSATZTEIL	064N
					NO SE REPARA SEPARA	NOT SERVICED SEPARA	NIET ALLEEN VERKRIJG	NOT SERVICED SEPARA	

05-14		p2	11/04

MFD AXLE HOUSING ASSEMBLY - SUSPENDED WITH 10 BOLT HUB, WITH DIFFERENTIAL LOCK
GRUPPO DELL'ALLOGGIAMENTO DELL'ASSALE MFD - SOSPESO CON MOZZO A 10 BULLONI
CARTER D'ESSIEU DU PONT AVANT SUSPENDU AVEC MOYEU À 10 BOULONS, AVEC BLOCAGE DE DIFFÉRENTIEL
ALLRADANTRIEBS-ACHSGEHÄUSE - GEFEDERT MIT 10 NABENSCHRAUBEN MIT DIFFERENTIALSPERRE

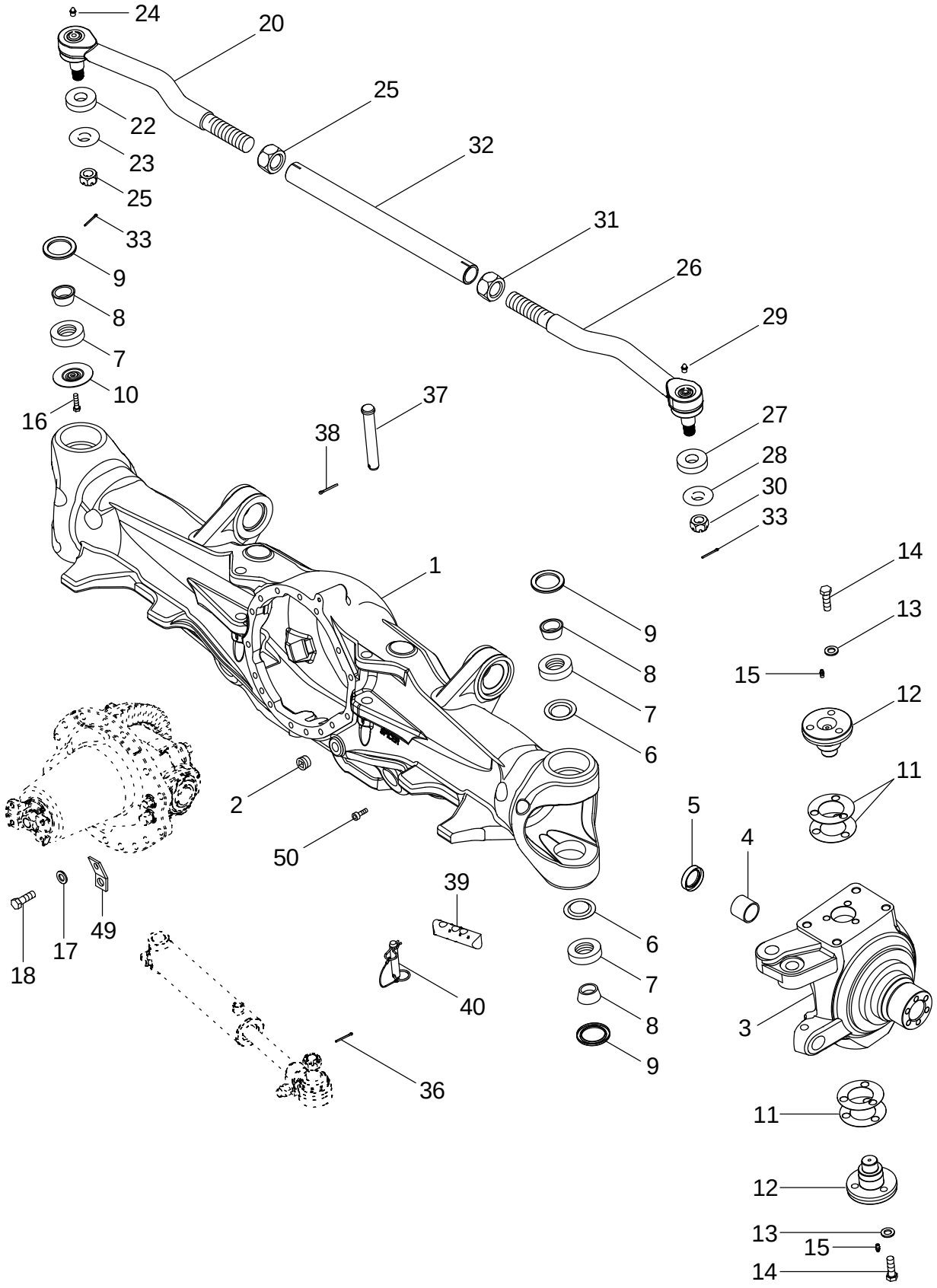

CONJUNTO DEL ALOJAMIENTO DEL EJE DE LA TDM - SUSPENDIDO CON CUBO DE 10 PERNOS
CONJUNTO DA ESTRUTURA DO EIXO DA TMD - SUSPENSO, COM CUBO DE 10 PARAFUSOS, COM TRANCA DO DIFERENCIAL
MFD-ASBEHUIZING - BEWEEGBAAR OPGEHANGEN MET NAAF MET 10 BOUTEN , MET DIFFERENTIEELVERGRENDELING
MFD AKSELHUSSAMLING - OPHÆNGT MED 10 BOLTNAV, MED DIFFERENTIALESPÆRRE

R	N	P.N.	MOD	Q	Description Denominacion	Descrizione Denominação	Description Beschrijving	Bezeichnung Beskrivelse	L.C.
11		NSS		5	NOT SERVICED SEPARATELY Shim				
						NON FORNITO SEPARAT	NON FOURNI SEPAREMI	KEIN ERSATZTEIL	064N
					NO SE REPARA SEPARA	NOT SERVICED SEPARA	NIET ALLEEN VERKRIJG	NOT SERVICED SEPARA	
11		NSS		5	NOT SERVICED SEPARATELY Shim				
						NON FORNITO SEPARAT	NON FOURNI SEPAREMI	KEIN ERSATZTEIL	064N
					NO SE REPARA SEPARA	NOT SERVICED SEPARA	NIET ALLEEN VERKRIJG	NOT SERVICED SEPARA	
12		378409A1		4	CAP	TAPPO SERBATOIO	CHAPEAU	KAPPE	052T
					TAPON DEL DEPOSITO	TAMPAO DE RESERVAT	RESERVOIRDOP	TANKDAEKSEL	
13		896-11014		12	WASHER 15,5 x 28 x 3 mm	ROSETTA PIANA	RONDELLE	SCHEIBE	9720
					ARANDELA	ANILHA	SLUITRING	FLADSKIVE	
14		627-14045		12	SCREW M14 x 45; 10,9	VITE	VIS	SCHRAUBE	7450
					TORNILLO	PARAFUSO	SCHROEF	SKRUE	
15		219-1		4	NIPPLE, LUBE 1/8 PT x 21/32				
						INGRASSATORE	GRAISSEUR	SCHMIERNIPPEL	060I
					ENGRASADOR	LUBRIFICADOR	SMEERNIPPEL	SMØRENIPPEL	
16		86977726		1	SCREW M6 x 12; 8.8, If Equipped				
						VITE	VIS	SCHRAUBE	040V
					TORNILLO	PARAFUSO	SCHROEF	SKRUE	
17		896-11014		16	WASHER 15,5 x 28 x 3 mm	ROSETTA PIANA	RONDELLE	SCHEIBE	9720
					ARANDELA	ANILHA	SLUITRING	FLADSKIVE	
18		627-14045		16	SCREW M14 x 45; 10,9	VITE	VIS	SCHRAUBE	7450
					TORNILLO	PARAFUSO	SCHROEF	SKRUE	
20		302643A1	a	1	BALL JOINT Left Hand Threads, Inc. 21 - 24				
						GIUNTO SFERICO	ROTULE	KUGELGELENK	070G
					JUNTA DE ROTULA	JUNTA ESFÉRICA	KOGELGEWRICHT	KUGLELED	
20		87455778	b	1	JOINT ASSY. Left Hand Threads, Inc. 21 - 24				
						UNIVERSALE UNITO ASS	JOINT-CARDAN ASS.	GELENK (KPLT.)	P548
					UNION (CONJUNTO)	UNIAO CONJUNTO	JOINT ASSY.	JOINT ASSY.	
		333617A1	a	1	KIT, GASKET Inc. 21, 22	CONFEZIONE, GUARNIZ	JEU JOINTS ETANCHEIT	DICHTUNGSSATZ	3740
					EMPAQUE DE JUNTAS	JOGO DE JUNTAS	KIT, GASKET	PAKNINGS PAKKE	
		87455780	b	1	KIT Inc. 21, 22	CORREDO	KIT	SATZ	305C
					EQUIPO	KIT	KIT	UDSTYR	
21		NSS		1	NOT SERVICED SEPARATELY Boot				
						NON FORNITO SEPARAT	NON FOURNI SEPAREMI	KEIN ERSATZTEIL	064N
					NO SE REPARA SEPARA	NOT SERVICED SEPARA	NIET ALLEEN VERKRIJG	NOT SERVICED SEPARA	
22		NSS		1	NOT SERVICED SEPARATELY Spacer				
						NON FORNITO SEPARAT	NON FOURNI SEPAREMI	KEIN ERSATZTEIL	064N
					NO SE REPARA SEPARA	NOT SERVICED SEPARA	NIET ALLEEN VERKRIJG	NOT SERVICED SEPARA	
23		429-1314	a	1	SLOTTED NUT 7/8 NF; 8	DADO SCANALATO	ECROU A ENCOCHES	SCHLITZMUTTER	Z477
					TUERCA ENTALLADA	PORCA ENTALHADA	SLOTTED NUT	KÆRVMØTRIK	
23		87455806	b	1	SLOTTED NUT M22	DADO SCANALATO	ECROU A ENCOCHES	SCHLITZMUTTER	Z477
					TUERCA ENTALLADA	PORCA ENTALHADA	SLOTTED NUT	KÆRVMØTRIK	
24		219-6	a	1	FITTING Grease 1/4 str	RACCORDO	RACCORD	ANSCHLUSSSTÜCK	3300
					CONEXION	CONEXAO	FITTING	FITTING	
24		87455807	b	1	FITTING Grease	RACCORDO	RACCORD	ANSCHLUSSSTÜCK	3300
					CONEXION	CONEXAO	FITTING	FITTING	

(a) BSN FUSA6800000
(b) ASN FUSA6800000

05-14		p3	11/04

MFD AXLE HOUSING ASSEMBLY - SUSPENDED WITH 10 BOLT HUB, WITH DIFFERENTIAL LOCK
GRUPPO DELL'ALLOGGIAMENTO DELL'ASSALE MFD - SOSPESO CON MOZZO A 10 BULLONI
CARTER D'ESSIEU DU PONT AVANT SUSPENDU AVEC MOYEU À 10 BOULONS, AVEC BLOCAGE DE DIFFÉRENTIEL
ALLRADANTRIEBS-ACHSGEHÄUSE - GEFEDERT MIT 10 NABENSCHRAUBEN MIT DIFFERENTIALSPERRE

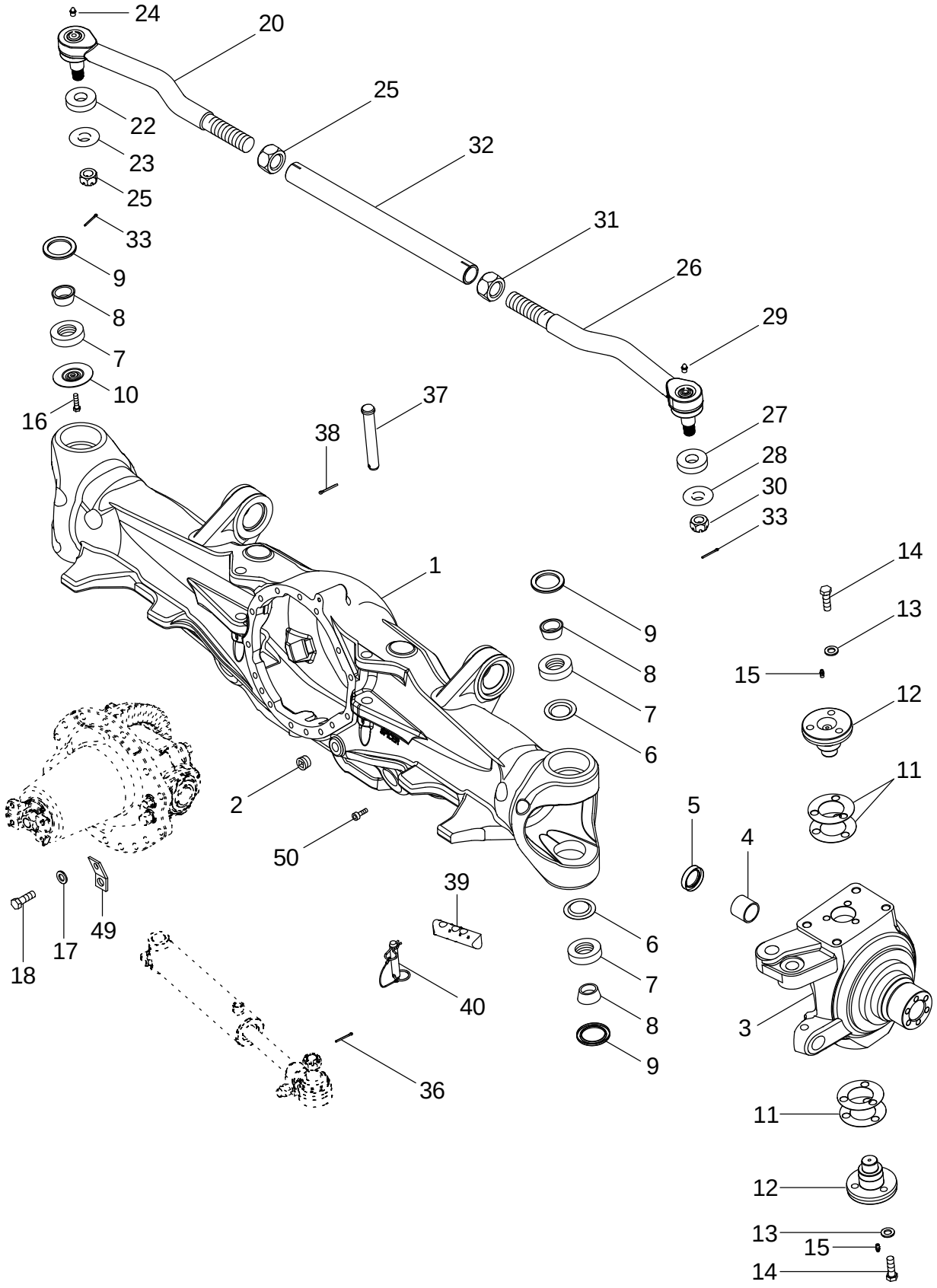

CONJUNTO DEL ALOJAMIENTO DEL EJE DE LA TDM - SUSPENDIDO CON CUBO DE 10 PERNOS
CONJUNTO DA ESTRUTURA DO EIXO DA TMD - SUSPENSO, COM CUBO DE 10 PARAFUSOS, COM TRANCA DO DIFERENCIAL
MFD-ASBEHUIZING - BEWEEGBAAR OPGEHANGEN MET NAAF MET 10 BOUTEN , MET DIFFERENTIEELVERGRENDELING
MFD AKSELHUSSAMLING - OPHÆNGT MED 10 BOLTNAV, MED DIFFERENTIALESPÆRRE

R	N	P.N.	MOD	Q	Description Denominacion	Descrizione Denominação	Description Beschrijving	Bezeichnung Beskrivelse	L.C.
25		302648A1	a	1	NUT 1-3/8, Left Hand Threads				
						DADO	ECROU	MUTTER	010D
					TUERCA	PORCA	MOER	MØTRIK	
25		87455777	b	1	NUT M36, Left Hand Threads				
						DADO	ECROU	MUTTER	010D
					TUERCA	PORCA	MOER	MØTRIK	
26		302645A1	a	1	BALL JOINT Right Hand Threads, Inc. 27 - 30				
						GIUNTO SFERICO	ROTULE	KUGELGELENK	070G
					JUNTA DE ROTULA	JUNTA ESFÉRICA	KOGELGEWRICHT	KUGLELED	
26		87455779	b	1	JOINT ASSY. Right Hand Threads, Inc. 27 - 30				
						UNIVERSALE UNITO ASS	JOINT-CARDAN ASS.	GELENK (KPLT.)	P548
					UNION (CONJUNTO)	UNIAO CONJUNTO	JOINT ASSY.	JOINT ASSY.	
		333617A1		1	KIT, GASKET Inc. 22, 28	CONFEZIONE, GUARNIZ	JEU JOINTS ETANCHEIT	DICHTUNGSSATZ	3740
					EMPAQUE DE JUNTAS	JOGO DE JUNTAS	KIT, GASKET	PAKNINGS PAKKE	
		333617A1	a	1	KIT, GASKET Inc. 27, 28	CONFEZIONE, GUARNIZ	JEU JOINTS ETANCHEIT	DICHTUNGSSATZ	3740
					EMPAQUE DE JUNTAS	JOGO DE JUNTAS	KIT, GASKET	PAKNINGS PAKKE	
		87455780	b	1	KIT Inc. 27, 28	CORREDO	KIT	SATZ	305C
					EQUIPO	KIT	KIT	UDSTYR	
27		NSS		1	NOT SERVICED SEPARATELY Boot				
						NON FORNITO SEPARAT	NON FOURNI SEPAREMI	KEIN ERSATZTEIL	064N
					NO SE REPARA SEPARA	NOT SERVICED SEPARA	NIET ALLEEN VERKRIJG	NOT SERVICED SEPARA	
28		NSS		1	NOT SERVICED SEPARATELY Spacer				
						NON FORNITO SEPARAT	NON FOURNI SEPAREMI	KEIN ERSATZTEIL	064N
					NO SE REPARA SEPARA	NOT SERVICED SEPARA	NIET ALLEEN VERKRIJG	NOT SERVICED SEPARA	
29		219-6	a	1	FITTING Grease 1/4 str	RACCORDO	RACCORD	ANSCHLUSSSTÜCK	3300
					CONEXION	CONEXAO	FITTING	FITTING	
29		87455807	b	1	FITTING Grease	RACCORDO	RACCORD	ANSCHLUSSSTÜCK	3300
					CONEXION	CONEXAO	FITTING	FITTING	
30		429-1314	a	1	SLOTTED NUT 7/8 NF; 8	DADO SCANALATO	ECROU A ENCOCHES	SCHLITZMUTTER	Z477
					TUERCA ENTALLADA	PORCA ENTALHADA	SLOTTED NUT	KÆRVMØTRIK	
30		87455806	b	1	SLOTTED NUT M22	DADO SCANALATO	ECROU A ENCOCHES	SCHLITZMUTTER	Z477
					TUERCA ENTALLADA	PORCA ENTALHADA	SLOTTED NUT	KÆRVMØTRIK	
31		302649A1	a	1	NUT 1-3/8, Right Hand Threads				
						DADO	ECROU	MUTTER	010D
					TUERCA	PORCA	MOER	MØTRIK	
31		87455776	b	1	NUT M36, Right Hand Threads				
						DADO	ECROU	MUTTER	010D
					TUERCA	PORCA	MOER	MØTRIK	
32		302647A1	a	1	TUBE	TUBETTO	TUBE	SCHLAUCH	195T
					TUBO	TUBO	BUISJE	RØR	
32		87455775	b	1	TUBE	TUBETTO	TUBE	SCHLAUCH	195T
					TUBO	TUBO	BUISJE	RØR	
33		432-820		2	PIN, SPLIT (COTTER) 1/8 x 1-1/4				
						COPPIGLIA	GOUPILLE	SPLINT	270C
					PASADOR ABIERTO	TROCO DE ABRIR	SPLITPEN	SPLITBOLT	

(a) BSN FUSA6800000
(b) ASN FUSA6800000

MFD AXLE HOUSING ASSEMBLY - SUSPENDED WITH 10 BOLT HUB, WITH DIFFERENTIAL LOCK
GRUPPO DELL'ALLOGGIAMENTO DELL'ASSALE MFD - SOSPESO CON MOZZO A 10 BULLONI
CARTER D'ESSIEU DU PONT AVANT SUSPENDU AVEC MOYEU À 10 BOULONS, AVEC BLOCAGE DE DIFFÉRENTIEL
ALLRADANTRIEBS-ACHSGEHÄUSE - GEFEDERT MIT 10 NABENSCHRAUBEN MIT DIFFERENTIALSPERRE

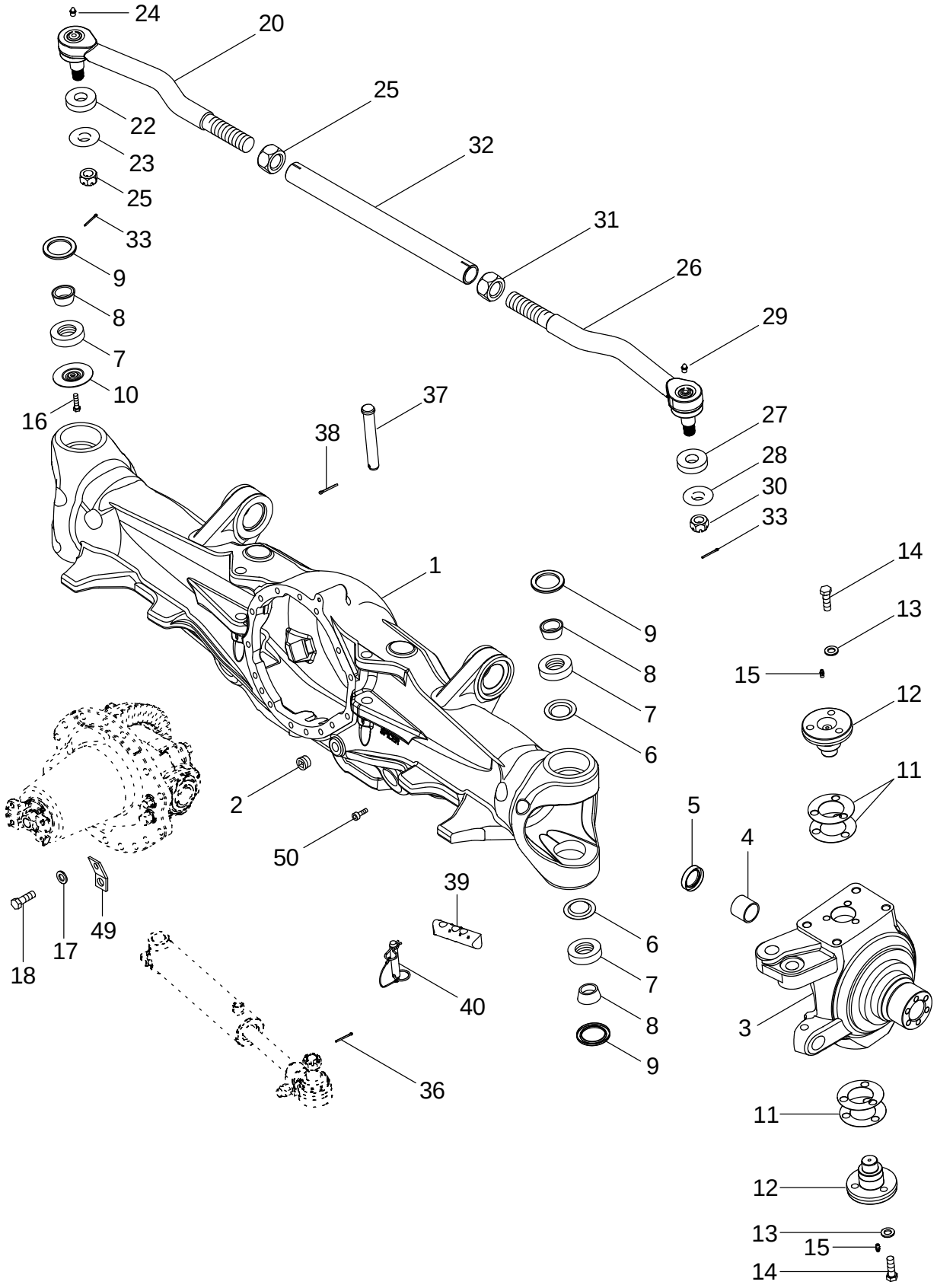

CONJUNTO DEL ALOJAMIENTO DEL EJE DE LA TDM - SUSPENDIDO CON CUBO DE 10 PERNOS
CONJUNTO DA ESTRUTURA DO EIXO DA TMD - SUSPENSO, COM CUBO DE 10 PARAFUSOS, COM TRANCA DO DIFERENCIAL
MFD-ASBEHUIZING - BEWEEGBAAR OPGEHANGEN MET NAAF MET 10 BOUTEN , MET DIFFERENTIEELVERGRENDELING
MFD AKSELHUSSAMLING - OPHÆNGT MED 10 BOLTNAV, MED DIFFERENTIALESPÆRRE

R	N	P.N.	MOD	Q	Description Denominacion	Descrizione Denominação	Description Beschrijving	Bezeichnung Beskrivelse	L.C.
36		432-820		2	PIN, SPLIT (COTTER) 1/8 x 1-1/4				
						COPPIGLIA	GOUPILLE	SPLINT	270C
					PASADOR ABIERTO	TROCO DE ABRIR	SPLITPEN	SPLITBOLT	
37		87406480		2	PIN	PERNO	AXE	BOLZEN	080P
					PERNO	PERNO	PEN	STIFT	
38		733-4032		2	PIN, SPLIT (COTTER) 4 x 32 mm				
						COPPIGLIA	GOUPILLE	SPLINT	270C
					PASADOR ABIERTO	TROCO DE ABRIR	SPLITPEN	SPLITBOLT	
39		281914A1		2	ROD Steering Stop, Short, 3 Hole (Shown)				
						ASTA	TRINGLE	STANGE	090A
					VARILLA	HASTE	STANG	STANG	
39		451995A1		2	ROD, ADJUSTMENT Steering Stop, Long, 4 Hole (Not Shown)				
						ASTA DI REGOLAZIONE	TRINGLE DE RÉGLAGE	EINSTELLSTANGE	088A
					VARILLA DE REGLAJE	TIRANTE DE AFINACAO	REGELBARE STANG	JUSTERSTANG	
40		87404993		2	PIN, AXLE	PERNO DELL'ASSALE	PIVOT D'ESSIEU	ACHSBOLZEN	Z160
					PIVOTE DE EJE	PIVOTE DE EJE	PIN, AXLE	AKSELPIND	
49		352782A1		1	STRAP	BANDELLA	SANGLE	GURT	532B
					BANDA	BANDA	RIEM	STROP	
50		863-8020		2	SCREW M8 x 20; 12.9	VITE	VIS	SCHRAUBE	7450
					TORNILLO	PARAFUSO	SCHROEF	SKRUE	

05-15		p1	11/04

MFD AXLE HOUSING ASSEMBLY - SUSPENDED WITH 12 BOLT HUB, WITH DIFFERENTIAL LOCK
GRUPPO DELL'ALLOGGIAMENTO DELL'ASSALE MFD - SOSPESO CON MOZZO A 12 BULLONI
CARTER D'ESSIEU DU PONT AVANT SUSPENDU AVEC MOYEU À 12 BOULONS, AVEC BLOCAGE DE DIFFÉRENTIEL
ALLRADANTRIEBS-ACHSGEHÄUSE - GEFEDERT MIT 12 NABENSCHRAUBEN MIT DIFFERENTIALSPERRE

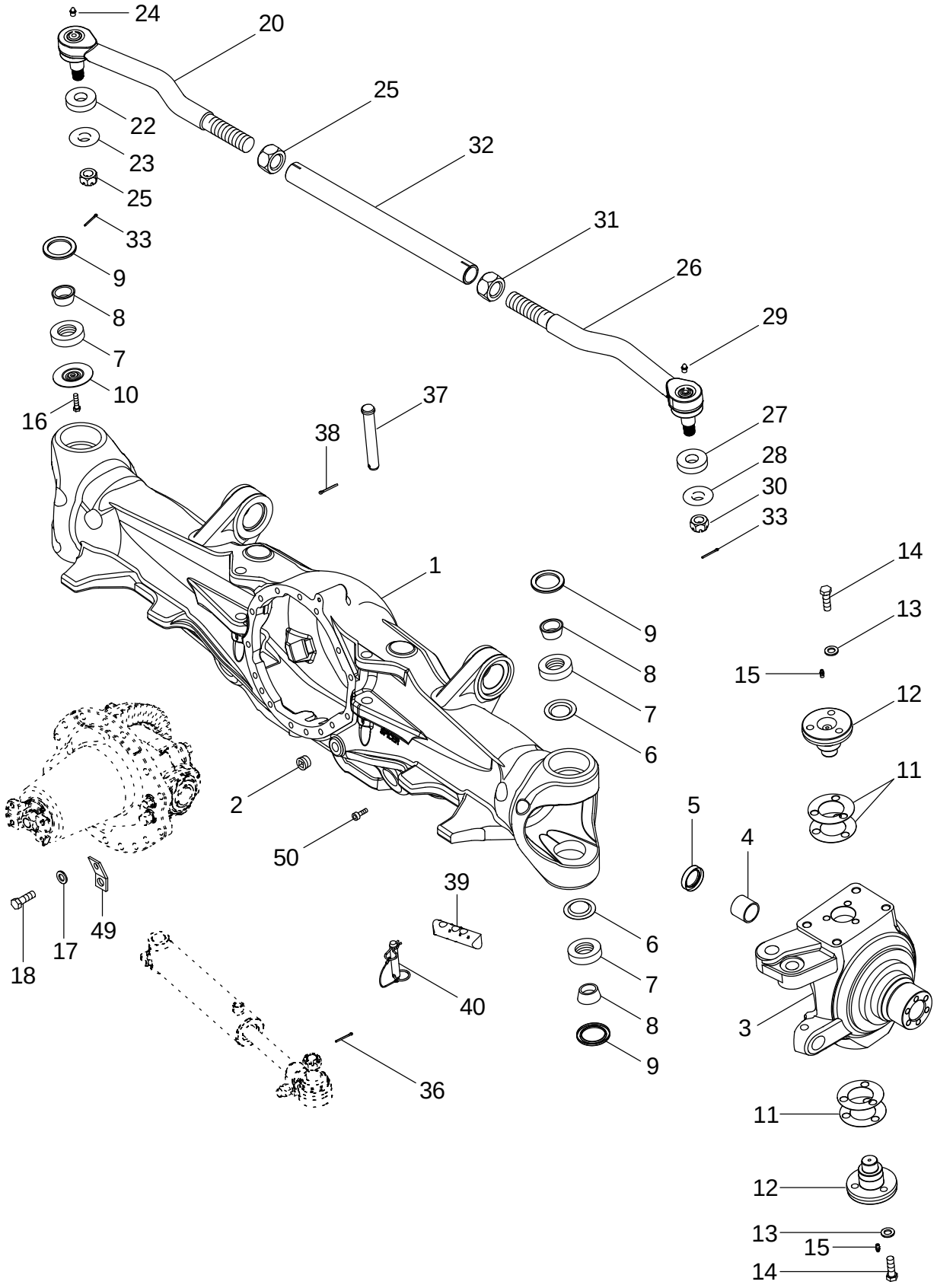

CONJUNTO DEL ALOJAMIENTO DEL EJE DE LA TDM - SUSPENDIDO CON CUBO DE 12 PERNOS
CONJUNTO DA ESTRUTURA DO EIXO DA TMD - SUSPENSO, COM CUBO DE 12 PARAFUSOS, COM TRANCA DO DIFERENCIAL
MFD-ASBEHUIZING - BEWEEGBAAR OPGEHANGEN MET NAAF MET 12 BOUTEN , MET DIFFERENTIEELVERGRENDELING
MFD AKSELHUSSAMLING - OPHÆNGT MED 12 BOLTNAV, MED DIFFERENTIALESPÆRRE

R	N	P.N.	MOD	Q	Description Denominacion	Descrizione Denominação	Description Beschrijving	Bezeichnung Beskrivelse	L.C.
		407300A6		1	AXLE ASSY, 4WD Complete With Differential And Planetaries				
						ASSALE, COMPLESSIVO	PONT AVANT	ACHSE KOMP. ALLRAD	P569
					EJE (CONJUNTO)	EIXO CONJUNTO 4WD	AXLE ASSY, 4WD	AXLE ASSY, 4WD	
1		87404290		1	HOUSING, AXLE	ALLOGG, ASSALE	CARTER DE PONT	ACHSGEHÄUSE	Z161
					CÁRTER DE PUENTE	CÁRTER DE PUENTE	HOUSING, AXLE	AKSELHUS	
2		221-887		2	PLUG 3/4	TAPPO	BOUCHON	STOPFEN	6400
					TAPÓN	BUJAO	PLUG	PROP	
3		292564A2		1	KNUCKLE, STEERING Right Hand				
						ARTICOLAZIONE	FUSEE	ACHSSCHENKEL	4880
					CHARNELA	ARTICULACAO DIRECAC	KNUCKLE, STEERING	KNUCKLE, STEERING	
3		292560A2		1	KNUCKLE, STEERING Left Hand				
						ARTICOLAZIONE	FUSEE	ACHSSCHENKEL	4880
					CHARNELA	ARTICULACAO DIRECAC	KNUCKLE, STEERING	KNUCKLE, STEERING	
4		235628A1		1	BUSHING	BOCCOLA	BAGUE	BUECHSE	095B
					CASQUILLO	CASQUILHO	LAGERBUS	BOESNING	
5		128647A1		1	SEAL	ANELLO DI TENUTA	JOINT	DICHTUNG	132A
					ANILLO DE CIERRE	ANEL DE VEDACAO	DICHTINGSRING	PAKNINGSRING	
6		281937A1		3	RETAINER	RITEGNO	RETENEUR	HALTEVORRICHTUNG	109R
					RETENEDOR	RETENTOR	HOUDER	HOLDER	
		368728A1		4	BEARING Inc. 7, 8	CUSCINETTO	ROULEMENT	LAGER	0600
					COJINETE	ROLAMENTO	BEARING	BEARING	
7		NSS		1	NOT SERVICED SEPARATELY Ring, Inner				
						NON FORNITO SEPARAT	NON FOURNI SEPAREMI	KEIN ERSATZTEIL	064N
					NO SE REPARA SEPARA	NOT SERVICED SEPARA	NIET ALLEEN VERKRIJG	NOT SERVICED SEPARA	
8		NSS		1	NOT SERVICED SEPARATELY Ring, Outer				
						NON FORNITO SEPARAT	NON FOURNI SEPAREMI	KEIN ERSATZTEIL	064N
					NO SE REPARA SEPARA	NOT SERVICED SEPARA	NIET ALLEEN VERKRIJG	NOT SERVICED SEPARA	
9		281939A1		4	SEAL	ANELLO DI TENUTA	JOINT	DICHTUNG	132A
					ANILLO DE CIERRE	ANEL DE VEDACAO	DICHTINGSRING	PAKNINGSRING	
10		281937A1		1	RETAINER If Equipped (Not Shown)				
						RITEGNO	RETENEUR	HALTEVORRICHTUNG	109R
					RETENEDOR	RETENTOR	HOUDER	HOLDER	
10		87440529		1	RETAINER If Equipped (Shown)				
						RITEGNO	RETENEUR	HALTEVORRICHTUNG	109R
					RETENEDOR	RETENTOR	HOUDER	HOLDER	
		313557A1		1	KIT, SHIM Inc. 11	KIT SPESSORE	JEU DE CALES	EINSTELLSCHEIBEN, SC	P688
					JUEGO DE CALCES	JUEGO DE CALCES	PACKAGE, SHIMS	KIT, AFSTANDSSTYKKE	
11		NSS		5	NOT SERVICED SEPARATELY Shim				
						NON FORNITO SEPARAT	NON FOURNI SEPAREMI	KEIN ERSATZTEIL	064N
					NO SE REPARA SEPARA	NOT SERVICED SEPARA	NIET ALLEEN VERKRIJG	NOT SERVICED SEPARA	
11		NSS		5	NOT SERVICED SEPARATELY Shim				
						NON FORNITO SEPARAT	NON FOURNI SEPAREMI	KEIN ERSATZTEIL	064N
					NO SE REPARA SEPARA	NOT SERVICED SEPARA	NIET ALLEEN VERKRIJG	NOT SERVICED SEPARA	
11		NSS		5	NOT SERVICED SEPARATELY Shim				
						NON FORNITO SEPARAT	NON FOURNI SEPAREMI	KEIN ERSATZTEIL	064N
					NO SE REPARA SEPARA	NOT SERVICED SEPARA	NIET ALLEEN VERKRIJG	NOT SERVICED SEPARA	
11		NSS		5	NOT SERVICED SEPARATELY Shim				
						NON FORNITO SEPARAT	NON FOURNI SEPAREMI	KEIN ERSATZTEIL	064N
					NO SE REPARA SEPARA	NOT SERVICED SEPARA	NIET ALLEEN VERKRIJG	NOT SERVICED SEPARA	

05-15		p2	11/04

MFD AXLE HOUSING ASSEMBLY - SUSPENDED WITH 12 BOLT HUB, WITH DIFFERENTIAL LOCK
GRUPPO DELL'ALLOGGIAMENTO DELL'ASSALE MFD - SOSPESO CON MOZZO A 12 BULLONI
CARTER D'ESSIEU DU PONT AVANT SUSPENDU AVEC MOYEU À 12 BOULONS, AVEC BLOCAGE DE DIFFÉRENTIEL
ALLRADANTRIEBS-ACHSGEHÄUSE - GEFEDERT MIT 12 NABENSCHRAUBEN MIT DIFFERENTIALSPERRE

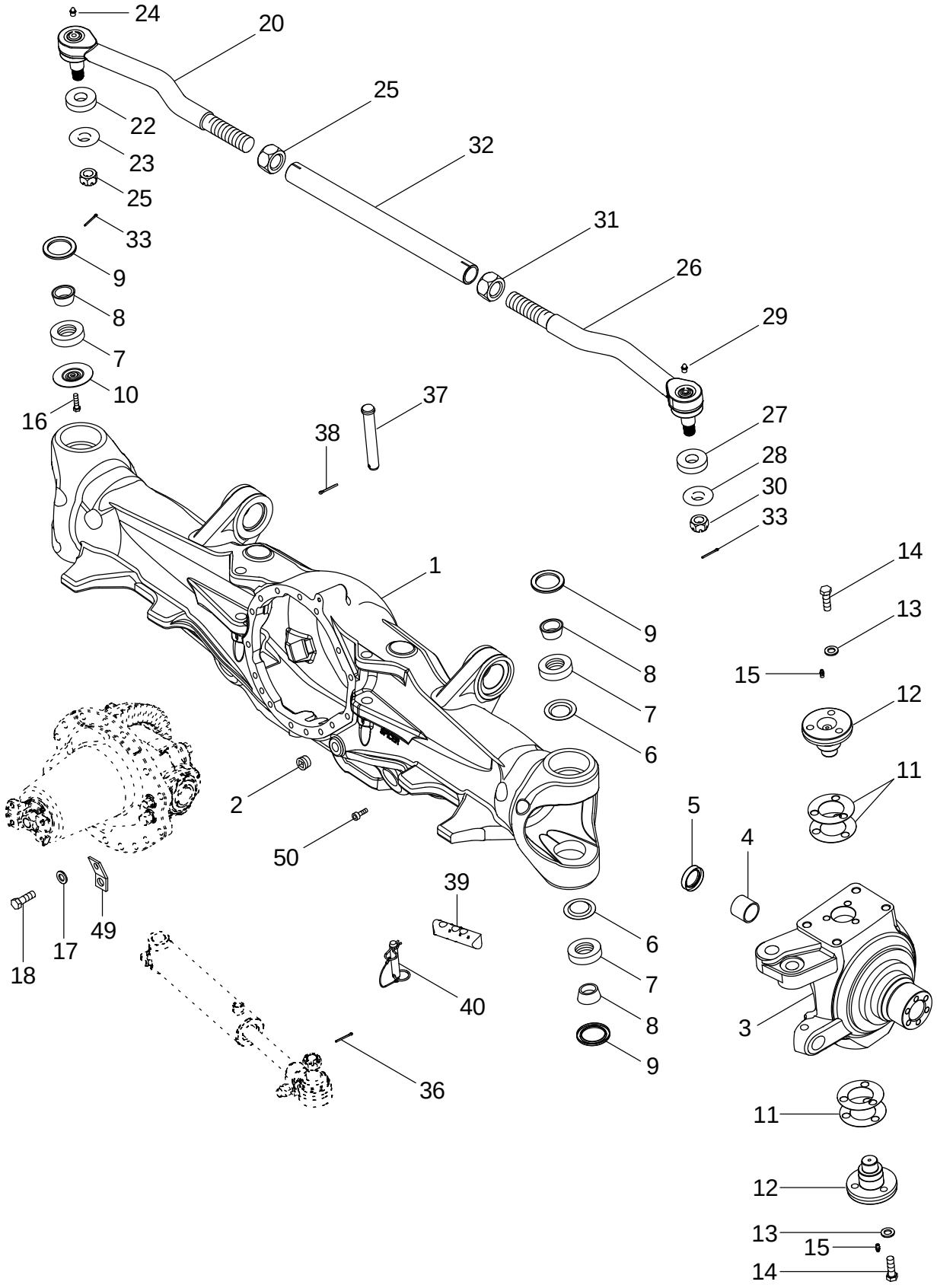

CONJUNTO DEL ALOJAMIENTO DEL EJE DE LA TDM - SUSPENDIDO CON CUBO DE 12 PERNOS
CONJUNTO DA ESTRUTURA DO EIXO DA TMD - SUSPENSO, COM CUBO DE 12 PARAFUSOS, COM TRANCA DO DIFERENCIAL
MFD-ASBEHUIZING - BEWEEGBAAR OPGEHANGEN MET NAAF MET 12 BOUTEN , MET DIFFERENTIEELVERGRENDELING
MFD AKSELHUSSAMLING - OPHÆNGT MED 12 BOLTNAV, MED DIFFERENTIALESPÆRRE

R	N	P.N.	MOD	Q	Description Denominacion	Descrizione Denominação	Description Beschrijving	Bezeichnung Beskrivelse	L.C.
11		NSS		5	NOT SERVICED SEPARATELY Shim				
						NON FORNITO SEPARAT	NON FOURNI SEPAREMI	KEIN ERSATZTEIL	064N
					NO SE REPARA SEPARA	NOT SERVICED SEPARA	NIET ALLEEN VERKRIJG	NOT SERVICED SEPARA	
11		NSS		5	NOT SERVICED SEPARATELY Shim				
						NON FORNITO SEPARAT	NON FOURNI SEPAREMI	KEIN ERSATZTEIL	064N
					NO SE REPARA SEPARA	NOT SERVICED SEPARA	NIET ALLEEN VERKRIJG	NOT SERVICED SEPARA	
12		378410A1		4	CAP	TAPPO SERBATOIO	CHAPEAU	KAPPE	052T
					TAPON DEL DEPOSITO	TAMPAO DE RESERVAT	RESERVOIRDOP	TANKDAEKSEL	
13		896-11014		12	WASHER 15,5 x 28 x 3 mm	ROSETTA PIANA	RONDELLE	SCHEIBE	9720
					ARANDELA	ANILHA	SLUITRING	FLADSKIVE	
14		627-14045		12	SCREW M14 x 45; 10,9	VITE	VIS	SCHRAUBE	7450
					TORNILLO	PARAFUSO	SCHROEF	SKRUE	
15		219-1		4	NIPPLE, LUBE 1/8 PT x 21/32				
						INGRASSATORE	GRAISSEUR	SCHMIERNIPPEL	060I
					ENGRASADOR	LUBRIFICADOR	SMEERNIPPEL	SMØRENIPPEL	
16		86977726		1	SCREW M6 x 12; 8.8, If Equipped				
						VITE	VIS	SCHRAUBE	040V
					TORNILLO	PARAFUSO	SCHROEF	SKRUE	
17		896-11014		16	WASHER 15,5 x 28 x 3 mm	ROSETTA PIANA	RONDELLE	SCHEIBE	9720
					ARANDELA	ANILHA	SLUITRING	FLADSKIVE	
18		627-14045		16	SCREW M14 x 45; 10,9	VITE	VIS	SCHRAUBE	7450
					TORNILLO	PARAFUSO	SCHROEF	SKRUE	
20		311169A2	a	1	BALL JOINT Left Hand Threads, Inc. 21 - 24				
						GIUNTO SFERICO	ROTULE	KUGELGELENK	070G
					JUNTA DE ROTULA	JUNTA ESFÉRICA	KOGELGEWRICHT	KUGLELED	
20		87455742	b	1	BALL JOINT Left Hand Threads, Inc. 21 - 24				
						GIUNTO SFERICO	ROTULE	KUGELGELENK	070G
					JUNTA DE ROTULA	JUNTA ESFÉRICA	KOGELGEWRICHT	KUGLELED	
		333617A1	a	1	KIT, GASKET Inc. 21, 22	CONFEZIONE, GUARNIZ	JEU JOINTS ETANCHEIT	DICHTUNGSSATZ	3740
					EMPAQUE DE JUNTAS	JOGO DE JUNTAS	KIT, GASKET	PAKNINGS PAKKE	
		87455748	b	1	KIT Inc. 21, 22	CORREDO	KIT	SATZ	305C
					EQUIPO	KIT	KIT	UDSTYR	
21		NSS		1	NOT SERVICED SEPARATELY Boot				
						NON FORNITO SEPARAT	NON FOURNI SEPAREMI	KEIN ERSATZTEIL	064N
					NO SE REPARA SEPARA	NOT SERVICED SEPARA	NIET ALLEEN VERKRIJG	NOT SERVICED SEPARA	
22		NSS		1	NOT SERVICED SEPARATELY Spacer				
						NON FORNITO SEPARAT	NON FOURNI SEPAREMI	KEIN ERSATZTEIL	064N
					NO SE REPARA SEPARA	NOT SERVICED SEPARA	NIET ALLEEN VERKRIJG	NOT SERVICED SEPARA	
23		429-1314	a	1	SLOTTED NUT 7/8 NF; 8	DADO SCANALATO	ECROU A ENCOCHES	SCHLITZMUTTER	Z477
					TUERCA ENTALLADA	PORCA ENTALHADA	SLOTTED NUT	KÆRVMØTRIK	
23		87455806	b	1	SLOTTED NUT M22	DADO SCANALATO	ECROU A ENCOCHES	SCHLITZMUTTER	Z477
					TUERCA ENTALLADA	PORCA ENTALHADA	SLOTTED NUT	KÆRVMØTRIK	
24		219-6	a	1	FITTING Grease 1/4 str	RACCORDO	RACCORD	ANSCHLUSSSTÜCK	3300
					CONEXION	CONEXAO	FITTING	FITTING	
24		87455807	b	1	FITTING Grease	RACCORDO	RACCORD	ANSCHLUSSSTÜCK	3300
					CONEXION	CONEXAO	FITTING	FITTING	

(a) BSN FUSA6400017
(b) ASN FUSA6400017

05-15		p3	11/04

MFD AXLE HOUSING ASSEMBLY - SUSPENDED WITH 12 BOLT HUB, WITH DIFFERENTIAL LOCK
GRUPPO DELL'ALLOGGIAMENTO DELL'ASSALE MFD - SOSPESO CON MOZZO A 12 BULLONI
CARTER D'ESSIEU DU PONT AVANT SUSPENDU AVEC MOYEU À 12 BOULONS, AVEC BLOCAGE DE DIFFÉRENTIEL
ALLRADANTRIEBS-ACHSGEHÄUSE - GEFEDERT MIT 12 NABENSCHRAUBEN MIT DIFFERENTIALSPERRE

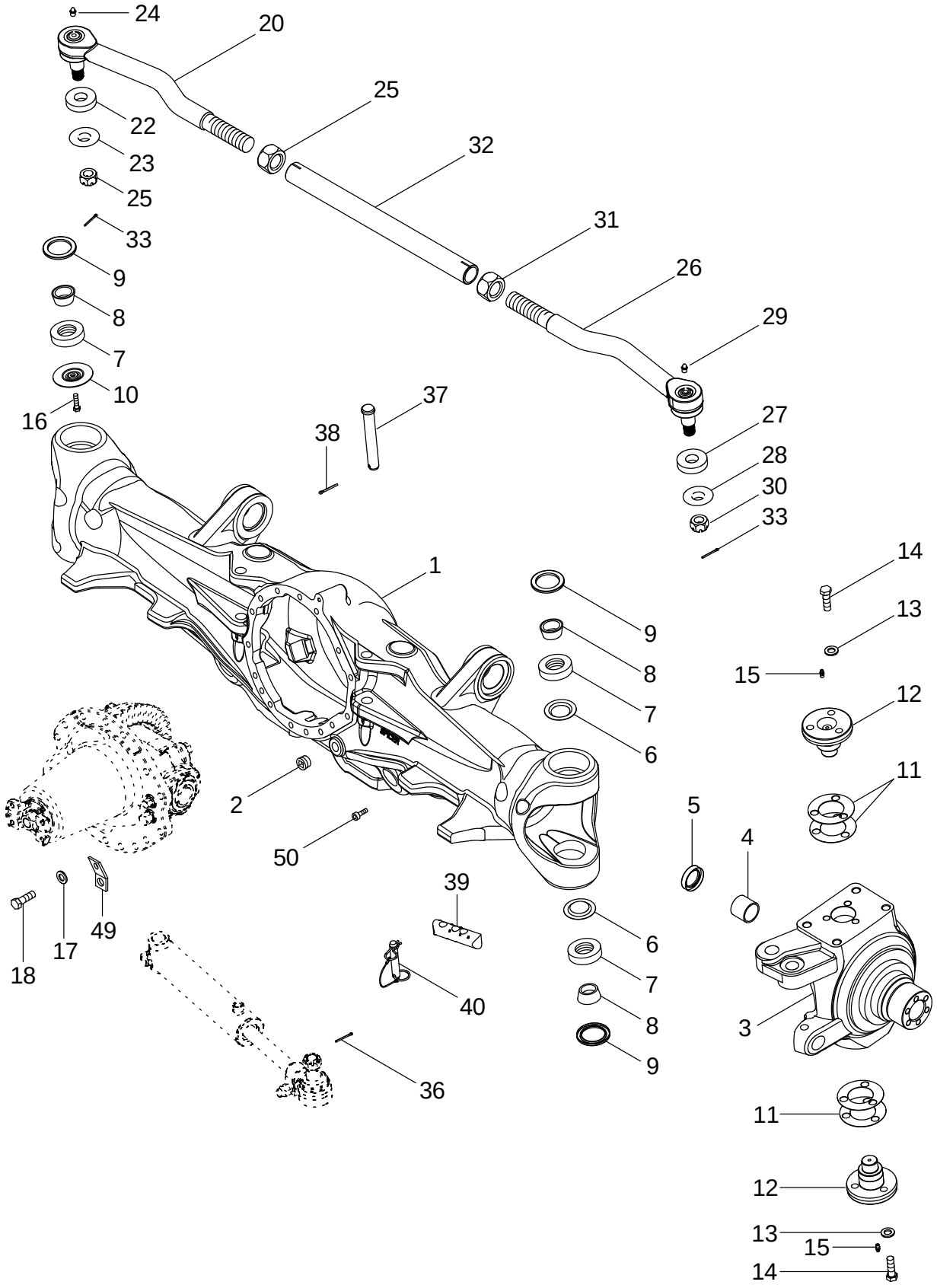

CONJUNTO DEL ALOJAMIENTO DEL EJE DE LA TDM - SUSPENDIDO CON CUBO DE 12 PERNOS
CONJUNTO DA ESTRUTURA DO EIXO DA TMD - SUSPENSO, COM CUBO DE 12 PARAFUSOS, COM TRANCA DO DIFERENCIAL
MFD-ASBEHUIZING - BEWEEGBAAR OPGEHANGEN MET NAAF MET 12 BOUTEN , MET DIFFERENTIEELVERGRENDELING
MFD AKSELHUSSAMLING - OPHÆNGT MED 12 BOLTNAV, MED DIFFERENTIALESPÆRRE

R	N	P.N.	MOD	Q	Description Denominacion	Descrizione Denominação	Description Beschrijving	Bezeichnung Beskrivelse	L.C.
25		311168A1	a	1	NUT 1-1/2, Left Hand Threads				
						DADO	ECROU	MUTTER	010D
					TUERCA	PORCA	MOER	MØTRIK	
25		87455741	b	1	NUT M38, Left Hand Threads				
						DADO	ECROU	MUTTER	010D
					TUERCA	PORCA	MOER	MØTRIK	
26		311170A2	a	1	BALL JOINT Right Hand Threads, Inc. 27 - 30				
						GIUNTO SFERICO	ROTULE	KUGELGELENK	070G
					JUNTA DE ROTULA	JUNTA ESFÉRICA	KOGELGEWRICHT	KUGLELED	
26		87455743	b	1	BALL JOINT Right Hand Threads, Inc. 27 - 30				
						GIUNTO SFERICO	ROTULE	KUGELGELENK	070G
					JUNTA DE ROTULA	JUNTA ESFÉRICA	KOGELGEWRICHT	KUGLELED	
		333617A1	a	1	KIT, GASKET Inc. 27, 28	CONFEZIONE, GUARNIZ	JEU JOINTS ETANCHEIT	DICHTUNGSSATZ	3740
					EMPAQUE DE JUNTAS	JOGO DE JUNTAS	KIT, GASKET	PAKNINGS PAKKE	
		87455748	b	1	KIT Inc. 27, 28	CORREDO	KIT	SATZ	305C
					EQUIPO	KIT	KIT	UDSTYR	
27		NSS		1	NOT SERVICED SEPARATELY Boot				
						NON FORNITO SEPARAT	NON FOURNI SEPAREMI	KEIN ERSATZTEIL	064N
					NO SE REPARA SEPARA	NOT SERVICED SEPARA	NIET ALLEEN VERKRIJG	NOT SERVICED SEPARA	
28		NSS		1	NOT SERVICED SEPARATELY Spacer				
						NON FORNITO SEPARAT	NON FOURNI SEPAREMI	KEIN ERSATZTEIL	064N
					NO SE REPARA SEPARA	NOT SERVICED SEPARA	NIET ALLEEN VERKRIJG	NOT SERVICED SEPARA	
29		219-6	a	1	FITTING Grease 1/4 str	RACCORDO	RACCORD	ANSCHLUSSSTÜCK	3300
					CONEXION	CONEXAO	FITTING	FITTING	
29		87455807	b	1	FITTING Grease	RACCORDO	RACCORD	ANSCHLUSSSTÜCK	3300
					CONEXION	CONEXAO	FITTING	FITTING	
30		429-1314	a	1	SLOTTED NUT 7/8 NF; 8	DADO SCANALATO	ECROU A ENCOCHES	SCHLITZMUTTER	Z477
					TUERCA ENTALLADA	PORCA ENTALHADA	SLOTTED NUT	KÆRVMØTRIK	
30		87455806	b	1	SLOTTED NUT M22	DADO SCANALATO	ECROU A ENCOCHES	SCHLITZMUTTER	Z477
					TUERCA ENTALLADA	PORCA ENTALHADA	SLOTTED NUT	KÆRVMØTRIK	
31		311167A1	a	1	NUT 1-1/2, Right Hand Threads				
						DADO	ECROU	MUTTER	010D
					TUERCA	PORCA	MOER	MØTRIK	
31		87455739	b	1	NUT M38, Right Hand Threads				
						DADO	ECROU	MUTTER	010D
					TUERCA	PORCA	MOER	MØTRIK	
32		311166A1	a	1	TUBE	TUBETTO	TUBE	SCHLAUCH	195T
					TUBO	TUBO	BUISJE	RØR	
32		87455737	b	1	TUBE	TUBETTO	TUBE	SCHLAUCH	195T
					TUBO	TUBO	BUISJE	RØR	
33		432-820		2	PIN, SPLIT (COTTER) 1/8 x 1-1/4				
						COPPIGLIA	GOUPILLE	SPLINT	270C
					PASADOR ABIERTO	TROCO DE ABRIR	SPLITPEN	SPLITBOLT	
36		432-820		2	PIN, SPLIT (COTTER) 1/8 x 1-1/4				
						COPPIGLIA	GOUPILLE	SPLINT	270C
					PASADOR ABIERTO	TROCO DE ABRIR	SPLITPEN	SPLITBOLT	

(a) BSN FUSA6400017
(b) ASN FUSA6400017

05-15		p4	11/04

MFD AXLE HOUSING ASSEMBLY - SUSPENDED WITH 12 BOLT HUB, WITH DIFFERENTIAL LOCK
GRUPPO DELL'ALLOGGIAMENTO DELL'ASSALE MFD - SOSPESO CON MOZZO A 12 BULLONI
CARTER D'ESSIEU DU PONT AVANT SUSPENDU AVEC MOYEU À 12 BOULONS, AVEC BLOCAGE DE DIFFÉRENTIEL
ALLRADANTRIEBS-ACHSGEHÄUSE - GEFEDERT MIT 12 NABENSCHRAUBEN MIT DIFFERENTIALSPERRE

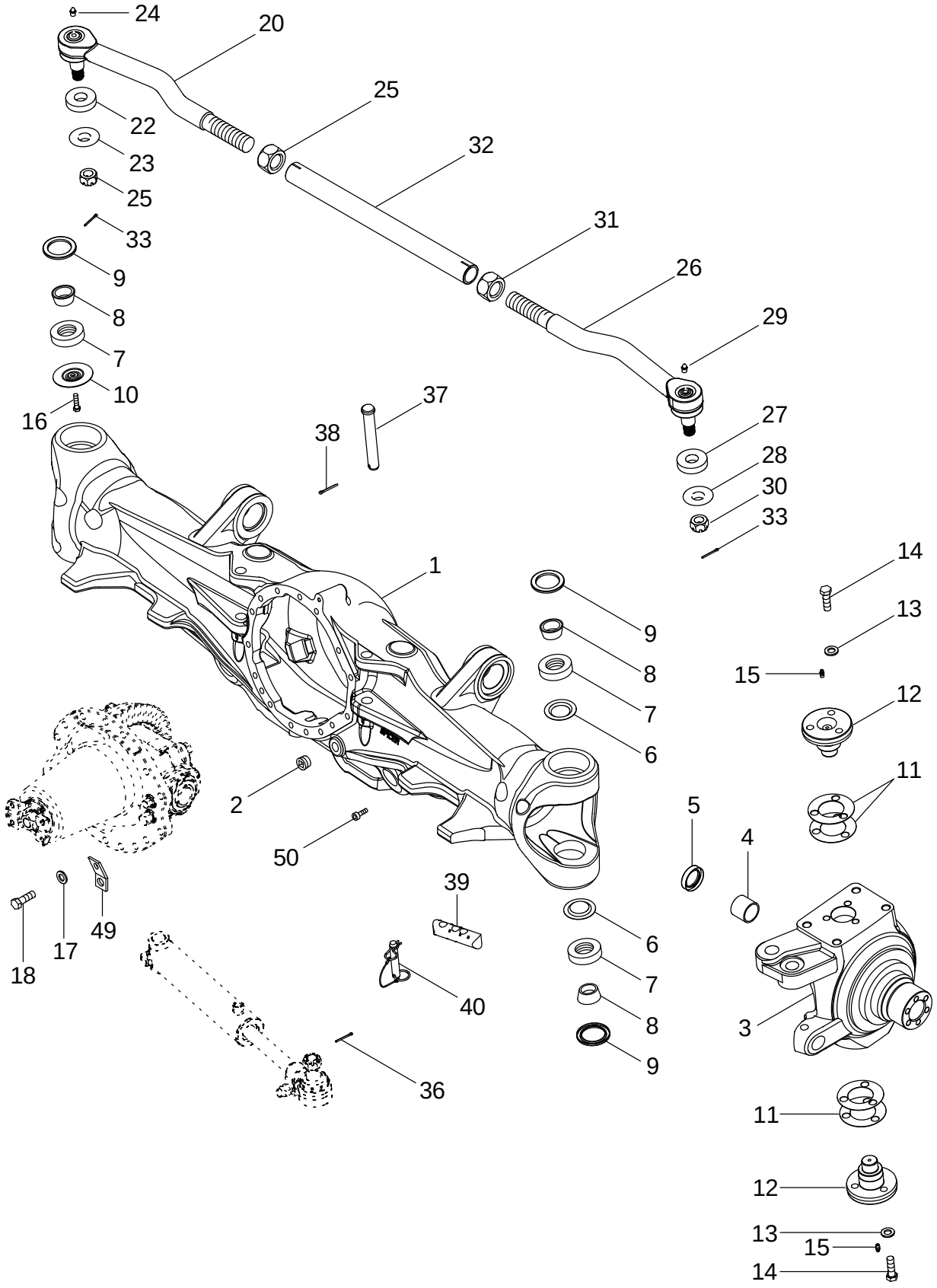

CONJUNTO DEL ALOJAMIENTO DEL EJE DE LA TDM - SUSPENDIDO CON CUBO DE 12 PERNOS
CONJUNTO DA ESTRUTURA DO EIXO DA TMD - SUSPENSO, COM CUBO DE 12 PARAFUSOS, COM TRANCA DO DIFERENCIAL
MFD-ASBEHUIZING - BEWEEGBAAR OPGEHANGEN MET NAAF MET 12 BOUTEN , MET DIFFERENTIEELVERGRENDELING
MFD AKSELHUSSAMLING - OPHÆNGT MED 12 BOLTNAV, MED DIFFERENTIALESPÆRRE

R	N	P.N.	MOD	Q	Description Denominacion	Descrizione Denominação	Description Beschrijving	Bezeichnung Beskrivelse	L.C.
37		87406480		2	PIN PERNO	PERNO PERNO	AXE PEN	BOLZEN STIFT	080P
38		733-4032		2	PIN, SPLIT (COTTER) 4 x 32 mm PASADOR ABIERTO	COPPIGLIA TROCO DE ABRIR	GOUPILLE SPLITPEN	SPLINT SPLITBOLT	270C
39		281914A1		2	ROD Steering Stop, Short, 3 Hole (Shown) VARILLA	ASTA HASTE	TRINGLE STANG	STANGE STANG	090A
39		451995A1		2	ROD, ADJUSTMENT Steering Stop, Long, 4 Hole (Not Shown) VARILLA DE REGLAJE	ASTA DI REGOLAZIONE TIRANTE DE AFINACAO	TRINGLE DE RÉGLAGE REGELBARE STANG	EINSTELLSTANGE JUSTERSTANG	088A
40		87404993		2	PIN, AXLE PIVOTE DE EJE	PERNO DELL'ASSALE PIVOTE DE EJE	PIVOT D'ESSIEU PIN, AXLE	ACHSBOLZEN AKSELPIND	Z160
49		352782A1		1	STRAP BANDA	BANDELLA BANDA	SANGLE RIEM	GURT STROP	532B
50		863-8020		2	SCREW M8 x 20; 12.9 TORNILLO	VITE PARAFUSO	VIS SCHROEF	SCHRAUBE SKRUE	7450

05-16		p1	11/04

FRONT AXLE DRIVE SHAFT - MFD, WITHOUT DIFFERENTIAL LOCK
SEMIASSE ANTERIORE - MFD, SENZA BLOCCAGGIO DEL DIFFERENZIALE
ARBRE D'ENTRAÎNEMENT DE L'ESSIEU AVANT DU PONT AVANT, SANS BLOCAGE DU DIFFÉRENTIEL
VORDERACHSEN-ANTRIEBSWELLE - ALLRADANTRIEB, OHNE DIFFERENTIALSPERRE

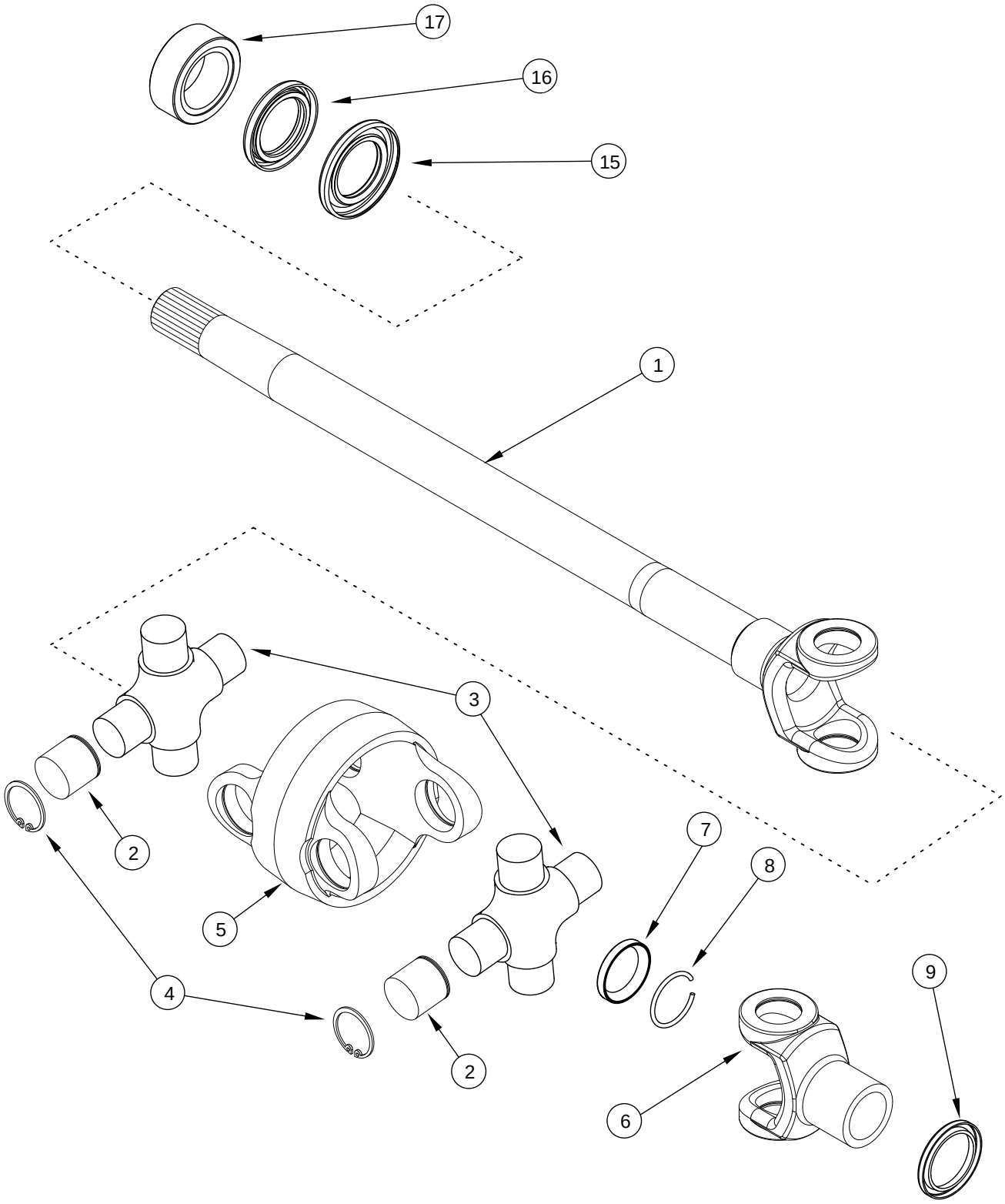

ÁRBOL DE TRANSMISIÓN DEL EJE DELANTERO - TDM, SIN BLOQUEO DEL DIFERENCIAL
EIXO DE TRANSMISSÃO DO EIXO DIANTEIRO - TMD, SEM TRANCA DO DIFERENCIAL
AANDRIJFAS VOORAS - MFD, ZONDER DIFFERENTIEELVERGRENDELING
FORRESTE DRIVAKSEL - MFD, UDEN DIFFERENTIALESPÆRRE

R	N	P.N.	MOD	Q	Description Denominacion	Descrizione Denominação	Description Beschrijving	Bezeichnung Beskrivelse	L.C.
		395734A1		1	AXLE-SHAFT Right Hand, Shown, Inc. 1 - 9				
						SEMIALBERO	DEMI-ARBRE	ACHSWELLE	092S
					SEMIEJE	SEMIEIXO	DRAAGAS	BAGAKSEL	
		395735A1		1	AXLE Left Hand, Inc. 1 - 9	ASSALE	ESSIEU	ACHSE	087A
					EJE	EIXO	AS	AKSEL	
1		395741A1		1	SHAFT, LONG Right Hand	ALBERO, LUNGO	ARBRE LONG	WELLE, LANG	P687
					ARBOL LARGO	EIXO LONGO	SHAFT, LONG	LANG AKSEL	
1		395743A1		1	SHAFT, LONG Left Hand	ALBERO, LUNGO	ARBRE LONG	WELLE, LANG	P687
					ARBOL LARGO	EIXO LONGO	SHAFT, LONG	LANG AKSEL	
		395738A1		2	KIT, FIP Inc. 2 - 4	KIT DI REVISIONE	KIT DE REVISION	SERVICESATZ	023K
					KIT DE REVISION	KIT REVISAO	KIT, FIP	OPGRADERINGS SAET	
2		NSS		4	NOT SERVICED SEPARATELY Cup				
						NON FORNITO SEPARAT	NON FOURNI SEPAREMI	KEIN ERSATZTEIL	064N
					NO SE REPARA SEPARA	NOT SERVICED SEPARA	NIET ALLEEN VERKRIJG	NOT SERVICED SEPARA	
3		NSS		1	NOT SERVICED SEPARATELY Joint, Universal				
						NON FORNITO SEPARAT	NON FOURNI SEPAREMI	KEIN ERSATZTEIL	064N
					NO SE REPARA SEPARA	NOT SERVICED SEPARA	NIET ALLEEN VERKRIJG	NOT SERVICED SEPARA	
4		NSS		4	NOT SERVICED SEPARATELY Ring, Retaining				
						NON FORNITO SEPARAT	NON FOURNI SEPAREMI	KEIN ERSATZTEIL	064N
					NO SE REPARA SEPARA	NOT SERVICED SEPARA	NIET ALLEEN VERKRIJG	NOT SERVICED SEPARA	
5		395740A1		1	YOKE	FORCELLA	MACHOIRE	GABEL	085F
					HORQUILLA	GARFO	VORK	KRAFTOVERFOERINGSC	
6		395737A1		1	YOKE Inc. 7 - 9	FORCELLA	MACHOIRE	GABEL	085F
					HORQUILLA	GARFO	VORK	KRAFTOVERFOERINGSC	
7		1961753C1		1	SEAL	ANELLO DI TENUTA	JOINT	DICHTUNG	132A
					ANILLO DE CIERRE	ANEL DE VEDACAO	DICHTINGSRING	PAKNINGSRING	
8		1277405C1		1	RING	ANELLO	ANNEAU	RING	045A
					ANILLO	ANEL	RING	RING	
9		1287608C1		1	SEAL	ANELLO DI TENUTA	JOINT	DICHTUNG	132A
					ANILLO DE CIERRE	ANEL DE VEDACAO	DICHTINGSRING	PAKNINGSRING	
15		302957A1		2	SEAL, OIL	PARAOLIO	JOINT D'HUILE	ÖLDICHTUNG	P278
					JUNTA DE ACEITE	VEDADOR DE OLEO	OIL-SEAL	OLIESEGL	
16		302956A1		2	SEAL, OIL	PARAOLIO	JOINT D'HUILE	ÖLDICHTUNG	P278
					JUNTA DE ACEITE	VEDADOR DE OLEO	OIL-SEAL	OLIESEGL	
17		302958A1		2	BUSHING, LARGE	ANELLO	BAGUE	BUCHSE, GROSS	Z312
					CASQUILLO	BUCHA	BUSHING, LARGE	BUSHING, LARGE	

05-17		p1	11/04

FRONT AXLE DRIVE SHAFT - MFD, WITH DIFFERENTIAL LOCK
SEMIASSE ANTERIORE - MFD, CON BLOCCAGGIO DEL DIFFERENZIALE
ARBRE D'ENTRAÎNEMENT DE L'ESSIEU AVANT DU PONT AVANT, AVEC BLOCAGE DU DIFFÉRENTIEL
VORDERACHSEN-ANTRIEBSWELLE - ALLRADANTRIEB, MIT DIFFERENTIALSPERRE

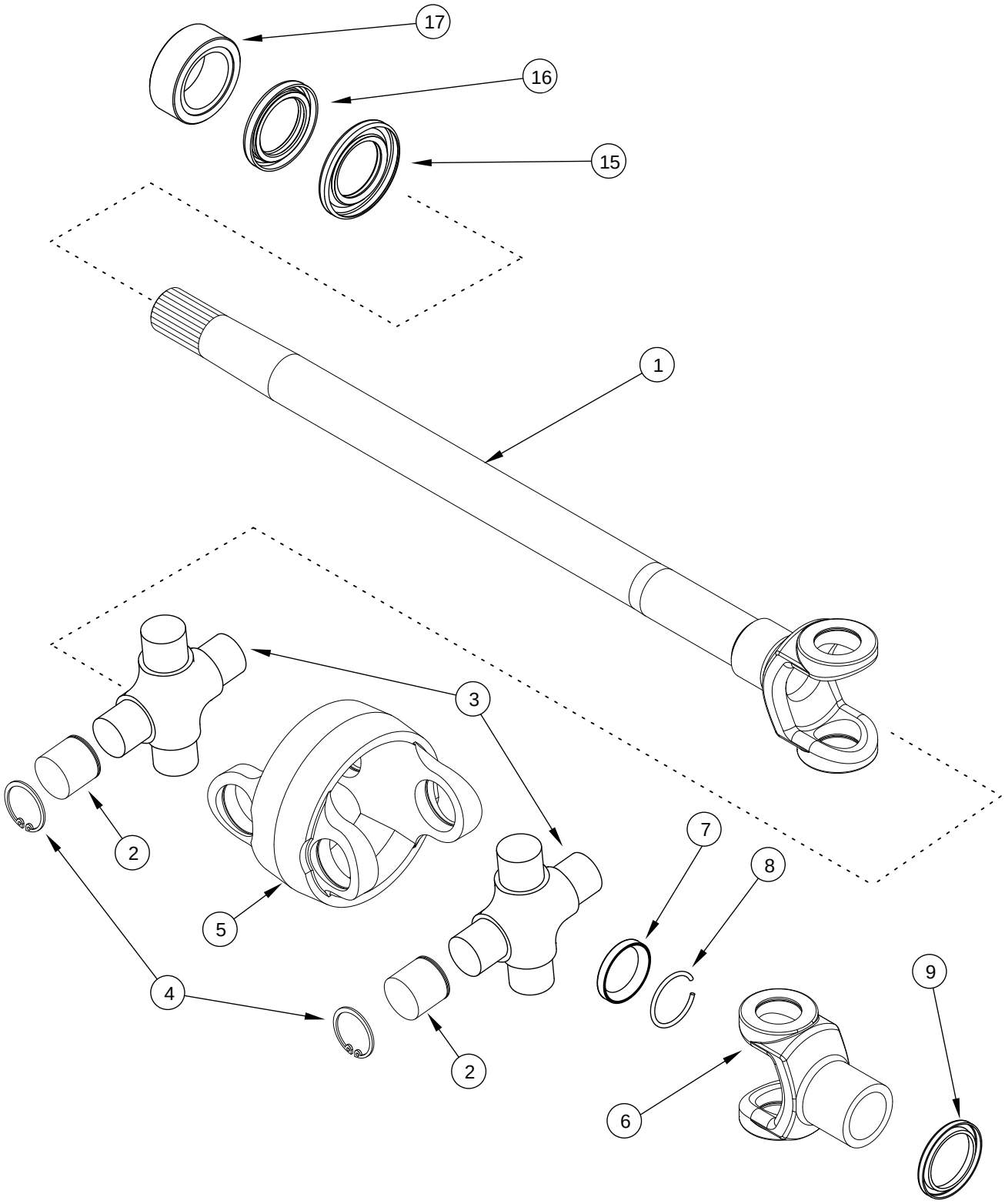

ÁRBOL DE TRANSMISIÓN DEL EJE DELANTERO - TDM, CON BLOQUEO DEL DIFERENCIAL
EIXO DE TRANSMISSÃO DO EIXO DIANTEIRO - TMD, COM TRANCA DO DIFERENCIAL
AANDRIJFAS VOORAS - MFD, MET DIFFERENTIEELVERGRENDELING
FORRESTE DRIVAKSEL - MFD, MED DIFFERENTIALESPÆRRE

R	N	P.N.	MOD	Q	Description Denominacion	Descrizione Denominação	Description Beschrijving	Bezeichnung Beskrivelse	L.C.
		87404999		1	AXLE-SHAFT, ARTICULATED Right Hand, Shown, Inc. 1 - 9				
						SEMIALBERO SNODATO	DEMI-ARBRE ARTICULE	GELENKWELLENSTÜCK	093S
					SEMIEJE ARTICULADO	SEMIEIXO ARTICULADO	SCHNARNIERRENDE DR	LEDDELT AKSEL	
		87405000		1	AXLE-SHAFT, ARTICULATED Left Hand, Inc. 1 - 9				
						SEMIALBERO SNODATO	DEMI-ARBRE ARTICULE	GELENKWELLENSTÜCK	093S
					SEMIEJE ARTICULADO	SEMIEIXO ARTICULADO	SCHNARNIERRENDE DR	LEDDELT AKSEL	
1		**87405212**		1	SHAFT, LONG Right Hand	ALBERO, LUNGO	ARBRE LONG	WELLE, LANG	P687
					ARBOL LARGO	EIXO LONGO	SHAFT, LONG	LANG AKSEL	
1		**87405211**		1	SHAFT, LONG Left Hand	ALBERO, LUNGO	ARBRE LONG	WELLE, LANG	P687
					ARBOL LARGO	EIXO LONGO	SHAFT, LONG	LANG AKSEL	
		395738A1		2	KIT, FIP Inc. 2 - 4	KIT DI REVISIONE	KIT DE REVISION	SERVICESATZ	023K
					KIT DE REVISION	KIT REVISAO	KIT, FIP	OPGRADERINGS SAET	
2		**NSS**		4	NOT SERVICED SEPARATELY Cup				
						NON FORNITO SEPARAT	NON FOURNI SEPAREMI	KEIN ERSATZTEIL	064N
					NO SE REPARA SEPARA	NOT SERVICED SEPARA	NIET ALLEEN VERKRIJG	NOT SERVICED SEPARA	
3		**NSS**		1	NOT SERVICED SEPARATELY Joint, Universal				
						NON FORNITO SEPARAT	NON FOURNI SEPAREMI	KEIN ERSATZTEIL	064N
					NO SE REPARA SEPARA	NOT SERVICED SEPARA	NIET ALLEEN VERKRIJG	NOT SERVICED SEPARA	
4		**NSS**		4	NOT SERVICED SEPARATELY Ring, Retaining				
						NON FORNITO SEPARAT	NON FOURNI SEPAREMI	KEIN ERSATZTEIL	064N
					NO SE REPARA SEPARA	NOT SERVICED SEPARA	NIET ALLEEN VERKRIJG	NOT SERVICED SEPARA	
5		**395740A1**		1	YOKE	FORCELLA	MACHOIRE	GABEL	085F
					HORQUILLA	GARFO	VORK	KRAFTOVERFOERINGSC	
6		**395737A1**		1	YOKE Inc. 7 - 9	FORCELLA	MACHOIRE	GABEL	085F
					HORQUILLA	GARFO	VORK	KRAFTOVERFOERINGSC	
7		**1961753C1**		1	SEAL	ANELLO DI TENUTA	JOINT	DICHTUNG	132A
					ANILLO DE CIERRE	ANEL DE VEDACAO	DICHTINGSRING	PAKNINGSRING	
8		**1277405C1**		1	RING	ANELLO	ANNEAU	RING	045A
					ANILLO	ANEL	RING	RING	
9		**1287608C1**		1	SEAL	ANELLO DI TENUTA	JOINT	DICHTUNG	132A
					ANILLO DE CIERRE	ANEL DE VEDACAO	DICHTINGSRING	PAKNINGSRING	
15		**302957A1**		2	SEAL, OIL	PARAOLIO	JOINT D'HUILE	ÖLDICHTUNG	P278
					JUNTA DE ACEITE	VEDADOR DE OLEO	OIL-SEAL	OLIESEGL	
16		**302956A1**		2	SEAL, OIL	PARAOLIO	JOINT D'HUILE	ÖLDICHTUNG	P278
					JUNTA DE ACEITE	VEDADOR DE OLEO	OIL-SEAL	OLIESEGL	
17		**302958A1**		2	BUSHING, LARGE	ANELLO	BAGUE	BUCHSE, GROSS	Z312
					CASQUILLO	BUCHA	BUSHING, LARGE	BUSHING, LARGE	

05-18		p1	11/04

CARRIER AND DIFFERENTIAL - MFD, 10 BOLT HUB, WITHOUT DIFFERENTIAL LOCK
SUPPORTO E DIFFERENZIALE - MFD, MOZZO A 10 BULLONI, SENZA BLOCCAGGIO DEL DIFFERENZIALE
DIFFÉRENTIEL ET BOÎTIER DU DIFFÉRENTIEL DU PONT AVANT, MOYEU À 10 BOULONS, SANS BLOCAGE DU DIFFÉRENT
TRÄGER UND DIFFERENTIAL - ALLRADANTRIEB MIT 10 NABENSCHRAUBEN OHNE DIFFERENTIALSPERRE

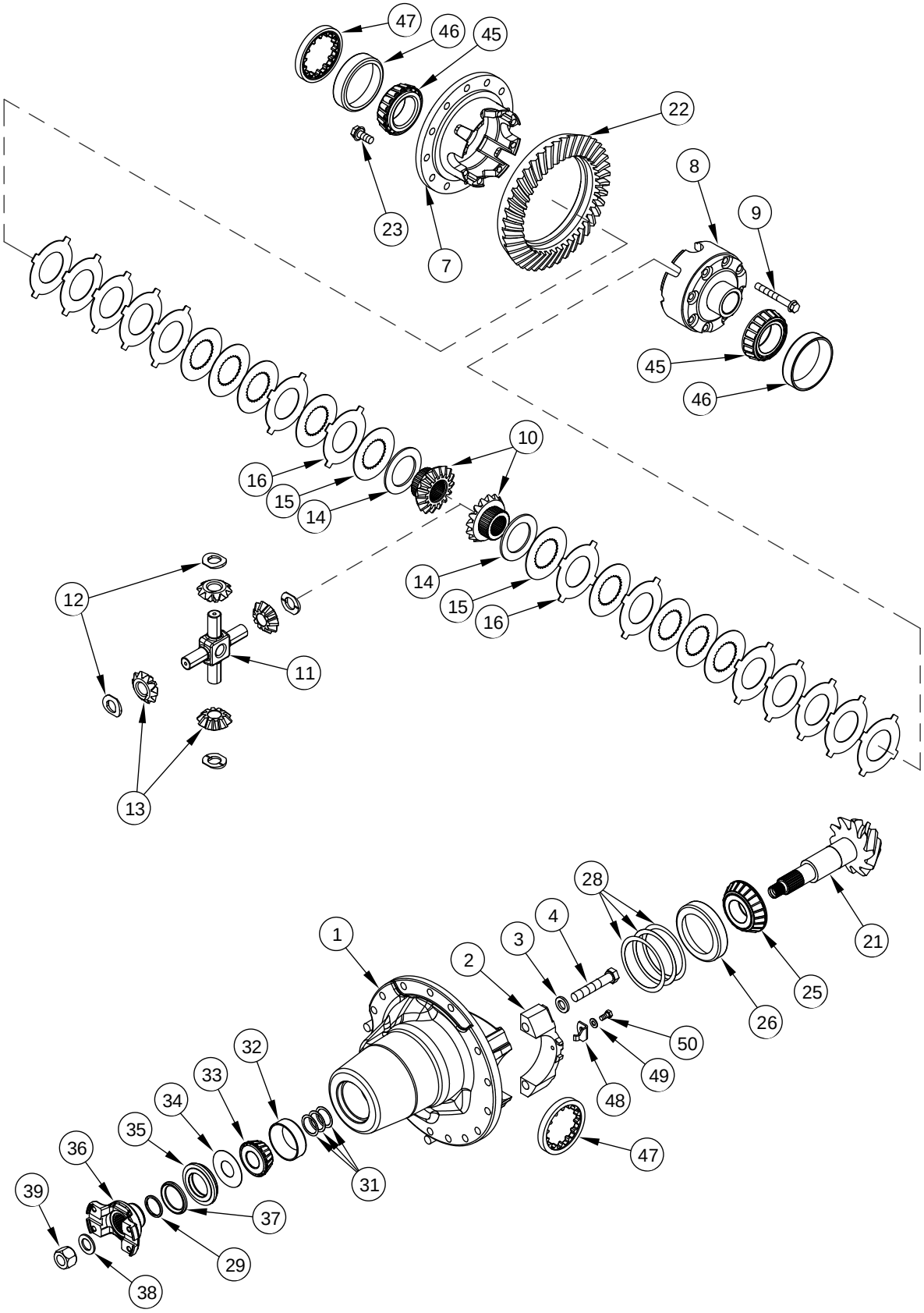

PORTADOR Y DIFERENCIAL - TDM, CUBO DE 10 PERNOS, SIN BLOQUEO DEL DIFERENCIAL
CARREGADOR E DIFERENCIAL - TMD, CUBO DE 10 PARAFUSOS, SEM TRANCA DO DIFERENCIAL
STEUNRING EN DIFFERENTIEEL - MFD, NAAF MET 10 BOUTEN , ZONDER DIFFERENTIEELVERGRENDELING
BÆRER OG DIFFERENTIALE - MFD, 10 BOLTNAV, UDEN DIFFERENTIALESPÆRRE

R	N	P.N.	MOD	Q	Description Denominacion	Descrizione Denominação	Description Beschrijving	Bezeichnung Beskrivelse	L.C.
		87404055		1	CARRIER Inc. 1 - 50 EJE DE SATELITES	PORTASATELLITI PORTA-SATELITES	PILIER, SOUTIEN SATELIETDRAGER	PLANETENTRÄGER SPIDSHJULSHOLDER	196P
1		87404057		1	CARRIER Inc. 2 - 4 EJE DE SATELITES	PORTASATELLITI PORTA-SATELITES	PILIER, SOUTIEN SATELIETDRAGER	PLANETENTRÄGER SPIDSHJULSHOLDER	196P
2		NSS		2	NOT SERVICED SEPARATELY Cap NO SE REPARA SEPARA	NON FORNITO SEPARAT NOT SERVICED SEPARA	NON FOURNI SEPAREMI NIET ALLEEN VERKRIJG	KEIN ERSATZTEIL NOT SERVICED SEPARA	064N
3		896-12016		4	WASHER 17,5 x 30 x 4 mm ARANDELA	ROSETTA PIANA ANILHA	RONDELLE SLUITRING	SCHEIBE FLADSKIVE	9720
4		828-16090		4	SCREW M16 x 90; 10.9 TORNILLO	VITE PARAFUSO	VIS SCHROEF	SCHRAUBE SKRUE	7450
		345688A4		1	DIFFERENTIAL Inc. 7 - 16 DIFERENCIAL	DIFFERENZIALE DIFERENCIAL	DIFFÉRENTIEL DIFFERENTIEEL	DIFFERENTIALGETRIEBI DIFFERENTIALE	040D
7		NSS		1	NOT SERVICED SEPARATELY Housing NO SE REPARA SEPARA	NON FORNITO SEPARAT NOT SERVICED SEPARA	NON FOURNI SEPAREMI NIET ALLEEN VERKRIJG	KEIN ERSATZTEIL NOT SERVICED SEPARA	064N
8		NSS		1	NOT SERVICED SEPARATELY Housing NO SE REPARA SEPARA	NON FORNITO SEPARAT NOT SERVICED SEPARA	NON FOURNI SEPAREMI NIET ALLEEN VERKRIJG	KEIN ERSATZTEIL NOT SERVICED SEPARA	064N
9		1997853C1		8	BOLT TORNILLO	BULLONE PARAFUSO	BOULON BOUT	SCHAUBENBOLZEN SKRUE	140B
		377176A3		1	KIT Inc. 10 - 16 EQUIPO	CORREDO KIT	KIT KIT	SATZ UDSTYR	305C
10		NSS		2	NOT SERVICED SEPARATELY Gear NO SE REPARA SEPARA	NON FORNITO SEPARAT NOT SERVICED SEPARA	NON FOURNI SEPAREMI NIET ALLEEN VERKRIJG	KEIN ERSATZTEIL NOT SERVICED SEPARA	064N
11		NSS		1	NOT SERVICED SEPARATELY Shaft NO SE REPARA SEPARA	NON FORNITO SEPARAT NOT SERVICED SEPARA	NON FOURNI SEPAREMI NIET ALLEEN VERKRIJG	KEIN ERSATZTEIL NOT SERVICED SEPARA	064N
12		NSS		4	NOT SERVICED SEPARATELY Washer, Thrust NO SE REPARA SEPARA	NON FORNITO SEPARAT NOT SERVICED SEPARA	NON FOURNI SEPAREMI NIET ALLEEN VERKRIJG	KEIN ERSATZTEIL NOT SERVICED SEPARA	064N
13		NSS		4	NOT SERVICED SEPARATELY Gear NO SE REPARA SEPARA	NON FORNITO SEPARAT NOT SERVICED SEPARA	NON FOURNI SEPAREMI NIET ALLEEN VERKRIJG	KEIN ERSATZTEIL NOT SERVICED SEPARA	064N
		377177A3		1	KIT Inc. 14 - 16 EQUIPO	CORREDO KIT	KIT KIT	SATZ UDSTYR	305C
14		NSS		2	NOT SERVICED SEPARATELY Plate NO SE REPARA SEPARA	NON FORNITO SEPARAT NOT SERVICED SEPARA	NON FOURNI SEPAREMI NIET ALLEEN VERKRIJG	KEIN ERSATZTEIL NOT SERVICED SEPARA	064N
15		NSS		10	NOT SERVICED SEPARATELY Disc, Friction NO SE REPARA SEPARA	NON FORNITO SEPARAT NOT SERVICED SEPARA	NON FOURNI SEPAREMI NIET ALLEEN VERKRIJG	KEIN ERSATZTEIL NOT SERVICED SEPARA	064N
16		NSS		14	NOT SERVICED SEPARATELY Plate NO SE REPARA SEPARA	NON FORNITO SEPARAT NOT SERVICED SEPARA	NON FOURNI SEPAREMI NIET ALLEEN VERKRIJG	KEIN ERSATZTEIL NOT SERVICED SEPARA	064N
		1968293C1		1	KIT Inc. 21, 22 JEUGO	KIT JOGO	POCHETTE KIT	PACKUNG KIT	4830

05-18		p2	11/04

CARRIER AND DIFFERENTIAL - MFD, 10 BOLT HUB, WITHOUT DIFFERENTIAL LOCK
SUPPORTO E DIFFERENZIALE - MFD, MOZZO A 10 BULLONI, SENZA BLOCCAGGIO DEL DIFFERENZIALE
DIFFÉRENTIEL ET BOÎTIER DU DIFFÉRENTIEL DU PONT AVANT, MOYEU À 10 BOULONS, SANS BLOCAGE DU DIFFÉRENT
TRÄGER UND DIFFERENTIAL - ALLRADANTRIEB MIT 10 NABENSCHRAUBEN OHNE DIFFERENTIALSPERRE

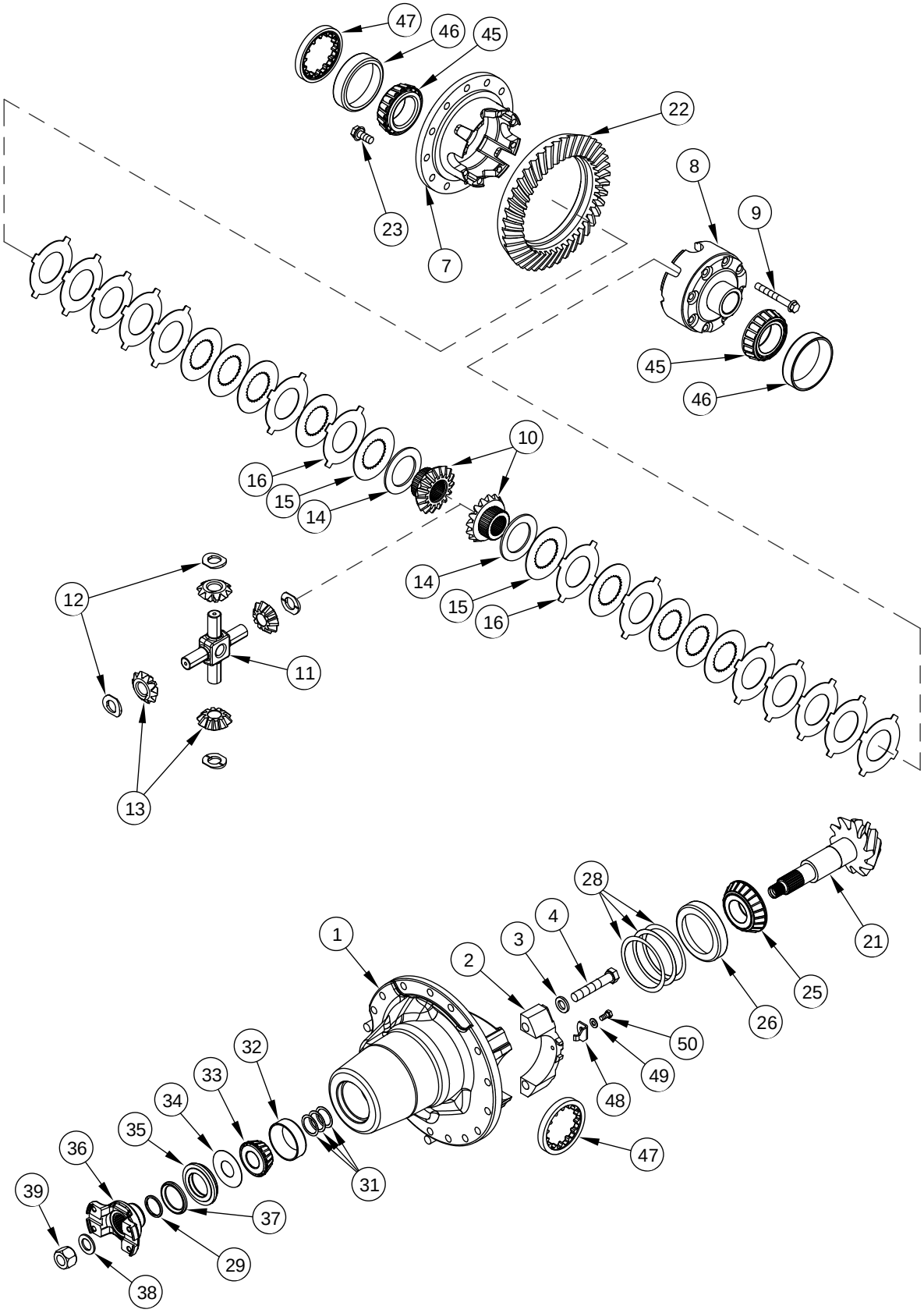

PORTADOR Y DIFERENCIAL - TDM, CUBO DE 10 PERNOS, SIN BLOQUEO DEL DIFERENCIAL
CARREGADOR E DIFERENCIAL - TMD, CUBO DE 10 PARAFUSOS, SEM TRANCA DO DIFERENCIAL
STEUNRING EN DIFFERENTIEEL - MFD, NAAF MET 10 BOUTEN , ZONDER DIFFERENTIEELVERGRENDELING
BÆRER OG DIFFERENTIALE - MFD, 10 BOLTNAV, UDEN DIFFERENTIALESPÆRRE

R	N	P.N.	MOD	Q	Description Denominacion	Descrizione Denominação	Description Beschrijving	Bezeichnung Beskrivelse	L.C.
21		NSS		1	NOT SERVICED SEPARATELY Shaft, Pinion				
						NON FORNITO SEPARAT	NON FOURNI SEPAREMI	KEIN ERSATZTEIL	064N
					NO SE REPARA SEPARA	NOT SERVICED SEPARA	NIET ALLEEN VERKRIJG	NOT SERVICED SEPARA	
22		NSS		1	NOT SERVICED SEPARATELY Ring, Gear				
						NON FORNITO SEPARAT	NON FOURNI SEPAREMI	KEIN ERSATZTEIL	064N
					NO SE REPARA SEPARA	NOT SERVICED SEPARA	NIET ALLEEN VERKRIJG	NOT SERVICED SEPARA	
23		H136416		12	SCREW	VITE	VIS	SCHRAUBE	040V
					TORNILLO	PARAFUSO	SCHROEF	SKRUE	
25		1968296C1		1	BEARING, CONE	CONO DEL CUSCINETTO	CONE DE ROULEMENT	LAGERKONUS	237C
					CONO	CONE	KEGEL	LEJEKONUS	
26		1968297C1		1	BEARING, CUP	ANELLO CUSCINETTO	CUVETTE ROULEMENT	LAGERSCHALE	062A
					PISTA DE RODAMIENTO	ANILHA ROLAMENTO	LAGER, CUP	LEJERING	
		1277229C1		1	PACKAGE Inc. 28	CONFEZIONE	COLIS	PACKUNG	5920
					PAQUETE	PACOTE	PACKAGE	PAKNING	
28		NSS		5	NOT SERVICED SEPARATELY Shim				
						NON FORNITO SEPARAT	NON FOURNI SEPAREMI	KEIN ERSATZTEIL	064N
					NO SE REPARA SEPARA	NOT SERVICED SEPARA	NIET ALLEEN VERKRIJG	NOT SERVICED SEPARA	
28		NSS		5	NOT SERVICED SEPARATELY Shim				
						NON FORNITO SEPARAT	NON FOURNI SEPAREMI	KEIN ERSATZTEIL	064N
					NO SE REPARA SEPARA	NOT SERVICED SEPARA	NIET ALLEEN VERKRIJG	NOT SERVICED SEPARA	
28		NSS		5	NOT SERVICED SEPARATELY Shim				
						NON FORNITO SEPARAT	NON FOURNI SEPAREMI	KEIN ERSATZTEIL	064N
					NO SE REPARA SEPARA	NOT SERVICED SEPARA	NIET ALLEEN VERKRIJG	NOT SERVICED SEPARA	
29		251189A1		1	SPACER	DISTANZIALE	ENTRETOISE	DISTANZSTÜCK	075D
					SEPARADOR	ESPACADOR	AFSTANDSRING	AFSTANDSSTYKKE	
		318504A1		1	KIT, SHIM Inc. 31	KIT SPESSORE	JEU DE CALES	EINSTELLSCHEIBEN, SC	P688
					JUEGO DE CALCES	JUEGO DE CALCES	PACKAGE, SHIMS	KIT, AFSTANDSSTYKKE	
31		NSS		1	NOT SERVICED SEPARATELY Shim				
						NON FORNITO SEPARAT	NON FOURNI SEPAREMI	KEIN ERSATZTEIL	064N
					NO SE REPARA SEPARA	NOT SERVICED SEPARA	NIET ALLEEN VERKRIJG	NOT SERVICED SEPARA	
31		NSS		1	NOT SERVICED SEPARATELY Shim				
						NON FORNITO SEPARAT	NON FOURNI SEPAREMI	KEIN ERSATZTEIL	064N
					NO SE REPARA SEPARA	NOT SERVICED SEPARA	NIET ALLEEN VERKRIJG	NOT SERVICED SEPARA	
31		NSS		1	NOT SERVICED SEPARATELY Shim				
						NON FORNITO SEPARAT	NON FOURNI SEPAREMI	KEIN ERSATZTEIL	064N
					NO SE REPARA SEPARA	NOT SERVICED SEPARA	NIET ALLEEN VERKRIJG	NOT SERVICED SEPARA	
31		NSS		1	NOT SERVICED SEPARATELY Shim				
						NON FORNITO SEPARAT	NON FOURNI SEPAREMI	KEIN ERSATZTEIL	064N
					NO SE REPARA SEPARA	NOT SERVICED SEPARA	NIET ALLEEN VERKRIJG	NOT SERVICED SEPARA	
31		NSS		1	NOT SERVICED SEPARATELY Shim				
						NON FORNITO SEPARAT	NON FOURNI SEPAREMI	KEIN ERSATZTEIL	064N
					NO SE REPARA SEPARA	NOT SERVICED SEPARA	NIET ALLEEN VERKRIJG	NOT SERVICED SEPARA	
31		NSS		1	NOT SERVICED SEPARATELY Shim				
						NON FORNITO SEPARAT	NON FOURNI SEPAREMI	KEIN ERSATZTEIL	064N
					NO SE REPARA SEPARA	NOT SERVICED SEPARA	NIET ALLEEN VERKRIJG	NOT SERVICED SEPARA	
31		NSS		1	NOT SERVICED SEPARATELY Shim				
						NON FORNITO SEPARAT	NON FOURNI SEPAREMI	KEIN ERSATZTEIL	064N
					NO SE REPARA SEPARA	NOT SERVICED SEPARA	NIET ALLEEN VERKRIJG	NOT SERVICED SEPARA	

05-18		p3	11/04

CARRIER AND DIFFERENTIAL - MFD, 10 BOLT HUB, WITHOUT DIFFERENTIAL LOCK
SUPPORTO E DIFFERENZIALE - MFD, MOZZO A 10 BULLONI, SENZA BLOCCAGGIO DEL DIFFERENZIALE
DIFFÉRENTIEL ET BOÎTIER DU DIFFÉRENTIEL DU PONT AVANT, MOYEU À 10 BOULONS, SANS BLOCAGE DU DIFFÉRENT
TRÄGER UND DIFFERENTIAL - ALLRADANTRIEB MIT 10 NABENSCHRAUBEN OHNE DIFFERENTIALSPERRE

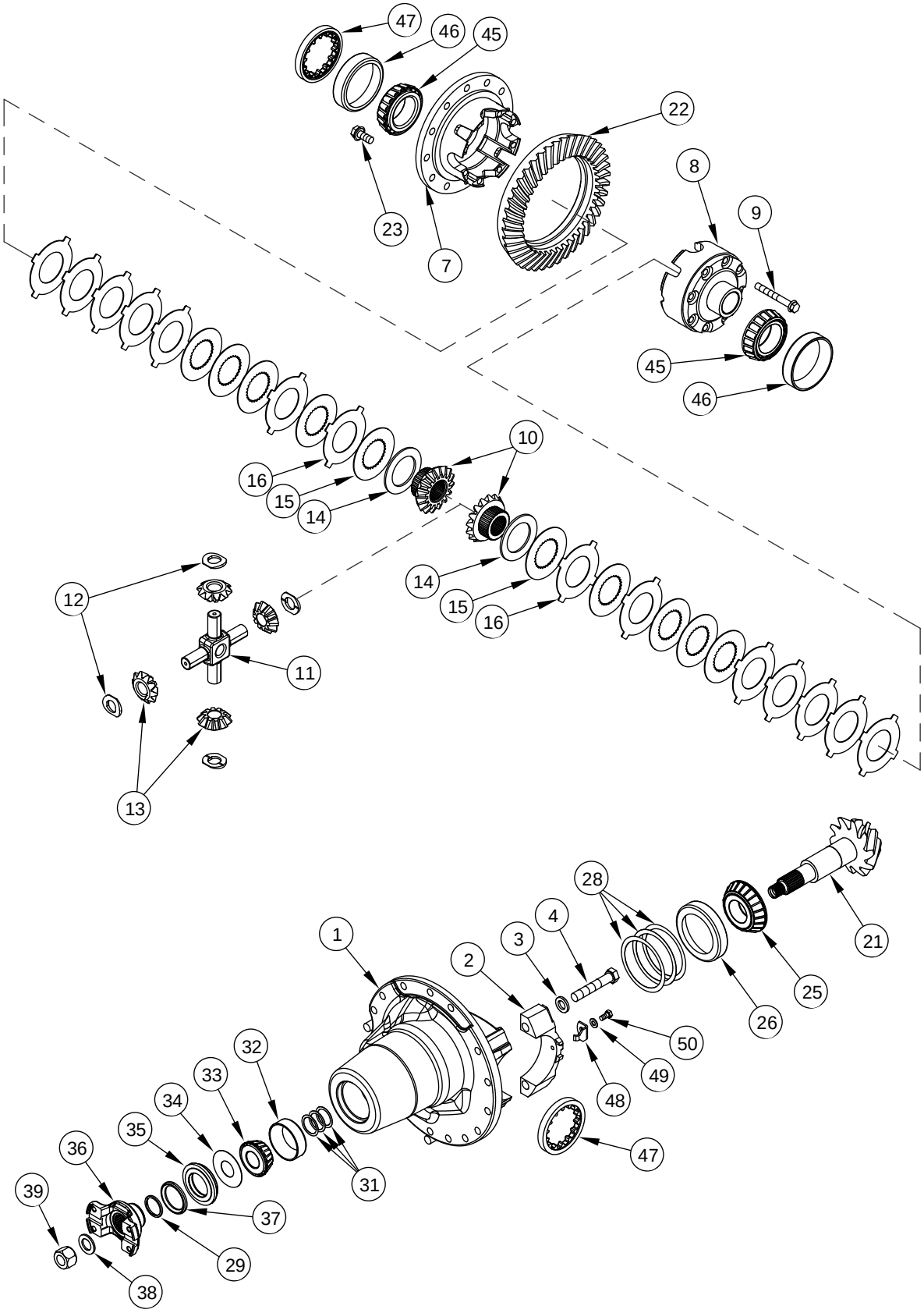

PORTADOR Y DIFERENCIAL - TDM, CUBO DE 10 PERNOS, SIN BLOQUEO DEL DIFERENCIAL
CARREGADOR E DIFERENCIAL - TMD, CUBO DE 10 PARAFUSOS, SEM TRANCA DO DIFERENCIAL
STEUNRING EN DIFFERENTIEEL - MFD, NAAF MET 10 BOUTEN , ZONDER DIFFERENTIEELVERGRENDELING
BÆRER OG DIFFERENTIALE - MFD, 10 BOLTNAV, UDEN DIFFERENTIALESPÆRRE

R	N	P.N.	MOD	Q	Description Denominacion	Descrizione Denominação	Description Beschrijving	Bezeichnung Beskrivelse	L.C.
31		NSS		1	NOT SERVICED SEPARATELY Shim				
						NON FORNITO SEPARAT	NON FOURNI SEPAREMI	KEIN ERSATZTEIL	064N
					NO SE REPARA SEPARA	NOT SERVICED SEPARA	NIET ALLEEN VERKRIJG	NOT SERVICED SEPARA	
31		NSS		1	NOT SERVICED SEPARATELY Shim				
						NON FORNITO SEPARAT	NON FOURNI SEPAREMI	KEIN ERSATZTEIL	064N
					NO SE REPARA SEPARA	NOT SERVICED SEPARA	NIET ALLEEN VERKRIJG	NOT SERVICED SEPARA	
31		NSS		1	NOT SERVICED SEPARATELY Shim				
						NON FORNITO SEPARAT	NON FOURNI SEPAREMI	KEIN ERSATZTEIL	064N
					NO SE REPARA SEPARA	NOT SERVICED SEPARA	NIET ALLEEN VERKRIJG	NOT SERVICED SEPARA	
32		1968289C1		1	BEARING, CUP	ANELLO CUSCINETTO	CUVETTE ROULEMENT	LAGERSCHALE	062A
					PISTA DE RODAMIENTO	ANILHA ROLAMENTO	LAGER, CUP	LEJERING	
33		1968288C1		1	BEARING, CONE	CONO DEL CUSCINETTO	CONE DE ROULEMENT	LAGERKONUS	237C
					CONO	CONE	KEGEL	LEJEKONUS	
34		318845A1		1	SLINGER	DISPOSITIVO LANCIO	DEFLECEUR D'HUILE	SCHLEUDER	8030
					LANZADOR DE ACEITE	BOMBA DE OLEO	SLINGER	OLIESLYNGERING	
35		H758326		1	SEAL ASSY.	GRUPPO TENUTA	JOINT-D'ETANCH. ASS.	DICHTRING (KPLT.)	P558
					SELLO (CONJUNTO)	VEDADOR CONJUNTO	SEAL ASSY.	SEAL ASSY.	
36		87402730		1	YOKE Inc. 37	FORCELLA	MACHOIRE	GABEL	085F
					HORQUILLA	GARFO	VORK	KRAFTOVERFOERINGSO	
37		345427C1		1	SLINGER	DISPOSITIVO LANCIO	DEFLECEUR D'HUILE	SCHLEUDER	8030
					LANZADOR DE ACEITE	BOMBA DE OLEO	SLINGER	OLIESLYNGERING	
38		H224501		1	WASHER 7/8 inch	ROSETTA PIANA	RONDELLE	BEILAGSCHEIBE	131R
					ARANDELA	ANILHA	SLUITRING	FLADSKIVE	
39		232-46314		1	NUT, LOCK 7/8 NF	CONTRODADO	CONTRE-ECROU	KONTERMUTTER	P263
					CONTRA TUERCA	CONTRA PORCA	NUT, LOCK	NUT, LOCK	
45		1968291C1		2	BEARING	CUSCINETTO	ROULEMENT	LAGER	0600
					COJINETE	ROLAMENTO	BEARING	BEARING	
46		1968292C1		2	BEARING	CUSCINETTO	ROULEMENT	LAGER	0600
					COJINETE	ROLAMENTO	BEARING	BEARING	
47		1277233C1		2	RING	ANELLO	ANNEAU	RING	045A
					ANILLO	ANEL	RING	RING	
48		1277234C1		2	CLEVIS	FORCELLINO	FOURCHETTE	GABELKOPF	084F
					HORQUILLA PEQUENA	FORQUILHA	GAFFEL	GAFFELBOLT	
49		496-11034		2	WASHER 11/32 x 11/16 x 1/16				
						ROSETTA PIANA	RONDELLE	SCHEIBE	9720
					ARANDELA	ANILHA	SLUITRING	FLADSKIVE	
50		628-8016		2	SCREW M8 x 16; 10.9	VITE	VIS	SCHRAUBE	7450
					TORNILLO	PARAFUSO	SCHROEF	SKRUE	

05-19		p1	11/04

CARRIER AND DIFFERENTIAL - MFD, 10 BOLT HUB, WITH DIFFERENTIAL LOCK
SUPPORTO E DIFFERENZIALE - MFD, MOZZO A 10 BULLONI, CON BLOCCAGGIO DEL DIFFERENZIALE
DIFFÉRENTIEL ET BOÎTIER DU DIFFÉRENTIEL DU PONT AVANT, MOYEU À 10 BOULONS, AVEC BLOCAGE DU DIFFÉRENT
TRÄGER UND DIFFERENTIAL - ALLRADANTRIEB MIT 10 NABENSCHRAUBEN MIT DIFFERENTIALSPERRE

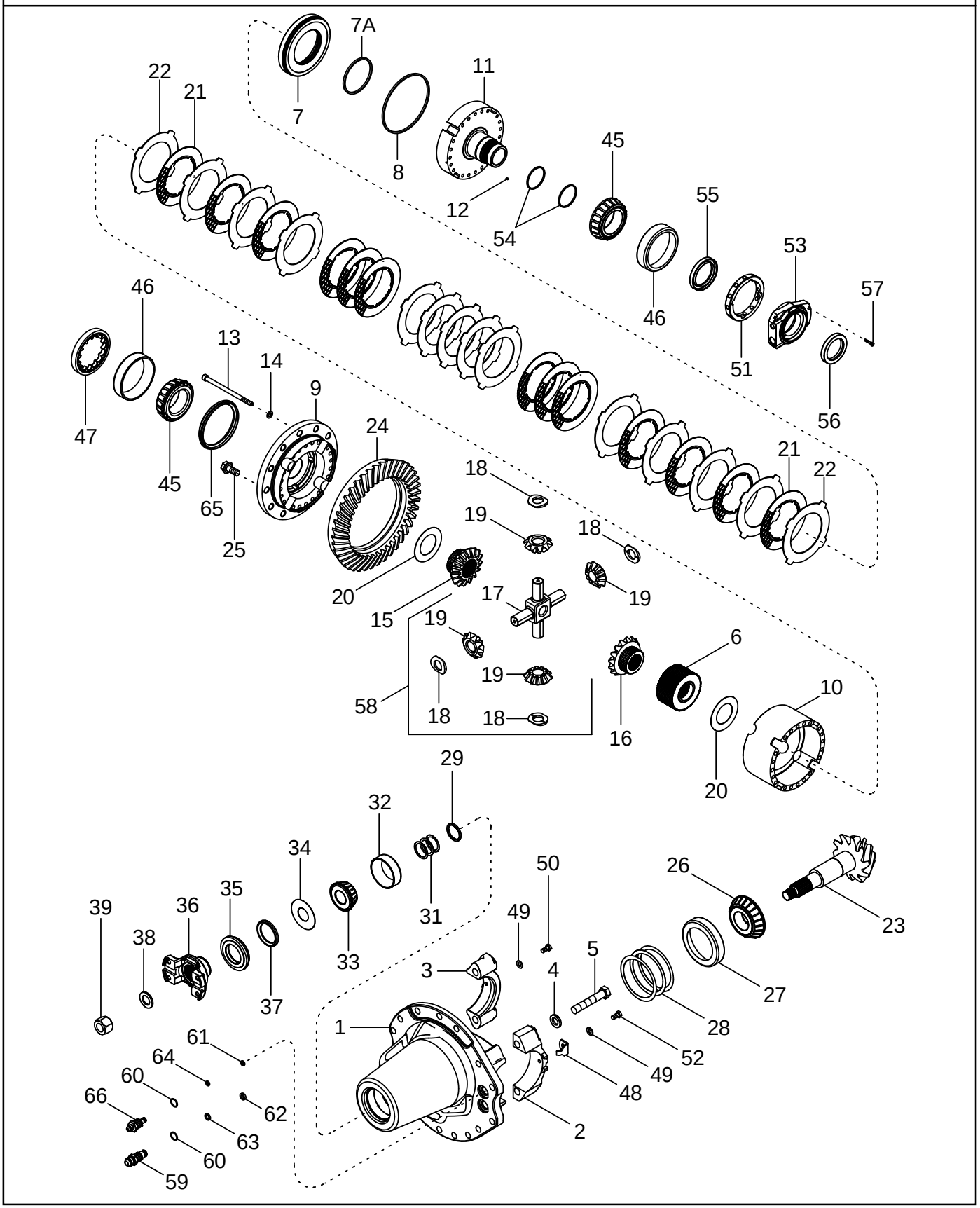

PORTADOR Y DIFERENCIAL - TDM, CUBO DE 10 PERNOS, CON BLOQUEO DEL DIFERENCIAL
CARREGADOR E DIFERENCIAL - TMD, CUBO DE 10 PARAFUSOS, COM TRANCA DO DIFERENCIAL
STEUNRING EN DIFFERENTIEEL - MFD, NAAF MET 10 BOUTEN, MET DIFFERENTIEELVERGRENDELING
BÆRER OG DIFFERENTIALE - MFD, 10 BOLTNAV, MED DIFFERENTIALESPÆRRE

R	N	P.N.	MOD	Q	Description Denominacion	Descrizione Denominação	Description Beschrijving	Bezeichnung Beskrivelse	L.C.
		87404543		1	CARRIER ASSY. Inc. 1 - 66 PORTA CARGA (CJTO)	DISP. TRAS, COMP DIF CARREGADOR CONJUN	PILIER-SOUTIEN ASS. CARRIER ASSY.	TRAEGER (KPLT.) CARRIER ASSY.	P606
1		87404193		1	CARRIER Inc. 2 - 5 EJE DE SATELITES	PORTASATELLITI PORTA-SATELITES	PILIER, SOUTIEN SATELIETDRAGER	PLANETENTRÄGER SPIDSHJULSHOLDER	196P
2		NSS		1	NOT SERVICED SEPARATELY Cap NO SE REPARA SEPARA	NON FORNITO SEPARAT NOT SERVICED SEPARA	NON FOURNI SEPAREMI NIET ALLEEN VERKRIJG	KEIN ERSATZTEIL NOT SERVICED SEPARA	064N
3		NSS		1	NOT SERVICED SEPARATELY Cap NO SE REPARA SEPARA	NON FORNITO SEPARAT NOT SERVICED SEPARA	NON FOURNI SEPAREMI NIET ALLEEN VERKRIJG	KEIN ERSATZTEIL NOT SERVICED SEPARA	064N
4		896-12016		4	WASHER 17,5 x 30 x 4 mm ARANDELA	ROSETTA PIANA ANILHA	RONDELLE SLUITRING	SCHEIBE FLADSKIVE	9720
5		828-16090		4	SCREW M16 x 90; 10.9 TORNILLO	VITE PARAFUSO	VIS SCHROEF	SCHRAUBE SKRUE	7450
		87404541		1	CASE ASSY. Inc. 6 - 22 ESTUCHE (CONJUNTO)	ALLOGGIAM., COMPL. CARCACA CONJUNTO	BOITIER ASSEMBLE CASE ASSY.	GEHÄUSE (KPLT.) CASE ASSY.	P512
6		87404485		1	BLOCK DRIVER CONDUCTOR	ECCITATORE CONDUCTOR	CRABOT DRIVER	BLOCKTREIBER DRIVER	2840
7		87404477		1	PISTON EMBOLO	STANTUFFO PISTAO	PISTON ZUIGER	KOLBEN STEMPEL	235S
7A		87404468		1	SEAL ANILLO DE CIERRE	ANELLO DI TENUTA ANEL DE VEDACAO	JOINT DICHTINGSRING	DICHTUNG PAKNINGSRING	132A
8		87404466		1	SEAL ANILLO DE CIERRE	ANELLO DI TENUTA ANEL DE VEDACAO	JOINT DICHTINGSRING	DICHTUNG PAKNINGSRING	132A
		87404545		1	CASE ASSY. Inc. 9 - 14 ESTUCHE (CONJUNTO)	ALLOGGIAM., COMPL. CARCACA CONJUNTO	BOITIER ASSEMBLE CASE ASSY.	GEHÄUSE (KPLT.) CASE ASSY.	P512
9		NSS		1	NOT SERVICED SEPARATELY Flange NO SE REPARA SEPARA	NON FORNITO SEPARAT NOT SERVICED SEPARA	NON FOURNI SEPAREMI NIET ALLEEN VERKRIJG	KEIN ERSATZTEIL NOT SERVICED SEPARA	064N
10		NSS		1	NOT SERVICED SEPARATELY Housing NO SE REPARA SEPARA	NON FORNITO SEPARAT NOT SERVICED SEPARA	NON FOURNI SEPAREMI NIET ALLEEN VERKRIJG	KEIN ERSATZTEIL NOT SERVICED SEPARA	064N
11		NSS		1	NOT SERVICED SEPARATELY Cap NO SE REPARA SEPARA	NON FORNITO SEPARAT NOT SERVICED SEPARA	NON FOURNI SEPAREMI NIET ALLEEN VERKRIJG	KEIN ERSATZTEIL NOT SERVICED SEPARA	064N
12		87404998		1	PLUG TAPÓN	TAPPO BUJÃO	BOUCHON PLUG	STOPFEN PROP	050T
13		87404995		20	SCREW TORNILLO	VITE PARAFUSO	VIS SCHROEF	SCHRAUBE SKRUE	040V
14		87404996		20	WASHER ARANDELA	ROSETTA PIANA ANILHA	RONDELLE SLUITRING	BEILAGSCHEIBE FLADSKIVE	131R
		87404481		1	KIT Inc. 15 - 20 EQUIPO	CORREDO KIT	KIT KIT	SATZ UDSTYR	305C
15		NSS		1	NOT SERVICED SEPARATELY Gear NO SE REPARA SEPARA	NON FORNITO SEPARAT NOT SERVICED SEPARA	NON FOURNI SEPAREMI NIET ALLEEN VERKRIJG	KEIN ERSATZTEIL NOT SERVICED SEPARA	064N
16		NSS		1	NOT SERVICED SEPARATELY Gear NO SE REPARA SEPARA	NON FORNITO SEPARAT NOT SERVICED SEPARA	NON FOURNI SEPAREMI NIET ALLEEN VERKRIJG	KEIN ERSATZTEIL NOT SERVICED SEPARA	064N

05-19		p2	11/04

CARRIER AND DIFFERENTIAL - MFD, 10 BOLT HUB, WITH DIFFERENTIAL LOCK
SUPPORTO E DIFFERENZIALE - MFD, MOZZO A 10 BULLONI, CON BLOCCAGGIO DEL DIFFERENZIALE
DIFFÉRENTIEL ET BOÎTIER DU DIFFÉRENTIEL DU PONT AVANT, MOYEU À 10 BOULONS, AVEC BLOCAGE DU DIFFÉRENT
TRÄGER UND DIFFERENTIAL - ALLRADANTRIEB MIT 10 NABENSCHRAUBEN MIT DIFFERENTIALSPERRE

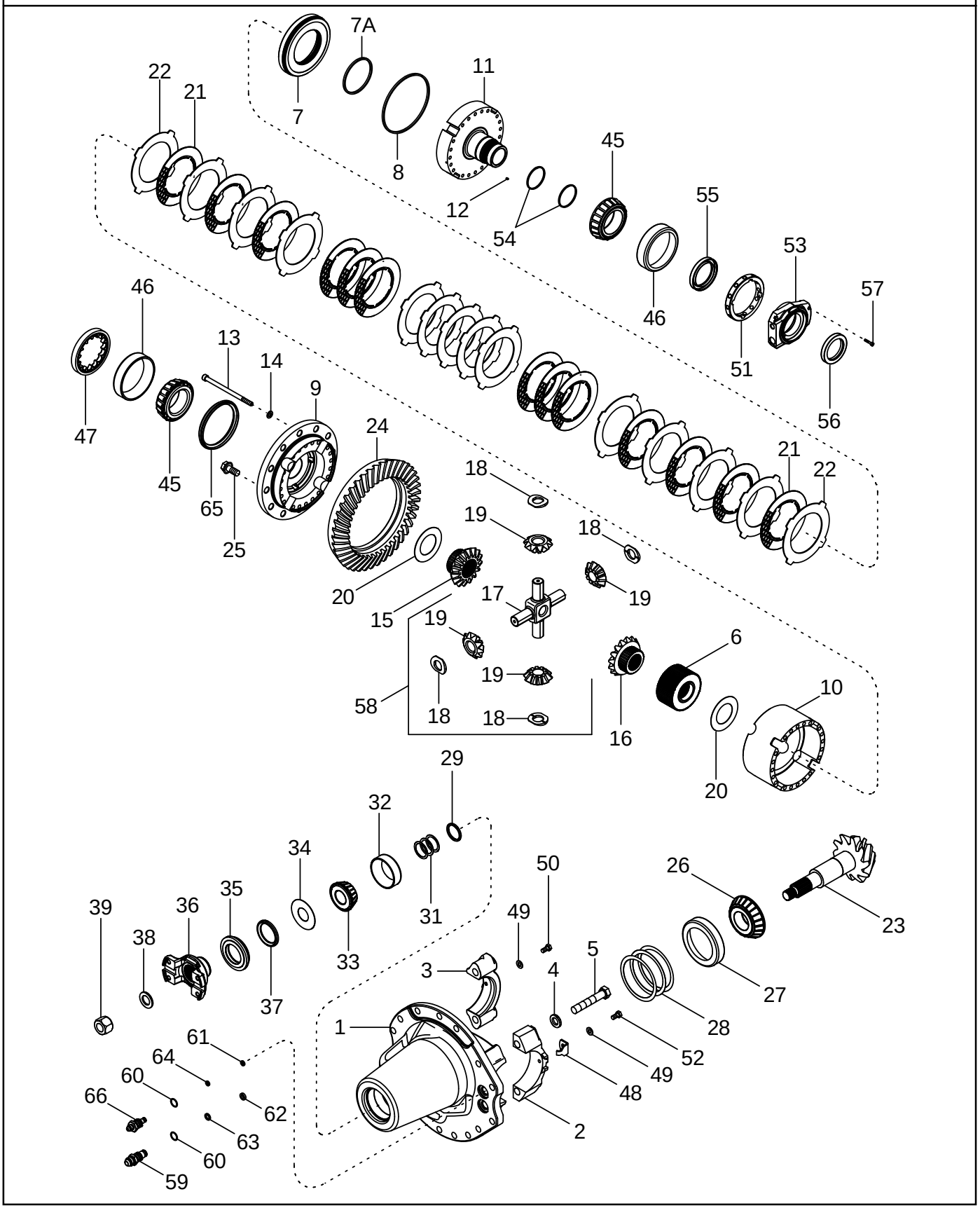

PORTADOR Y DIFERENCIAL - TDM, CUBO DE 10 PERNOS, CON BLOQUEO DEL DIFERENCIAL
CARREGADOR E DIFERENCIAL - TMD, CUBO DE 10 PARAFUSOS, COM TRANCA DO DIFERENCIAL
STEUNRING EN DIFFERENTIEEL - MFD, NAAF MET 10 BOUTEN, MET DIFFERENTIEELVERGRENDELING
BÆRER OG DIFFERENTIALE - MFD, 10 BOLTNAV, MED DIFFERENTIALESPÆRRE

R	N	P.N.	MOD	Q	Description Denominacion	Descrizione Denominação	Description Beschrijving	Bezeichnung Beskrivelse	L.C.
17		NSS		1	NOT SERVICED SEPARATELY Shaft				
						NON FORNITO SEPARAT	NON FOURNI SEPAREMI	KEIN ERSATZTEIL	064N
					NO SE REPARA SEPARA	NOT SERVICED SEPARA	NIET ALLEEN VERKRIJG	NOT SERVICED SEPARA	
18		NSS		4	NOT SERVICED SEPARATELY Washer, Thrust				
						NON FORNITO SEPARAT	NON FOURNI SEPAREMI	KEIN ERSATZTEIL	064N
					NO SE REPARA SEPARA	NOT SERVICED SEPARA	NIET ALLEEN VERKRIJG	NOT SERVICED SEPARA	
19		NSS		4	NOT SERVICED SEPARATELY Gear				
						NON FORNITO SEPARAT	NON FOURNI SEPAREMI	KEIN ERSATZTEIL	064N
					NO SE REPARA SEPARA	NOT SERVICED SEPARA	NIET ALLEEN VERKRIJG	NOT SERVICED SEPARA	
20		NSS		2	NOT SERVICED SEPARATELY Washer, Thrust				
						NON FORNITO SEPARAT	NON FOURNI SEPAREMI	KEIN ERSATZTEIL	064N
					NO SE REPARA SEPARA	NOT SERVICED SEPARA	NIET ALLEEN VERKRIJG	NOT SERVICED SEPARA	
		87405209		1	KIT Inc. 20, 21	CORREDO	KIT	SATZ	305C
					EQUIPO	KIT	KIT	UDSTYR	
21		NSS		13	NOT SERVICED SEPARATELY Disc, Friction				
						NON FORNITO SEPARAT	NON FOURNI SEPAREMI	KEIN ERSATZTEIL	064N
					NO SE REPARA SEPARA	NOT SERVICED SEPARA	NIET ALLEEN VERKRIJG	NOT SERVICED SEPARA	
22		NSS		14	NOT SERVICED SEPARATELY Plate				
						NON FORNITO SEPARAT	NON FOURNI SEPAREMI	KEIN ERSATZTEIL	064N
					NO SE REPARA SEPARA	NOT SERVICED SEPARA	NIET ALLEEN VERKRIJG	NOT SERVICED SEPARA	
		1968293C1		1	KIT Inc. 23, 24	KIT	POCHETTE	PACKUNG	4830
					JEUGO	JOGO	KIT	KIT	
23		NSS		1	NOT SERVICED SEPARATELY Shaft, Pinion				
						NON FORNITO SEPARAT	NON FOURNI SEPAREMI	KEIN ERSATZTEIL	064N
					NO SE REPARA SEPARA	NOT SERVICED SEPARA	NIET ALLEEN VERKRIJG	NOT SERVICED SEPARA	
24		NSS		1	NOT SERVICED SEPARATELY Ring, Gear				
						NON FORNITO SEPARAT	NON FOURNI SEPAREMI	KEIN ERSATZTEIL	064N
					NO SE REPARA SEPARA	NOT SERVICED SEPARA	NIET ALLEEN VERKRIJG	NOT SERVICED SEPARA	
25		H136416		12	SCREW	VITE	VIS	SCHRAUBE	040V
					TORNILLO	PARAFUSO	SCHROEF	SKRUE	
26		315421A1		1	BEARING, CONE	CONO DEL CUSCINETTO	CONE DE ROULEMENT	LAGERKONUS	237C
					CONO	CONE	KEGEL	LEJEKONUS	
27		315422A1		1	BEARING, CUP	ANELLO CUSCINETTO	CUVETTE ROULEMENT	LAGERSCHALE	062A
					PISTA DE RODAMIENTO	ANILHA ROLAMENTO	LAGER, CUP	LEJERING	
		1277229C1		1	PACKAGE Inc. 28	CONFEZIONE	COLIS	PACKUNG	5920
					PAQUETE	PACOTE	PACKAGE	PAKNING	
28		NSS		5	NOT SERVICED SEPARATELY Shim				
						NON FORNITO SEPARAT	NON FOURNI SEPAREMI	KEIN ERSATZTEIL	064N
					NO SE REPARA SEPARA	NOT SERVICED SEPARA	NIET ALLEEN VERKRIJG	NOT SERVICED SEPARA	
28		NSS		5	NOT SERVICED SEPARATELY Shim				
						NON FORNITO SEPARAT	NON FOURNI SEPAREMI	KEIN ERSATZTEIL	064N
					NO SE REPARA SEPARA	NOT SERVICED SEPARA	NIET ALLEEN VERKRIJG	NOT SERVICED SEPARA	
28		NSS		5	NOT SERVICED SEPARATELY Shim				
						NON FORNITO SEPARAT	NON FOURNI SEPAREMI	KEIN ERSATZTEIL	064N
					NO SE REPARA SEPARA	NOT SERVICED SEPARA	NIET ALLEEN VERKRIJG	NOT SERVICED SEPARA	
29		251189A1		1	SPACER	DISTANZIALE	ENTRETOISE	DISTANZSTÜCK	075D
					SEPARADOR	ESPACADOR	AFSTANDSRING	AFSTANDSSTYKKE	
		318504A1		1	KIT, SHIM Inc. 31	KIT SPESSORE	JEU DE CALES	EINSTELLSCHEIBEN, SC	P688
					JUEGO DE CALCES	JUEGO DE CALCES	PACKAGE, SHIMS	KIT, AFSTANDSSTYKKE	

05-19		p3	11/04

CARRIER AND DIFFERENTIAL - MFD, 10 BOLT HUB, WITH DIFFERENTIAL LOCK
SUPPORTO E DIFFERENZIALE - MFD, MOZZO A 10 BULLONI, CON BLOCCAGGIO DEL DIFFERENZIALE
DIFFÉRENTIEL ET BOÎTIER DU DIFFÉRENTIEL DU PONT AVANT, MOYEU À 10 BOULONS, AVEC BLOCAGE DU DIFFÉRENT
TRÄGER UND DIFFERENTIAL - ALLRADANTRIEB MIT 10 NABENSCHRAUBEN MIT DIFFERENTIALSPERRE

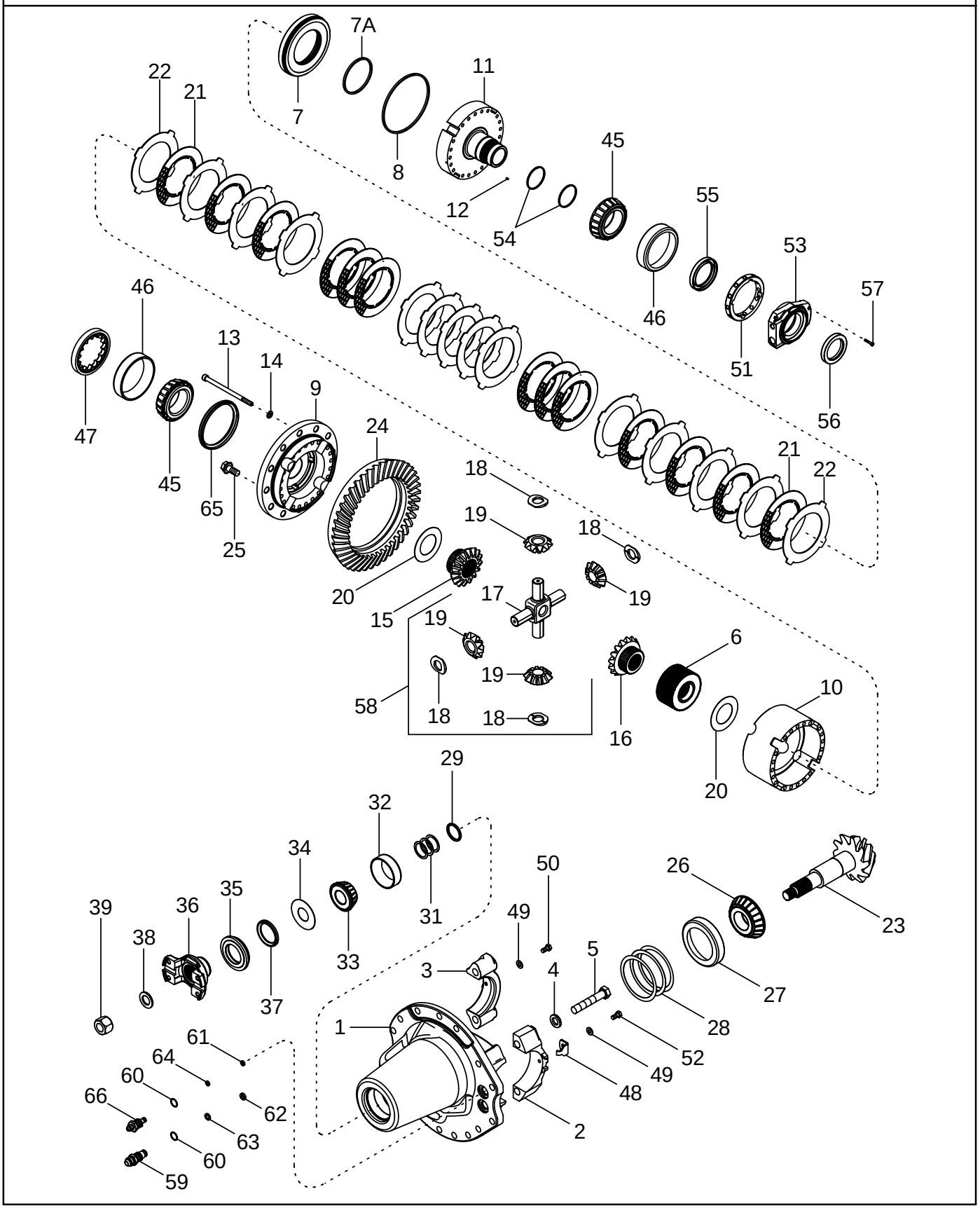

PORTADOR Y DIFERENCIAL - TDM, CUBO DE 10 PERNOS, CON BLOQUEO DEL DIFERENCIAL
CARREGADOR E DIFERENCIAL - TMD, CUBO DE 10 PARAFUSOS, COM TRANCA DO DIFERENCIAL
STEUNRING EN DIFFERENTIEEL - MFD, NAAF MET 10 BOUTEN, MET DIFFERENTIEELVERGRENDELING
BÆRER OG DIFFERENTIALE - MFD, 10 BOLTNAV, MED DIFFERENTIALESPÆRRE

R	N	P.N.	MOD	Q	Description Denominacion	Descrizione Denominação	Description Beschrijving	Bezeichnung Beskrivelse	L.C.
31		NSS		1	NOT SERVICED SEPARATELY Shim				
						NON FORNITO SEPARAT	NON FOURNI SEPAREM	KEIN ERSATZTEIL	064N
					NO SE REPARA SEPARA	NOT SERVICED SEPARA	NIET ALLEEN VERKRIJG	NOT SERVICED SEPARA	
31		NSS		1	NOT SERVICED SEPARATELY Shim				
						NON FORNITO SEPARAT	NON FOURNI SEPAREM	KEIN ERSATZTEIL	064N
					NO SE REPARA SEPARA	NOT SERVICED SEPARA	NIET ALLEEN VERKRIJG	NOT SERVICED SEPARA	
31		NSS		1	NOT SERVICED SEPARATELY Shim				
						NON FORNITO SEPARAT	NON FOURNI SEPAREM	KEIN ERSATZTEIL	064N
					NO SE REPARA SEPARA	NOT SERVICED SEPARA	NIET ALLEEN VERKRIJG	NOT SERVICED SEPARA	
31		NSS		1	NOT SERVICED SEPARATELY Shim				
						NON FORNITO SEPARAT	NON FOURNI SEPAREM	KEIN ERSATZTEIL	064N
					NO SE REPARA SEPARA	NOT SERVICED SEPARA	NIET ALLEEN VERKRIJG	NOT SERVICED SEPARA	
31		NSS		1	NOT SERVICED SEPARATELY Shim				
						NON FORNITO SEPARAT	NON FOURNI SEPAREM	KEIN ERSATZTEIL	064N
					NO SE REPARA SEPARA	NOT SERVICED SEPARA	NIET ALLEEN VERKRIJG	NOT SERVICED SEPARA	
31		NSS		1	NOT SERVICED SEPARATELY Shim				
						NON FORNITO SEPARAT	NON FOURNI SEPAREM	KEIN ERSATZTEIL	064N
					NO SE REPARA SEPARA	NOT SERVICED SEPARA	NIET ALLEEN VERKRIJG	NOT SERVICED SEPARA	
31		NSS		1	NOT SERVICED SEPARATELY Shim				
						NON FORNITO SEPARAT	NON FOURNI SEPAREM	KEIN ERSATZTEIL	064N
					NO SE REPARA SEPARA	NOT SERVICED SEPARA	NIET ALLEEN VERKRIJG	NOT SERVICED SEPARA	
31		NSS		1	NOT SERVICED SEPARATELY Shim				
						NON FORNITO SEPARAT	NON FOURNI SEPAREM	KEIN ERSATZTEIL	064N
					NO SE REPARA SEPARA	NOT SERVICED SEPARA	NIET ALLEEN VERKRIJG	NOT SERVICED SEPARA	
31		NSS		1	NOT SERVICED SEPARATELY Shim				
						NON FORNITO SEPARAT	NON FOURNI SEPAREM	KEIN ERSATZTEIL	064N
					NO SE REPARA SEPARA	NOT SERVICED SEPARA	NIET ALLEEN VERKRIJG	NOT SERVICED SEPARA	
32		315424A1		1	BEARING, CUP	ANELLO CUSCINETTO	CUVETTE ROULEMENT	LAGERSCHALE	062A
					PISTA DE RODAMIENTO	ANILHA ROLAMENTO	LAGER, CUP	LEJERING	
33		315423A1		1	BEARING, CONE	CONO DEL CUSCINETTO	CONE DE ROULEMENT	LAGERKONUS	237C
					CONO	CONE	KEGEL	LEJEKONUS	
34		318845A1		1	SLINGER	DISPOSITIVO LANCIO	DEFLECEUR D'HUILE	SCHLEUDER	8030
					LANZADOR DE ACEITE	BOMBA DE OLEO	SLINGER	OLIESLYNGERING	
35		H758326		1	SEAL ASSY.	GRUPPO TENUTA	JOINT-D'ETANCH. ASS.	DICHTRING (KPLT.)	P558
					SELLO (CONJUNTO)	VEDADOR CONJUNTO	SEAL ASSY.	SEAL ASSY.	
36		87402730		1	YOKE Inc. 37	FORCELLA	MACHOIRE	GABEL	085F
					HORQUILLA	GARFO	VORK	KRAFTOVERFOERINGSO	
37		345427C1		1	SLINGER	DISPOSITIVO LANCIO	DEFLECEUR D'HUILE	SCHLEUDER	8030
					LANZADOR DE ACEITE	BOMBA DE OLEO	SLINGER	OLIESLYNGERING	
38		H224501		1	WASHER 7/8 inch	ROSETTA PIANA	RONDELLE	BEILAGSCHEIBE	131R
					ARANDELA	ANILHA	SLUITRING	FLADSKIVE	
39		232-46314		1	NUT, LOCK 7/8 NF	CONTRODADO	CONTRE-ECROU	KONTERMUTTER	P263
					CONTRA TUERCA	CONTRA PORCA	NUT, LOCK	NUT, LOCK	
45		1968291C1		2	BEARING	CUSCINETTO	ROULEMENT	LAGER	0600
					COJINETE	ROLAMENTO	BEARING	BEARING	

05-19		p4	11/04

CARRIER AND DIFFERENTIAL - MFD, 10 BOLT HUB, WITH DIFFERENTIAL LOCK
SUPPORTO E DIFFERENZIALE - MFD, MOZZO A 10 BULLONI, CON BLOCCAGGIO DEL DIFFERENZIALE
DIFFÉRENTIEL ET BOÎTIER DU DIFFÉRENTIEL DU PONT AVANT, MOYEU À 10 BOULONS, AVEC BLOCAGE DU DIFFÉRENT
TRÄGER UND DIFFERENTIAL - ALLRADANTRIEB MIT 10 NABENSCHRAUBEN MIT DIFFERENTIALSPERRE

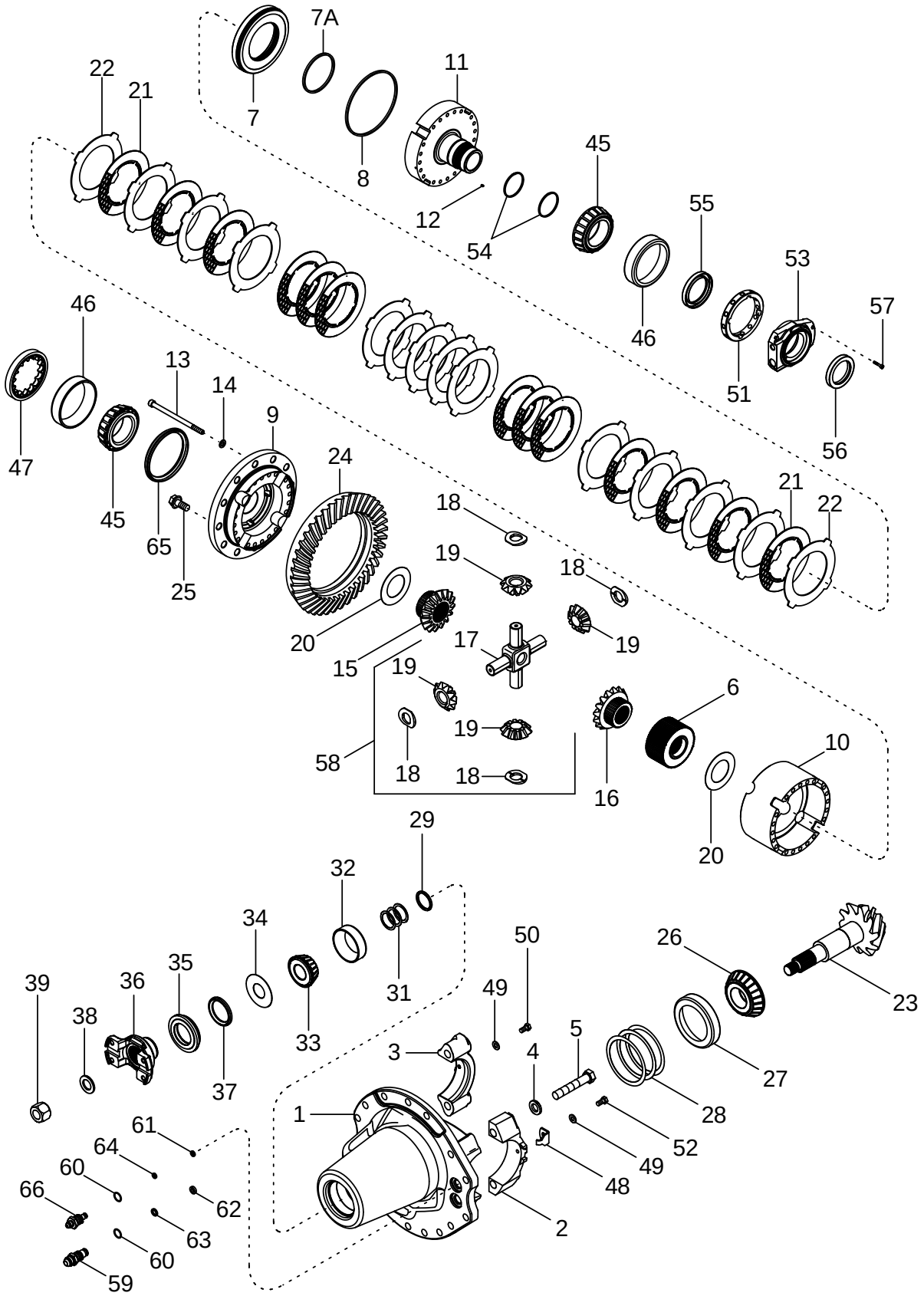

PORTADOR Y DIFERENCIAL - TDM, CUBO DE 10 PERNOS, CON BLOQUEO DEL DIFERENCIAL
CARREGADOR E DIFERENCIAL - TMD, CUBO DE 10 PARAFUSOS, COM TRANCA DO DIFERENCIAL
STEUNRING EN DIFFERENTIEEL - MFD, NAAF MET 10 BOUTEN, MET DIFFERENTIEELVERGRENDELING
BÆRER OG DIFFERENTIALE - MFD, 10 BOLTNAV, MED DIFFERENTIALESPÆRRE

R	N	P.N.	MOD	Q	Description Denominacion	Descrizione Denominação	Description Beschrijving	Bezeichnung Beskrivelse	L.C.
46		1968292C1		2	BEARING COJINETE	CUSCINETTO ROLAMENTO	ROULEMENT BEARING	LAGER BEARING	0600
47		1277233C1		1	RING ANILLO	ANELLO ANEL	ANNEAU RING	RING RING	045A
48		1277234C1		1	CLEVIS HORQUILLA PEQUENA	FORCELLINO FORQUILHA	FOURCHETTE GAFFEL	GABELKOPF GAFFELBOLT	084F
49		496-11034		2	WASHER 11/32 x 11/16 x 1/16 ARANDELA	ROSETTA PIANA ANILHA	RONDELLE SLUITRING	SCHEIBE FLADSKIVE	9720
50		628-8016		2	SCREW M8 x 16; 10.9 TORNILLO	VITE PARAFUSO	VIS SCHROEF	SCHRAUBE SKRUE	7450
51		87405001		1	NUT, SPECIAL TUERCA ESPECIAL	DADO SPECIALE PORCA ESPECIAL	DOUILLE DE CENTRAGE NUT, SPECIAL	SPEZIALMUTTER SPECIALMØTRIK	P838
52		87404488		1	SCREW TORNILLO	VITE PARAFUSO	VIS SCHROEF	SCHRAUBE SKRUE	040V
53		87404997		1	RETAINER, SEAL RETENADOR DE JUNTA	FERMO, TENUTA RETENTOR	RETENEUR DE JOINT RETAINER, SEAL	DICHTRINGHALTER PAKNING	P759
54		87404472		1	RING, PISTON ARO DE EMBOLO	ANELLO STANTUFFO SEGMENTO	SEGMENT DE PISTON ZUIGERRING	KOLBENRING STEMPELRING	053A
55		87404470		1	SEAL ANILLO DE CIERRE	ANELLO DI TENUTA ANEL DE VEDACAO	JOINT DICHTINGSRING	DICHTUNG PAKNINGSRING	132A
56		87404469		1	SEAL ANILLO DE CIERRE	ANELLO DI TENUTA ANEL DE VEDACAO	JOINT DICHTINGSRING	DICHTUNG PAKNINGSRING	132A
57		87404489		3	SCREW TORNILLO	VITE PARAFUSO	VIS SCHROEF	SCHRAUBE SKRUE	040V
58		87404481		1	KIT EQUIPO	CORREDO KIT	KIT KIT	SATZ UDSTYR	305C
59		87404479		1	COUPLING ELEMENTO DE ACOPLAI	TESTA A CAMPANA ELEMENTO DE ACOPLAI	CHAPE KOPPELING	GLOCKENKOPF KOBLING	109T
60		87405002		2	O-RING JUNTA HERMETICA	ANELLO TOROIDALE O-RING	JOINT THORIQUE O-RING	DICHTRING O-RING	055A
61		87404547		1	SEAL ANILLO DE CIERRE	ANELLO DI TENUTA ANEL DE VEDACAO	JOINT DICHTINGSRING	DICHTUNG PAKNINGSRING	132A
62		87404548		1	SEAL ANILLO DE CIERRE	ANELLO DI TENUTA ANEL DE VEDACAO	JOINT DICHTINGSRING	DICHTUNG PAKNINGSRING	132A
63		87404474		1	BACK-UP RING JUNTA	TENUTA, TAPPET SPEC VEDADOR ESPECIAL	CONTRE-JOINT RING, BACK-UP	DICHTUNGSCHALTER RING, BACK-UP	P658
64		87404473		1	BACK-UP RING JUNTA	TENUTA, TAPPET SPEC VEDADOR ESPECIAL	CONTRE-JOINT RING, BACK-UP	DICHTUNGSCHALTER RING, BACK-UP	P658
65		87404471		1	SEAL ANILLO DE CIERRE	ANELLO DI TENUTA ANEL DE VEDACAO	JOINT DICHTINGSRING	DICHTUNG PAKNINGSRING	132A
66		87404480		1	COUPLING ELEMENTO DE ACOPLAI	TESTA A CAMPANA ELEMENTO DE ACOPLAI	CHAPE KOPPELING	GLOCKENKOPF KOBLING	109T

05-20		p1	11/04

CARRIER AND DIFFERENTIAL - MFD, 12 BOLT HUB, WITH DIFFERENTIAL LOCK
SUPPORTO E DIFFERENZIALE - MFD, MOZZO A 12 BULLONI, CON BLOCCAGGIO DEL DIFFERENZIALE
DIFFÉRENTIEL ET BOÎTIER DU DIFFÉRENTIEL DU PONT AVANT, MOYEU À 12 BOULONS, AVEC BLOCAGE DU DIFFÉRENT
TRÄGER UND DIFFERENTIAL - ALLRADANTRIEB MIT 12 NABENSCHRAUBEN MIT DIFFERENTIALSPERRE

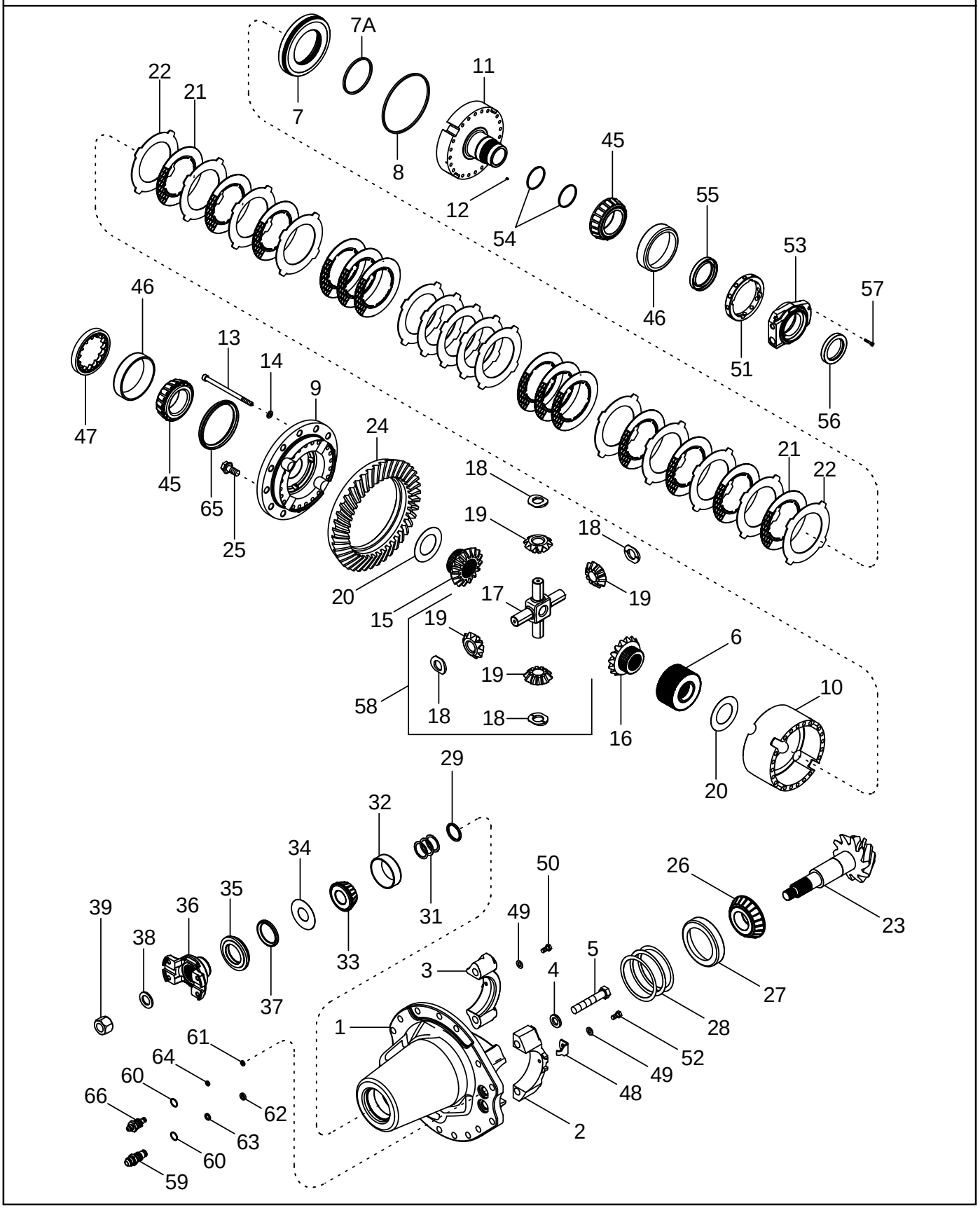

PORTADOR Y DIFERENCIAL - TDM, CUBO DE 12 PERNOS, CON BLOQUEO DEL DIFERENCIAL
CARREGADOR E DIFERENCIAL - TMD, CUBO DE 12 PARAFUSOS, COM TRANCA DO DIFERENCIAL
STEUNRING EN DIFFERENTIEEL - MFD, NAAF MET 12 BOUTEN, MET DIFFERENTIEELVERGRENDELING
BÆRER OG DIFFERENTIALE - MFD, 12 BOLTNAV, MED DIFFERENTIALESPÆRRE

R	N	P.N.	MOD	Q	Description Denominacion	Descrizione Denominação	Description Beschrijving	Bezeichnung Beskrivelse	L.C.
		87404542		1	CARRIER ASSY. Inc. 1 - 66 PORTA CARGA (CJTO)	DISP. TRAS, COMP DIF CARREGADOR CONJUN	PILIER-SOUTIEN ASS. CARRIER ASSY.	TRAEGER (KPLT.) CARRIER ASSY.	P606
1		**87404193**		1	CARRIER Inc. 2 - 5 EJE DE SATELITES	PORTASATELLITI PORTA-SATELITES	PILIER, SOUTIEN SATELIETDRAGER	PLANETENTRÄGER SPIDSHJULSHOLDER	196P
2		**NSS**		1	NOT SERVICED SEPARATELY Cap NO SE REPARA SEPARA	NON FORNITO SEPARAT NOT SERVICED SEPARA	NON FOURNI SEPAREMI NIET ALLEEN VERKRIJG	KEIN ERSATZTEIL NOT SERVICED SEPARA	064N
3		**NSS**		1	NOT SERVICED SEPARATELY Cap NO SE REPARA SEPARA	NON FORNITO SEPARAT NOT SERVICED SEPARA	NON FOURNI SEPAREMI NIET ALLEEN VERKRIJG	KEIN ERSATZTEIL NOT SERVICED SEPARA	064N
4		**896-12016**		4	WASHER 17,5 x 30 x 4 mm ARANDELA	ROSETTA PIANA ANILHA	RONDELLE SLUITRING	SCHEIBE FLADSKIVE	9720
5		**828-16090**		4	SCREW M16 x 90; 10.9 TORNILLO	VITE PARAFUSO	VIS SCHROEF	SCHRAUBE SKRUE	7450
		87404541		1	CASE ASSY. Inc. 6 - 22 ESTUCHE (CONJUNTO)	ALLOGGIAM., COMPL. CARCACA CONJUNTO	BOITIER ASSEMBLE CASE ASSY.	GEHÄUSE (KPLT.) CASE ASSY.	P512
6		**87404485**		1	BLOCK DRIVER CONDUCTOR	ECCITATORE CONDUCTOR	CRABOT DRIVER	BLOCKTREIBER DRIVER	2840
7		**87404477**		1	PISTON EMBOLO	STANTUFFO PISTAO	PISTON ZUIGER	KOLBEN STEMPEL	235S
7A		**87404468**		1	SEAL ANILLO DE CIERRE	ANELLO DI TENUTA ANEL DE VEDACAO	JOINT DICHTINGSRING	DICHTUNG PAKNINGSRING	132A
8		**87404466**		1	SEAL ANILLO DE CIERRE	ANELLO DI TENUTA ANEL DE VEDACAO	JOINT DICHTINGSRING	DICHTUNG PAKNINGSRING	132A
		87404545		1	CASE ASSY. Inc. 9 - 14 ESTUCHE (CONJUNTO)	ALLOGGIAM., COMPL. CARCACA CONJUNTO	BOITIER ASSEMBLE CASE ASSY.	GEHÄUSE (KPLT.) CASE ASSY.	P512
9		**NSS**		1	NOT SERVICED SEPARATELY Flange NO SE REPARA SEPARA	NON FORNITO SEPARAT NOT SERVICED SEPARA	NON FOURNI SEPAREMI NIET ALLEEN VERKRIJG	KEIN ERSATZTEIL NOT SERVICED SEPARA	064N
10		**NSS**		1	NOT SERVICED SEPARATELY Housing NO SE REPARA SEPARA	NON FORNITO SEPARAT NOT SERVICED SEPARA	NON FOURNI SEPAREMI NIET ALLEEN VERKRIJG	KEIN ERSATZTEIL NOT SERVICED SEPARA	064N
11		**NSS**		1	NOT SERVICED SEPARATELY Cap NO SE REPARA SEPARA	NON FORNITO SEPARAT NOT SERVICED SEPARA	NON FOURNI SEPAREMI NIET ALLEEN VERKRIJG	KEIN ERSATZTEIL NOT SERVICED SEPARA	064N
12		**87404998**		1	PLUG TAPÓN	TAPPO BUJÃO	BOUCHON PLUG	STOPFEN PROP	050T
13		**87404995**		20	SCREW TORNILLO	VITE PARAFUSO	VIS SCHROEF	SCHRAUBE SKRUE	040V
14		**87404996**		20	WASHER ARANDELA	ROSETTA PIANA ANILHA	RONDELLE SLUITRING	BEILAGSCHEIBE FLADSKIVE	131R
		87404481		1	KIT Inc. 15 - 20 EQUIPO	CORREDO KIT	KIT KIT	SATZ UDSTYR	305C
15		**NSS**		1	NOT SERVICED SEPARATELY Gear NO SE REPARA SEPARA	NON FORNITO SEPARAT NOT SERVICED SEPARA	NON FOURNI SEPAREMI NIET ALLEEN VERKRIJG	KEIN ERSATZTEIL NOT SERVICED SEPARA	064N
16		**NSS**		1	NOT SERVICED SEPARATELY Gear NO SE REPARA SEPARA	NON FORNITO SEPARAT NOT SERVICED SEPARA	NON FOURNI SEPAREMI NIET ALLEEN VERKRIJG	KEIN ERSATZTEIL NOT SERVICED SEPARA	064N

05-20		p2	11/04

CARRIER AND DIFFERENTIAL - MFD, 12 BOLT HUB, WITH DIFFERENTIAL LOCK
SUPPORTO E DIFFERENZIALE - MFD, MOZZO A 12 BULLONI, CON BLOCCAGGIO DEL DIFFERENZIALE
DIFFÉRENTIEL ET BOÎTIER DU DIFFÉRENTIEL DU PONT AVANT, MOYEU À 12 BOULONS, AVEC BLOCAGE DU DIFFÉRENT
TRÄGER UND DIFFERENTIAL - ALLRADANTRIEB MIT 12 NABENSCHRAUBEN MIT DIFFERENTIALSPERRE

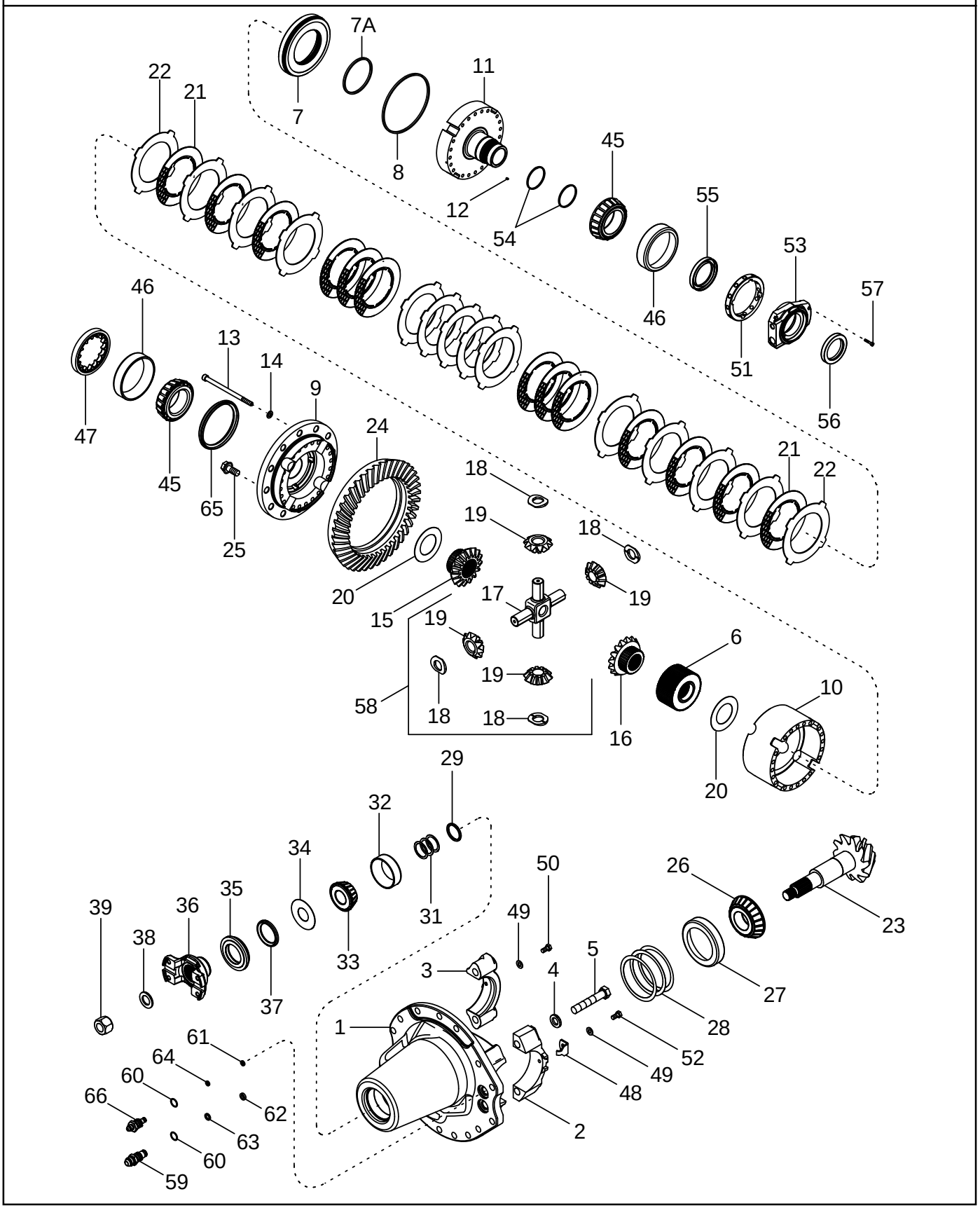

PORTADOR Y DIFERENCIAL - TDM, CUBO DE 12 PERNOS, CON BLOQUEO DEL DIFERENCIAL
CARREGADOR E DIFERENCIAL - TMD, CUBO DE 12 PARAFUSOS, COM TRANCA DO DIFERENCIAL
STEUNRING EN DIFFERENTIEEL - MFD, NAAF MET 12 BOUTEN, MET DIFFERENTIEELVERGRENDELING
BÆRER OG DIFFERENTIALE - MFD, 12 BOLTNAV, MED DIFFERENTIALESPÆRRE

R	N	P.N.	MOD	Q	Description Denominacion	Descrizione Denominação	Description Beschrijving	Bezeichnung Beskrivelse	L.C.
17		NSS		1	NOT SERVICED SEPARATELY Shaft				
						NON FORNITO SEPARAT	NON FOURNI SEPAREMI	KEIN ERSATZTEIL	064N
					NO SE REPARA SEPARA	NOT SERVICED SEPARA	NIET ALLEEN VERKRIJG	NOT SERVICED SEPARA	
18		NSS		4	NOT SERVICED SEPARATELY Washer, Thrust				
						NON FORNITO SEPARAT	NON FOURNI SEPAREMI	KEIN ERSATZTEIL	064N
					NO SE REPARA SEPARA	NOT SERVICED SEPARA	NIET ALLEEN VERKRIJG	NOT SERVICED SEPARA	
19		NSS		4	NOT SERVICED SEPARATELY Gear				
						NON FORNITO SEPARAT	NON FOURNI SEPAREMI	KEIN ERSATZTEIL	064N
					NO SE REPARA SEPARA	NOT SERVICED SEPARA	NIET ALLEEN VERKRIJG	NOT SERVICED SEPARA	
20		NSS		2	NOT SERVICED SEPARATELY Washer, Thrust				
						NON FORNITO SEPARAT	NON FOURNI SEPAREMI	KEIN ERSATZTEIL	064N
					NO SE REPARA SEPARA	NOT SERVICED SEPARA	NIET ALLEEN VERKRIJG	NOT SERVICED SEPARA	
		87405209		1	KIT Inc. 20, 21	CORREDO	KIT	SATZ	305C
					EQUIPO	KIT	KIT	UDSTYR	
21		NSS		13	NOT SERVICED SEPARATELY Disc, Friction				
						NON FORNITO SEPARAT	NON FOURNI SEPAREMI	KEIN ERSATZTEIL	064N
					NO SE REPARA SEPARA	NOT SERVICED SEPARA	NIET ALLEEN VERKRIJG	NOT SERVICED SEPARA	
22		NSS		14	NOT SERVICED SEPARATELY Plate				
						NON FORNITO SEPARAT	NON FOURNI SEPAREMI	KEIN ERSATZTEIL	064N
					NO SE REPARA SEPARA	NOT SERVICED SEPARA	NIET ALLEEN VERKRIJG	NOT SERVICED SEPARA	
		321516A1		1	BEVEL GEAR Inc. 23, 24	INGRANAGGIO CONICO	COUPLE-CONIQUE	WINKELTRIEB	Z453
					GRUPO CONICO	ENGRENAGEM CONICA	BEVEL GEAR	BEVEL GEAR	
23		NSS		1	NOT SERVICED SEPARATELY Shaft, Pinion				
						NON FORNITO SEPARAT	NON FOURNI SEPAREMI	KEIN ERSATZTEIL	064N
					NO SE REPARA SEPARA	NOT SERVICED SEPARA	NIET ALLEEN VERKRIJG	NOT SERVICED SEPARA	
24		NSS		1	NOT SERVICED SEPARATELY Ring, Gear				
						NON FORNITO SEPARAT	NON FOURNI SEPAREMI	KEIN ERSATZTEIL	064N
					NO SE REPARA SEPARA	NOT SERVICED SEPARA	NIET ALLEEN VERKRIJG	NOT SERVICED SEPARA	
25		H136416		12	SCREW	VITE	VIS	SCHRAUBE	040V
					TORNILLO	PARAFUSO	SCHROEF	SKRUE	
26		315421A1		1	BEARING, CONE	CONO DEL CUSCINETTO	CONE DE ROULEMENT	LAGERKONUS	237C
					CONO	CONE	KEGEL	LEJEKONUS	
27		315422A1		1	BEARING, CUP	ANELLO CUSCINETTO	CUVETTE ROULEMENT	LAGERSCHALE	062A
					PISTA DE RODAMIENTO	ANILHA ROLAMENTO	LAGER, CUP	LEJERING	
		1277229C1		1	PACKAGE Inc. 28	CONFEZIONE	COLIS	PACKUNG	5920
					PAQUETE	PACOTE	PACKAGE	PAKNING	
28		NSS		5	NOT SERVICED SEPARATELY Shim				
						NON FORNITO SEPARAT	NON FOURNI SEPAREMI	KEIN ERSATZTEIL	064N
					NO SE REPARA SEPARA	NOT SERVICED SEPARA	NIET ALLEEN VERKRIJG	NOT SERVICED SEPARA	
28		NSS		5	NOT SERVICED SEPARATELY Shim				
						NON FORNITO SEPARAT	NON FOURNI SEPAREMI	KEIN ERSATZTEIL	064N
					NO SE REPARA SEPARA	NOT SERVICED SEPARA	NIET ALLEEN VERKRIJG	NOT SERVICED SEPARA	
28		NSS		5	NOT SERVICED SEPARATELY Shim				
						NON FORNITO SEPARAT	NON FOURNI SEPAREMI	KEIN ERSATZTEIL	064N
					NO SE REPARA SEPARA	NOT SERVICED SEPARA	NIET ALLEEN VERKRIJG	NOT SERVICED SEPARA	
29		251189A1		1	SPACER	DISTANZIALE	ENTRETOISE	DISTANZSTÜCK	075D
					SEPARADOR	ESPACADOR	AFSTANDSRING	AFSTANDSSTYKKE	
		318504A1		1	KIT, SHIM Inc. 31	KIT SPESSORE	JEU DE CALES	EINSTELLSCHEIBEN, SC	P688
					JUEGO DE CALCES	JUEGO DE CALCES	PACKAGE, SHIMS	KIT, AFSTANDSSTYKKE	

05-20		p3	11/04

CARRIER AND DIFFERENTIAL - MFD, 12 BOLT HUB, WITH DIFFERENTIAL LOCK
SUPPORTO E DIFFERENZIALE - MFD, MOZZO A 12 BULLONI, CON BLOCCAGGIO DEL DIFFERENZIALE
DIFFÉRENTIEL ET BOÎTIER DU DIFFÉRENTIEL DU PONT AVANT, MOYEU À 12 BOULONS, AVEC BLOCAGE DU DIFFÉRENT
TRÄGER UND DIFFERENTIAL - ALLRADANTRIEB MIT 12 NABENSCHRAUBEN MIT DIFFERENTIALSPERRE

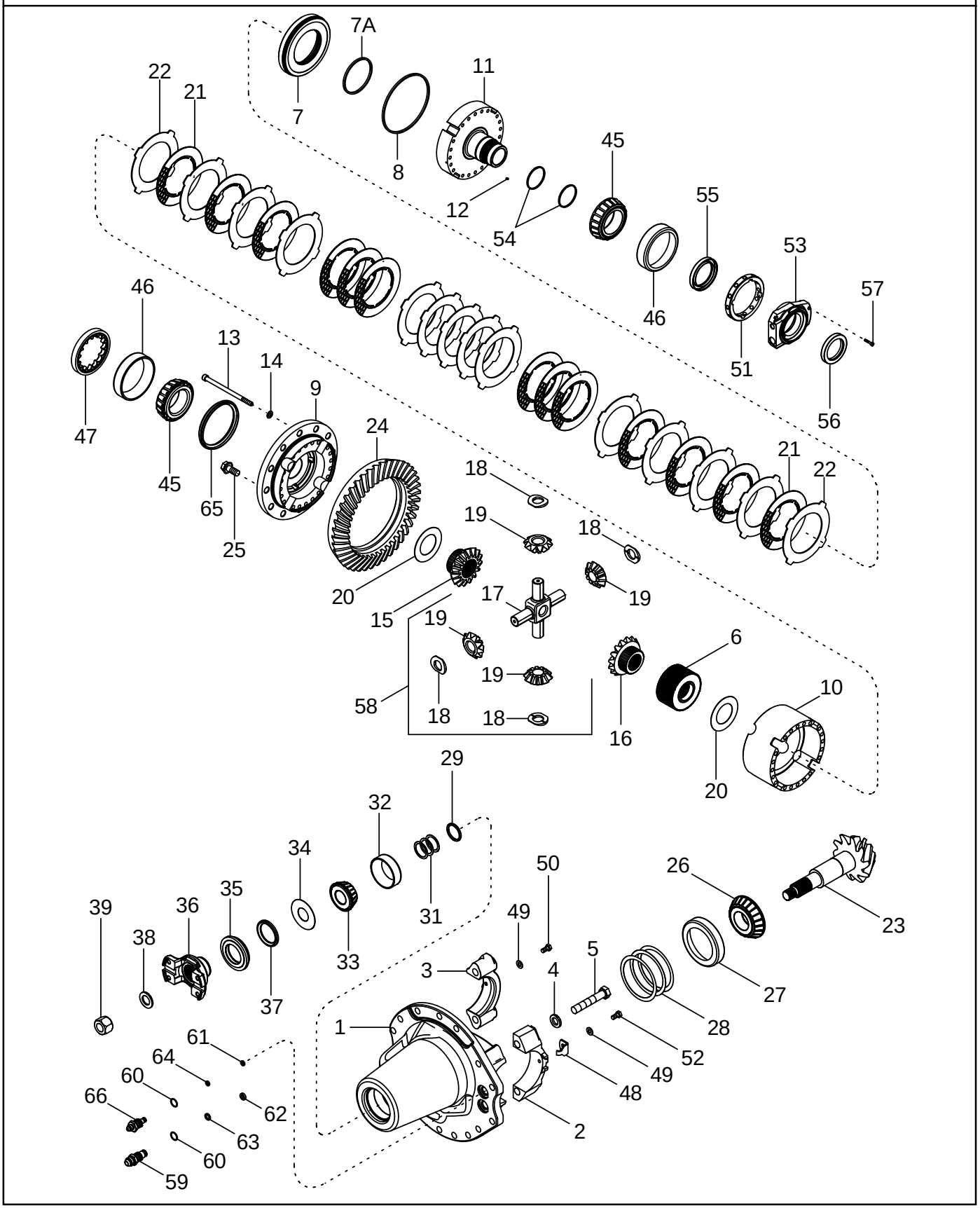

PORTADOR Y DIFERENCIAL - TDM, CUBO DE 12 PERNOS, CON BLOQUEO DEL DIFERENCIAL
CARREGADOR E DIFERENCIAL - TMD, CUBO DE 12 PARAFUSOS, COM TRANCA DO DIFERENCIAL
STEUNRING EN DIFFERENTIEEL - MFD, NAAF MET 12 BOUTEN, MET DIFFERENTIEELVERGRENDELING
BÆRER OG DIFFERENTIALE - MFD, 12 BOLTNAV, MED DIFFERENTIALESPÆRRE

R	N	P.N.	MOD	Q	Description Denominacion	Descrizione Denominação	Description Beschrijving	Bezeichnung Beskrivelse	L.C.
31		NSS		1	NOT SERVICED SEPARATELY Shim				
						NON FORNITO SEPARAT	NON FOURNI SEPAREMI	KEIN ERSATZTEIL	064N
					NO SE REPARA SEPARA	NOT SERVICED SEPARA	NIET ALLEEN VERKRIJG	NOT SERVICED SEPARA	
31		NSS		1	NOT SERVICED SEPARATELY Shim				
						NON FORNITO SEPARAT	NON FOURNI SEPAREMI	KEIN ERSATZTEIL	064N
					NO SE REPARA SEPARA	NOT SERVICED SEPARA	NIET ALLEEN VERKRIJG	NOT SERVICED SEPARA	
31		NSS		1	NOT SERVICED SEPARATELY Shim				
						NON FORNITO SEPARAT	NON FOURNI SEPAREMI	KEIN ERSATZTEIL	064N
					NO SE REPARA SEPARA	NOT SERVICED SEPARA	NIET ALLEEN VERKRIJG	NOT SERVICED SEPARA	
31		NSS		1	NOT SERVICED SEPARATELY Shim				
						NON FORNITO SEPARAT	NON FOURNI SEPAREMI	KEIN ERSATZTEIL	064N
					NO SE REPARA SEPARA	NOT SERVICED SEPARA	NIET ALLEEN VERKRIJG	NOT SERVICED SEPARA	
31		NSS		1	NOT SERVICED SEPARATELY Shim				
						NON FORNITO SEPARAT	NON FOURNI SEPAREMI	KEIN ERSATZTEIL	064N
					NO SE REPARA SEPARA	NOT SERVICED SEPARA	NIET ALLEEN VERKRIJG	NOT SERVICED SEPARA	
31		NSS		1	NOT SERVICED SEPARATELY Shim				
						NON FORNITO SEPARAT	NON FOURNI SEPAREMI	KEIN ERSATZTEIL	064N
					NO SE REPARA SEPARA	NOT SERVICED SEPARA	NIET ALLEEN VERKRIJG	NOT SERVICED SEPARA	
31		NSS		1	NOT SERVICED SEPARATELY Shim				
						NON FORNITO SEPARAT	NON FOURNI SEPAREMI	KEIN ERSATZTEIL	064N
					NO SE REPARA SEPARA	NOT SERVICED SEPARA	NIET ALLEEN VERKRIJG	NOT SERVICED SEPARA	
31		NSS		1	NOT SERVICED SEPARATELY Shim				
						NON FORNITO SEPARAT	NON FOURNI SEPAREMI	KEIN ERSATZTEIL	064N
					NO SE REPARA SEPARA	NOT SERVICED SEPARA	NIET ALLEEN VERKRIJG	NOT SERVICED SEPARA	
31		NSS		1	NOT SERVICED SEPARATELY Shim				
						NON FORNITO SEPARAT	NON FOURNI SEPAREMI	KEIN ERSATZTEIL	064N
					NO SE REPARA SEPARA	NOT SERVICED SEPARA	NIET ALLEEN VERKRIJG	NOT SERVICED SEPARA	
32		315424A1		1	BEARING, CUP	ANELLO CUSCINETTO	CUVETTE ROULEMENT	LAGERSCHALE	062A
					PISTA DE RODAMIENTO	ANILHA ROLAMENTO	LAGER, CUP	LEJERING	
33		315423A1		1	BEARING, CONE	CONO DEL CUSCINETTO	CONE DE ROULEMENT	LAGERKONUS	237C
					CONO	CONE	KEGEL	LEJEKONUS	
34		318845A1		1	SLINGER	DISPOSITIVO LANCIO	DEFLECEUR D'HUILE	SCHLEUDER	8030
					LANZADOR DE ACEITE	BOMBA DE OLEO	SLINGER	OLIESLYNGERING	
35		H758326		1	SEAL ASSY.	GRUPPO TENUTA	JOINT-D'ETANCH. ASS.	DICHTRING (KPLT.)	P558
					SELLO (CONJUNTO)	VEDADOR CONJUNTO	SEAL ASSY.	SEAL ASSY.	
36		87402730		1	YOKE Inc. 37	FORCELLA	MACHOIRE	GABEL	085F
					HORQUILLA	GARFO	VORK	KRAFTOVERFOERINGSO	
37		345427C1		1	SLINGER	DISPOSITIVO LANCIO	DEFLECEUR D'HUILE	SCHLEUDER	8030
					LANZADOR DE ACEITE	BOMBA DE OLEO	SLINGER	OLIESLYNGERING	
38		H224501		1	WASHER 7/8 inch	ROSETTA PIANA	RONDELLE	BEILAGSCHEIBE	131R
					ARANDELA	ANILHA	SLUITRING	FLADSKIVE	
39		232-46314		1	NUT, LOCK 7/8 NF	CONTRODADO	CONTRE-ECROU	KONTERMUTTER	P263
					CONTRA TUERCA	CONTRA PORCA	NUT, LOCK	NUT, LOCK	
45		1968291C1		2	BEARING	CUSCINETTO	ROULEMENT	LAGER	0600
					COJINETE	ROLAMENTO	BEARING	BEARING	

CARRIER AND DIFFERENTIAL - MFD, 12 BOLT HUB, WITH DIFFERENTIAL LOCK
SUPPORTO E DIFFERENZIALE - MFD, MOZZO A 12 BULLONI, CON BLOCCAGGIO DEL DIFFERENZIALE
DIFFÉRENTIEL ET BOÎTIER DU DIFFÉRENTIEL DU PONT AVANT, MOYEU À 12 BOULONS, AVEC BLOCAGE DU DIFFÉRENT
TRÄGER UND DIFFERENTIAL - ALLRADANTRIEB MIT 12 NABENSCHRAUBEN MIT DIFFERENTIALSPERRE

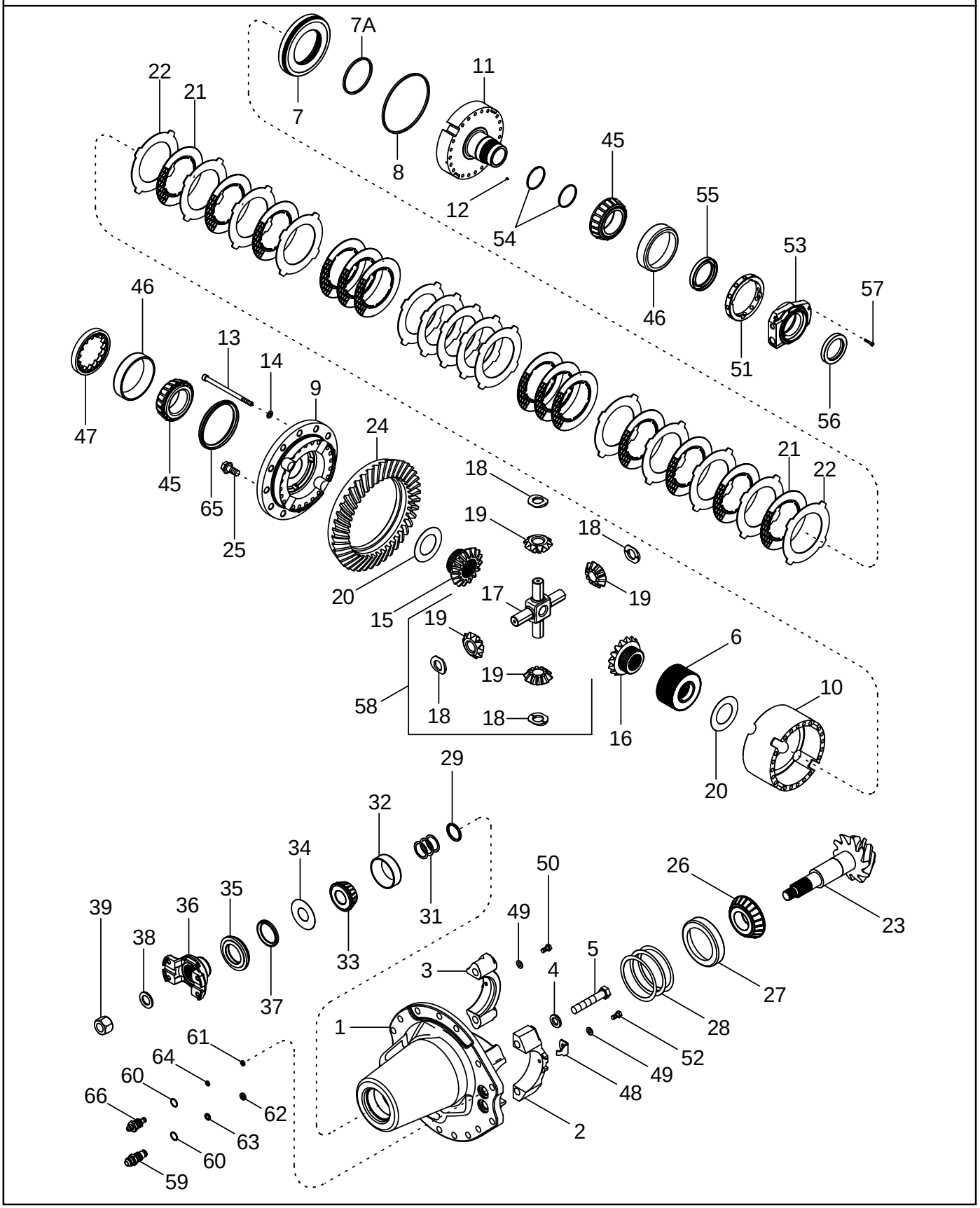

PORTADOR Y DIFERENCIAL - TDM, CUBO DE 12 PERNOS, CON BLOQUEO DEL DIFERENCIAL
CARREGADOR E DIFERENCIAL - TMD, CUBO DE 12 PARAFUSOS, COM TRANCA DO DIFERENCIAL
STEUNRING EN DIFFERENTIEEL - MFD, NAAF MET 12 BOUTEN, MET DIFFERENTIEELVERGRENDELING
BÆRER OG DIFFERENTIALE - MFD, 12 BOLTNAV, MED DIFFERENTIALESPÆRRE

R	N	P.N.	MOD	Q	Description Denominacion	Descrizione Denominação	Description Beschrijving	Bezeichnung Beskrivelse	L.C.
46		1968292C1		2	BEARING COJINETE	CUSCINETTO ROLAMENTO	ROULEMENT BEARING	LAGER BEARING	0600
47		1277233C1		1	RING ANILLO	ANELLO ANEL	ANNEAU RING	RING RING	045A
48		1277234C1		1	CLEVIS HORQUILLA PEQUENA	FORCELLINO FORQUILHA	FOURCHETTE GAFFEL	GABELKOPF GAFFELBOLT	084F
49		496-11034		2	WASHER 11/32 x 11/16 x 1/16 ARANDELA	ROSETTA PIANA ANILHA	RONDELLE SLUITRING	SCHEIBE FLADSKIVE	9720
50		628-8016		2	SCREW M8 x 16; 10.9 TORNILLO	VITE PARAFUSO	VIS SCHROEF	SCHRAUBE SKRUE	7450
51		87405001		1	NUT, SPECIAL TUERCA ESPECIAL	DADO SPECIALE PORCA ESPECIAL	DOUILLE DE CENTRAGE NUT, SPECIAL	SPEZIALMUTTER SPECIALMØTRIK	P838
52		87404488		1	SCREW TORNILLO	VITE PARAFUSO	VIS SCHROEF	SCHRAUBE SKRUE	040V
53		87404997		1	RETAINER, SEAL RETENADOR DE JUNTA	FERMO, TENUTA RETENTOR	RETENEUR DE JOINT RETAINER, SEAL	DICHTRINGHALTER PAKNING	P759
54		87404472		1	RING, PISTON ARO DE EMBOLO	ANELLO STANTUFFO SEGMENTO	SEGMENT DE PISTON ZUIGERRING	KOLBENRING STEMPELRING	053A
55		87404470		1	SEAL ANILLO DE CIERRE	ANELLO DI TENUTA ANEL DE VEDACAO	JOINT DICHTINGSRING	DICHTUNG PAKNINGSRING	132A
56		87404469		1	SEAL ANILLO DE CIERRE	ANELLO DI TENUTA ANEL DE VEDACAO	JOINT DICHTINGSRING	DICHTUNG PAKNINGSRING	132A
57		87404489		3	SCREW TORNILLO	VITE PARAFUSO	VIS SCHROEF	SCHRAUBE SKRUE	040V
58		87404481		1	KIT EQUIPO	CORREDO KIT	KIT KIT	SATZ UDSTYR	305C
59		87404479		1	COUPLING ELEMENTO DE ACOPLAI	TESTA A CAMPANA ELEMENTO DE ACOPLAI	CHAPE KOPPELING	GLOCKENKOPF KOBLING	109T
60		87405002		2	O-RING JUNTA HERMETICA	ANELLO TOROIDALE O-RING	JOINT THORIQUE O-RING	DICHTRING O-RING	055A
61		87404547		1	SEAL ANILLO DE CIERRE	ANELLO DI TENUTA ANEL DE VEDACAO	JOINT DICHTINGSRING	DICHTUNG PAKNINGSRING	132A
62		87404548		1	SEAL ANILLO DE CIERRE	ANELLO DI TENUTA ANEL DE VEDACAO	JOINT DICHTINGSRING	DICHTUNG PAKNINGSRING	132A
63		87404474		1	BACK-UP RING JUNTA	TENUTA, TAPPET SPEC VEDADOR ESPECIAL	CONTRE-JOINT RING, BACK-UP	DICHTUNGSCHALTER RING, BACK-UP	P658
64		87404473		1	BACK-UP RING JUNTA	TENUTA, TAPPET SPEC VEDADOR ESPECIAL	CONTRE-JOINT RING, BACK-UP	DICHTUNGSCHALTER RING, BACK-UP	P658
65		87404471		1	SEAL ANILLO DE CIERRE	ANELLO DI TENUTA ANEL DE VEDACAO	JOINT DICHTINGSRING	DICHTUNG PAKNINGSRING	132A
66		87404480		1	COUPLING ELEMENTO DE ACOPLAI	TESTA A CAMPANA ELEMENTO DE ACOPLAI	CHAPE KOPPELING	GLOCKENKOPF KOBLING	109T

05-21		p1	11/04

FRONT AXLE PLANETARIES AND HUB - MFD, 10 BOLT HUB
RIDUTTORI FINALI EPICICLOIDALI E MOZZO DELL'ASSALE ANTERIORE - MFD, MOZZO A 10 BULLONI
PLANÉTAIRES ET MOYEU DE L'ESSIEU AVANT DU PONT AVANT - MOYEU À 10 BOULONS
VORDERACHSEN-PLANETENGETRIEBE UND -NABE - ALLRADANTRIEB, 10 NABENSCHRAUBEN

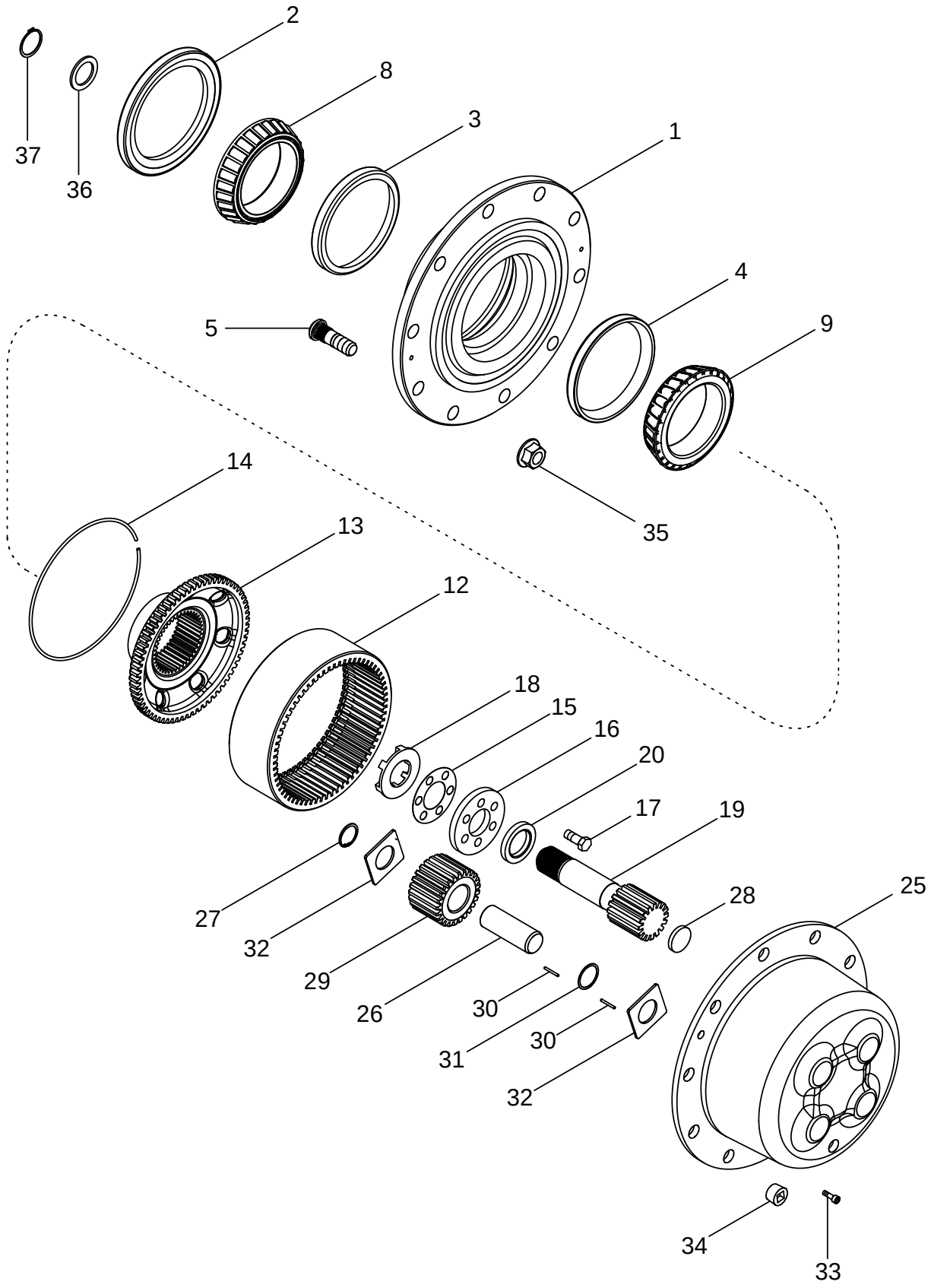

CUBO Y PLANETARIOS DEL EJE DELANTERO - TDM, CUBO DE 10 PERNOS
PLANETÁRIOS E CUBO DO EIXO DIANTEIRO - TMD, CUBO DE 10 PARAFUSOS
VOORAS, PLANETAIR EN NAAF - MFD, NAAF MET 10 BOUTEN
FORAKSEL PLANETGEAR OG NAV - MFD, 10 BOLTNAV

R	N	P.N.	MOD	Q	Description Denominacion	Descrizione Denominação	Description Beschrijving	Bezeichnung Beskrivelse	L.C.
		302173A1		2	HUB Inc. 1 - 5 CUBO	MOZZO CUBO	MOYEU NAAF	NABE NAV	135M
1		295165A1		1	HUB CUBO	MOZZO CUBO	MOYEU NAAF	NABE NAV	135M
2		87452967		1	KIT Seal EQUIPO	CORREDO KIT	KIT KIT	SATZ UDSTYR	305C
3		1277344C1		1	BEARING, CUP PISTA DE RODAMIENTO	ANELLO CUSCINETTO ANILHA ROLAMENTO	CUVETTE ROULEMENT LAGER, CUP	LAGERSCHALE LEJERING	062A
4		L33732		1	CUP ASSY. TAZA (CONJUNTO)	COMPLES.DELLA TAZZA CAPA CONJUNTO	CUVETTE (ASSEMBLE) CUP ASSY.	KONUSRING (BAUGRUP CUP ASSY.	P567
5		231023A1		10	STUD PRISIONERO	PRIGIONIERO PERNE	GOUJON TAPEIND	STEHBOLZEN STOETTEBOLT	210P
8		1277343C1		1	BEARING, CONE CONO	CONO DEL CUSCINETTO CONE	CONE DE ROULEMENT KEGEL	LAGERKONUS LEJEKONUS	237C
9		L33737		1	BEARING, CONE CONO	CONO DEL CUSCINETTO CONE	CONE DE ROULEMENT KEGEL	LAGERKONUS LEJEKONUS	237C
		281984A1		2	GEAR, RING Inc. 12 - 14 CORONA DENTADA	CORONA DENTATA CREMALHEIRA	COURONNE DENTÉE KROONWIEL	ZAHNKRANZ TANDKRANS	297C
12		NSS		1	NOT SERVICED SEPARATELY Ring, Gear NO SE REPARA SEPARA	NON FORNITO SEPARAT NOT SERVICED SEPARA	NON FOURNI SEPAREMI NIET ALLEEN VERKRIJG	KEIN ERSATZTEIL NOT SERVICED SEPARA	064N
13		NSS		1	NOT SERVICED SEPARATELY Hub NO SE REPARA SEPARA	NON FORNITO SEPARAT NOT SERVICED SEPARA	NON FOURNI SEPAREMI NIET ALLEEN VERKRIJG	KEIN ERSATZTEIL NOT SERVICED SEPARA	064N
14		NSS		1	NOT SERVICED SEPARATELY Ring, Retaining NO SE REPARA SEPARA	NON FORNITO SEPARAT NOT SERVICED SEPARA	NON FOURNI SEPAREMI NIET ALLEEN VERKRIJG	KEIN ERSATZTEIL NOT SERVICED SEPARA	064N
		1981236C1		2	KIT, SHIM Consists Of 15 JUEGO DE CALCES	KIT SPESSORE JUEGO DE CALCES	JEU DE CALES PACKAGE, SHIMS	EINSTELLSCHEIBEN, SC KIT, AFSTANDSSTYKKE	P688
15		NSS		5	NOT SERVICED SEPARATELY Shim NO SE REPARA SEPARA	NON FORNITO SEPARAT NOT SERVICED SEPARA	NON FOURNI SEPAREMI NIET ALLEEN VERKRIJG	KEIN ERSATZTEIL NOT SERVICED SEPARA	064N
15		NSS		5	NOT SERVICED SEPARATELY Shim NO SE REPARA SEPARA	NON FORNITO SEPARAT NOT SERVICED SEPARA	NON FOURNI SEPAREMI NIET ALLEEN VERKRIJG	KEIN ERSATZTEIL NOT SERVICED SEPARA	064N
15		NSS		5	NOT SERVICED SEPARATELY Shim NO SE REPARA SEPARA	NON FORNITO SEPARAT NOT SERVICED SEPARA	NON FOURNI SEPAREMI NIET ALLEEN VERKRIJG	KEIN ERSATZTEIL NOT SERVICED SEPARA	064N
15		NSS		5	NOT SERVICED SEPARATELY Shim NO SE REPARA SEPARA	NON FORNITO SEPARAT NOT SERVICED SEPARA	NON FOURNI SEPAREMI NIET ALLEEN VERKRIJG	KEIN ERSATZTEIL NOT SERVICED SEPARA	064N
15		NSS		5	NOT SERVICED SEPARATELY Shim NO SE REPARA SEPARA	NON FORNITO SEPARAT NOT SERVICED SEPARA	NON FOURNI SEPAREMI NIET ALLEEN VERKRIJG	KEIN ERSATZTEIL NOT SERVICED SEPARA	064N
15		NSS		5	NOT SERVICED SEPARATELY Shim NO SE REPARA SEPARA	NON FORNITO SEPARAT NOT SERVICED SEPARA	NON FOURNI SEPAREMI NIET ALLEEN VERKRIJG	KEIN ERSATZTEIL NOT SERVICED SEPARA	064N
16		251190A1		2	PLATE, LARGE PLACA, GRANDE	PIASTRA, LARGA PLACA ESPESSA	PLAQUE, GRANDE PLATE, LARGE	PLATTE, GROSS PLATE, LARGE	Z308

FRONT AXLE PLANETARIES AND HUB - MFD, 10 BOLT HUB
RIDUTTORI FINALI EPICICLOIDALI E MOZZO DELL'ASSALE ANTERIORE - MFD, MOZZO A 10 BULLONI
PLANÉTAIRES ET MOYEU DE L'ESSIEU AVANT DU PONT AVANT - MOYEU À 10 BOULONS
VORDERACHSEN-PLANETENGETRIEBE UND -NABE - ALLRADANTRIEB, 10 NABENSCHRAUBEN

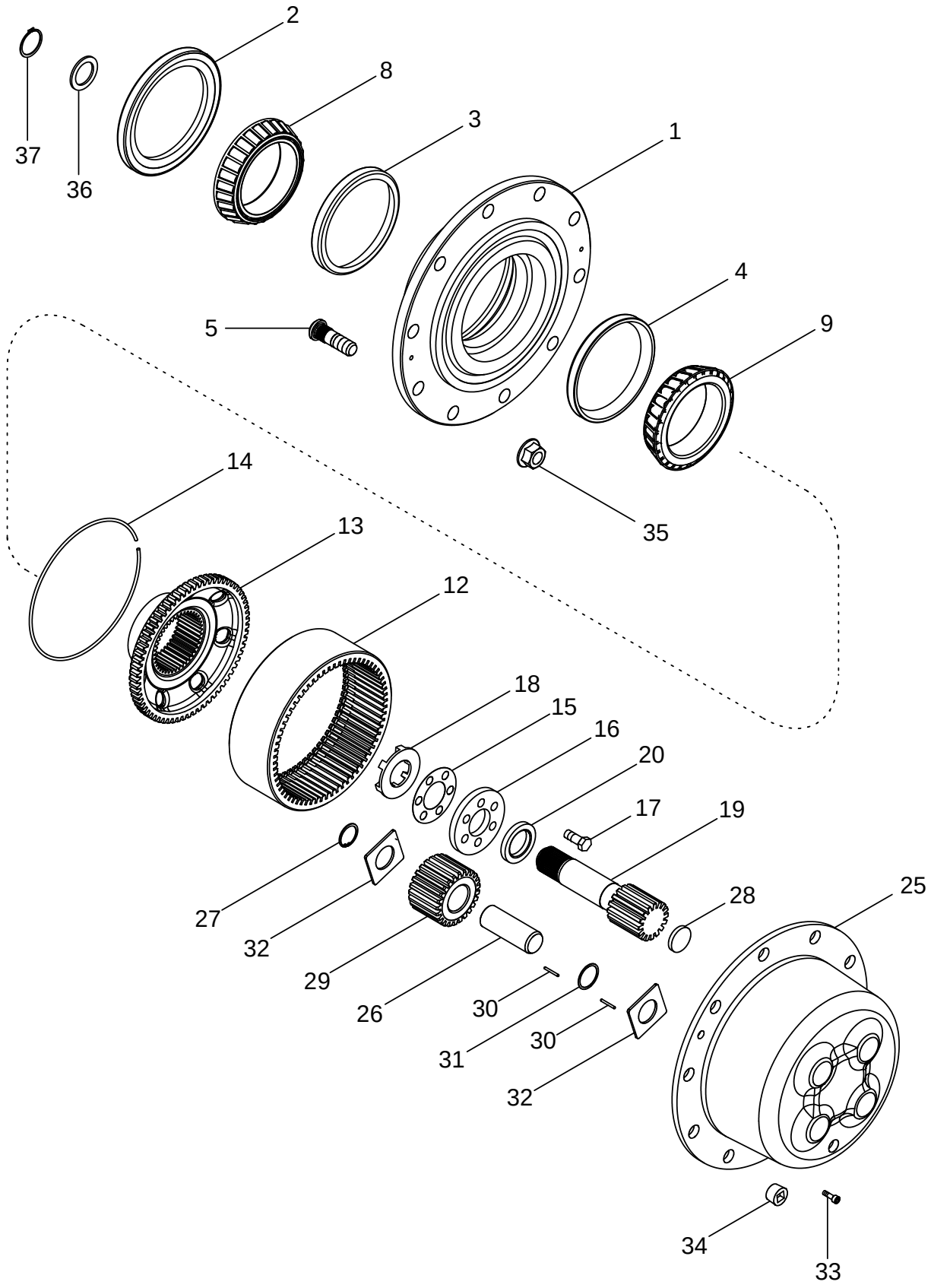

CUBO Y PLANETARIOS DEL EJE DELANTERO - TDM, CUBO DE 10 PERNOS
PLANETÁRIOS E CUBO DO EIXO DIANTEIRO - TMD, CUBO DE 10 PARAFUSOS
VOORAS, PLANETAIR EN NAAF - MFD, NAAF MET 10 BOUTEN
FORAKSEL PLANETGEAR OG NAV - MFD, 10 BOLTNAV

R	N	P.N.	MOD	Q	Description Denominacion	Descrizione Denominação	Description Beschrijving	Bezeichnung Beskrivelse	L.C.
17		628-12030		12	SCREW M12 x 30; 10,9 TORNILLO	VITE PARAFUSO	VIS SCHROEF	SCHRAUBE SKRUE	7450
18		310947A1		2	WASHER, THRUST ARANDELA DE TOPE	RONDELLA, DI SPINTA ANILHA DE ENCOSTO	RONDELLE DE BUTÉE SLUITRING DRUKPLAAT	DRUCKSCHEIBE TRYKSKIVE	023R
19		302198A2		2	SUN GEAR Inc. 20 PIÑÓN SOLAR	INGRANAGGIO, SOLE PIÑÓN SOLAR	PIGNON SOLAIRE SUN GEAR	SONNENRAD SOLGEAR	P365
20		NSS		1	NOT SERVICED SEPARATELY Washer, Thrust				
						NON FORNITO SEPARAT	NON FOURNI SEPAREMI	KEIN ERSATZTEIL	064N
					NO SE REPARA SEPARA	NOT SERVICED SEPARA	NIET ALLEEN VERKRIJG	NOT SERVICED SEPARA	
		302251A2		2	GEAR WHEEL Inc. 25 - 32 PLANETARIO	INGRANAGIO, SATELL PLANETARIA	PLANETAIRE GEAR WHEEL	PLANETENRAD GEAR WHEEL	Z589
25		NSS		1	NOT SERVICED SEPARATELY Flange				
						NON FORNITO SEPARAT	NON FOURNI SEPAREMI	KEIN ERSATZTEIL	064N
					NO SE REPARA SEPARA	NOT SERVICED SEPARA	NIET ALLEEN VERKRIJG	NOT SERVICED SEPARA	
26		302197A1		4	PIN, LARGE BULON/PIN, LARGO	SPINA, GRANDE PINO LARGO	AXE, GROS PIN, LARGE	BOLZEN, GROSS STOR PIND	Z009
27		100-21131		4	CIRCLIP No. 131 RETENEDOR	ANELLO DI RITEGNO FREIO DE MOLA	CIRCLIP BOORGVEER	HALTERING LÃSERING	P019
28		302184A1		1	BUTTON, HOLE PLUG PASTILLA	SPINA DEL FORO PASTILHA	PASTILLE BUTTON, HOLE PLUG	SPREIZSCHEIBE BUTTON, HOLE PLUG	Z355
		316330A2		1	KIT, FIP Inc. 29 - 32 KIT DE REVISION	KIT DI REVISIONE KIT REVISAO	KIT DE REVISION KIT, FIP	SERVICESATZ OPGRADERINGS SAET	023K
29		NSS		4	NOT SERVICED SEPARATELY Gear				
						NON FORNITO SEPARAT	NON FOURNI SEPAREMI	KEIN ERSATZTEIL	064N
					NO SE REPARA SEPARA	NOT SERVICED SEPARA	NIET ALLEEN VERKRIJG	NOT SERVICED SEPARA	
30		NSS		288	NOT SERVICED SEPARATELY Bearing, Needle				
						NON FORNITO SEPARAT	NON FOURNI SEPAREMI	KEIN ERSATZTEIL	064N
					NO SE REPARA SEPARA	NOT SERVICED SEPARA	NIET ALLEEN VERKRIJG	NOT SERVICED SEPARA	
31		NSS		4	NOT SERVICED SEPARATELY Spacer				
						NON FORNITO SEPARAT	NON FOURNI SEPAREMI	KEIN ERSATZTEIL	064N
					NO SE REPARA SEPARA	NOT SERVICED SEPARA	NIET ALLEEN VERKRIJG	NOT SERVICED SEPARA	
32		NSS		8	NOT SERVICED SEPARATELY Washer, Thrust				
						NON FORNITO SEPARAT	NON FOURNI SEPAREMI	KEIN ERSATZTEIL	064N
					NO SE REPARA SEPARA	NOT SERVICED SEPARA	NIET ALLEEN VERKRIJG	NOT SERVICED SEPARA	
33		864-6020		4	SCREW M6 x 20; 8.8 TORNILLO	VITE PARAFUSO	VIS SCHROEF	SCHRAUBE SKRUE	7450
34		221-887		2	PLUG 3/4 TAPÓN	TAPPO BUJAO	BOUCHON PLUG	STOPFEN PROP	6400
35		253212A1		20	NUT TUERCA	DADO PORCA	ECROU MOER	MUTTER MØTRIK	010D
36		87403378		2	WASHER, THRUST ARANDELA	RONDELLA, DI SPINTA ARRUELA	RONDELLE DE BUTEE WASHER, THRUST	ANLAUFSCHEIBE WASHER, THRUST	P621
37		87403379		2	SNAP RING ANILLO DE CIERRE	ANELLO ELASTICO ANEL TRAVA	ANNEAU-D'ARRET SNAP RING	SICHERUNGSRING SNAP RING	P345

05-22		p1	11/04

FRONT AXLE PLANETARIES AND HUB - MFD, 12 BOLT HUB
RIDUTTORI FINALI EPICICLOIDALI E MOZZO DELL'ASSALE ANTERIORE - MFD, MOZZO A 12 BULLONI
PLANÉTAIRES ET MOYEU DE L'ESSIEU AVANT DU PONT AVANT - MOYEU À 12 BOULONS
VORDERACHSEN-PLANETENGETRIEBE UND -NABE - ALLRADANTRIEB, 12 NABENSCHRAUBEN

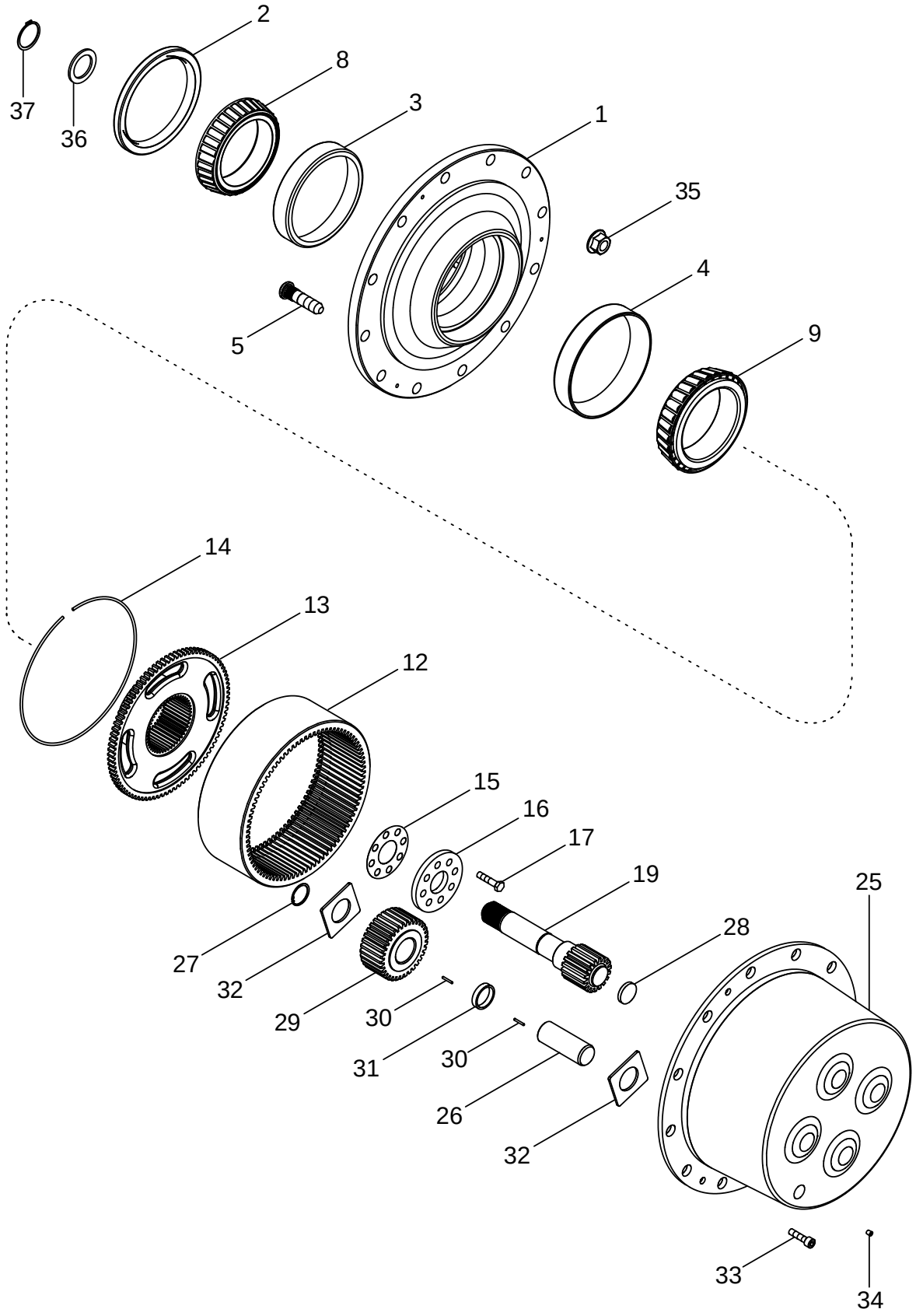

CUBO Y PLANETARIOS DEL EJE DELANTERO - TDM, CUBO DE 12 PERNOS
PLANETÁRIOS E CUBO DO EIXO DIANTEIRO - TMD, CUBO DE 12 PARAFUSOS
VOORAS, PLANETAIR EN NAAF - MFD, NAAF MET 12 BOUTEN
FORAKSEL PLANETGEAR OG NAV - MFD, 12 BOLTNAV

R	N	P.N.	MOD	Q	Description Denominacion	Descrizione Denominação	Description Beschrijving	Bezeichnung Beskrivelse	L.C.
		302172A1		2	HUB Inc. 1 - 5 CUBO	MOZZO CUBO	MOYEU NAAF	NABE NAV	135M
1		295168A1		1	HUB CUBO	MOZZO CUBO	MOYEU NAAF	NABE NAV	135M
2		87452966		1	KIT Seal EQUIPO	CORREDO KIT	KIT KIT	SATZ UDSTYR	305C
3		L31698		1	BEARING, CUP 7-3/16 OD x 1-15/16 inch wide (183 x 49 mm)				
					PISTA DE RODAMIENTO	ANELLO CUSCINETTO ANILHA ROLAMENTO	CUVETTE ROULEMENT LAGER, CUP	LAGERSCHALE LEJERING	062A
4		135649A1		1	BEARING, CUP PISTA DE RODAMIENTO	ANELLO CUSCINETTO ANILHA ROLAMENTO	CUVETTE ROULEMENT LAGER, CUP	LAGERSCHALE LEJERING	062A
5		297495A1		12	STUD PRISIONERO	PRIGIONIERO PERNE	GOUJON TAPEIND	STEHBOLZEN STOETTEBOLT	210P
8		311042A1		1	BEARING, CONE CONO	CONO DEL CUSCINETTO CONE	CONE DE ROULEMENT KEGEL	LAGERKONUS LEJEKONUS	237C
9		135648A1		1	BEARING, CONE CONO	CONO DEL CUSCINETTO CONE	CONE DE ROULEMENT KEGEL	LAGERKONUS LEJEKONUS	237C
		281985A1		2	GEAR, RING Inc. 12 - 14 CORONA DENTADA	CORONA DENTATA CREMALHEIRA	COURONNE DENTÉE KROONWIEL	ZAHNKRANZ TANDKRANS	297C
12		NSS		1	NOT SERVICED SEPARATELY Ring, Gear				
					NO SE REPARA SEPARA	NON FORNITO SEPARAT NOT SERVICED SEPARA	NON FOURNI SEPAREMI NIET ALLEEN VERKRIJG	KEIN ERSATZTEIL NOT SERVICED SEPARA	064N
13		NSS		1	NOT SERVICED SEPARATELY Hub				
					NO SE REPARA SEPARA	NON FORNITO SEPARAT NOT SERVICED SEPARA	NON FOURNI SEPAREMI NIET ALLEEN VERKRIJG	KEIN ERSATZTEIL NOT SERVICED SEPARA	064N
14		NSS		1	NOT SERVICED SEPARATELY Ring, Retaining				
					NO SE REPARA SEPARA	NON FORNITO SEPARAT NOT SERVICED SEPARA	NON FOURNI SEPAREMI NIET ALLEEN VERKRIJG	KEIN ERSATZTEIL NOT SERVICED SEPARA	064N
		302180A1		2	KIT, SHIM Inc. 15 JUEGO DE CALCES	KIT SPESSORE JUEGO DE CALCES	JEU DE CALES PACKAGE, SHIMS	EINSTELLSCHEIBEN, SC KIT, AFSTANDSSTYKKE	P688
15		NSS		5	NOT SERVICED SEPARATELY Shim				
					NO SE REPARA SEPARA	NON FORNITO SEPARAT NOT SERVICED SEPARA	NON FOURNI SEPAREMI NIET ALLEEN VERKRIJG	KEIN ERSATZTEIL NOT SERVICED SEPARA	064N
15		NSS		5	NOT SERVICED SEPARATELY Shim				
					NO SE REPARA SEPARA	NON FORNITO SEPARAT NOT SERVICED SEPARA	NON FOURNI SEPAREMI NIET ALLEEN VERKRIJG	KEIN ERSATZTEIL NOT SERVICED SEPARA	064N
15		NSS		5	NOT SERVICED SEPARATELY Shim				
					NO SE REPARA SEPARA	NON FORNITO SEPARAT NOT SERVICED SEPARA	NON FOURNI SEPAREMI NIET ALLEEN VERKRIJG	KEIN ERSATZTEIL NOT SERVICED SEPARA	064N
15		NSS		5	NOT SERVICED SEPARATELY Shim				
					NO SE REPARA SEPARA	NON FORNITO SEPARAT NOT SERVICED SEPARA	NON FOURNI SEPAREMI NIET ALLEEN VERKRIJG	KEIN ERSATZTEIL NOT SERVICED SEPARA	064N
15		NSS		5	NOT SERVICED SEPARATELY Shim				
					NO SE REPARA SEPARA	NON FORNITO SEPARAT NOT SERVICED SEPARA	NON FOURNI SEPAREMI NIET ALLEEN VERKRIJG	KEIN ERSATZTEIL NOT SERVICED SEPARA	064N
15		NSS		5	NOT SERVICED SEPARATELY Shim				
					NO SE REPARA SEPARA	NON FORNITO SEPARAT NOT SERVICED SEPARA	NON FOURNI SEPAREMI NIET ALLEEN VERKRIJG	KEIN ERSATZTEIL NOT SERVICED SEPARA	064N

FRONT AXLE PLANETARIES AND HUB - MFD, 12 BOLT HUB
RIDUTTORI FINALI EPICICLOIDALI E MOZZO DELL'ASSALE ANTERIORE - MFD, MOZZO A 12 BULLONI
PLANÉTAIRES ET MOYEU DE L'ESSIEU AVANT DU PONT AVANT - MOYEU À 12 BOULONS
VORDERACHSEN-PLANETENGETRIEBE UND -NABE - ALLRADANTRIEB, 12 NABENSCHRAUBEN

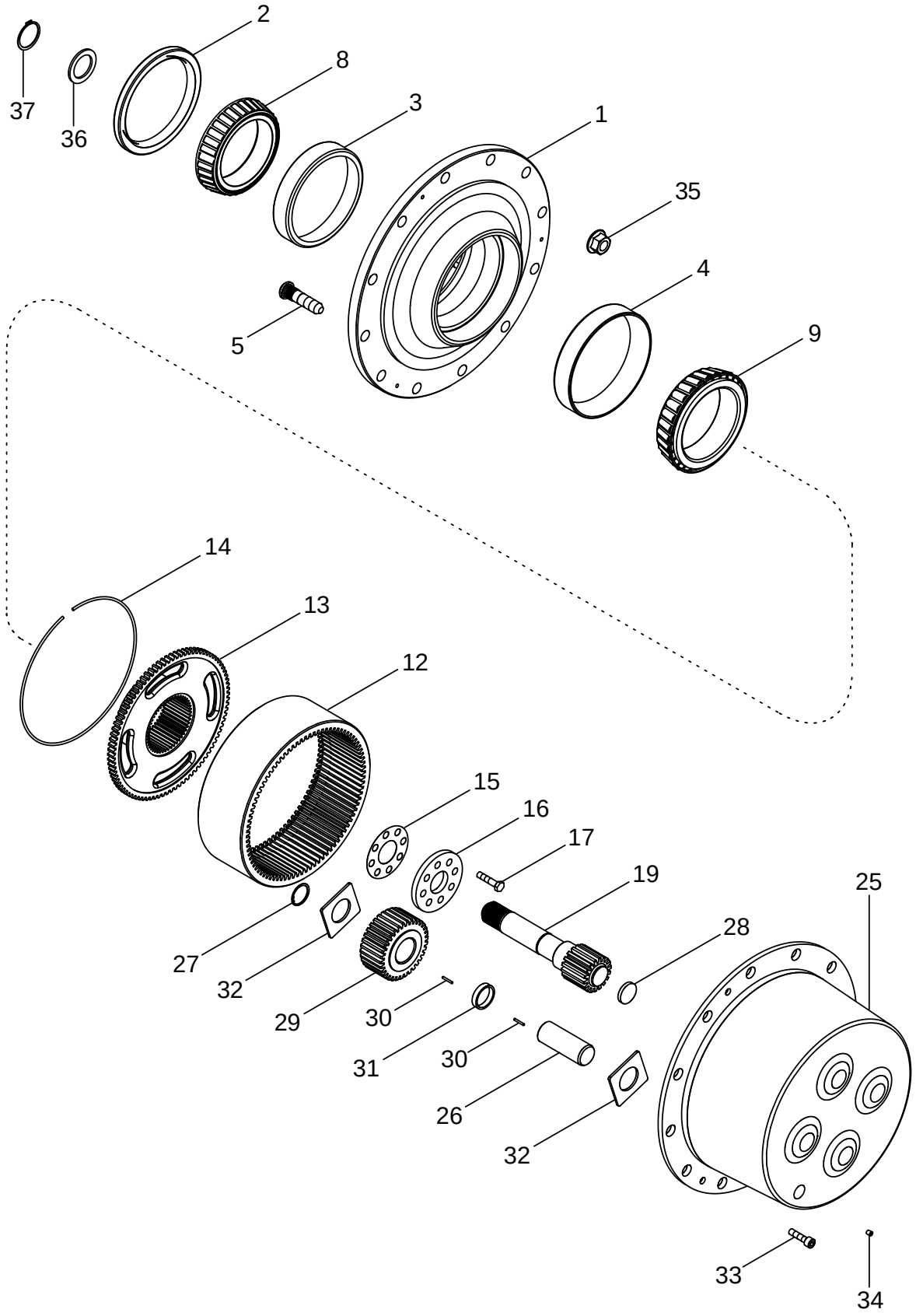

CUBO Y PLANETARIOS DEL EJE DELANTERO - TDM, CUBO DE 12 PERNOS
PLANETÁRIOS E CUBO DO EIXO DIANTEIRO - TMD, CUBO DE 12 PARAFUSOS
VOORAS, PLANETAIR EN NAAF - MFD, NAAF MET 12 BOUTEN
FORAKSEL PLANETGEAR OG NAV - MFD, 12 BOLTNAV

R	N	P.N.	MOD	Q	Description Denominacion	Descrizione Denominação	Description Beschrijving	Bezeichnung Beskrivelse	L.C.
16		281986A1		2	PLATE, LARGE PLACA, GRANDE	PIASTRA, LARGA PLACA ESPESSA	PLAQUE, GRANDE PLATE, LARGE	PLATTE, GROSS PLATE, LARGE	Z308
17		628-12030		16	SCREW M12 x 30; 10,9 TORNILLO	VITE PARAFUSO	VIS SCHROEF	SCHRAUBE SKRUE	7450
19		281982A3		2	SUN GEAR PIÑÓN SOLAR	INGRANAGGIO, SOLE PIÑÓN SOLAR	PIGNON SOLAIRE SUN GEAR	SONNENRAD SOLGEAR	P365
		302174A1		2	GEAR WHEEL Inc. 25 - 32 PLANETARIO	INGRANAGIO, SATELL PLANETARIA	PLANETAIRE GEAR WHEEL	PLANETENRAD GEAR WHEEL	Z589
25		NSS		1	NOT SERVICED SEPARATELY Flange NO SE REPARA SEPARA	NON FORNITO SEPARAT NOT SERVICED SEPARA	NON FOURNI SEPAREMI NIET ALLEEN VERKRIJG	KEIN ERSATZTEIL NOT SERVICED SEPARA	064N
26		302196A1		4	PIN, LARGE BULON/PIN, LARGO	SPINA, GRANDE PINO LARGO	AXE, GROS PIN, LARGE	BOLZEN, GROSS STOR PIND	Z009
27		100-21150		4	CIRCLIP No. 150 RETENEDOR	ANELLO DI RITEGNO FREIO DE MOLA	CIRCLIP BOORGVEER	HALTERING LÃSERING	P019
28		302184A1		1	BUTTON, HOLE PLUG PASTILLA	SPINA DEL FORO PASTILHA	PASTILLE BUTTON, HOLE PLUG	SPREIZSCHEIBE BUTTON, HOLE PLUG	Z355
		316328A1		1	KIT, FIP Inc. 29 - 32 KIT DE REVISION	KIT DI REVISIONE KIT REVISAO	KIT DE REVISION KIT, FIP	SERVICESATZ OPGRADERINGS SAET	023K
29		NSS		4	NOT SERVICED SEPARATELY Gear NO SE REPARA SEPARA	NON FORNITO SEPARAT NOT SERVICED SEPARA	NON FOURNI SEPAREMI NIET ALLEEN VERKRIJG	KEIN ERSATZTEIL NOT SERVICED SEPARA	064N
30		NSS		328	NOT SERVICED SEPARATELY Bearing, Needle NO SE REPARA SEPARA	NON FORNITO SEPARAT NOT SERVICED SEPARA	NON FOURNI SEPAREMI NIET ALLEEN VERKRIJG	KEIN ERSATZTEIL NOT SERVICED SEPARA	064N
31		NSS		4	NOT SERVICED SEPARATELY Spacer NO SE REPARA SEPARA	NON FORNITO SEPARAT NOT SERVICED SEPARA	NON FOURNI SEPAREMI NIET ALLEEN VERKRIJG	KEIN ERSATZTEIL NOT SERVICED SEPARA	064N
32		NSS		8	NOT SERVICED SEPARATELY Washer, Thrust NO SE REPARA SEPARA	NON FORNITO SEPARAT NOT SERVICED SEPARA	NON FOURNI SEPAREMI NIET ALLEEN VERKRIJG	KEIN ERSATZTEIL NOT SERVICED SEPARA	064N
33		864-6020		6	SCREW M6 x 20; 8.8 TORNILLO	VITE PARAFUSO	VIS SCHROEF	SCHRAUBE SKRUE	7450
34		221-887		2	PLUG 3/4 TAPÓN	TAPPO BUJAO	BOUCHON PLUG	STOPFEN PROP	6400
35		253212A1		24	NUT TUERCA	DADO PORCA	ECROU MOER	MUTTER MØTRIK	010D
36		87403378		1	WASHER, THRUST ARANDELA	RONDELLA, DI SPINTA ARRUELA	RONDELLE DE BUTEE WASHER, THRUST	ANLAUFSCHEIBE WASHER, THRUST	P621
37		87403379		1	SNAP RING ANILLO DE CIERRE	ANELLO ELASTICO ANEL TRAVA	ANNEAU-D'ARRET SNAP RING	SICHERUNGSRING SNAP RING	P345

05-23		p1	11/04

STEERING CYLINDER ASSEMBLY - MFD, 10 BOLT HUB
GRUPPO DEL CILINDRO DI STERZO - MFD, MOZZO A 10 BULLONI
VÉRIN DE DIRECTION DU PONT AVANT, MOYEU À 10 BOULONS
LENKZYLINDER - ALLRADANTRIEB, 10 NABENSCHRAUBEN

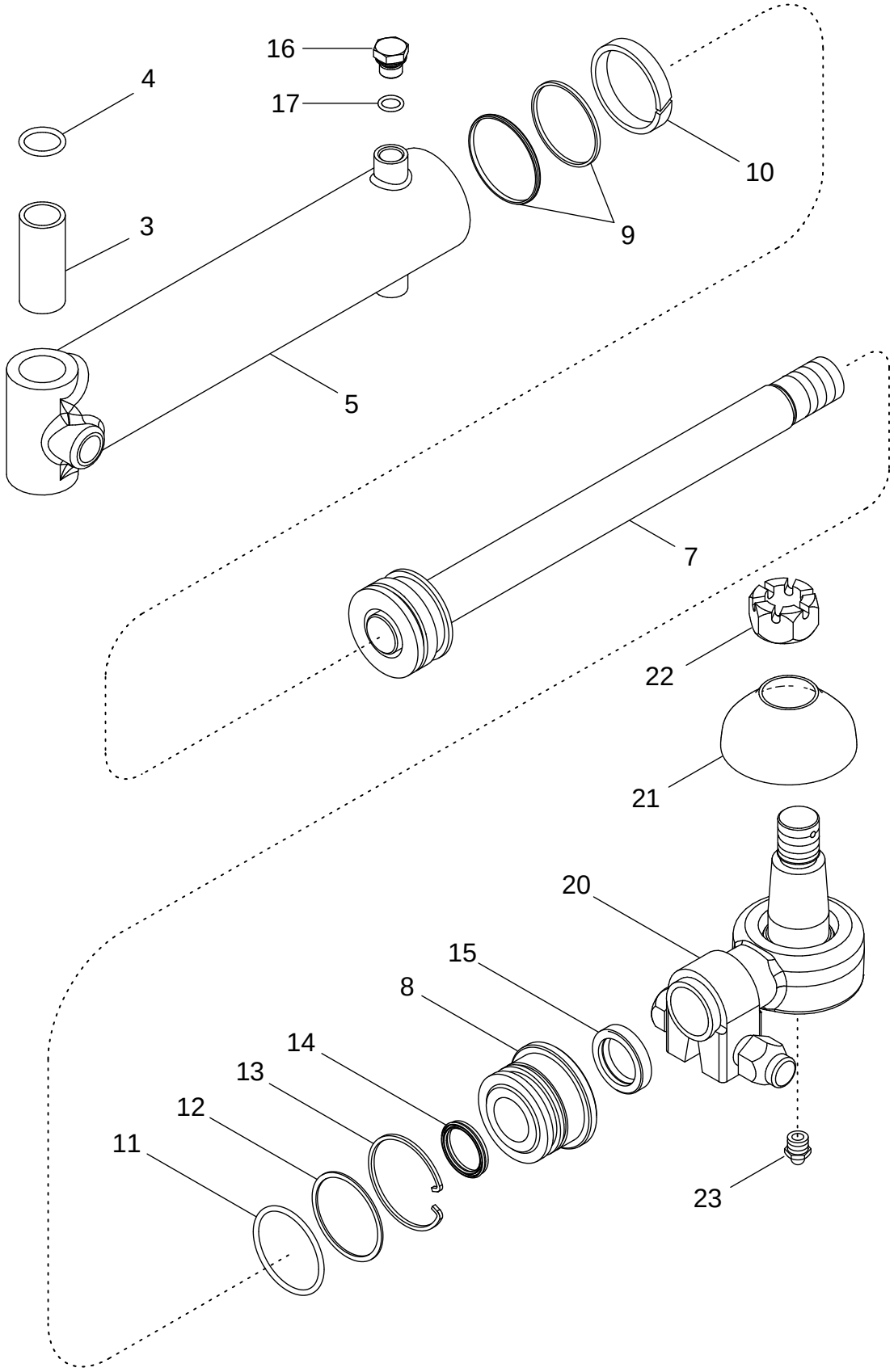

CONJUNTO DEL CILINDRO DE LA DIRECCIÓN - TDM, CUBO DE 10 PERNOS
CONJUNTO DO CILINDRO DA DIRECÇÃO - TMD, CUBO DE 10 PARAFUSOS
STUURCILINDER - MFD, NAAF MET 10 BOUTEN
STYRECYLINDERSAMLING - MFD, 10 BOLTNAV

R	N	P.N.	MOD	Q	Description Denominacion	Descrizione Denominação	Description Beschrijving	Bezeichnung Beskrivelse	L.C.
		294107A2		2	CYLINDER STEERING Inc. 3 - 17				
						CILINDRO, STERZO	VÉRIN DE DIRECTION	LENKZYLINDER	Z217
					CILINDRO DIRECTION	CILINDRO DE DIRECAO	CYLINDER STEERING	STYRECYLINDER	
3		314450A2		1	BUSHING, LARGE	ANELLO	BAGUE	BUCHSE, GROSS	Z312
					CASQUILLO	BUCHA	BUSHING, LARGE	BUSHING, LARGE	
4		238-5212		2	O-RING 7/8 ID x 1/8	ANELLO TOROIDALE	JOINT TORIQUE	O-RING	7176
					JUNTA HERMETICA	ANEL O	O-RING	O-RING	
5		NSS		1	NOT SERVICED SEPARATELY Tube				
						NON FORNITO SEPARAT	NON FOURNI SEPAREMI	KEIN ERSATZTEIL	064N
					NO SE REPARA SEPARA	NOT SERVICED SEPARA	NIET ALLEEN VERKRIJG	NOT SERVICED SEPARA	
7		295565A1		1	ROD, PISTON	ASTA DEL PISTONE	TIGE DE VERIN	KOLBENSTANGE	Z093
					VASTAGO CILINDRO	HASTE CILINDRO	STAAK	PLEJLSTANG	
8		327556A1		1	CAP CYLINDER END	CUSCIN.,GHIANDOLA	PALIER DE VERIN	ZYLINDERKAPPE	Z364
					PALIER	TAMPA CILINDRO	CAP CYLINDER END	CAP CYLINDER END	
		318849A1		1	KIT, GASKET Inc. 9 - 15	CONFEZIONE, GUARNIZ	JEU JOINTS ETANCHEIT	DICHTUNGSSATZ	3740
					EMPAQUE DE JUNTAS	JOGO DE JUNTAS	KIT, GASKET	PAKNINGS PAKKE	
9		NSS		1	NOT SERVICED SEPARATELY Seal				
						NON FORNITO SEPARAT	NON FOURNI SEPAREMI	KEIN ERSATZTEIL	064N
					NO SE REPARA SEPARA	NOT SERVICED SEPARA	NIET ALLEEN VERKRIJG	NOT SERVICED SEPARA	
10		NSS		1	NOT SERVICED SEPARATELY Ring, Wear				
						NON FORNITO SEPARAT	NON FOURNI SEPAREMI	KEIN ERSATZTEIL	064N
					NO SE REPARA SEPARA	NOT SERVICED SEPARA	NIET ALLEEN VERKRIJG	NOT SERVICED SEPARA	
11		NSS		1	NOT SERVICED SEPARATELY O-Ring				
						NON FORNITO SEPARAT	NON FOURNI SEPAREMI	KEIN ERSATZTEIL	064N
					NO SE REPARA SEPARA	NOT SERVICED SEPARA	NIET ALLEEN VERKRIJG	NOT SERVICED SEPARA	
12		NSS		1	NOT SERVICED SEPARATELY Ring, Backup				
						NON FORNITO SEPARAT	NON FOURNI SEPAREMI	KEIN ERSATZTEIL	064N
					NO SE REPARA SEPARA	NOT SERVICED SEPARA	NIET ALLEEN VERKRIJG	NOT SERVICED SEPARA	
13		NSS		1	NOT SERVICED SEPARATELY Ring, Retaining				
						NON FORNITO SEPARAT	NON FOURNI SEPAREMI	KEIN ERSATZTEIL	064N
					NO SE REPARA SEPARA	NOT SERVICED SEPARA	NIET ALLEEN VERKRIJG	NOT SERVICED SEPARA	
14		NSS		1	NOT SERVICED SEPARATELY Seal				
						NON FORNITO SEPARAT	NON FOURNI SEPAREMI	KEIN ERSATZTEIL	064N
					NO SE REPARA SEPARA	NOT SERVICED SEPARA	NIET ALLEEN VERKRIJG	NOT SERVICED SEPARA	
15		NSS		1	NOT SERVICED SEPARATELY Wiper				
						NON FORNITO SEPARAT	NON FOURNI SEPAREMI	KEIN ERSATZTEIL	064N
					NO SE REPARA SEPARA	NOT SERVICED SEPARA	NIET ALLEEN VERKRIJG	NOT SERVICED SEPARA	
16		220064A1		1	PLUG Inc. 17	TAPPO	BOUCHON	STOPFEN	050T
					TAPÓN	BUJÃO	PLUG	PROP	
17		637-63113		1	O-RING 11,3 ID x 2,2	ANELLO TOROIDALE	JOINT THORIQUE	DICHTRING	055A
					JUNTA HERMETICA	O-RING	O-RING	O-RING	
20		435664A1		2	BALL JOINT Inc. 21 - 23	GIUNTO SFERICO	ROTULE	KUGELGELENK	070G
					JUNTA DE ROTULA	JUNTA ESFÉRICA	KOGELGEWRICHT	KUGLELED	
21		317647A1		1	BOOT	CUFFIA	COIFFE	MANSCHETTE	330C
					CASQUETE	FOLE	KABELDOORGANG	MANCHET	
22		429-1314		1	SLOTTED NUT 7/8 NF; 8	DADO SCANALATO	ECROU A ENCOCHES	SCHLITZMUTTER	Z477
					TUERCA ENTALLADA	PORCA ENTALHADA	SLOTTED NUT	KÆRVMØTRIK	

STEERING CYLINDER ASSEMBLY - MFD, 10 BOLT HUB
GRUPPO DEL CILINDRO DI STERZO - MFD, MOZZO A 10 BULLONI
VÉRIN DE DIRECTION DU PONT AVANT, MOYEU À 10 BOULONS
LENKZYLINDER - ALLRADANTRIEB, 10 NABENSCHRAUBEN

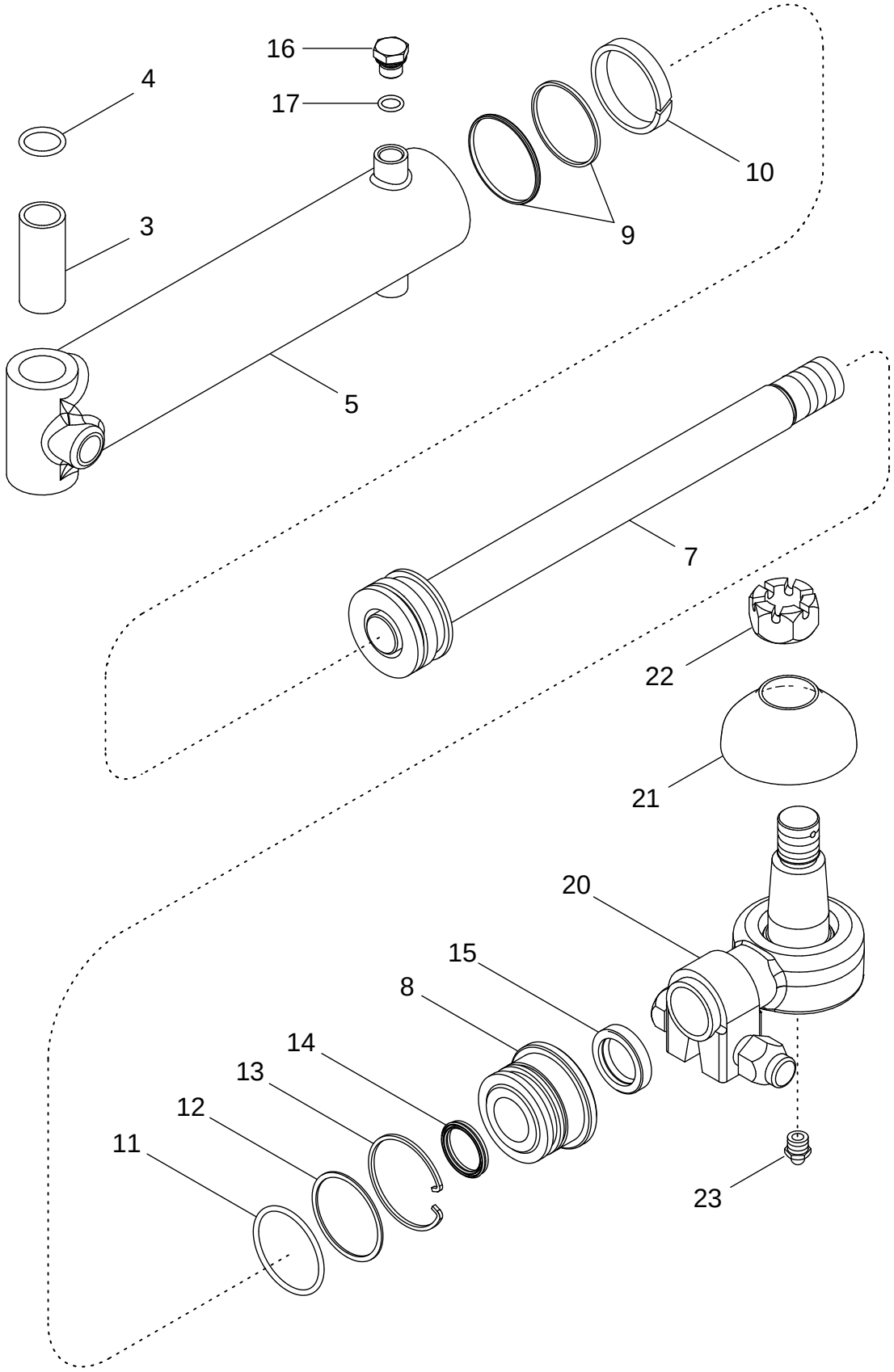

CONJUNTO DEL CILINDRO DE LA DIRECCIÓN - TDM, CUBO DE 10 PERNOS
CONJUNTO DO CILINDRO DA DIRECÇÃO - TMD, CUBO DE 10 PARAFUSOS
STUURCILINDER - MFD, NAAF MET 10 BOUTEN
STYRECYLINDERSAMLING - MFD, 10 BOLTNAV

R	N	P.N.	MOD	Q	Description Denominacion	Descrizione Denominação	Description Beschrijving	Bezeichnung Beskrivelse	L.C.
23		219-1		1	NIPPLE, LUBE 1/8 PT x 21/32				
						INGRASSATORE	GRAISSEUR	SCHMIERNIPPEL	060I
					ENGRASADOR	LUBRIFICADOR	SMEERNIPPEL	SMØRENIPPEL	

05-24		p1	11/04

STEERING CYLINDER ASSEMBLY - MFD, 12 BOLT HUB
GRUPPO DEL CILINDRO DI STERZO - MFD, MOZZO A 12 BULLONI
VÉRIN DE DIRECTION DU PONT AVANT, MOYEU À 12 BOULONS
LENKZYLINDER - ALLRADANTRIEB, 12 NABENSCHRAUBEN

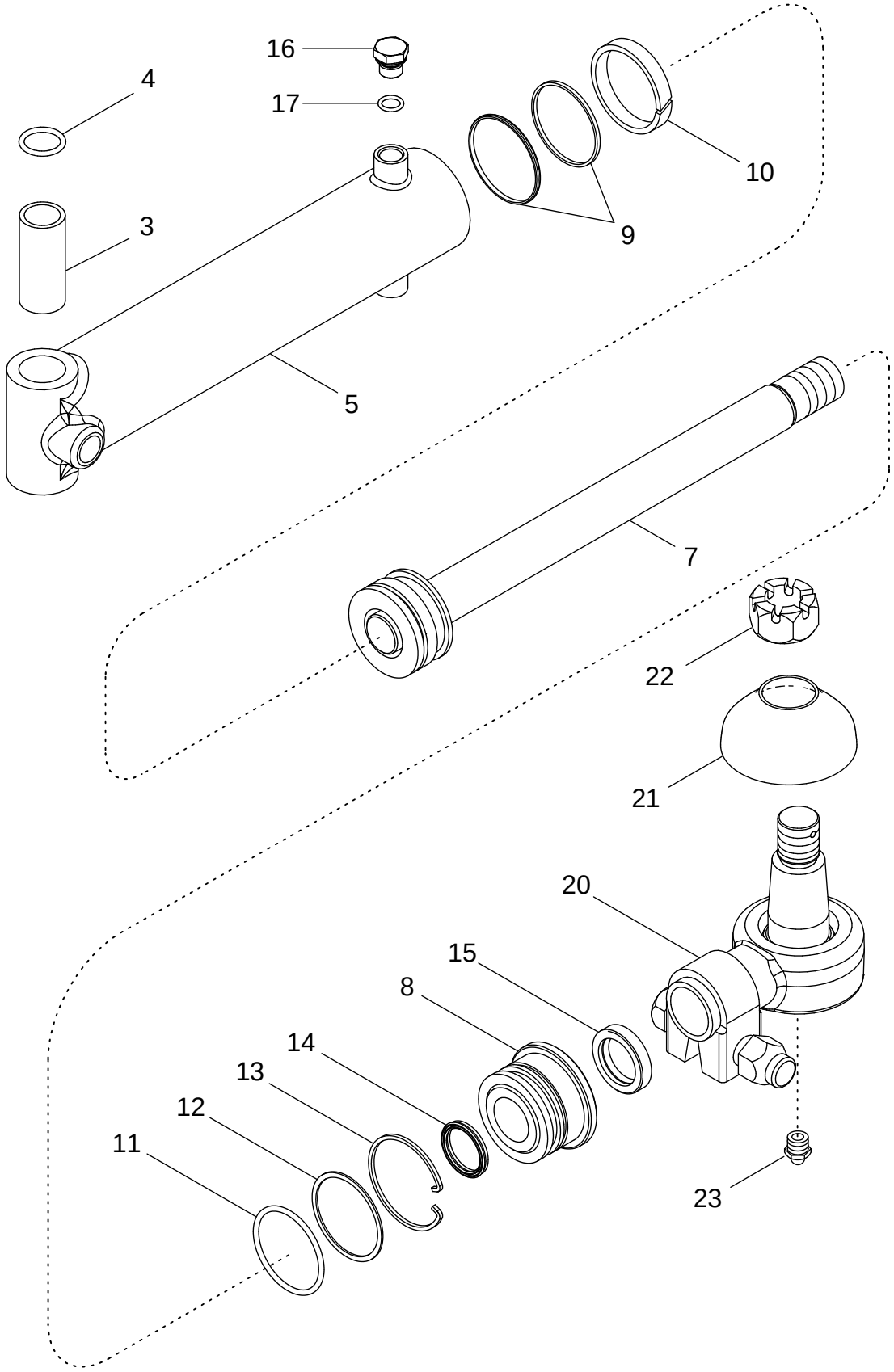

CONJUNTO DEL CILINDRO DE LA DIRECCIÓN - TDM, CUBO DE 12 PERNOS
CONJUNTO DO CILINDRO DA DIRECÇÃO - TMD, CUBO DE 12 PARAFUSOS
STUURCILINDER - MFD, NAAF MET 12 BOUTEN
STYRECYLINDERSAMLING - MFD, 12 BOLTNAV

R	N	P.N.	MOD	Q	Description Denominacion	Descrizione Denominação	Description Beschrijving	Bezeichnung Beskrivelse	L.C.
		293678A2		2	CYLINDER STEERING Inc. 3 - 17				
						CILINDRO, STERZO	VÉRIN DE DIRECTION	LENKZYLINDER	Z217
					CILINDRO DIRECTION	CILINDRO DE DIRECAO	CYLINDER STEERING	STYRECYLINDER	
3		**314450A2**		1	BUSHING, LARGE	ANELLO	BAGUE	BUCHSE, GROSS	Z312
					CASQUILLO	BUCHA	BUSHING, LARGE	BUSHING, LARGE	
4		**238-5212**		2	O-RING 7/8 ID x 1/8	ANELLO TOROIDALE	JOINT TORIQUE	O-RING	7176
					JUNTA HERMETICA	ANEL O	O-RING	O-RING	
5		**NSS**		1	NOT SERVICED SEPARATELY Tube				
						NON FORNITO SEPARAT	NON FOURNI SEPAREMI	KEIN ERSATZTEIL	064N
					NO SE REPARA SEPARA	NOT SERVICED SEPARA	NIET ALLEEN VERKRIJG	NOT SERVICED SEPARA	
7		**295564A1**		1	ROD, PISTON	ASTA DEL PISTONE	TIGE DE VERIN	KOLBENSTANGE	Z093
					VASTAGO CILINDRO	HASTE CILINDRO	STAAK	PLEJLSTANG	
8		**327554A1**		1	CAP CYLINDER END	CUSCIN.,GHIANDOLA	PALIER DE VERIN	ZYLINDERKAPPE	Z364
					PALIER	TAMPA CILINDRO	CAP CYLINDER END	CAP CYLINDER END	
		318850A1		1	KIT, GASKET Inc. 9 - 15	CONFEZIONE, GUARNIZ	JEU JOINTS ETANCHEIT	DICHTUNGSSATZ	3740
					EMPAQUE DE JUNTAS	JOGO DE JUNTAS	KIT, GASKET	PAKNINGS PAKKE	
9		**NSS**		1	NOT SERVICED SEPARATELY Seal				
						NON FORNITO SEPARAT	NON FOURNI SEPAREMI	KEIN ERSATZTEIL	064N
					NO SE REPARA SEPARA	NOT SERVICED SEPARA	NIET ALLEEN VERKRIJG	NOT SERVICED SEPARA	
10		**NSS**		1	NOT SERVICED SEPARATELY Ring, Wear				
						NON FORNITO SEPARAT	NON FOURNI SEPAREMI	KEIN ERSATZTEIL	064N
					NO SE REPARA SEPARA	NOT SERVICED SEPARA	NIET ALLEEN VERKRIJG	NOT SERVICED SEPARA	
11		**NSS**		1	NOT SERVICED SEPARATELY O-Ring				
						NON FORNITO SEPARAT	NON FOURNI SEPAREMI	KEIN ERSATZTEIL	064N
					NO SE REPARA SEPARA	NOT SERVICED SEPARA	NIET ALLEEN VERKRIJG	NOT SERVICED SEPARA	
12		**NSS**		1	NOT SERVICED SEPARATELY Ring, Backup				
						NON FORNITO SEPARAT	NON FOURNI SEPAREMI	KEIN ERSATZTEIL	064N
					NO SE REPARA SEPARA	NOT SERVICED SEPARA	NIET ALLEEN VERKRIJG	NOT SERVICED SEPARA	
13		**NSS**		1	NOT SERVICED SEPARATELY Ring, Retaining				
						NON FORNITO SEPARAT	NON FOURNI SEPAREMI	KEIN ERSATZTEIL	064N
					NO SE REPARA SEPARA	NOT SERVICED SEPARA	NIET ALLEEN VERKRIJG	NOT SERVICED SEPARA	
14		**NSS**		1	NOT SERVICED SEPARATELY Seal				
						NON FORNITO SEPARAT	NON FOURNI SEPAREMI	KEIN ERSATZTEIL	064N
					NO SE REPARA SEPARA	NOT SERVICED SEPARA	NIET ALLEEN VERKRIJG	NOT SERVICED SEPARA	
15		**NSS**		1	NOT SERVICED SEPARATELY Wiper				
						NON FORNITO SEPARAT	NON FOURNI SEPAREMI	KEIN ERSATZTEIL	064N
					NO SE REPARA SEPARA	NOT SERVICED SEPARA	NIET ALLEEN VERKRIJG	NOT SERVICED SEPARA	
16		**220064A1**		1	PLUG Inc. 17	TAPPO	BOUCHON	STOPFEN	050T
					TAPÓN	BUJÃO	PLUG	PROP	
17		**637-63113**		1	O-RING 11,3 ID x 2,2	ANELLO TOROIDALE	JOINT THORIQUE	DICHTRING	055A
					JUNTA HERMETICA	O-RING	O-RING	O-RING	
20		**435664A1**		2	BALL JOINT Inc. 21 - 23	GIUNTO SFERICO	ROTULE	KUGELGELENK	070G
					JUNTA DE ROTULA	JUNTA ESFÉRICA	KOGELGEWRICHT	KUGLELED	
21		**317647A1**		1	BOOT	CUFFIA	COIFFE	MANSCHETTE	330C
					CASQUETE	FOLE	KABELDOORGANG	MANCHET	
22		**429-1314**		1	SLOTTED NUT 7/8 NF; 8	DADO SCANALATO	ECROU A ENCOCHES	SCHLITZMUTTER	Z477
					TUERCA ENTALLADA	PORCA ENTALHADA	SLOTTED NUT	KÆRVMØTRIK	

05-24		p2	11/04

STEERING CYLINDER ASSEMBLY - MFD, 12 BOLT HUB
GRUPPO DEL CILINDRO DI STERZO - MFD, MOZZO A 12 BULLONI
VÉRIN DE DIRECTION DU PONT AVANT, MOYEU À 12 BOULONS
LENKZYLINDER - ALLRADANTRIEB, 12 NABENSCHRAUBEN

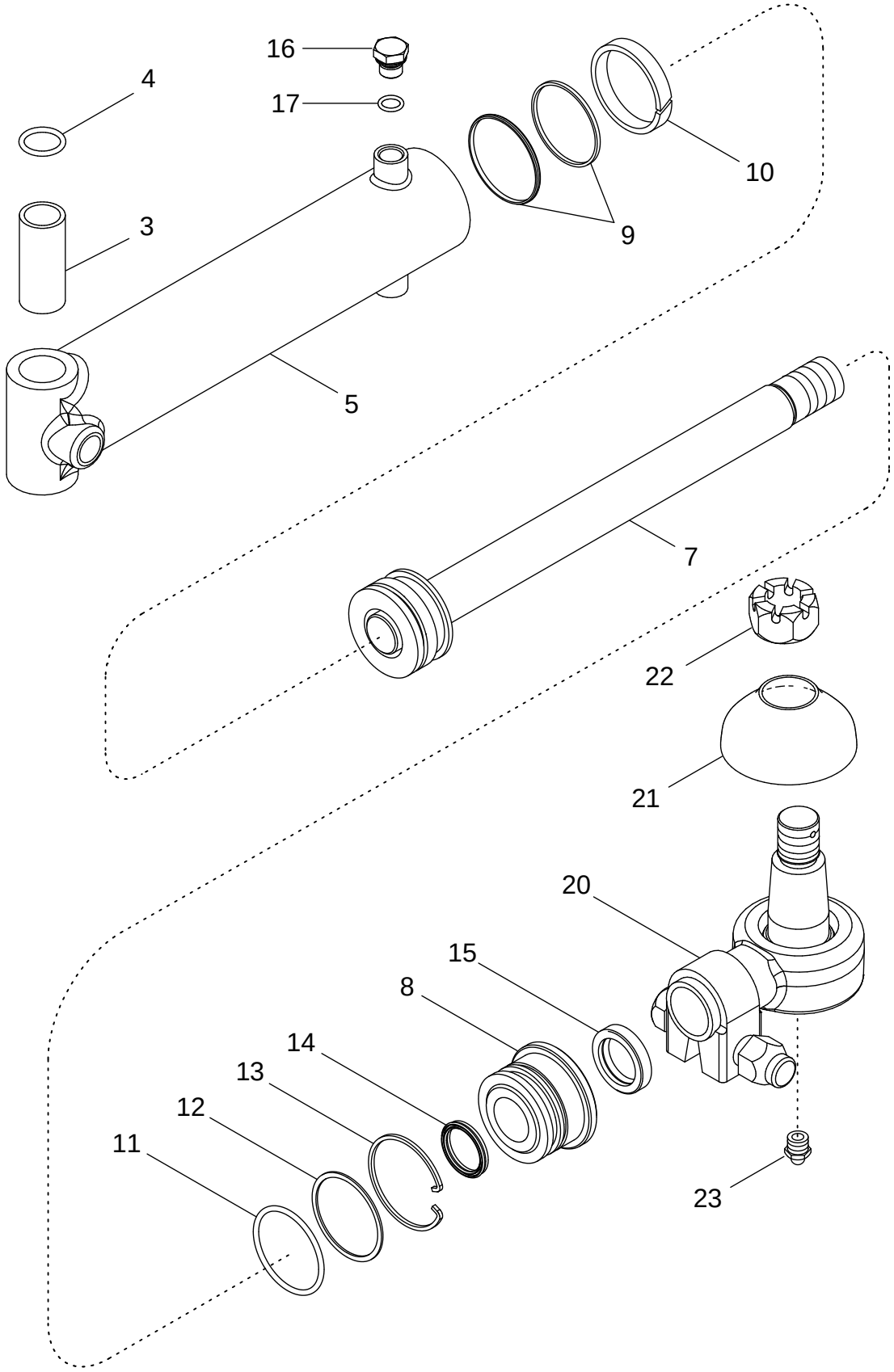

CONJUNTO DEL CILINDRO DE LA DIRECCIÓN - TDM, CUBO DE 12 PERNOS
CONJUNTO DO CILINDRO DA DIRECÇÃO - TMD, CUBO DE 12 PARAFUSOS
STUURCILINDER - MFD, NAAF MET 12 BOUTEN
STYRECYLINDERSAMLING - MFD, 12 BOLTNAV

R	N	P.N.	MOD	Q	Description Denominacion	Descrizione Denominação	Description Beschrijving	Bezeichnung Beskrivelse	L.C.
23		219-1		1	NIPPLE, LUBE 1/8 PT x 21/32				
						INGRASSATORE	GRAISSEUR	SCHMIERNIPPEL	060I
					ENGRASADOR	LUBRIFICADOR	SMEERNIPPEL	SMØRENIPPEL	

05-25		p1	11/04

FRONT WHEELS - MFD, 10 BOLT HUB
RUOTE ANTERIORI - MFD, MOZZO A 10 BULLONI
ROUES AVANT DU PONT AVANT, MOYEU À 10 BOULONS
VORDERRÄDER - ALLRADANTRIEB, 10 NABENSCHRAUBEN

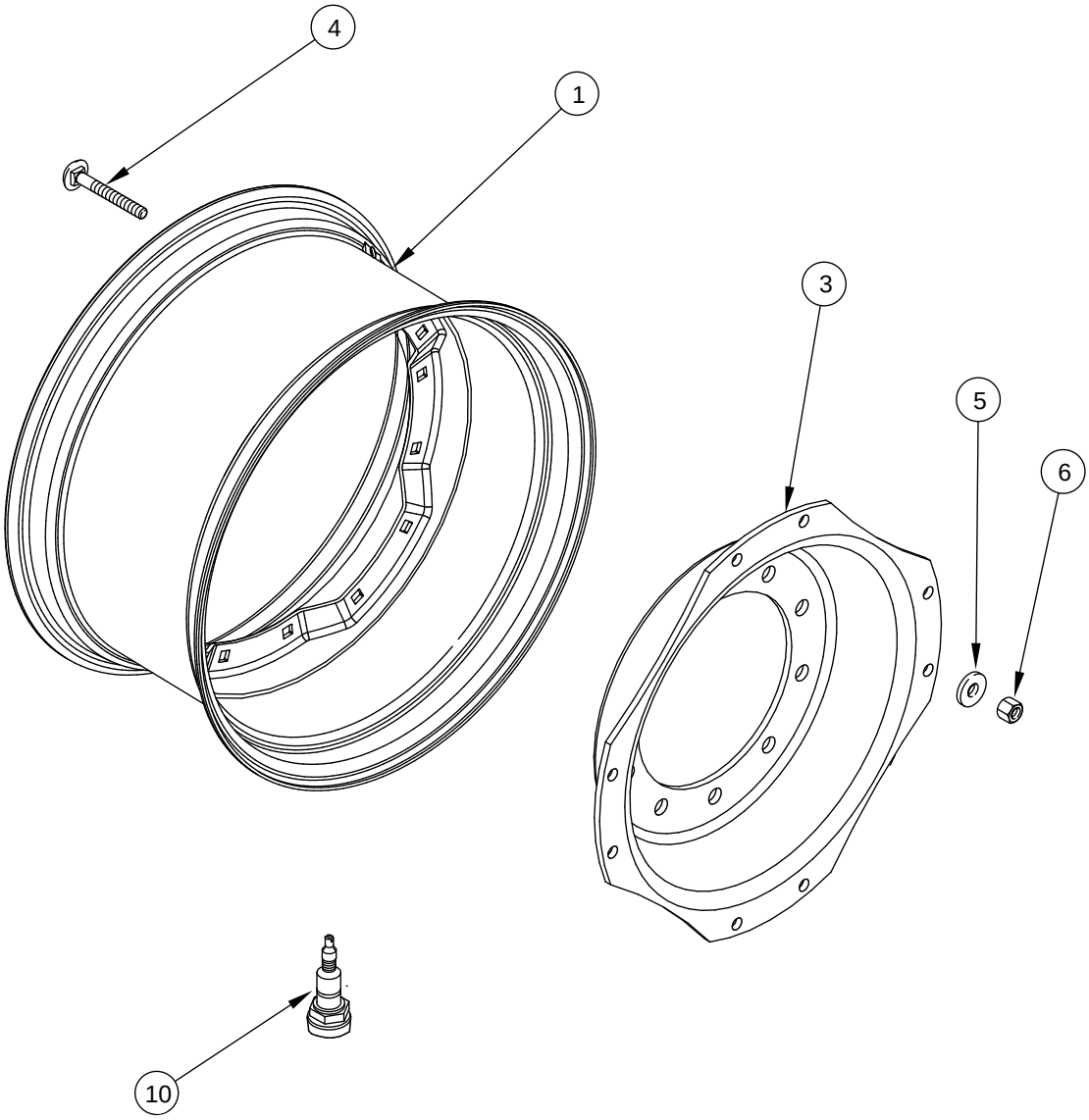

RUEDAS DELANTERAS - TDM, CUBO DE 10 PERNOS
RODAS DIANTEIRAS - TMD, CUBO DE 10 PARAFUSOS
VOORWIELEN - MFD, NAAF MET 10 BOUTEN
FORHJUL - MFD, 10 BOLTNAV

R	N	P.N.	MOD	Q	Description Denominacion	Descrizione Denominação	Description Beschrijving	Bezeichnung Beskrivelse	L.C.
	1	**259366A1**		2	WHEEL ASSY. W15lx28, Inc. 1 - 6				
						RUOTA COMPLETA	ROUE COMPLETE	KOMPLETTES RAD	P551
					RUEDA COMPLETA	RODA COMPLETA	VOLLEDIG WIEL	HJUL KOMPLET	
1		**188333A1**		1	RIM	CERCHIONE	JANTE	FELGE	7160
					RIN	JANTE	WIELVELG	RIFLE	
3		**240677A1**		1	FLANGE 10 Bolt	FLANGIA	FLASQUE	FLANSCH	070F
					BRIDA	FALANGE	FLENS	FLANGE	
4		**240686A1**		8	SCREW	VITE	VIS	SCHRAUBE	040V
					TORNILLO	PARAFUSO	SCHROEF	SKRUE	
5		**896-11016**		8	WASHER 17,5 x 30 x 4 mm	ROSETTA PIANA	RONDELLE	SCHEIBE	9720
					ARANDELA	ANILHA	SLUITRING	FLADSKIVE	
6		**829-1416**		8	NUT M16; 10	DADO	ECROU	MUTTER	5780
					TUERCA	PORCA	MOER	MØTRIK	
	2	**259367A2**		2	WHEEL W18lx28, Inc. 1 - 6	RUOTA VEICOLO	ROUE	RAD	160R
					RUEDA	RODA	WIEL	HJUL	
1		**188350A1**		1	RIM	CERCHIONE	JANTE	FELGE	7160
					RIN	JANTE	WIELVELG	RIFLE	
3		**240677A1**		1	FLANGE 10 bolt	FLANGIA	FLASQUE	FLANSCH	070F
					BRIDA	FALANGE	FLENS	FLANGE	
4		**240686A1**		8	SCREW	VITE	VIS	SCHRAUBE	040V
					TORNILLO	PARAFUSO	SCHROEF	SKRUE	
5		**896-11016**		8	WASHER 17,5 x 30 x 4 mm	ROSETTA PIANA	RONDELLE	SCHEIBE	9720
					ARANDELA	ANILHA	SLUITRING	FLADSKIVE	
6		**829-1416**		8	NUT M16; 10	DADO	ECROU	MUTTER	5780
					TUERCA	PORCA	MOER	MØTRIK	
	3	**259368A1**		2	WHEEL ASSY. W13x30, Inc. 1 - 6				
						RUOTA COMPLETA	ROUE COMPLETE	KOMPLETTES RAD	P551
					RUEDA COMPLETA	RODA COMPLETA	VOLLEDIG WIEL	HJUL KOMPLET	
1		**188338A1**		1	RIM	CERCHIONE	JANTE	FELGE	7160
					RIN	JANTE	WIELVELG	RIFLE	
3		**240677A1**		1	FLANGE 10 Bolt	FLANGIA	FLASQUE	FLANSCH	070F
					BRIDA	FALANGE	FLENS	FLANGE	
4		**240686A1**		8	SCREW	VITE	VIS	SCHRAUBE	040V
					TORNILLO	PARAFUSO	SCHROEF	SKRUE	
5		**896-11016**		8	WASHER 17,5 x 30 x 4 mm	ROSETTA PIANA	RONDELLE	SCHEIBE	9720
					ARANDELA	ANILHA	SLUITRING	FLADSKIVE	
6		**829-1416**		8	NUT M16; 10	DADO	ECROU	MUTTER	5780
					TUERCA	PORCA	MOER	MØTRIK	
	4	**259369A1**		2	WHEEL ASSY. W15x30, Inc. 1 - 6				
						RUOTA COMPLETA	ROUE COMPLETE	KOMPLETTES RAD	P551
					RUEDA COMPLETA	RODA COMPLETA	VOLLEDIG WIEL	HJUL KOMPLET	
1		**188341A1**		1	RIM	CERCHIONE	JANTE	FELGE	7160
					RIN	JANTE	WIELVELG	RIFLE	
3		**240677A1**		1	FLANGE 10 Bolt	FLANGIA	FLASQUE	FLANSCH	070F
					BRIDA	FALANGE	FLENS	FLANGE	

(1) For Tires 420/85R28, 16.9R28
(2) For Tires 600/65R28
(3) For Tires 380/85R30, 14.9R30
(4) For Tires 480/70R30, 420/90R30, 16.9R30

05-25		p2	11/04

FRONT WHEELS - MFD, 10 BOLT HUB
RUOTE ANTERIORI - MFD, MOZZO A 10 BULLONI
ROUES AVANT DU PONT AVANT, MOYEU À 10 BOULONS
VORDERRÄDER - ALLRADANTRIEB, 10 NABENSCHRAUBEN

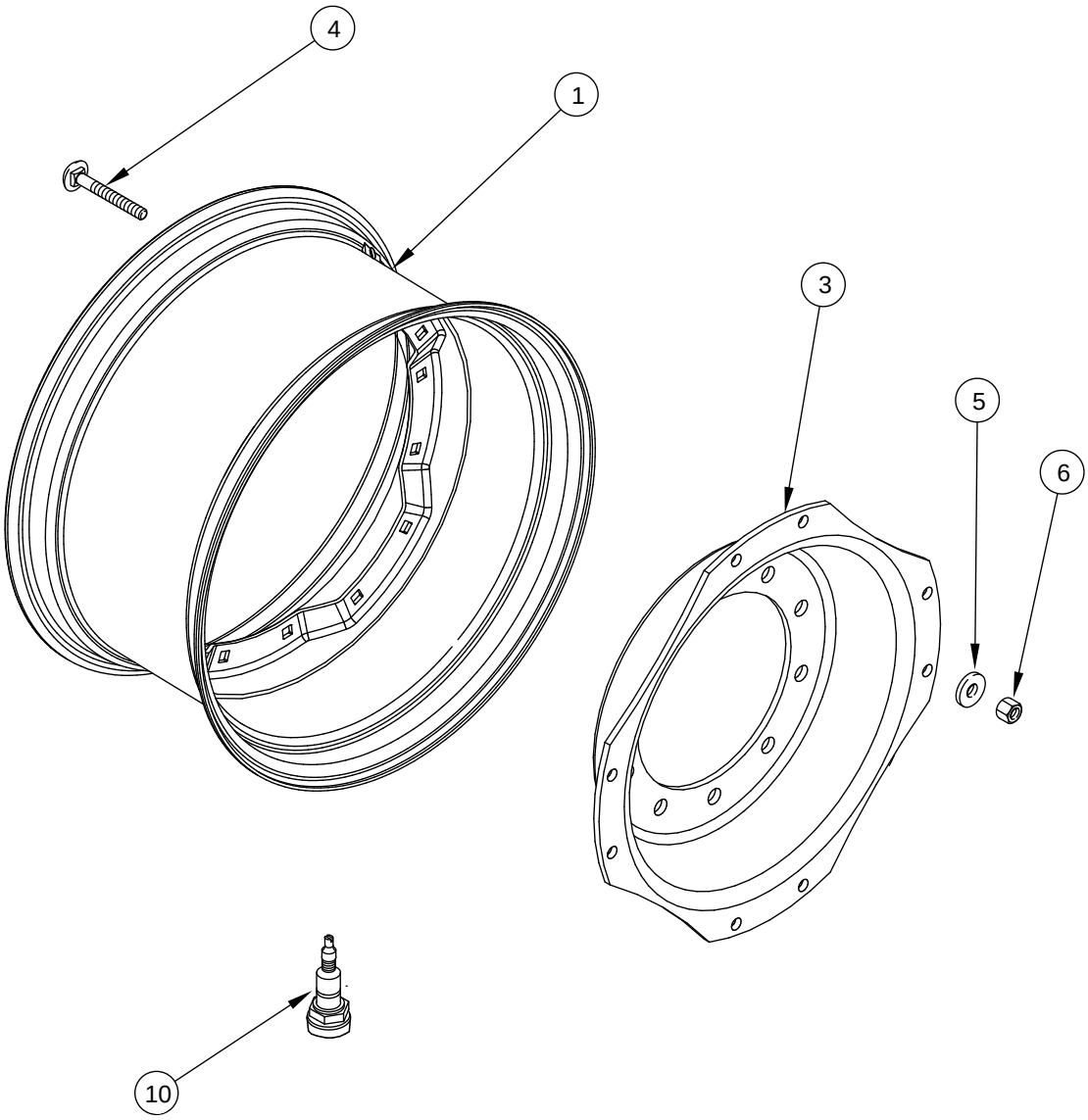

RUEDAS DELANTERAS - TDM, CUBO DE 10 PERNOS
RODAS DIANTEIRAS - TMD, CUBO DE 10 PARAFUSOS
VOORWIELEN - MFD, NAAF MET 10 BOUTEN
FORHJUL - MFD, 10 BOLTNAV

R	N	P.N.	MOD	Q	Description Denominacion	Descrizione Denominação	Description Beschrijving	Bezeichnung Beskrivelse	L.C.
4		240686A1		8	SCREW TORNILLO	VITE PARAFUSO	VIS SCHROEF	SCHRAUBE SKRUE	040V
5		896-11016		8	WASHER 17,5 x 30 x 4 mm ARANDELA	ROSETTA PIANA ANILHA	RONDELLE SLUITRING	SCHEIBE FLADSKIVE	9720
6		829-1416		8	NUT M16; 10 TUERCA	DADO PORCA	ECROU MOER	MUTTER MØTRIK	5780
	1	87401232		2	WHEEL W20Ax30, Inc. 1 - 6 RUEDA	RUOTA VEICOLO RODA	ROUE WIEL	RAD HJUL	160R
1		87402304		1	RIM RIN	CERCHIONE JANTE	JANTE WIELVEL	FELGE RIFLE	135C
3		240677A1		1	FLANGE 10 Bolt BRIDA	FLANGIA FALANGE	FLASQUE FLENS	FLANSCH FLANGE	070F
4		240686A1		8	SCREW TORNILLO	VITE PARAFUSO	VIS SCHROEF	SCHRAUBE SKRUE	040V
5		896-11016		8	WASHER 17,5 x 30 x 4 mm ARANDELA	ROSETTA PIANA ANILHA	RONDELLE SLUITRING	SCHEIBE FLADSKIVE	9720
6		829-1416		8	NUT M16; 10 TUERCA	DADO PORCA	ECROU MOER	MUTTER MØTRIK	5780
	2	259372A1		2	WHEEL ASSY. W13x34, Inc. 1 - 6 RUEDA COMPLETA	RUOTA COMPLETA RODA COMPLETA	ROUE COMPLETE VOLLEDIG WIEL	KOMPLETTES RAD HJUL KOMPLET	P551
1		231998A1		1	RIM RIN	CERCHIONE JANTE	JANTE WIELVELG	FELGE RIFLE	7160
3		259373A1		1	FLANGE 10 Bolt TAPA	FLANGIA FALANGE	FLASQUE FLENS	FLANSCH FLANGE	3360
4		240686A1		8	SCREW TORNILLO	VITE PARAFUSO	VIS SCHROEF	SCHRAUBE SKRUE	040V
5		896-11016		8	WASHER 17,5 x 30 x 4 mm ARANDELA	ROSETTA PIANA ANILHA	RONDELLE SLUITRING	SCHEIBE FLADSKIVE	9720
6		829-1416		8	NUT M16; 10 TUERCA	DADO PORCA	ECROU MOER	MUTTER MØTRIK	5780
	3	259370A1		2	WHEEL ASSY. W15Lx34, Inc. 1 - 6 RUEDA COMPLETA	RUOTA COMPLETA RODA COMPLETA	ROUE COMPLETE VOLLEDIG WIEL	KOMPLETTES RAD HJUL KOMPLET	P551
1		259416A1		1	RIM RIN	CERCHIONE JANTE	JANTE WIELVELG	FELGE RIFLE	7160
3		259373A1		1	FLANGE 10 Bolt TAPA	FLANGIA FALANGE	FLASQUE FLENS	FLANSCH FLANGE	3360
4		240686A1		8	SCREW TORNILLO	VITE PARAFUSO	VIS SCHROEF	SCHRAUBE SKRUE	040V
5		896-11016		8	WASHER 17,5 x 30 x 4 mm ARANDELA	ROSETTA PIANA ANILHA	RONDELLE SLUITRING	SCHEIBE FLADSKIVE	9720
6		829-1416		8	NUT M16; 10 TUERCA	DADO PORCA	ECROU MOER	MUTTER MØTRIK	5780

(1) For Tires 600/70R30
(2) For Tires 380/85R34, 14.9R34
(3) For Tires 480/70R34, 540/65R34

FRONT WHEELS - MFD, 10 BOLT HUB
RUOTE ANTERIORI - MFD, MOZZO A 10 BULLONI
ROUES AVANT DU PONT AVANT, MOYEU À 10 BOULONS
VORDERRÄDER - ALLRADANTRIEB, 10 NABENSCHRAUBEN

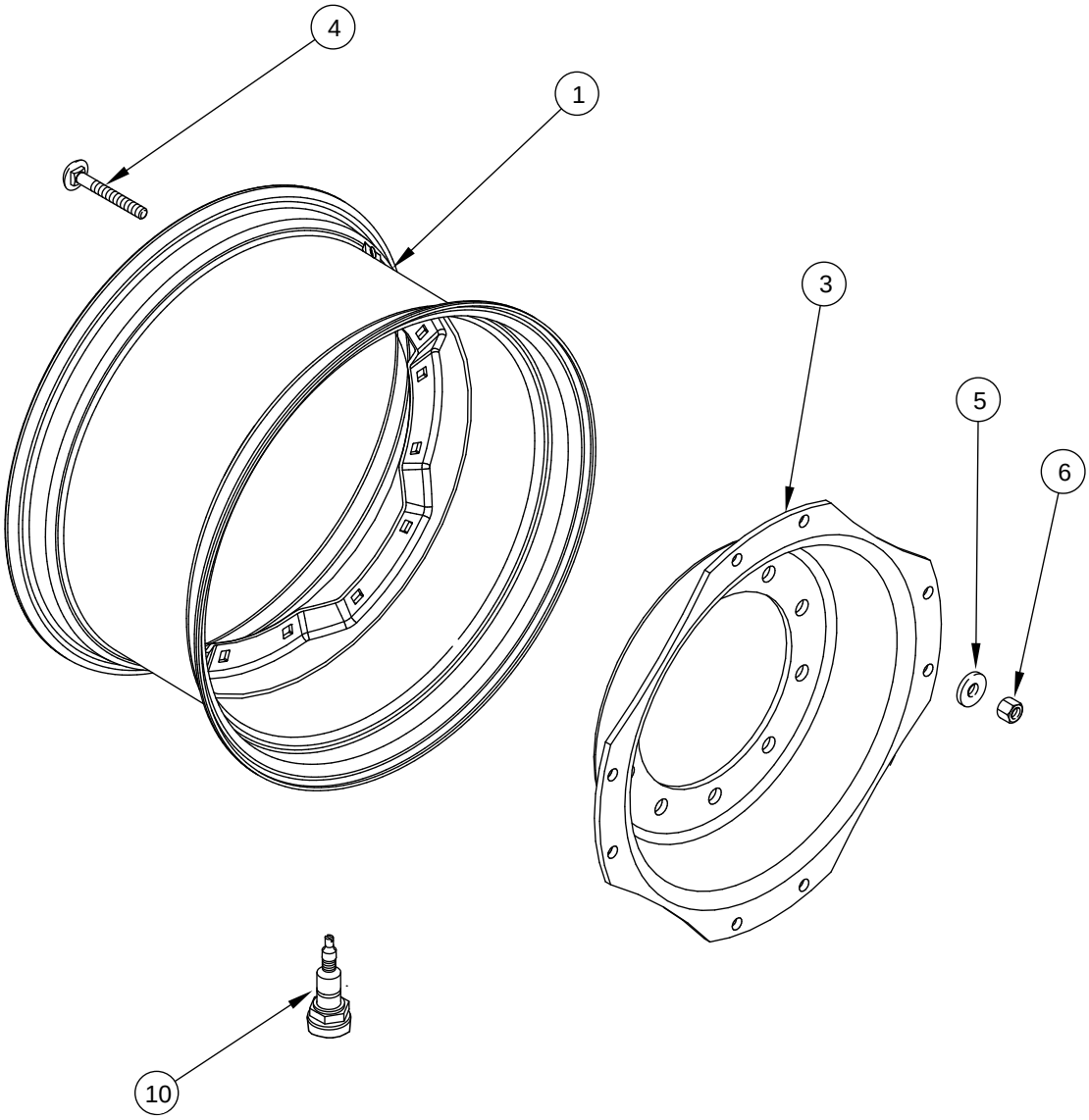

RUEDAS DELANTERAS - TDM, CUBO DE 10 PERNOS
RODAS DIANTEIRAS - TMD, CUBO DE 10 PARAFUSOS
VOORWIELEN - MFD, NAAF MET 10 BOUTEN
FORHJUL - MFD, 10 BOLTNAV

R	N	P.N.	MOD	Q	Description Denominacion	Descrizione Denominação	Description Beschrijving	Bezeichnung Beskrivelse	L.C.
	1	297354A1		2	WHEEL W10x38, Inc.1 - 6 RUEDA	RUOTA RODA	ROUE WIEL	RAD HJUL	9760
1		297355A1		1	RIM W10x38 RIN	CERCHIONE JANTE	JANTE WIELVELG	FELGE RIFLE	7160
3		297356A1		1	DISC DISCO	DISCO DISCO	DISQUE SCHIJF	SCHEIBE NAV	2700
4		240686A1		8	SCREW TORNILLO	VITE PARAFUSO	VIS SCHROEF	SCHRAUBE SKRUE	040V
5		896-11016		8	WASHER 17,5 x 30 x 4 mm ARANDELA	ROSETTA PIANA ANILHA	RONDELLE SLUITRING	SCHEIBE FLADSKIVE	9720
6		829-1416		8	NUT M16; 10 TUERCA	DADO PORCA	ECROU MOER	MUTTER MØTRIK	5780
	2	347616A1		2	WHEEL W12x38, Inc. 1 - 6 RUEDA	RUOTA RODA	ROUE WIEL	RAD HJUL	9760
1		347618A1		1	RIM RIN	CERCHIONE JANTE	JANTE WIELVELG	FELGE RIFLE	7160
3		297356A1		1	DISC 10 Bolt DISCO	DISCO DISCO	DISQUE SCHIJF	SCHEIBE NAV	2700
4		240686A1		8	SCREW TORNILLO	VITE PARAFUSO	VIS SCHROEF	SCHRAUBE SKRUE	040V
5		896-11016		8	WASHER 17,5 x 30 x 4 mm ARANDELA	ROSETTA PIANA ANILHA	RONDELLE SLUITRING	SCHEIBE FLADSKIVE	9720
6		829-1416		8	NUT M16; 10 TUERCA	DADO PORCA	ECROU MOER	MUTTER MØTRIK	5780
	3	396518A1		2	WHEEL W10Ax42, Inc. 1 - 6 RUEDA	RUOTA RODA	ROUE WIEL	RAD HJUL	9760
1		396520A1		1	RIM RIN	CERCHIONE JANTE	JANTE WIELVELG	FELGE RIFLE	7160
3		297356A1		1	DISC 10 Bolt DISCO	DISCO DISCO	DISQUE SCHIJF	SCHEIBE NAV	2700
4		240686A1		8	SCREW TORNILLO	VITE PARAFUSO	VIS SCHROEF	SCHRAUBE SKRUE	040V
5		896-11016		8	WASHER 17,5 x 30 x 4 mm ARANDELA	ROSETTA PIANA ANILHA	RONDELLE SLUITRING	SCHEIBE FLADSKIVE	9720
6		829-1416		8	NUT M16; 10 TUERCA	DADO PORCA	ECROU MOER	MUTTER MØTRIK	5780
10		A20058		2	VALVE STEM VASTAGO DE VALVULA	STELO DELLA VALVOLA HASTE DA VALVULA	TIGE DE SOUPAPE VALVE STEM	VENTILSCHAFT STILKVENTIL	P397

(1) For Tires 320/85R38
(2) For Tires 380/80R38
(3) For Tires 320/80R42

05-26		p1	11/04

FRONT WHEELS - MFD, 12 BOLT HUB
RUOTE ANTERIORI - MFD, MOZZO A 12 BULLONI
ROUES AVANT DU PONT AVANT, MOYEU À 12 BOULONS
VORDERRÄDER - ALLRADANTRIEB, 12 NABENSCHRAUBEN

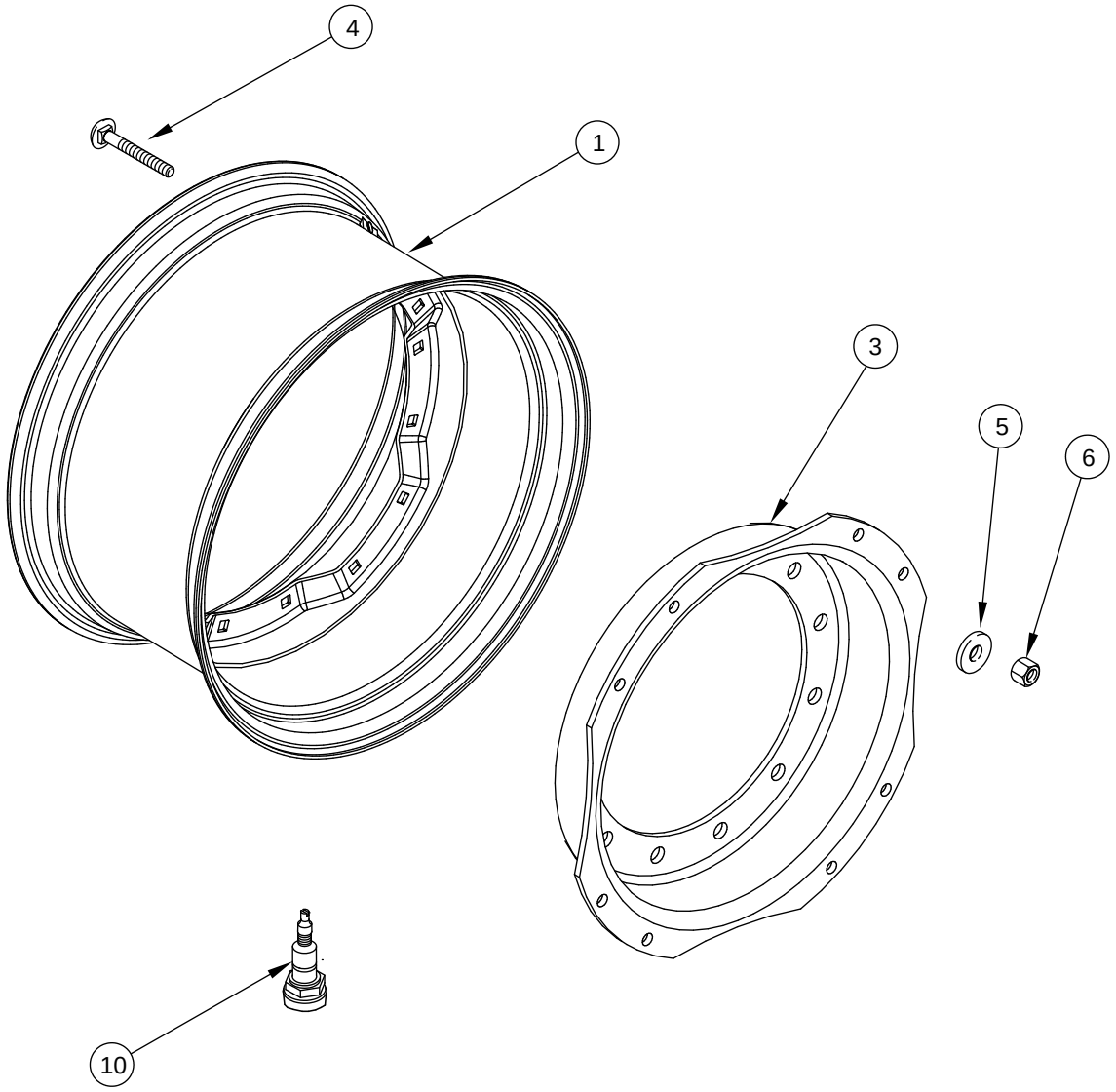

RUEDAS DELANTERAS - TDM, CUBO DE 12 PERNOS
RODAS DIANTEIRAS - TMD, CUBO DE 12 PARAFUSOS
VOORWIELEN - MFD, NAAF MET 12 BOUTEN
FORHJUL - MFD, 12 BOLTNAV

R	N	P.N.	MOD	Q	Description Denominacion	Descrizione Denominação	Description Beschrijving	Bezeichnung Beskrivelse	L.C.
	1	**188347A2**		2	WHEEL ASSY W18Lx28, Inc. 1 - 6				
						RUOTA COMPLETA	ROUE COMPLETE	RAD KOMPLETT	158R
					RUEDA COMPLETA	RODA COMPLETA	VOLLEDIG WIEL	HJUL KOMPLET	
1		**188350A2**		1	RIM	CERCHIONE	JANTE	FELGE	135C
					RIN	JANTE	WIELVEL	RIFLE	
3		**188328A1**		1	DISC, WHEEL 12 Bolt	DISCO RUOTA	VOILE DE ROUE	SCHEIBENRAD	091D
					DISCO RUEDA	DISCO DE RODA	VIELNAAF	NAVPLADE	
4		**240686A1**		8	SCREW	VITE	VIS	SCHRAUBE	040V
					TORNILLO	PARAFUSO	SCHROEF	SKRUE	
5		**896-11016**		8	WASHER 17,5 x 30 x 4 mm	ROSETTA PIANA	RONDELLE	SCHEIBE	9720
					ARANDELA	ANILHA	SLUITRING	FLADSKIVE	
6		**829-1416**		8	NUT M16; 10	DADO	ECROU	MUTTER	5780
					TUERCA	PORCA	MOER	MØTRIK	
	2	**188335A1**		2	WHEEL ASSY. W13x30, Inc. 1 - 6				
						RUOTA COMPLETA	ROUE COMPLETE	KOMPLETTES RAD	P551
					RUEDA COMPLETA	RODA COMPLETA	VOLLEDIG WIEL	HJUL KOMPLET	
1		**188338A1**		1	RIM	CERCHIONE	JANTE	FELGE	7160
					RIN	JANTE	WIELVELG	RIFLE	
3		**188328A1**		1	DISC, WHEEL 12 Bolt	DISCO RUOTA	VOILE DE ROUE	SCHEIBENRAD	091D
					DISCO RUEDA	DISCO DE RODA	VIELNAAF	NAVPLADE	
4		**240686A1**		8	SCREW	VITE	VIS	SCHRAUBE	040V
					TORNILLO	PARAFUSO	SCHROEF	SKRUE	
5		**896-11016**		8	WASHER 17,5 x 30 x 4 mm	ROSETTA PIANA	RONDELLE	SCHEIBE	9720
					ARANDELA	ANILHA	SLUITRING	FLADSKIVE	
6		**829-1416**		8	NUT M16; 10	DADO	ECROU	MUTTER	5780
					TUERCA	PORCA	MOER	MØTRIK	
	3	**188339A1**		2	WHEEL ASSY. W15x30 Inc. 1 - 6				
						RUOTA COMPLETA	ROUE COMPLETE	KOMPLETTES RAD	P551
					RUEDA COMPLETA	RODA COMPLETA	VOLLEDIG WIEL	HJUL KOMPLET	
1		**188341A1**		1	RIM	CERCHIONE	JANTE	FELGE	7160
					RIN	JANTE	WIELVELG	RIFLE	
3		**188328A1**		1	DISC, WHEEL 12 Bolt	DISCO RUOTA	VOILE DE ROUE	SCHEIBENRAD	091D
					DISCO RUEDA	DISCO DE RODA	VIELNAAF	NAVPLADE	
4		**240686A1**		8	SCREW	VITE	VIS	SCHRAUBE	040V
					TORNILLO	PARAFUSO	SCHROEF	SKRUE	
5		**896-11016**		8	WASHER 17,5 x 30 x 4 mm	ROSETTA PIANA	RONDELLE	SCHEIBE	9720
					ARANDELA	ANILHA	SLUITRING	FLADSKIVE	
6		**829-1416**		8	NUT M16; 10	DADO	ECROU	MUTTER	5780
					TUERCA	PORCA	MOER	MØTRIK	
	4	**87401233**		2	WHEEL W20x30	RUOTA VEICOLO	ROUE	RAD	160R
					RUEDA	RODA	WIEL	HJUL	
1		**87402304**		1	RIM	CERCHIONE	JANTE	FELGE	135C
					RIN	JANTE	WIELVEL	RIFLE	
3		**188328A1**		1	DISC, WHEEL 12 Bolt	DISCO RUOTA	VOILE DE ROUE	SCHEIBENRAD	091D
					DISCO RUEDA	DISCO DE RODA	VIELNAAF	NAVPLADE	

(1) For Tires 600/65R28
(2) For Tires 380/85R30, 14.9R30
(3) For Tires 480/85R30, 480/70R30, 420/90R30, 16.9R30,
(4) For Tires 660/70R30

05-26		p2	11/04

FRONT WHEELS - MFD, 12 BOLT HUB
RUOTE ANTERIORI - MFD, MOZZO A 12 BULLONI
ROUES AVANT DU PONT AVANT, MOYEU À 12 BOULONS
VORDERRÄDER - ALLRADANTRIEB, 12 NABENSCHRAUBEN

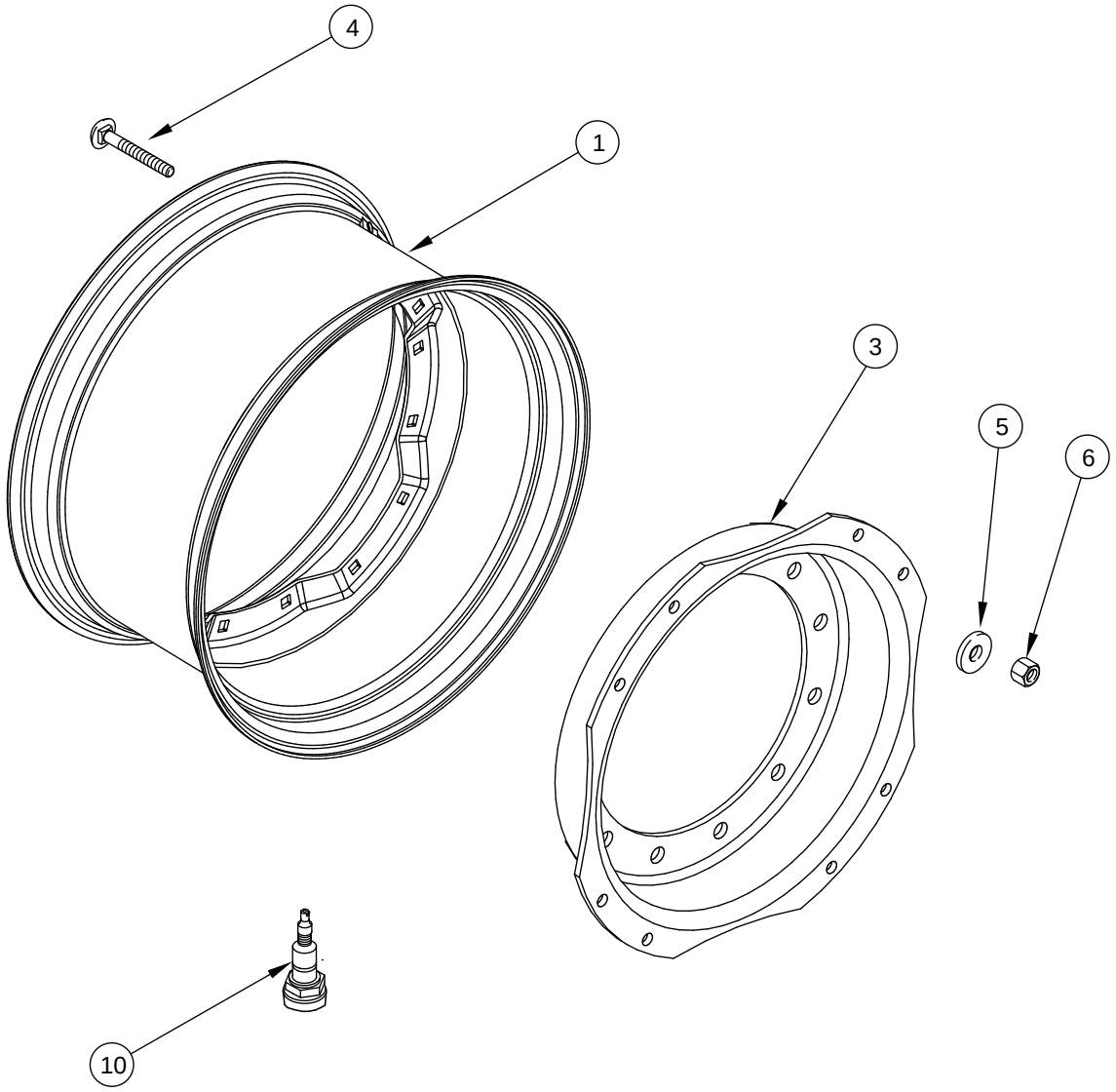

RUEDAS DELANTERAS - TDM, CUBO DE 12 PERNOS
RODAS DIANTEIRAS - TMD, CUBO DE 12 PARAFUSOS
VOORWIELEN - MFD, NAAF MET 12 BOUTEN
FORHJUL - MFD, 12 BOLTNAV

R	N	P.N.	MOD	Q	Description Denominacion	Descrizione Denominação	Description Beschrijving	Bezeichnung Beskrivelse	L.C.
4		240686A1		8	SCREW TORNILLO	VITE PARAFUSO	VIS SCHROEF	SCHRAUBE SKRUE	040V
5		896-11016		8	WASHER 17,5 x 30 x 4 mm ARANDELA	ROSETTA PIANA ANILHA	RONDELLE SLUITRING	SCHEIBE FLADSKIVE	9720
6		829-1416		8	NUT M16, 10 TUERCA	DADO PORCA	ECROU MOER	MUTTER MØTRIK	5780
	1	228305A1		2	WHEEL W10x34 RUEDA	RUOTA RODA	ROUE WIEL	RAD HJUL	9760
1		258255A1		1	RIM RIN	CERCHIONE JANTE	JANTE WIELVELG	FELGE RIFLE	7160
3		231999A1		1	FLANGE 12 Bolt TAPA	FLANGIA FALANGE	FLASQUE FLENS	FLANSCH FLANGE	3360
4		240686A1		8	SCREW TORNILLO	VITE PARAFUSO	VIS SCHROEF	SCHRAUBE SKRUE	040V
5		896-11016		8	WASHER 17,5 x 30 x 4 mm ARANDELA	ROSETTA PIANA ANILHA	RONDELLE SLUITRING	SCHEIBE FLADSKIVE	9720
6		829-1416		8	NUT M16, 10 TUERCA	DADO PORCA	ECROU MOER	MUTTER MØTRIK	5780
	2	231997A1		2	WHEEL ASSY. W13x34, Inc. 1 - 6 RUEDA COMPLETA	RUOTA COMPLETA RODA COMPLETA	ROUE COMPLETE VOLLEDIG WIEL	KOMPLETTES RAD HJUL KOMPLET	P551
1		231998A1		1	RIM RIN	CERCHIONE JANTE	JANTE WIELVELG	FELGE RIFLE	7160
3		231999A1		1	FLANGE 12 Bolt TAPA	FLANGIA FALANGE	FLASQUE FLENS	FLANSCH FLANGE	3360
4		240686A1		8	SCREW TORNILLO	VITE PARAFUSO	VIS SCHROEF	SCHRAUBE SKRUE	040V
5		896-11016		8	WASHER 17,5 x 30 x 4 mm ARANDELA	ROSETTA PIANA ANILHA	RONDELLE SLUITRING	SCHEIBE FLADSKIVE	9720
6		829-1416		8	NUT M16; 10 TUERCA	DADO PORCA	ECROU MOER	MUTTER MØTRIK	5780
	3	259371A1		2	WHEEL ASSY. W15lx34, Inc. 1 - 6 RUEDA COMPLETA	RUOTA COMPLETA RODA COMPLETA	ROUE COMPLETE VOLLEDIG WIEL	KOMPLETTES RAD HJUL KOMPLET	P551
1		259416A1		1	RIM RIN	CERCHIONE JANTE	JANTE WIELVELG	FELGE RIFLE	7160
3		231999A1		1	FLANGE 12 Bolt TAPA	FLANGIA FALANGE	FLASQUE FLENS	FLANSCH FLANGE	3360
4		240686A1		8	SCREW TORNILLO	VITE PARAFUSO	VIS SCHROEF	SCHRAUBE SKRUE	040V
5		896-11016		8	WASHER 17,5 x 30 x 4 mm ARANDELA	ROSETTA PIANA ANILHA	RONDELLE SLUITRING	SCHEIBE FLADSKIVE	9720
6		829-1416		8	NUT M16; 10 TUERCA	DADO PORCA	ECROU MOER	MUTTER MØTRIK	5780

(1) For Tires 320/85R34
(2) For Tires 380/85R34
(3) For Tires 480/70R34, 540/65R34

FRONT WHEELS - MFD, 12 BOLT HUB
RUOTE ANTERIORI - MFD, MOZZO A 12 BULLONI
ROUES AVANT DU PONT AVANT, MOYEU À 12 BOULONS
VORDERRÄDER - ALLRADANTRIEB, 12 NABENSCHRAUBEN

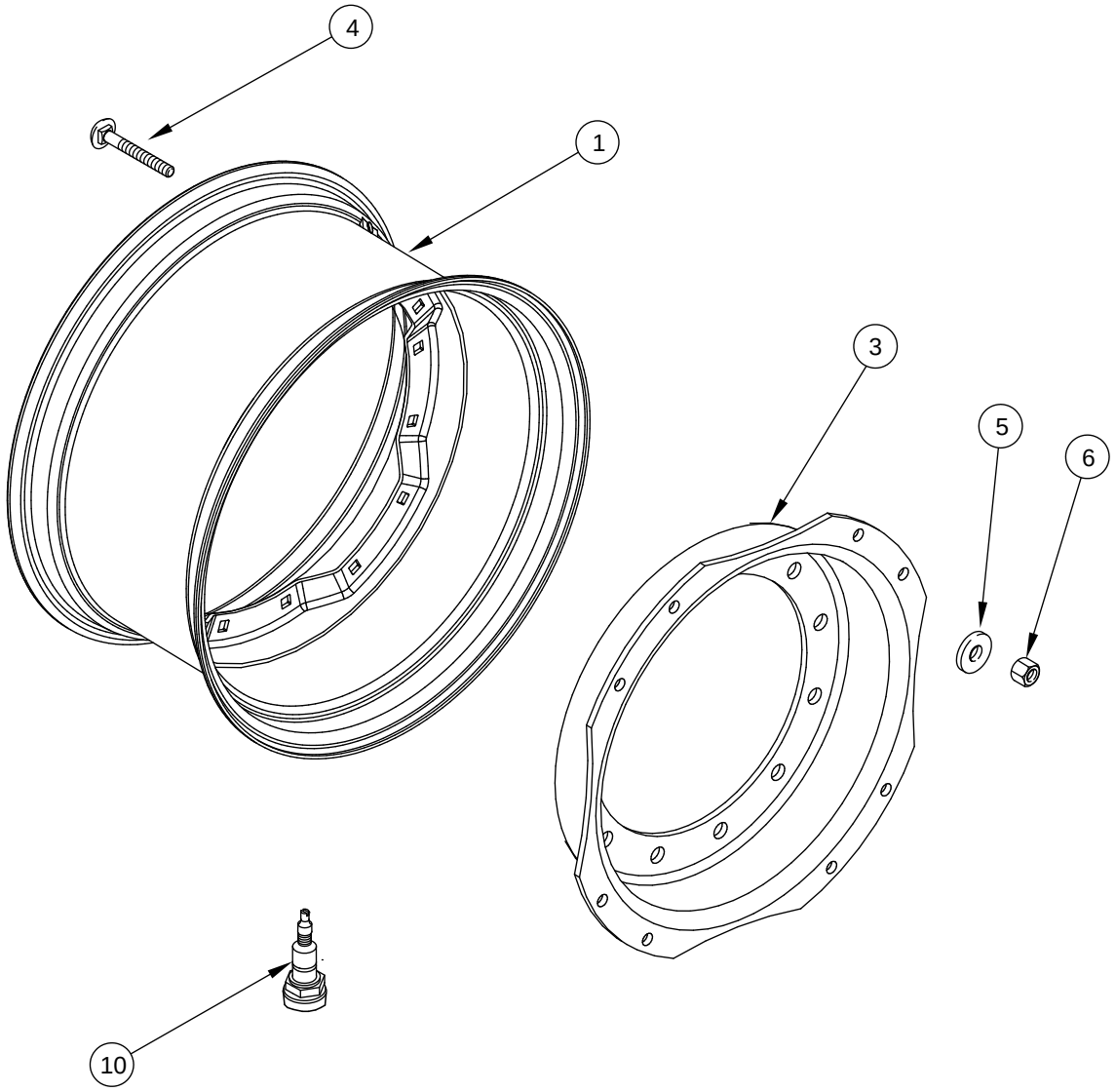

RUEDAS DELANTERAS - TDM, CUBO DE 12 PERNOS
RODAS DIANTEIRAS - TMD, CUBO DE 12 PARAFUSOS
VOORWIELEN - MFD, NAAF MET 12 BOUTEN
FORHJUL - MFD, 12 BOLTNAV

R	N	P.N.	MOD	Q	Description Denominacion	Descrizione Denominação	Description Beschrijving	Bezeichnung Beskrivelse	L.C.
	1	297465A1		2	WHEEL W10x38, Inc. 1 - 6 RUEDA	RUOTA RODA	ROUE WIEL	RAD HJUL	9760
1		297355A1		1	RIM RIN	CERCHIONE JANTE	JANTE WIELVELG	FELGE RIFLE	7160
3		297466A1		1	DISC 12 Bolt DISCO	DISCO DISCO	DISQUE SCHIJF	SCHEIBE NAV	2700
4		240686A1		8	SCREW TORNILLO	VITE PARAFUSO	VIS SCHROEF	SCHRAUBE SKRUE	040V
5		896-11016		8	WASHER 17,5 x 30 x 4 mm ARANDELA	ROSETTA PIANA ANILHA	RONDELLE SLUITRING	SCHEIBE FLADSKIVE	9720
6		829-1416		8	NUT M16; 10 TUERCA	DADO PORCA	ECROU MOER	MUTTER MØTRIK	5780
		347617A1		2	WHEEL W12x38, Inc. 1 - 6 RUEDA	RUOTA RODA	ROUE WIEL	RAD HJUL	9760
1		347618A1		1	RIM RIN	CERCHIONE JANTE	JANTE WIELVELG	FELGE RIFLE	7160
3		297466A1		1	DISC 12 Bolt DISCO	DISCO DISCO	DISQUE SCHIJF	SCHEIBE NAV	2700
4		240686A1		8	SCREW TORNILLO	VITE PARAFUSO	VIS SCHROEF	SCHRAUBE SKRUE	040V
5		896-11016		8	WASHER 17,5 x 30 x 4 mm ARANDELA	ROSETTA PIANA ANILHA	RONDELLE SLUITRING	SCHEIBE FLADSKIVE	9720
6		829-1416		8	NUT M16; 10 TUERCA	DADO PORCA	ECROU MOER	MUTTER MØTRIK	5780
	2	396519A1		2	WHEEL W10x42 RUEDA	RUOTA RODA	ROUE WIEL	RAD HJUL	9760
1		396520A1		1	RIM RIN	CERCHIONE JANTE	JANTE WIELVELG	FELGE RIFLE	7160
3		297466A1		1	DISC 12 Bolt DISCO	DISCO DISCO	DISQUE SCHIJF	SCHEIBE NAV	2700
4		240686A1		8	SCREW TORNILLO	VITE PARAFUSO	VIS SCHROEF	SCHRAUBE SKRUE	040V
5		896-11016		8	WASHER 17,5 x 30 x 4 mm ARANDELA	ROSETTA PIANA ANILHA	RONDELLE SLUITRING	SCHEIBE FLADSKIVE	9720
6		829-1416		8	NUT M16, 10 TUERCA	DADO PORCA	ECROU MOER	MUTTER MØTRIK	5780
10		A20058		2	VALVE STEM VASTAGO DE VALVULA	STELO DELLA VALVOLA HASTE DA VALVULA	TIGE DE SOUPAPE VALVE STEM	VENTILSCHAFT STILKVENTIL	P397

(1) For Tires 320/85R38
(2) For Tires 320/80R42

05-27		p1	11/04

SPACER - DUAL FRONT WHEELS
DISTANZIALE - RUOTE ANTERIORI DOPPIE
ENTRETOISE DES ROUES JUMELÉES AVANT
DISTANZSTÜCK - VORDERE ZWILLINGSRÄDER

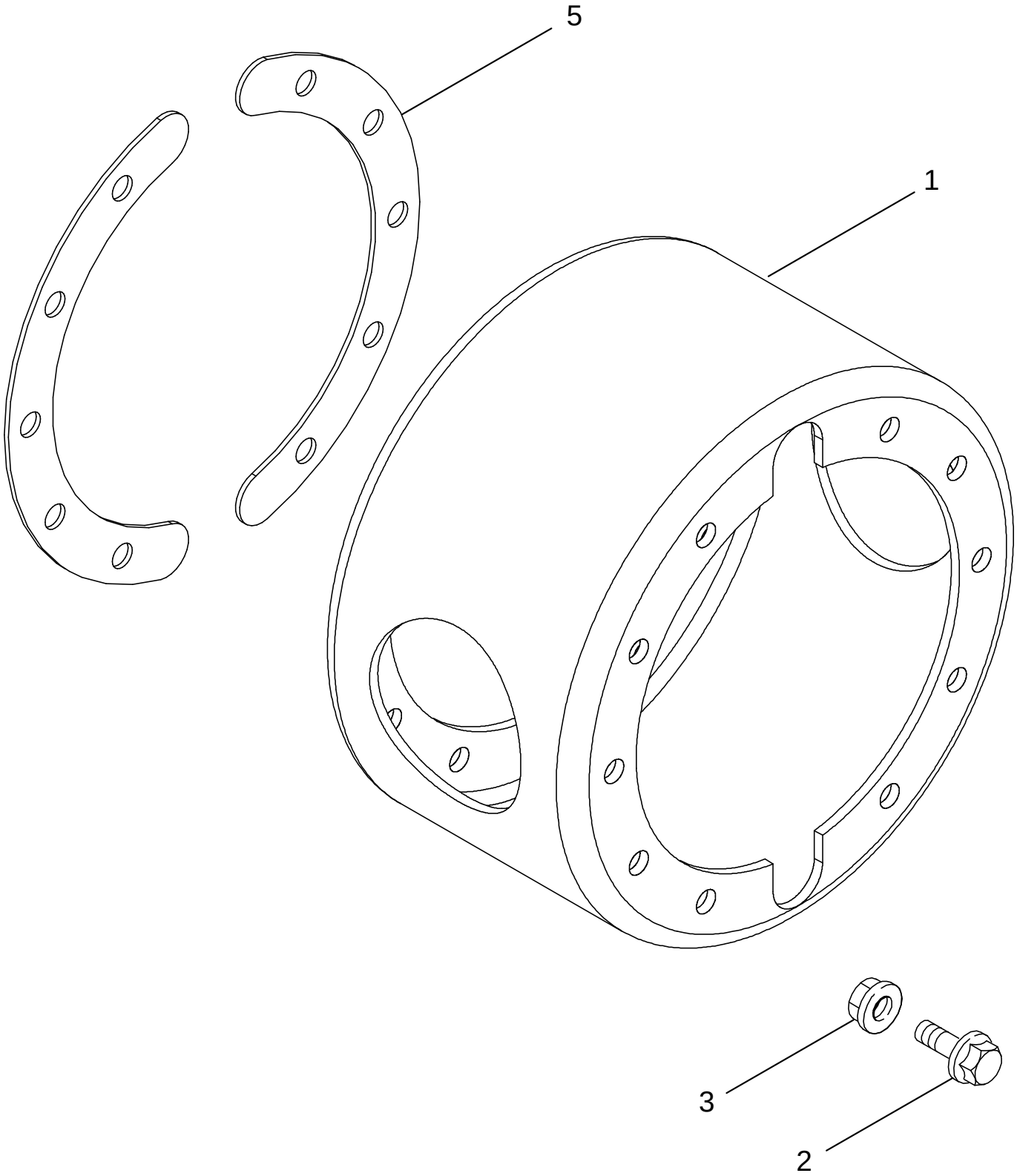

ESPACIADOR - RUEDAS DELANTERAS DOBLES
ESPAÇADOR - RODAS DIANTEIRAS DUPLAS
AFSTANDHOUDER - DUBBELE VOORWIELEN
MELLEMSTYKKE - DOBBELTE FORHJUL

R	N	P.N.	MOD	Q	Description Denominacion	Descrizione Denominação	Description Beschrijving	Bezeichnung Beskrivelse	L.C.
1		282189A1		2	SPACER 12 Inch SEPARADOR	DISTANZIALE ESPACADOR	ENTRETOISE AFSTANDSRING	DISTANZSTÜCK AFSTANDSSTYKKE	075D
2		283120A1		20	BOLT M20 x 45 TORNILLO	BULLONE PARAFUSO	BOULON BOUT	SCHAUBENBOLZEN SKRUE	140B
3		253212A1		20	NUT TUERCA	DADO PORCA	ECROU MOER	MUTTER MØTRIK	010D
1		282188A1		2	SPACER 16 Inch SEPARADOR	DISTANZIALE ESPACADOR	ENTRETOISE AFSTANDSRING	DISTANZSTÜCK AFSTANDSSTYKKE	075D
2		283120A1		20	BOLT M20 x 45 TORNILLO	BULLONE PARAFUSO	BOULON BOUT	SCHAUBENBOLZEN SKRUE	140B
3		253212A1		20	NUT TUERCA	DADO PORCA	ECROU MOER	MUTTER MØTRIK	010D
5		365372A1		4	SHIM Used With 34 Inch Wheel Only SUPLEMENTO	SPESSORE CALCO DE AFINACAO	CALE D'EPAISSEUR DIKTEPLAAT	EINSTELLSCHEIBCHEN MELLEMLAEG	198S

SECTION INDEX

06-01	TRANSMISSION DRIVE SHAFT
06-02	TRANSMISSION DROP BOX
06-03	SPEED TRANSMISSION - HOUSING, BSN AJB0355338
06-04	SPEED TRANSMISSION - HOUSING, BTW AJB0355338 & AJB0355923
06-05	SPEED TRANSMISSION - HOUSING, ASN AJB0355923
06-06	PLATE ASSEMBLY - VALVE MOUNTING, LEFT HAND SIDE
06-07	PLATE ASSEMBLY - VALVE MOUNTING, TOP
06-08	SPEED TRANSMISSION - INPUT SHAFT WITHOUT CREEP SPEED
06-09	SPEED TRANSMISSION - INPUT SHAFT WITH CREEP SPEED
06-10	SPEED TRANSMISSION - COUNTERSHAFT WITHOUT CREEP SPEED
06-11	SPEED TRANSMISSION - COUNTERSHAFT WITH CREEP SPEED
06-12	SPEED TRANSMISSION - OUTPUT SHAFT FRONT CLUTCH
06-13	SPEED TRANSMISSION - OUTPUT SHAFT REAR CLUTCH
06-14	RANGE TRANSMISSION - HOUSING, BSN AJB0355338
06-15	RANGE TRANSMISSION - HOUSING, BTW AJB0355338 & AJB0355923
06-16	RANGE TRANSMISSION - HOUSING, ASN AJB0355923
06-17	VALVE ASSY - INCHING
06-18	RANGE TRANSMISSION - INPUT SHAFT
06-19	RANGE TRANSMISSION - MASTER CLUTCH
06-20	RANGE TRANSMISSION - COUNTERSHAFT
06-21	TRANSMISSION - PINION SHAFT AND GEARS
06-22	TRANSMISSION - DIFFERENTIAL
06-23	RANGE TRANSMISSION - MFD CLUTCH
06-24	MFD AXLE - DRIVE SHAFT
06-25	TRANSMISSION CONTROL VALVE LOCATION
06-26	VALVE ASSEMBLY - TRANSMISSION CONTROL (450729A2)
06-27	VALVE ASSEMBLY - TRANSMISSION CONTROL (450721A2)
06-28	VALVE ASSEMBLY - TRANSMISSION CONTROL (450726A2)
06-29	VALVE ASSEMBLY - TRANSMISSION CONTROL (450728A2)
06-30	PEDAL - INCHING
06-31	LEVER ASSEMBLY - TRANSMISSION CONTROL
06-32	REAR AXLE - HOUSING
06-33	BREATHER - TRANSMISSION
06-34	REAR AXLE - PLANETARY, MX210, MX230 AND MX255
06-35	REAR AXLE - PLANETARY, MX285
06-36	REAR AXLE - 4 X 98 INCH, MX210 AND MX230
06-37	REAR AXLE - 4 X 98 INCH, MX255 AND MX285
06-38	TRANSMISSION - PUMP DRIVE
06-39	POWER TAKE OFF ASSEMBLY - INPUT SHAFT, BSN AJB0355026
06-40	POWER TAKE OFF ASSEMBLY - INPUT SHAFT, ASN AJB0355026
06-41	POWER TAKE OFF ASSEMBLY - REDUCTION GEAR, DUAL SPEED
06-42	POWER TAKE OFF ASSEMBLY - OUTPUT SHAFT, DUAL SPEED
06-43	POWER TAKE OFF ASSEMBLY - OUTPUT SHAFT, SINGLE SPEED, BSN AJB0355026
06-44	POWER TAKE OFF ASSEMBLY - OUTPUT SHAFT, SINGLE SPEED - ASN AJB0355026
06-45	POWER TAKE OFF ASSEMBLY - SHIELDS
06-46	SOLID STEEL REAR WHEELS
06-47	HUB ASSEMBLY - REAR WHEEL
06-48	SPACER - DUAL REAR WHEELS
06-49	REAR WHEEL WEIGHTS

TRANSMISSION DRIVE SHAFT
ALBERO DELLA TRASMISSIONE
ARBRE D'ENTRAÎNEMENT DE LA TRANSMISSION
GETRIEBE-ANTRIEBSWELLE

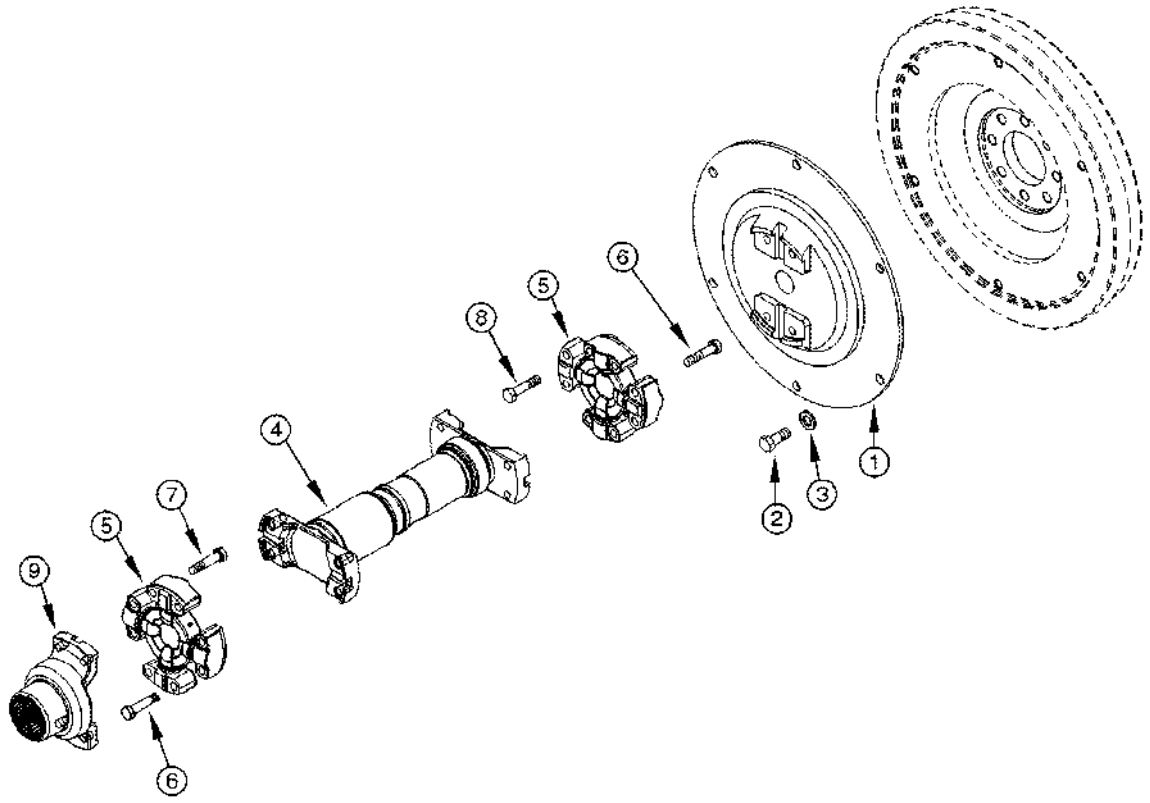

EJE DE TRANSMISIÓN
EIXO DE ACCIONAMENTO DA TRANSMISSÃO
AANDRIJFAS TRANSMISSIE
KARDANAKSEL

R	N	P.N.	MOD	Q	Description Denominacion	Descrizione Denominação	Description Beschrijving	Bezeichnung Beskrivelse	L.C.
1	1, 2	248408A2		1	PLATE, DRIVE DISCO DE ACCIONAMIEI	PIASTRA, TRASMISS PLACA DE COMANDO	DISQUE D'ENTRAÎNEME PLATE, DRIVE	MITNEHMERSCHEIBE KØREPLADE	P836
1	3, 4	248409A2		1	PLATE, DRIVE DISCO DE ACCIONAMIEI	PIASTRA, TRASMISS PLACA DE COMANDO	DISQUE D'ENTRAÎNEME PLATE, DRIVE	MITNEHMERSCHEIBE KØREPLADE	P836
2		628-12030		6	SCREW M12 x 30; 10,9 TORNILLO	VITE PARAFUSO	VIS SCHROEF	SCHRAUBE SKRUE	7450
3		896-12012		6	WASHER 13,5 x 24 x 3 mm ARANDELA	ROSETTA PIANA ANILHA	RONDELLE SLUITRING	SCHEIBE FLADSKIVE	9720
4	1, 2	259075A3		1	SHAFT, DRIVE Inc. 5, 6 ARBOL DE MANDO	ALBERO MOTORE EIXO COMANDO	ARBRE D'ENTRAINEMEN SHAFT, DRIVE	ANTRIEBSWELLE DRIVAKSEL	P754
4	3, 4	301842A2		1	SHAFT, DRIVE Inc. 5, 6 ARBOL DE MANDO	ALBERO MOTORE EIXO COMANDO	ARBRE D'ENTRAINEMEN SHAFT, DRIVE	ANTRIEBSWELLE DRIVAKSEL	P754
5	1, 2	259076A2		2	SPIDER, U-JOINT CRUCETA DE CARDÁN	STELLA CRUCETA DE CARDÁN	CROISILLON DE CARDA SPIDER, U-JOINT	KARDAN-KREUZSTÜCK U-DIFFERENTIALEKRYD	8165
5	3, 4	301844A2		2	SPIDER, U-JOINT CRUCETA DE CARDÁN	STELLA CRUCETA DE CARDÁN	CROISILLON DE CARDA SPIDER, U-JOINT	KARDAN-KREUZSTÜCK U-DIFFERENTIALEKRYD	8165
6	1, 2	828-10045		8	SCREW M10 x 45; 10.9 TORNILLO	VITE PARAFUSO	VIS SCHROEF	SCHRAUBE SKRUE	040V
6	3, 4	828-12050		8	SCREW M12 x 50; 10.9 TORNILLO	VITE PARAFUSO	VIS SCHROEF	SCHRAUBE SKRUE	7450
7	1, 2	828-10045		4	SCREW M10 x 45; 10.9 TORNILLO	VITE PARAFUSO	VIS SCHROEF	SCHRAUBE SKRUE	040V
7	3, 4	828-12050		4	SCREW M12 x 50; 10.9 TORNILLO	VITE PARAFUSO	VIS SCHROEF	SCHRAUBE SKRUE	7450
8	1, 2	828-10045		4	SCREW M10 x 45; 10.9 TORNILLO	VITE PARAFUSO	VIS SCHROEF	SCHRAUBE SKRUE	040V
8	3, 4	828-12050		4	SCREW M12 x 50; 10.9 TORNILLO	VITE PARAFUSO	VIS SCHROEF	SCHRAUBE SKRUE	7450
9	1, 2	259188A1		1	YOKE Input HORQUILLA	FORCELLA GARFO	MACHOIRE VORK	GABEL KRAFTOVERFØRINGSG/	9940
9	3, 4	301843A1		1	YOKE Input HORQUILLA	FORCELLA GARFO	MACHOIRE VORK	GABEL KRAFTOVERFØRINGSG/	9940

(1) MX210
(2) MX230
(3) MX255
(4) MX285

06-02		p1	12/02

TRANSMISSION DROP BOX
SCATOLA DI RINVIO DELLA TRASMISSIONE
BOÎTIER DE TRANSFERT DE LA TRANSMISSION
GETRIEBEGEHÄUSE

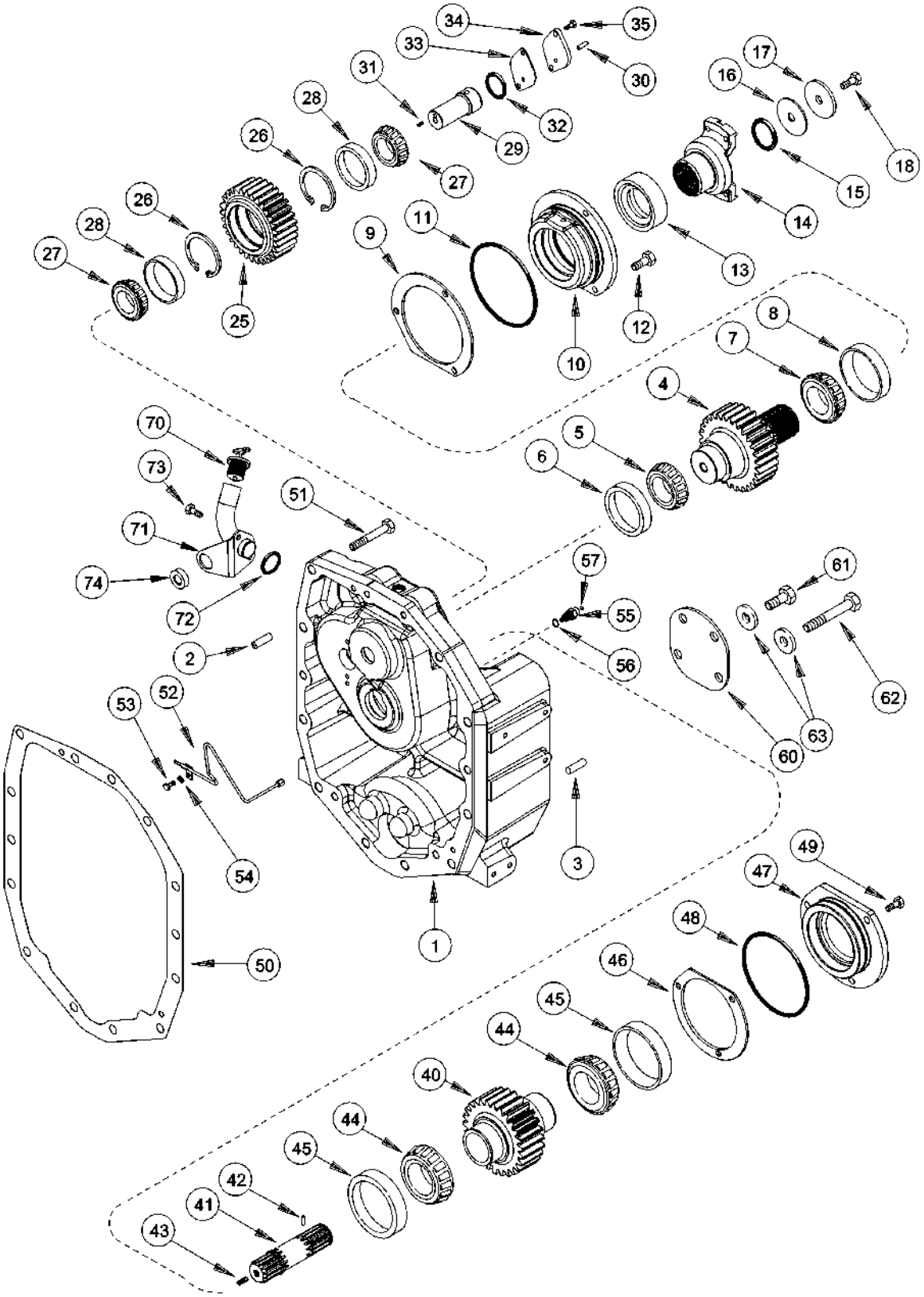

CAJA REDUCTORA DE LA TRANSMISIÓN
CAIXA DE QUEDA DA TRANSMISSÃO
HEFBAK TRANSMISSIE
KARDANFALDKASSE

R	N	P.N.	MOD	Q	Description Denominacion	Descrizione Denominação	Description Beschrijving	Bezeichnung Beskrivelse	L.C.
1		225171A6		1	HOUSING Inc. 2, 3 CAVIDAD	ALLOGGIAMENTO ALOJAMENTO	CARTER HUIS	GEHÄUSE HUS	014V
2		375362R1		2	PIN 1/2 x 1-3/8 PERNO	PERNO PERNO	AXE PEN	BOLZEN STIFT	080P
3		837-20040		2	PIN 20 x 40 mm PERNO	PERNO PERNO	AXE PEN	BOLZEN STIFT	080P
4		302553A1		1	SHAFT, GEAR 33T EJE DE PINIONS	ALBERO, INGRANAGGIO EIXO PINHAO	ARBRE DE PIGNONS SHAFT, GEAR	ZAHNRADWELLE GEARAKSEL	P722
5		659458R1		1	BEARING, CONE CONO	CONO DEL CUSCINETTO CONE	CONE DE ROULEMENT KEGEL	KEGEL LEJEKONUS	P690
6		105497H		1	BEARING, CUP PISTA DE RODAMIENTO	ANELLO CUSCINETTO ANILHA ROLAMENTO	CUVETTE ROULEMENT LAGER, CUP	LAGERSCHALE LEJERING	062A
7		105503H		1	BEARING, CONE CONO	CONO DEL CUSCINETTO CONE	CONE DE ROULEMENT KEGEL	KEGEL LEJEKONUS	P690
8		105496H		1	BEARING SET JUEGO DE CODINETES	CONFEZIONE, CUSCINE JOGO DE ROLAMENTOS	JEU DE ROULEMENTS BEARING SET	LAGERSATZ BEARING SET	P689
		275216A2		1	KIT, SHIM Inc. 9 JUEGO DE CALCES	KIT SPESSORE JUEGO DE CALCES	JEU DE CALES PACKAGE, SHIMS	EINSTELLSCHEIBEN, SC KIT, AFSTANDSSTYKKE	P688
9		341206A1		2	SHIM 0,152 mm SUPLEMENTO	SPESSORE CALCO DE AFINACAO	CALE D'EPAISSEUR DIKTEPLAAT	EINSTELLSCHEIBCHEN MELLEMLÆG	7770
9		341205A1		2	SHIM 0,178 mm SUPLEMENTO	SPESSORE CALCO DE AFINACAO	CALE D'EPAISSEUR DIKTEPLAAT	EINSTELLSCHEIBCHEN MELLEMLÆG	7770
9		275214A1		2	SHIM 0,203 mm SUPLEMENTO	SPESSORE CALCO DE AFINACAO	CALE D'EPAISSEUR DIKTEPLAAT	EINSTELLSCHEIBCHEN MELLEMLÆG	7770
9		228267A1		2	SHIM 0,356 mm SUPLEMENTO	SPESSORE CALCO DE AFINACAO	CALE D'EPAISSEUR DIKTEPLAAT	EINSTELLSCHEIBCHEN MELLEMLÆG	7770
9		228270A1		2	SHIM 0,635 mm SUPLEMENTO	SPESSORE CALCO DE AFINACAO	CALE D'EPAISSEUR DIKTEPLAAT	EINSTELLSCHEIBCHEN MELLEMLÆG	7770
10		221240A4		1	CAGE JAULA	GABBIA GAIOLA	CAGE CAGE	KÄFIG KUGLEHOLDER	1270
11		238-5161		1	O-RING 5-7/16 ID x 3/32 JUNTA HERMETICA	ANELLO TOROIDALE O-RING	JOINT THORIQUE O-RING	DICHTRING O-RING	055A
12		339770A1		3	SCREW TORNILLO	VITE PARAFUSO	VIS SCHROEF	SCHRAUBE SKRUE	7450
13		225820A1		1	SEAL, OIL JUNTA DE ACEITE	PARAOLIO VEDADOR DE OLEO	JOINT D'HUILE OIL-SEAL	ÖLDICHTUNG OLIESEGL	P278
14	1, 2	259188A1		1	YOKE HORQUILLA	FORCELLA GARFO	MACHOIRE VORK	GABEL KRAFTOVERFØRINGSG/	9940
14	3, 4	301843A1		1	YOKE HORQUILLA	FORCELLA GARFO	MACHOIRE VORK	GABEL KRAFTOVERFØRINGSG/	9940
15		238-5225		1	O-RING 1-7/8 ID x 1/8 JUNTA HERMETICA	ANELLO TOROIDALE ANEL O	JOINT TORIQUE O-RING	O-RING O-RING	7176
		276639A1		1	KIT, SHIM Inc. 16 JUEGO DE CALCES	KIT SPESSORE JUEGO DE CALCES	JEU DE CALES PACKAGE, SHIMS	EINSTELLSCHEIBEN, SC KIT, AFSTANDSSTYKKE	P688

(1) MX210
(2) MX230
(3) MX255
(4) MX285

TRANSMISSION DROP BOX
SCATOLA DI RINVIO DELLA TRASMISSIONE
BOÎTIER DE TRANSFERT DE LA TRANSMISSION
GETRIEBEGEHÄUSE

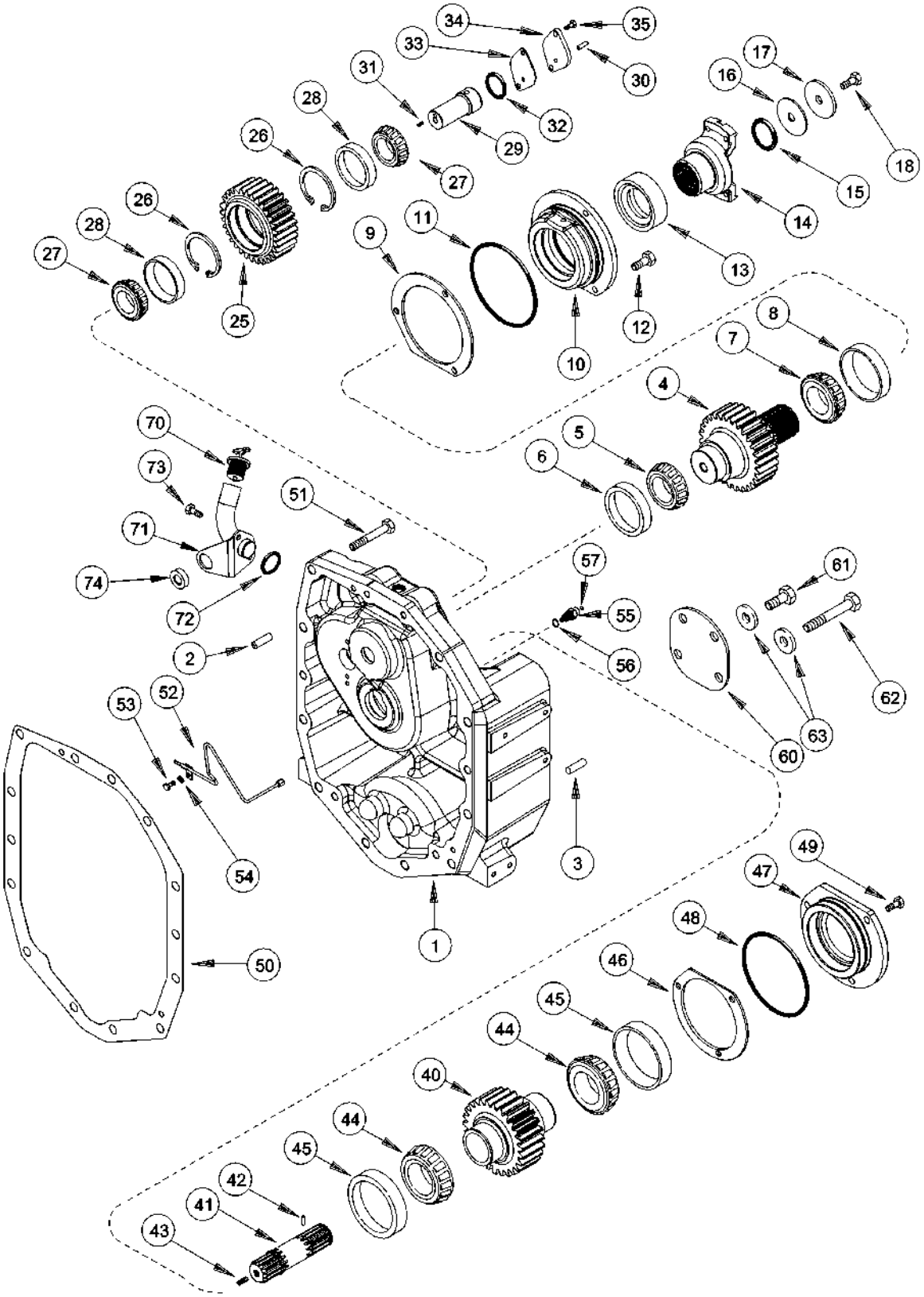

CAJA REDUCTORA DE LA TRANSMISIÓN
CAIXA DE QUEDA DA TRANSMISSÃO
HEFBAK TRANSMISSIE
KARDANFALDKASSE

R	N	P.N.	MOD	Q	Description Denominacion	Descrizione Denominação	Description Beschrijving	Bezeichnung Beskrivelse	L.C.
16		276638A1		2	SHIM 0,203 mm SUPLEMENTO	SPESSORE CALCO DE AFINACAO	CALE D'EPAISSEUR DIKTEPLAAT	EINSTELLSCHEIBCHEN MELLEMLÆG	7770
16		230486A1		2	SHIM 0,356 mm SUPLEMENTO	SPESSORE CALCO DE AFINACAO	CALE D'EPAISSEUR DIKTEPLAAT	EINSTELLSCHEIBCHEN MELLEMLÆG	7770
16		230487A1		2	SHIM 0,508 mm SUPLEMENTO	SPESSORE CALCO DE AFINACAO	CALE D'EPAISSEUR DIKTEPLAAT	EINSTELLSCHEIBCHEN MELLEMLÆG	7770
16		230488A1		2	SHIM 0,559 mm SUPLEMENTO	SPESSORE CALCO DE AFINACAO	CALE D'EPAISSEUR DIKTEPLAAT	EINSTELLSCHEIBCHEN MELLEMLÆG	7770
16		230490A1		2	SHIM 0,635 mm SUPLEMENTO	SPESSORE CALCO DE AFINACAO	CALE D'EPAISSEUR DIKTEPLAAT	EINSTELLSCHEIBCHEN MELLEMLÆG	7770
17		230497A1		1	WASHER ARANDELA	ROSETTA PIANA ANILHA	RONDELLE SLUITRING	SCHEIBE FLADSKIVE	9720
18		628-16035		1	SCREW M16 x 35; 10,9 TORNILLO	VITE PARAFUSO	VIS SCHROEF	SCHRAUBE SKRUE	040V
25		302554A1		1	SHAFT, GEAR 35 T EJE DE PINIONS	ALBERO, INGRANAGGIO EIXO PINHAO	ARBRE DE PIGNONS SHAFT, GEAR	ZAHNRADWELLE GEARAKSEL	P722
26		101-21325		2	RING No. 325 ANILLO	ANELLO ANEL	ANNEAU RING	RING RING	7175
27		364463C91		2	BEARING, CONE CONO	CONO DEL CUSCINETTO CONE	CONE DE ROULEMENT KEGEL	LAGERKONUS LEJEKONUS	237C
28		364462C1		2	BEARING SET JUEGO DE CODINETES	CONFEZIONE, CUSCINE JOGO DE ROLAMENTOS	JEU DE ROULEMENTS BEARING SET	LAGERSATZ BEARING SET	P689
29		228304A2		1	SHAFT ASSY. Inc. 30,31 ARBOL (CONJUNTO)	ALBERO, COMPLESSIVO EIXO CONJUNTO	ARBRE (ASSEMBLE) SHAFT ASSY.	WELLE (KPLT.) SHAFT ASSY.	P431
30		837-8020		1	PIN 8 x 20 mm PERNO	PERNO PERNO	AXE PEN	BOLZEN STIFT	080P
31		1342851C1		1	PLUG 10 mm TAPÓN	TAPPO BUJÃO	BOUCHON PLUG	STOPFEN PROP	050T
32		238-5140		1	O-RING 2-1/4 ID x 3/32 JUNTA HERMETICA	ANELLO TOROIDALE ANEL O	JOINT TORIQUE O-RING	O-RING O-RING	7176
		275217A2		1	KIT, SHIM Inc. 33 JUEGO DE CALCES	KIT SPESSORE JUEGO DE CALCES	JEU DE CALES PACKAGE, SHIMS	EINSTELLSCHEIBEN, SC KIT, AFSTANDSSTYKKE	P688
33		341208A1		2	SHIM 0,152 mm SUPLEMENTO	SPESSORE CALCO DE AFINACAO	CALE D'EPAISSEUR DIKTEPLAAT	EINSTELLSCHEIBCHEN MELLEMLÆG	7770
33		341207A1		2	SHIM 0,178 mm SUPLEMENTO	SPESSORE CALCO DE AFINACAO	CALE D'EPAISSEUR DIKTEPLAAT	EINSTELLSCHEIBCHEN MELLEMLÆG	7770
33		275215A1		2	SHIM 0,203 mm SUPLEMENTO	SPESSORE CALCO DE AFINACAO	CALE D'EPAISSEUR DIKTEPLAAT	EINSTELLSCHEIBCHEN MELLEMLÆG	7770
33		228300A1		2	SHIM 0,356 mm SUPLEMENTO	SPESSORE CALCO DE AFINACAO	CALE D'EPAISSEUR DIKTEPLAAT	EINSTELLSCHEIBCHEN MELLEMLÆG	7770
33		228303A1		2	SHIM 0,635 mm SUPLEMENTO	SPESSORE CALCO DE AFINACAO	CALE D'EPAISSEUR DIKTEPLAAT	EINSTELLSCHEIBCHEN MELLEMLÆG	7770
34		258469A1		1	PLATE, COVER PLAQUITA	PIASTRINA CHAPA PEQUENA	PLAQUETTE PLAAT, AFSCHERMING	ABDECKPLATTE PLADE	110P
35		339770A1		2	SCREW TORNILLO	VITE PARAFUSO	VIS SCHROEF	SCHRAUBE SKRUE	7450
40		302555A1		1	SHAFT, GEAR 30 T EJE DE PINIONS	ALBERO, INGRANAGGIO EIXO PINHAO	ARBRE DE PIGNONS SHAFT, GEAR	ZAHNRADWELLE GEARAKSEL	P722

TRANSMISSION DROP BOX
SCATOLA DI RINVIO DELLA TRASMISSIONE
BOÎTIER DE TRANSFERT DE LA TRANSMISSION
GETRIEBEGEHÄUSE

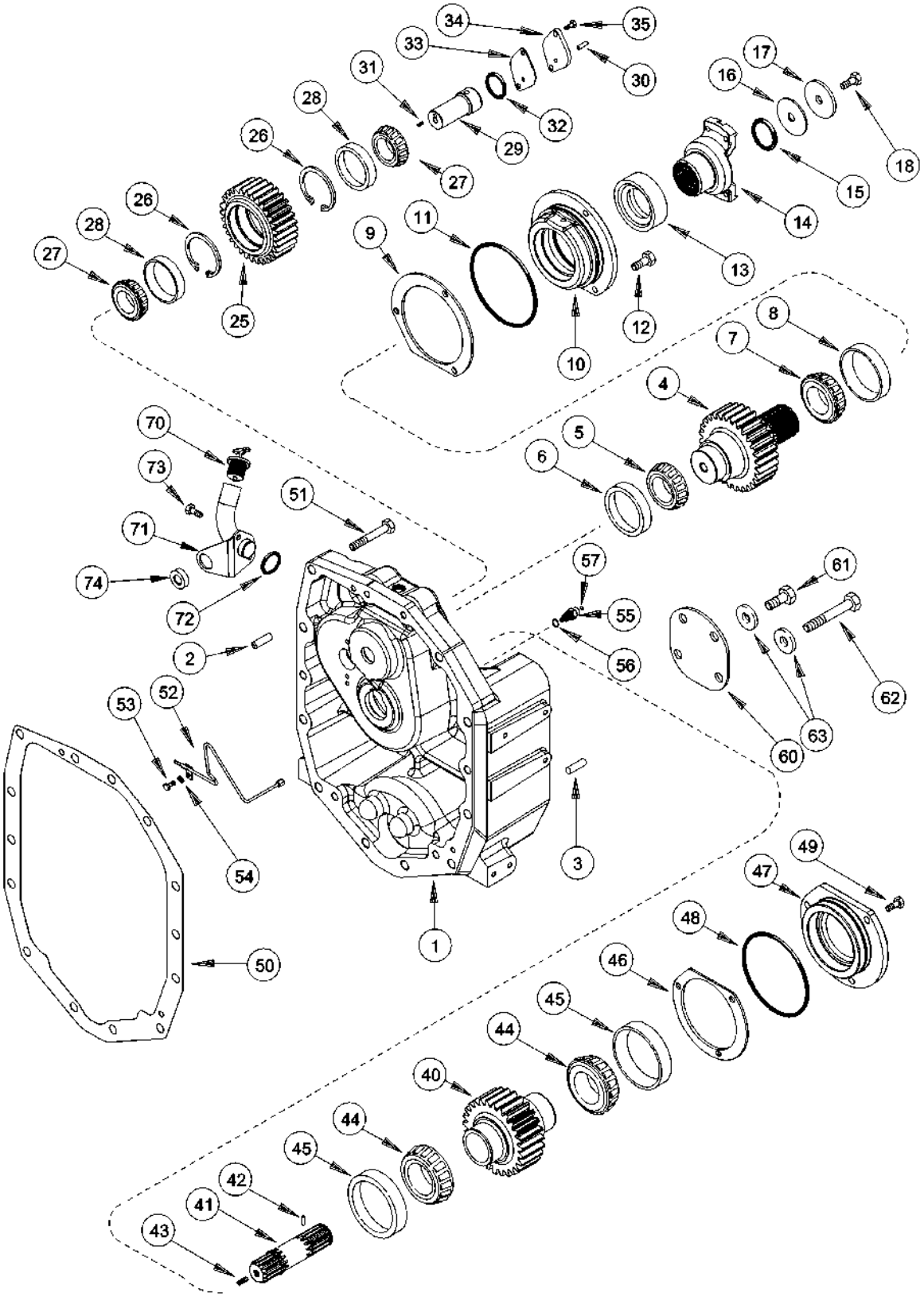

CAJA REDUCTORA DE LA TRANSMISIÓN
CAIXA DE QUEDA DA TRANSMISSÃO
HEFBAK TRANSMISSIE
KARDANFALDKASSE

R	N	P.N.	MOD	Q	Description Denominacion	Descrizione Denominação	Description Beschrijving	Bezeichnung Beskrivelse	L.C.
41	1	282726A1		1	SHAFT Inc. 42,43 EJE	ALBERO VEIO	ARBRE AS	WELLE AKSEL	7590
41	2	282724A1		1	SHAFT Inc. 42,43 EJE	ALBERO VEIO	ARBRE AS	WELLE AKSEL	7590
42		38-3605		1	PIN 3/32 x 5/16 PERNO	PERNO PERNO	AXE PEN	BOLZEN STIFT	080P
43		284151A1		1	SCREW M10 x 10 TORNILLO	VITE PARAFUSO	VIS SCHROEF	SCHRAUBE SKRUE	7450
44		105503H		2	BEARING, CONE CONO	CONO DEL CUSCINETTO CONE	CONE DE ROULEMENT KEGEL	KEGEL LEJEKONUS	P690
45		105496H		2	BEARING SET JUEGO DE CODINETES	CONFEZIONE, CUSCINE JOGO DE ROLAMENTOS	JEU DE ROULEMENTS BEARING SET	LAGERSATZ BEARING SET	P689
		275219A2		1	KIT, SHIM Inc. 46 JUEGO DE CALCES	KIT SPESSORE JUEGO DE CALCES	JEU DE CALES PACKAGE, SHIMS	EINSTELLSCHEIBEN, SC KIT, AFSTANDSSTYKKE	P688
46		341210A1		2	SHIM 0,152 mm SUPLEMENTO	SPESSORE CALCO DE AFINACAO	CALE D'EPAISSEUR DIKTEPLAAT	EINSTELLSCHEIBCHEN MELLEMLÆG	7770
46		341209A1		2	SHIM 0,178 mm SUPLEMENTO	SPESSORE CALCO DE AFINACAO	CALE D'EPAISSEUR DIKTEPLAAT	EINSTELLSCHEIBCHEN MELLEMLÆG	7770
46		275213A1		2	SHIM 0,203 mm SUPLEMENTO	SPESSORE CALCO DE AFINACAO	CALE D'EPAISSEUR DIKTEPLAAT	EINSTELLSCHEIBCHEN MELLEMLÆG	7770
46		228261A1		2	SHIM 0,356 mm SUPLEMENTO	SPESSORE CALCO DE AFINACAO	CALE D'EPAISSEUR DIKTEPLAAT	EINSTELLSCHEIBCHEN MELLEMLÆG	7770
46		228265A1		2	SHIM 0,635 mm SUPLEMENTO	SPESSORE CALCO DE AFINACAO	CALE D'EPAISSEUR DIKTEPLAAT	EINSTELLSCHEIBCHEN MELLEMLÆG	7770
47		226188A3		1	CAGE JAULA	GABBIA GAIOLA	CAGE CAGE	KÄFIG KUGLEHOLDER	1270
48		238-5157		1	O-RING 4-1/2 ID x 3/32 JUNTA HERMETICA	ANELLO TOROIDALE ANEL O	JOINT TORIQUE O-RING	O-RING O-RING	7176
49		339770A1		3	SCREW TORNILLO	VITE PARAFUSO	VIS SCHROEF	SCHRAUBE SKRUE	7450
50		230760A2		1	GASKET JUNTA HERMETICA	GUARNIZIONE JUNTA	JOINT DICHTINGSSTUK	DICHTUNG, FLACH PAKNING	123G
51		828-20110		2	SCREW M20 x 110; 10.9 TORNILLO	VITE PARAFUSO	VIS SCHROEF	SCHRAUBE SKRUE	7450
52		259979A2		1	TUBE TUBO	TUBETTO TUBO	TUBE BUISJE	ROHR RØR	9400
53		614-10020		1	SCREW M10 x 20 TORNILLO	VITE PARAFUSO	VIS SCHROEF	SCHRAUBE SKRUE	P136
54		892-11010		1	WASHER, LOCK M10 ARANDELA DE FRENO	ROSETTA DI SICUREZZA ANILHA DE FIXACAO	RONDELLE FREIN VEERRING	SPRENGRING LAASESKIVE	132R
55		93105C1		1	UNION CONEXION	RACCORDO A GOMITO UNIAO	UNION KOPPELING	VERBAND FORSKRUNING	9560
56		237-6008		1	O-RING 41/64 ID x 3/32 JUNTA HERMETICA	ANELLO TOROIDALE O-RING	JOINT THORIQUE O-RING	DICHTRING O-RING	055A
57		238-6014		1	O-RING 1/2 ID x 1/16 JUNTA HERMETICA	ANELLO TOROIDALE ANEL O	JOINT TORIQUE O-RING	O-RING O-RING	7176

(1) Without Creep Speed
(2) With Creep Speed

TRANSMISSION DROP BOX
SCATOLA DI RINVIO DELLA TRASMISSIONE
BOÎTIER DE TRANSFERT DE LA TRANSMISSION
GETRIEBEGEHÄUSE

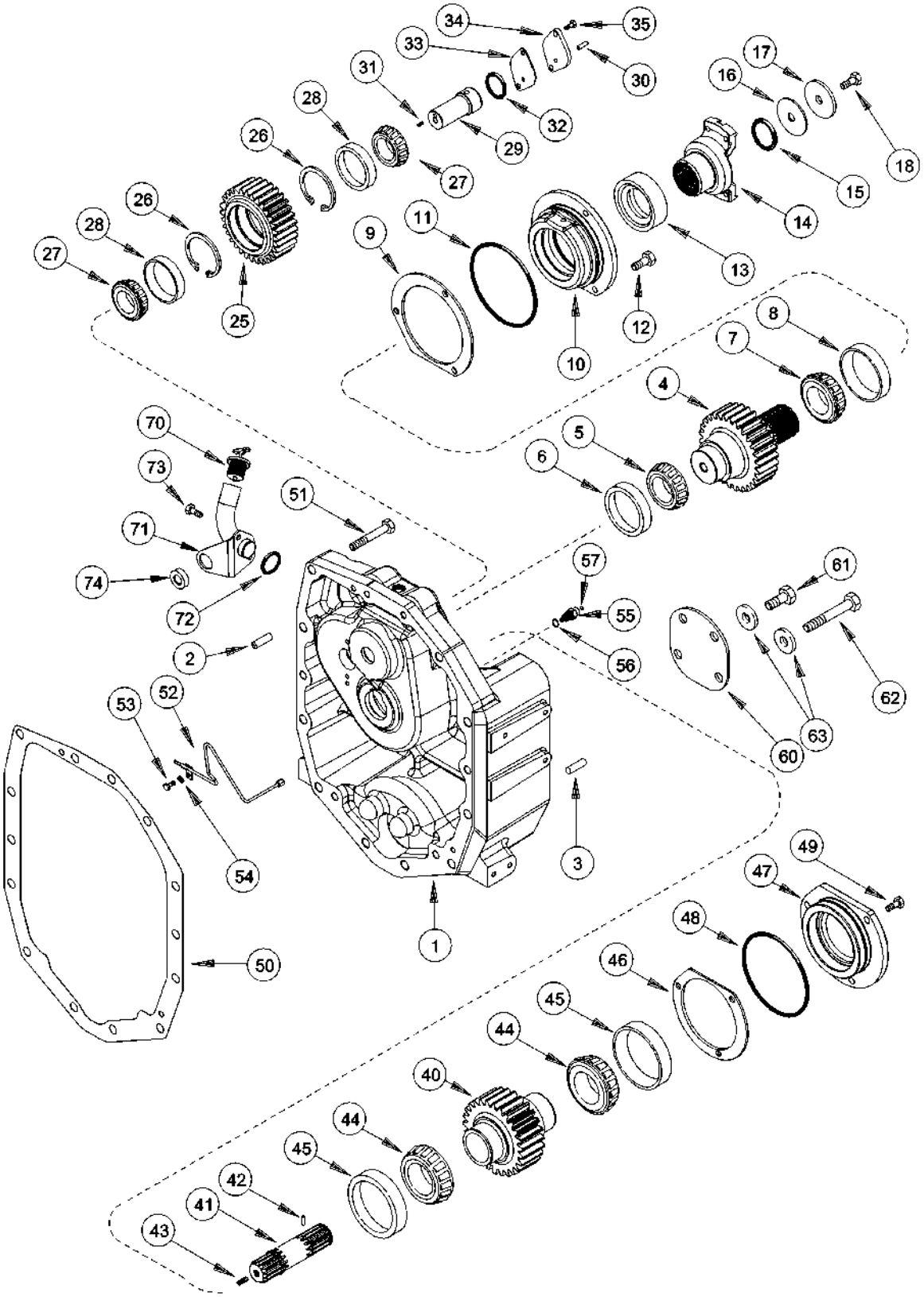

CAJA REDUCTORA DE LA TRANSMISIÓN
CAIXA DE QUEDA DA TRANSMISSÃO
HEFBAK TRANSMISSIE
KARDANFALDKASSE

R	N	P.N.	MOD	Q	Description Denominacion	Descrizione Denominação	Description Beschrijving	Bezeichnung Beskrivelse	L.C.
60	1	223420A1		1	COVER TAPADERA	COPERCHIO COBERTA	COUVERCLE DEKSEL	DECKEL DÆKSEL	265C
61		628-20060		2	SCREW M20 x 60; 10,9 TORNILLO	VITE PARAFUSO	VIS SCHROEF	SCHRAUBE SKRUE	7450
62		828-20150		2	SCREW M20 x 150; 10.9 TORNILLO	VITE PARAFUSO	VIS SCHROEF	SCHRAUBE SKRUE	7450
63		896-12020		4	WASHER 22 x 37 x 4 mm ARANDELA	ROSETTA PIANA ANILHA	RONDELLE SLUITRING	SCHEIBE FLADSKIVE	9720
70		279640A1		1	CAP TAPON DEL DEPOSITO	TAPPO SERBATOIO TAMPAO DE RESERVAT	CHAPEAU RESERVOIRDOP	KAPPE TANKDAEKSEL	052T
71		295087A1		1	TUBE TUBO	TUBETTO TUBO	TUBE BUISJE	SCHLAUCH RØR	195T
72		238-5222		1	O-RING 1-1/2 x 1/8 JUNTA HERMETICA	ANELLO TOROIDALE ANEL O	JOINT TORIQUE O-RING	O-RING O-RING	7176
73		614-10020		2	SCREW M10 x 20 TORNILLO	VITE PARAFUSO	VIS SCHROEF	SCHRAUBE SKRUE	P136
74		248-2181		1	GROMMET 1 ID PASACABLES	ANELLO PASSACAVO CASQUILHO ISOLADOR	PASSE-FIL KABELDOORGANG	TÜLLE RING	4020

(1) Without Mechanical Front Drive

06-03		p1	08/04

SPEED TRANSMISSION - HOUSING, BSN AJB0355338
CAMBIO VELOCITÀ - ALLOGGIAMENTO, BSN AJB0355338
CARTER DE LA BOÎTE DE VITESSES, BSN AJB0355338
WECHSELGETRIEBE-GEHÄUSE, BSN AJB0355338

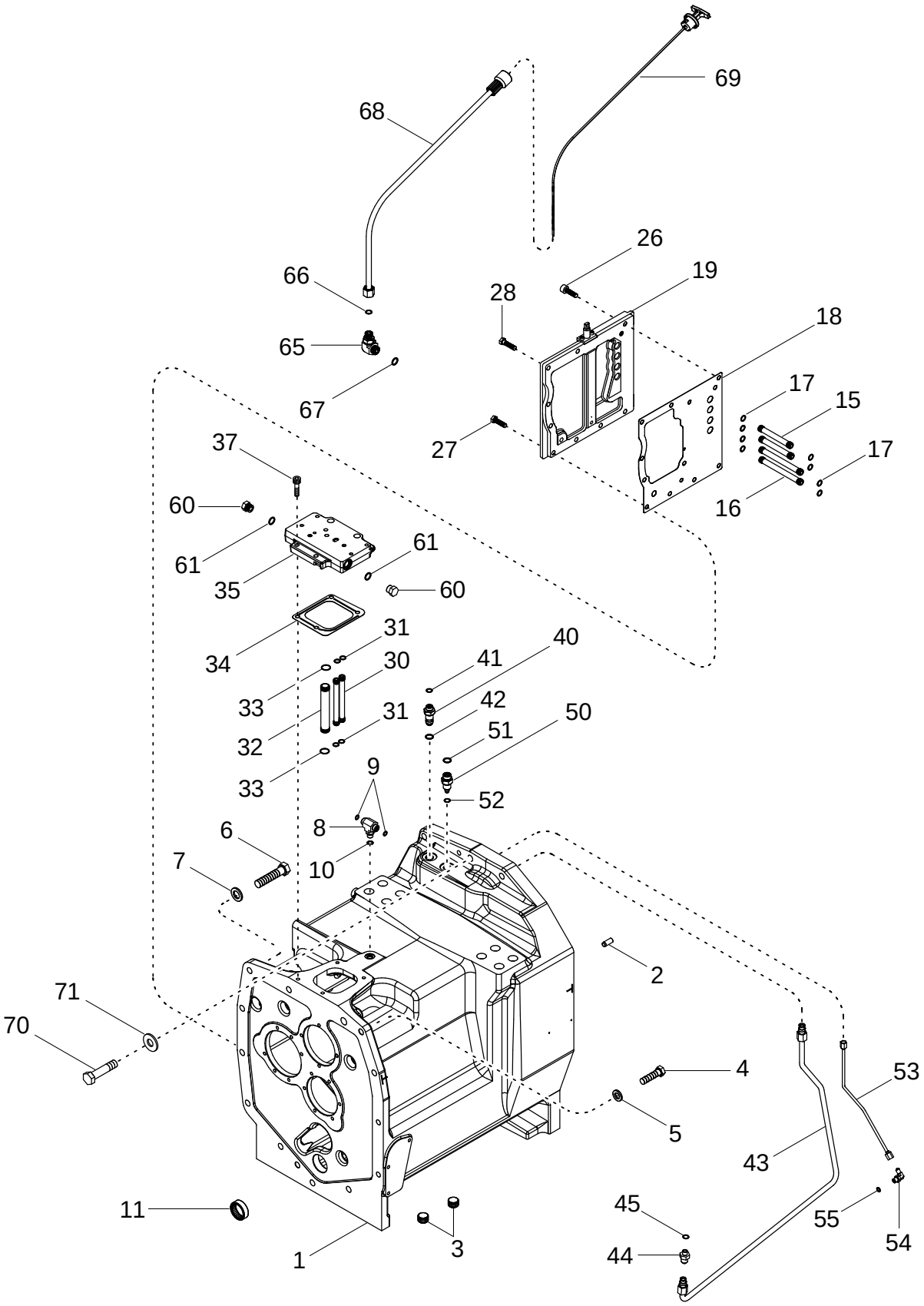

TRANSMISIÓN DE VELOCIDAD - ALOJAMIENTO, BSN AJB0355338
TRANSMISSÃO DA VELOCIDADE - ESTRUTURA, BSN AJB0355338
VERSNELLINGSTRANSMISSIE - BEHUIZING, BSN AJB0355338
HASTIGHEDSOVERFØRSEL - HUS, BSN AJB0355338

R	N	P.N.	MOD	Q	Description Denominacion	Descrizione Denominação	Description Beschrijving	Bezeichnung Beskrivelse	L.C.
1		307087A2	a	1	HOUSING Inc. 2, 3 CAVIDAD	ALLOGGIAMENTO ALOJAMENTO	CARTER HUIS	GEHÄUSE HUS	014V
1		307087A3	b	1	HOUSING Inc. 2, 3 CAVIDAD	ALLOGGIAMENTO ALOJAMENTO	CARTER HUIS	GEHÄUSE HUS	014V
1	1	87435948		1	HOUSING Inc. 2, 3 CAVIDAD	ALLOGGIAMENTO ALOJAMENTO	CARTER HUIS	GEHÄUSE HUS	014V
2		837-12030		2	DOWEL 12 x 30 mm PITON	GRANO GUIA	PION STEL PEN	PAßTIFT DYVEL	P176
3		192792A1		2	PLUG 3/4 in TAPÓN	TAPPO BUJÃO	BOUCHON PLUG	STOPFEN PROP	050T
4		813-16060		8	SCREW M16 x 60 TORNILLO	VITE PARAFUSO	VIS SCHROEF	SCHRAUBE SKRUE	040V
4		828-16080		1	SCREW M16 x 80; 10.9 TORNILLO	VITE PARAFUSO	VIS SCHROEF	SCHRAUBE SKRUE	7450
4		828-16090		2	SCREW M16 x 90; 10.9, Used with 87435948 Housing TORNILLO	VITE PARAFUSO	VIS SCHROEF	SCHRAUBE SKRUE	7450
5		896-11016		9	WASHER 17,5 x 30 x 4 mm ARANDELA	ROSETTA PIANA ANILHA	RONDELLE SLUITRING	SCHEIBE FLADSKIVE	9720
6		828-20090		1	SCREW M20 x 90; 10.9 TORNILLO	VITE PARAFUSO	VIS SCHROEF	SCHRAUBE SKRUE	7450
7		896-12020		1	WASHER 22 x 37 x 4 mm ARANDELA	ROSETTA PIANA ANILHA	RONDELLE SLUITRING	SCHEIBE FLADSKIVE	9720
8		201-401		1	TEE 11/16 fc sl x 9/16 Or, Inc. 9, 10 RACOR-T	PEZZO A T TE	TE TEE	T-STÜCK T-STYKKE	9020
9		238-6012		2	O-RING 3/8 ID x 1/16 JUNTA HERMETICA	ANELLO TOROIDALE ANEL O	JOINT TORIQUE O-RING	O-RING O-RING	7176
10		237-6006		1	O-RING 15/32 ID x 5/64 JUNTA HERMETICA	ANELLO TOROIDALE O-RING	JOINT THORIQUE O-RING	DICHTRING O-RING	055A
11		205369R91		1	BEARING, NEEDLE RODAMIENTO DE RPDIL	CUSCINETTO A RULLINI ROLAMENTO	ROULEMENT A AIGUILLE LAGER, NAALD	NADELLAGER NAALELEJE	344C
15		235976A2		2	TUBE TUBO	TUBETTO TUBO	TUBE BUISJE	SCHLAUCH RØR	195T
16		235977A2		2	TUBE TUBO	TUBETTO TUBO	TUBE BUISJE	SCHLAUCH RØR	195T
17		238-5014		8	O-RING 1/2 ID x 1/16 JUNTA HERMETICA	ANELLO TOROIDALE ANEL O	JOINT TORIQUE O-RING	O-RING O-RING	7176
18		234157A5	a	1	GASKET JUNTA HERMETICA	GUARNIZIONE JUNTA	JOINT DICHTINGSSTUK	DICHTUNG, FLACH PAKNING	123G
18		87433655	b	1	GASKET JUNTA HERMETICA	GUARNIZIONE JUNTA	JOINT DICHTINGSSTUK	DICHTUNG, FLACH PAKNING	123G
19	2	445535A2	a	1	PLATE ASSY. PLACA (CONJUNTO)	PIASTRA, COMPLESSIVO PLACA CONJUNTO	PLAQUE (ASSEMBLEE) PLATE ASSY.	PLATTE (KPLT.) PLATE ASSY.	P433

(1) Replaces 307087A3. Also Order 2 of 828-16090
(2) See Figure 06-06
(a) BSN AJB0304805
(b) ASN AJB0304805

SPEED TRANSMISSION - HOUSING, BSN AJB0355338
CAMBIO VELOCITÀ - ALLOGGIAMENTO, BSN AJB0355338
CARTER DE LA BOÎTE DE VITESSES, BSN AJB0355338
WECHSELGETRIEBE-GEHÄUSE, BSN AJB0355338

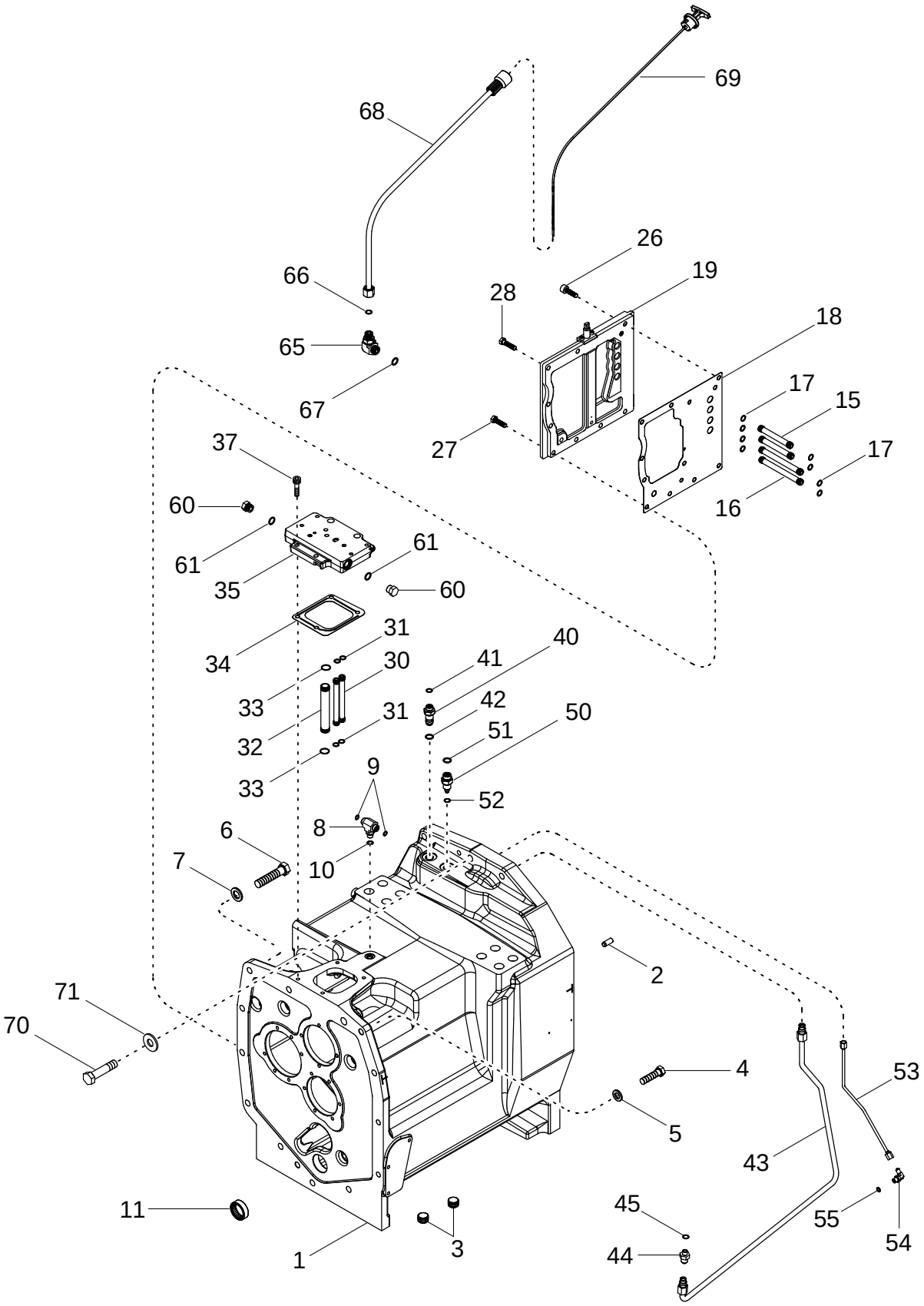

TRANSMISIÓN DE VELOCIDAD - ALOJAMIENTO, BSN AJB0355338
TRANSMISSÃO DA VELOCIDADE - ESTRUTURA, BSN AJB0355338
VERSNELLINGSTRANSMISSIE - BEHUIZING, BSN AJB0355338
HASTIGHEDSOVERFØRSEL - HUS, BSN AJB0355338

R	N	P.N.	MOD	Q	Description Denominacion	Descrizione Denominação	Description Beschrijving	Bezeichnung Beskrivelse	L.C.
19	1	87433653	a	1	PLATE ASSY. PLACA (CONJUNTO)	PIASTRA, COMPLESSIVO PLACA CONJUNTO	PLAQUE (ASSEMBLEE) PLATE ASSY.	PLATTE (KPLT.) PLATE ASSY.	P433
26		861-10030	b	1	SCREW M10 x 30; 12.9 TORNILLO	VITE PARAFUSO	VIS SCHROEF	SCHRAUBE SKRUE	7450
26		861-10030	a	2	SCREW M10 x 30; 12.9 TORNILLO	VITE PARAFUSO	VIS SCHROEF	SCHRAUBE SKRUE	7450
27		628-10035		6	SCREW M10 x 35; 10.9 TORNILLO	VITE PARAFUSO	VIS SCHROEF	SCHRAUBE SKRUE	7450
28		614-10040		2	SCREW M10 x 40; 8.8 TORNILLO	VITE PARAFUSO	VIS SCHROEF	SCHRAUBE SKRUE	P136
30		235977A2		2	TUBE TUBO	TUBETTO TUBO	TUBE BUISJE	SCHLAUCH RØR	195T
31		238-5014		4	O-RING 1/2 ID x 1/16 JUNTA HERMETICA	ANELLO TOROIDALE ANEL O	JOINT TORIQUE O-RING	O-RING O-RING	7176
32		300827A1		1	TUBE TUBO	TUBETTO TUBO	TUBE BUISJE	SCHLAUCH RØR	195T
33		238-5019		2	O-RING 13/16 ID x 1/16 JUNTA HERMETICA	ANELLO TOROIDALE ANEL O	JOINT TORIQUE O-RING	O-RING O-RING	7176
34		253805A1		1	GASKET JUNTA HERMETICA	GUARNIZIONE JUNTA	JOINT DICHTINGSSTUK	DICHTUNG, FLACH PAKNING	123G
35	2	445533A2		1	PLATE ASSY. PLACA (CONJUNTO)	PIASTRA, COMPLESSIVO PLACA CONJUNTO	PLAQUE (ASSEMBLEE) PLATE ASSY.	PLATTE (KPLT.) PLATE ASSY.	P433
37		861-10035		4	SCREW M10 x 35; 12.9 TORNILLO	VITE PARAFUSO	VIS SCHROEF	SCHRAUBE SKRUE	7450
40	3	93103C1		1	UNION CONEXION	RACCORDO A GOMITO UNIAO	UNION KOPPELING	VERBAND FORSKRUNING	9560
41		238-6012		1	O-RING 3/8 ID x 1/16 JUNTA HERMETICA	ANELLO TOROIDALE ANEL O	JOINT TORIQUE O-RING	O-RING O-RING	7176
42		237-6008		1	O-RING 41/64 ID x 3/32 JUNTA HERMETICA	ANELLO TOROIDALE O-RING	JOINT THORIQUE O-RING	DICHTRING O-RING	055A
43	3	256955A2		1	TUBE TUBO	TUBETTO TUBO	TUBE BUISJE	SCHLAUCH RØR	195T
44	3	218-5351		1	CONNECTOR, HYD. 3/4 fl x 9/16 Or, Inc. 45 RACOR	RACCORDO IDRAULICO CONECTOR	RACCORD VERBINDING	STUTZEN FORSKRUNING	020R
45		237-6006		1	O-RING 15/32 ID x 5/64 JUNTA HERMETICA	ANELLO TOROIDALE O-RING	JOINT THORIQUE O-RING	DICHTRING O-RING	055A
50	3	93105C1		1	UNION CONEXION	RACCORDO A GOMITO UNIAO	UNION KOPPELING	VERBAND FORSKRUNING	9560
51		238-6014		1	O-RING 1/2 ID x 1/16 JUNTA HERMETICA	ANELLO TOROIDALE ANEL O	JOINT TORIQUE O-RING	O-RING O-RING	7176
52		237-6008		1	O-RING 41/64 ID x 3/32 JUNTA HERMETICA	ANELLO TOROIDALE O-RING	JOINT THORIQUE O-RING	DICHTRING O-RING	055A

(1) See Figure 06-06
(2) See Figure 06-07
(3) With Creep Speed
(a) ASN AJB0304805
(b) BSN AJB0304805

SPEED TRANSMISSION - HOUSING, BSN AJB0355338
CAMBIO VELOCITÀ - ALLOGGIAMENTO, BSN AJB0355338
CARTER DE LA BOÎTE DE VITESSES, BSN AJB0355338
WECHSELGETRIEBE-GEHÄUSE, BSN AJB0355338

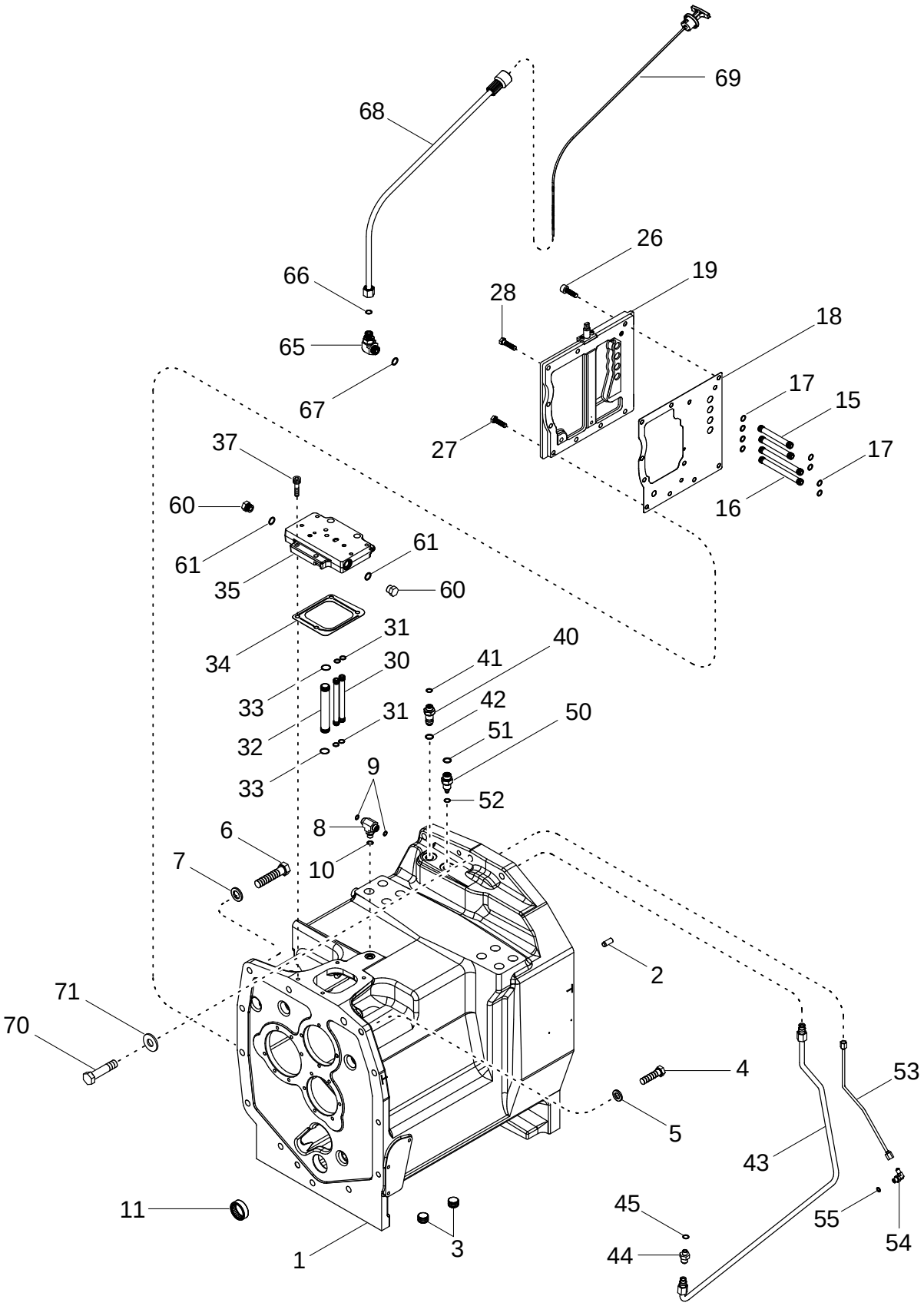

TRANSMISIÓN DE VELOCIDAD - ALOJAMIENTO, BSN AJB0355338
TRANSMISSÃO DA VELOCIDADE - ESTRUTURA, BSN AJB0355338
VERSNELLINGSTRANSMISSIE - BEHUIZING, BSN AJB0355338
HASTIGHEDSOVERFØRSEL - HUS, BSN AJB0355338

R	N	P.N.	MOD	Q	Description Denominacion	Descrizione Denominação	Description Beschrijving	Bezeichnung Beskrivelse	L.C.
53	1	311670A1		1	TUBE TUBO	TUBETTO TUBO	TUBE BUISJE	SCHLAUCH RØR	195T
54	1	218-5103		1	ELBOW 7/16 fl x adj Or, Inc. 55 CODO	GOMITO JOELHO	COUDE ELLEBOOG	KNIESTÜCK VINKELRØR	2940
55		237-6004		1	O-RING 23/64 ID x 5/64 JUNTA HERMETICA	ANELLO TOROIDALE ANEL O	JOINT TORIQUE O-RING	O-RING O-RING	7176
60	2	218-5156		2	PLUG 3/4 Or, Inc. 61 TAPÓN	TAPPO BUJÃO	BOUCHON PLUG	STOPFEN PROP	050T
61		237-6008		2	O-RING 41/64 ID x 3/32 JUNTA HERMETICA	ANELLO TOROIDALE O-RING	JOINT THORIQUE O-RING	DICHTRING O-RING	055A
65		700-305		1	ELBOW 13/16 fc sl x 18 Or, Inc. 66, 67 CODO	GOMITO JOELHO	COUDE ELLEBOOG	KNIESTÜCK VINKELRØR	2940
66		238-6014		1	O-RING 1/2 ID x 1/16 JUNTA HERMETICA	ANELLO TOROIDALE ANEL O	JOINT TORIQUE O-RING	O-RING O-RING	7176
67		637-63153		1	O-RING 15,3 ID x 2,2 JUNTA HERMETICA	ANELLO TOROIDALE O-RING	JOINT THORIQUE O-RING	DICHTRING O-RING	055A
68		295149A1		1	TUBE TUBO	TUBETTO TUBO	TUBE BUISJE	SCHLAUCH RØR	195T
69		295316A1		1	DIPSTICK VARILLA DE NIVEL	ASTA DI LIVELLO VARETA DE NIVEL	JAUGE DE NIVEAU PEILSTANG	MESSTAB MAALEPIND	P763
70		814-16080		2	SCREW M16 x 80 TORNILLO	VITE PARAFUSO	VIS SCHROEF	SCHRAUBE SKRUE	P136
71		896-12016		2	WASHER 17,5 x 30 x 4 mm ARANDELA	ROSETTA PIANA ANILHA	RONDELLE SLUITRING	SCHEIBE FLADSKIVE	9720

(1) With Creep Speed
(2) Without Creep Speed

SPEED TRANSMISSION - HOUSING, BTW AJB0355338 & AJB0355923
CAMBIO VELOCITÀ - ALLOGGIAMENTO, BTW AJB0355338 & AJB0355923
CARTER DE LA BOÎTE DE VITESSES, BTW AJB0355338 & AJB0355923
WECHSELGETRIEBE-GEHÄUSE, BTW AJB0355338 & AJB0355923

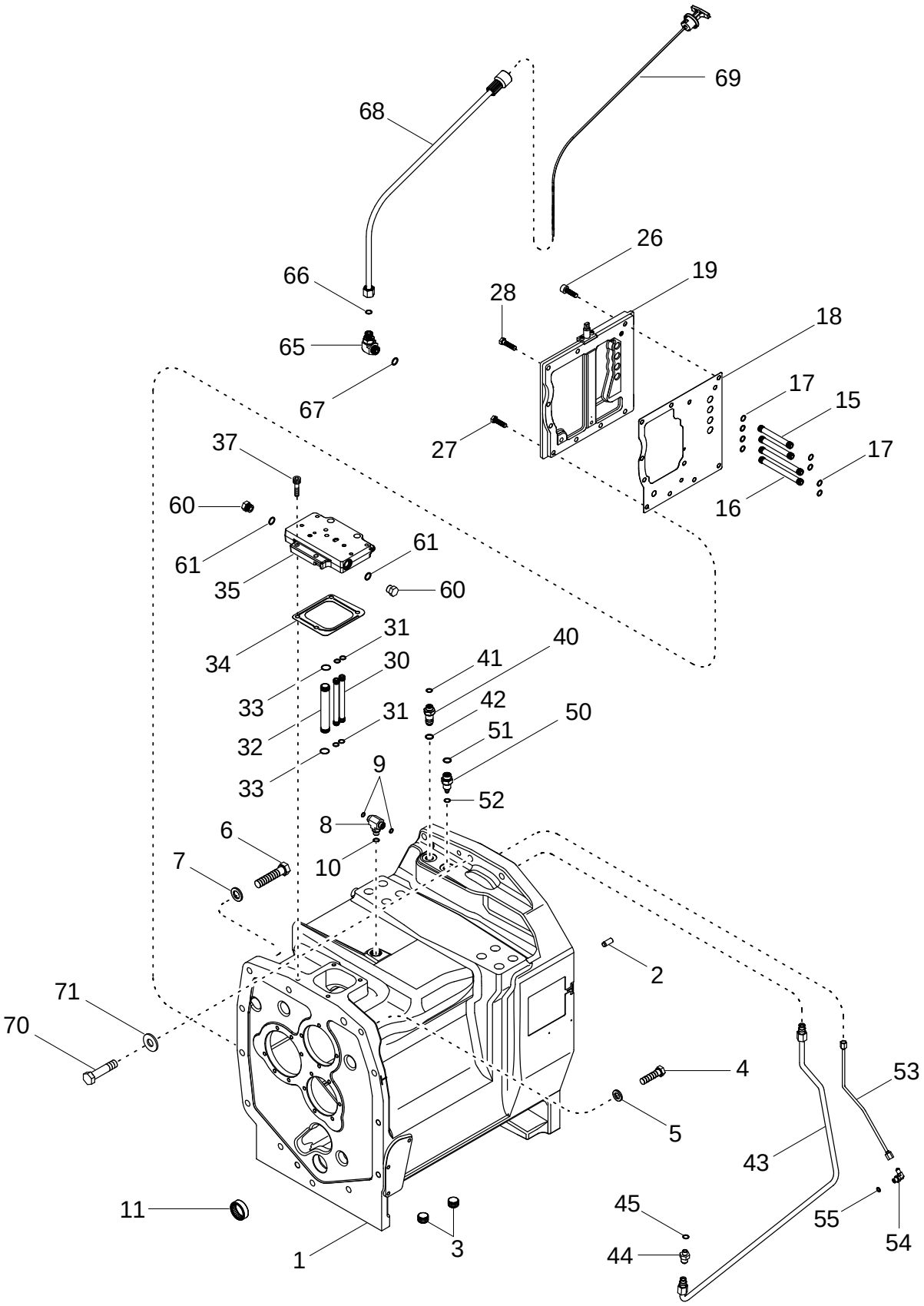

TRANSMISIÓN DE VELOCIDAD - ALOJAMIENTO, BTW AJB0355338 & AJB0355923
TRANSMISSÃO DA VELOCIDADE - ESTRUTURA, BTW AJB0355338 & AJB0355923
VERSNELLINGSTRANSMISSIE - BEHUIZING, BTW AJB0355338 & AJB0355923
HASTIGHEDSOVERFØRSEL - HUS, BTW AJB0355338 & AJB0355923

R	N	P.N.	MOD	Q	Description Denominacion	Descrizione Denominação	Description Beschrijving	Bezeichnung Beskrivelse	L.C.
1		87435948		1	HOUSING Inc. 2, 3 CAVIDAD	ALLOGGIAMENTO ALOJAMENTO	CARTER HUIS	GEHÄUSE HUS	014V
2		837-12030		2	DOWEL 12 x 30 mm PITON	GRANO GUIA	PION STEL PEN	PAßTIFT DYVEL	P176
3		192792A1		2	PLUG 3/4 in TAPÓN	TAPPO BUJÃO	BOUCHON PLUG	STOPFEN PROP	050T
4		828-16060		7	SCREW M16 x 60 TORNILLO	VITE PARAFUSO	VIS SCHROEF	SCHRAUBE SKRUE	7450
4		828-16090		2	SCREW M16 x 90; 10.9 TORNILLO	VITE PARAFUSO	VIS SCHROEF	SCHRAUBE SKRUE	7450
5		896-11016		9	WASHER 17,5 x 30 x 4 mm ARANDELA	ROSETTA PIANA ANILHA	RONDELLE SLUITRING	SCHEIBE FLADSKIVE	9720
6		828-20090		1	SCREW M20 x 90; 10.9 TORNILLO	VITE PARAFUSO	VIS SCHROEF	SCHRAUBE SKRUE	7450
7		896-12020		1	WASHER 22 x 37 x 4 mm ARANDELA	ROSETTA PIANA ANILHA	RONDELLE SLUITRING	SCHEIBE FLADSKIVE	9720
8		201-401		1	TEE 11/16 fc sl x 9/16 Or, Inc. 9, 10 RACOR-T	PEZZO A T TE	TE TEE	T-STÜCK T-STYKKE	9020
9		238-6012		2	O-RING 3/8 ID x 1/16 JUNTA HERMETICA	ANELLO TOROIDALE ANEL O	JOINT TORIQUE O-RING	O-RING O-RING	7176
10		237-6006		1	O-RING 15/32 ID x 5/64 JUNTA HERMETICA	ANELLO TOROIDALE O-RING	JOINT THORIQUE O-RING	DICHTRING O-RING	055A
11		205369R91		1	BEARING, NEEDLE RODAMIENTO DE RPDIL	CUSCINETTO A RULLINI ROLAMENTO	ROULEMENT A AIGUILLE LAGER, NAALD	NADELLAGER NAALELEJE	344C
15		235976A2		2	TUBE TUBO	TUBETTO TUBO	TUBE BUISJE	SCHLAUCH RØR	195T
16		235977A2		2	TUBE TUBO	TUBETTO TUBO	TUBE BUISJE	SCHLAUCH RØR	195T
17		238-5014		8	O-RING 1/2 ID x 1/16 JUNTA HERMETICA	ANELLO TOROIDALE ANEL O	JOINT TORIQUE O-RING	O-RING O-RING	7176
18		87433655		1	GASKET JUNTA HERMETICA	GUARNIZIONE JUNTA	JOINT DICHTINGSSTUK	DICHTUNG, FLACH PAKNING	123G
19	1	87433653		1	PLATE ASSY. PLACA (CONJUNTO)	PIASTRA, COMPLESSIVO PLACA CONJUNTO	PLAQUE (ASSEMBLEE) PLATE ASSY.	PLATTE (KPLT.) PLATE ASSY.	P433
26		861-10030		2	SCREW M10 x 30; 12.9 TORNILLO	VITE PARAFUSO	VIS SCHROEF	SCHRAUBE SKRUE	7450
27		628-10035		6	SCREW M10 x 35; 10.9 TORNILLO	VITE PARAFUSO	VIS SCHROEF	SCHRAUBE SKRUE	7450
28		614-10040		2	SCREW M10 x 40; 8.8 TORNILLO	VITE PARAFUSO	VIS SCHROEF	SCHRAUBE SKRUE	P136
30		235977A2		2	TUBE TUBO	TUBETTO TUBO	TUBE BUISJE	SCHLAUCH RØR	195T
31		238-5014		4	O-RING 1/2 ID x 1/16 JUNTA HERMETICA	ANELLO TOROIDALE ANEL O	JOINT TORIQUE O-RING	O-RING O-RING	7176
32		300827A1		1	TUBE TUBO	TUBETTO TUBO	TUBE BUISJE	SCHLAUCH RØR	195T

(1) See Figure 06-06

SPEED TRANSMISSION - HOUSING, BTW AJB0355338 & AJB0355923
CAMBIO VELOCITÀ - ALLOGGIAMENTO, BTW AJB0355338 & AJB0355923
CARTER DE LA BOÎTE DE VITESSES, BTW AJB0355338 & AJB0355923
WECHSELGETRIEBE-GEHÄUSE, BTW AJB0355338 & AJB0355923

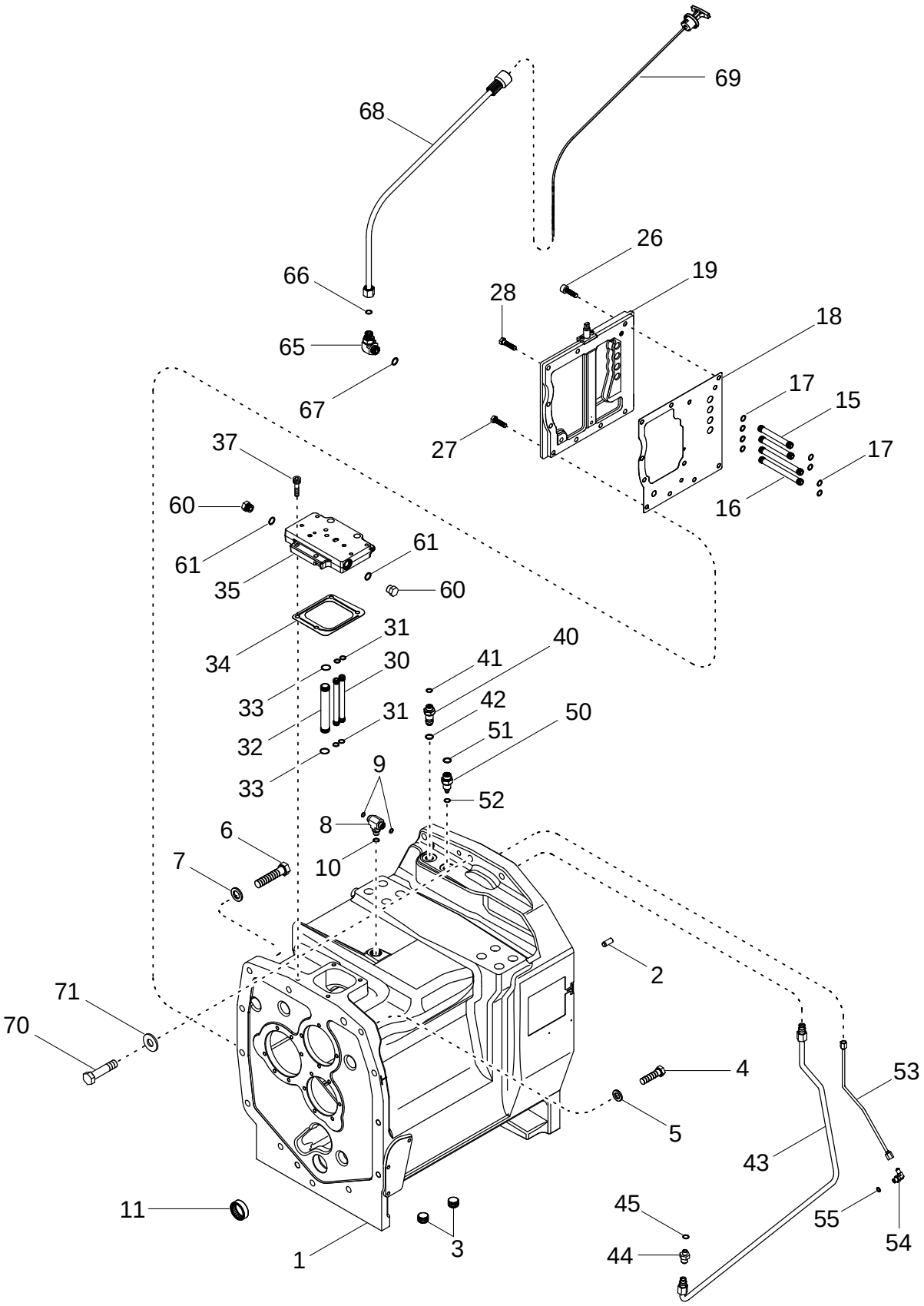

TRANSMISIÓN DE VELOCIDAD - ALOJAMIENTO, BTW AJB0355338 & AJB0355923
TRANSMISSÃO DA VELOCIDADE - ESTRUTURA, BTW AJB0355338 & AJB0355923
VERSNELLINGSTRANSMISSIE - BEHUIZING, BTW AJB0355338 & AJB0355923
HASTIGHEDSOVERFØRSEL - HUS, BTW AJB0355338 & AJB0355923

R	N	P.N.	MOD	Q	Description Denominacion	Descrizione Denominação	Description Beschrijving	Bezeichnung Beskrivelse	L.C.
33		238-5019		2	O-RING 13/16 ID x 1/16 JUNTA HERMETICA	ANELLO TOROIDALE ANEL O	JOINT TORIQUE O-RING	O-RING O-RING	7176
34		87424932		1	GASKET JUNTA HERMETICA	GUARNIZIONE JUNTA	JOINT DICHTINGSSTUK	DICHTUNG, FLACH PAKNING	123G
35	1	87444975		1	PLATE ASSY. PLACA (CONJUNTO)	PIASTRA, COMPLESSIVO PLACA CONJUNTO	PLAQUE (ASSEMBLEE) PLATE ASSY.	PLATTE (KPLT.) PLATE ASSY.	P433
37		861-10035		4	SCREW M10 x 35; 12.9 TORNILLO	VITE PARAFUSO	VIS SCHROEF	SCHRAUBE SKRUE	7450
40	2	93103C1		1	UNION CONEXION	RACCORDO A GOMITO UNIAO	UNION KOPPELING	VERBAND FORSKRUNING	9560
41		238-6012		1	O-RING 3/8 ID x 1/16 JUNTA HERMETICA	ANELLO TOROIDALE ANEL O	JOINT TORIQUE O-RING	O-RING O-RING	7176
42		237-6008		1	O-RING 41/64 ID x 3/32 JUNTA HERMETICA	ANELLO TOROIDALE O-RING	JOINT THORIQUE O-RING	DICHTRING O-RING	055A
43	2	256955A2		1	TUBE TUBO	TUBETTO TUBO	TUBE BUISJE	SCHLAUCH RØR	195T
44	2	218-5351		1	CONNECTOR, HYD. 3/4 fl x 9/16 Or, Inc. 45 RACOR	RACCORDO IDRAULICO CONECTOR	RACCORD VERBINDING	STUTZEN FORSKRUNING	020R
45		237-6006		1	O-RING 15/32 ID x 5/64 JUNTA HERMETICA	ANELLO TOROIDALE O-RING	JOINT THORIQUE O-RING	DICHTRING O-RING	055A
50	2	93105C1		1	UNION CONEXION	RACCORDO A GOMITO UNIAO	UNION KOPPELING	VERBAND FORSKRUNING	9560
51		238-6014		1	O-RING 1/2 ID x 1/16 JUNTA HERMETICA	ANELLO TOROIDALE ANEL O	JOINT TORIQUE O-RING	O-RING O-RING	7176
52		237-6008		1	O-RING 41/64 ID x 3/32 JUNTA HERMETICA	ANELLO TOROIDALE O-RING	JOINT THORIQUE O-RING	DICHTRING O-RING	055A
53	2	311670A1		1	TUBE TUBO	TUBETTO TUBO	TUBE BUISJE	SCHLAUCH RØR	195T
54	2	218-5103		1	ELBOW 7/16 fl x adj Or, Inc. 55 CODO	GOMITO JOELHO	COUDE ELLEBOOG	KNIESTÜCK VINKELRØR	2940
55		237-6004		1	O-RING 23/64 ID x 5/64 JUNTA HERMETICA	ANELLO TOROIDALE ANEL O	JOINT TORIQUE O-RING	O-RING O-RING	7176
60	3	218-5156		2	PLUG 3/4 Or, Inc. 61 TAPÓN	TAPPO BUJÃO	BOUCHON PLUG	STOPFEN PROP	050T
61		237-6008		2	O-RING 41/64 ID x 3/32 JUNTA HERMETICA	ANELLO TOROIDALE O-RING	JOINT THORIQUE O-RING	DICHTRING O-RING	055A
65		700-305		1	ELBOW 13/16 fc sl x 18 Or, Inc. 66, 67 CODO	GOMITO JOELHO	COUDE ELLEBOOG	KNIESTÜCK VINKELRØR	2940
66		238-6014		1	O-RING 1/2 ID x 1/16 JUNTA HERMETICA	ANELLO TOROIDALE ANEL O	JOINT TORIQUE O-RING	O-RING O-RING	7176
67		637-63153		1	O-RING 15,3 ID x 2,2 JUNTA HERMETICA	ANELLO TOROIDALE O-RING	JOINT THORIQUE O-RING	DICHTRING O-RING	055A

(1) See Figure 06-07
(2) With Creep Speed
(3) Without Creep Speed

SPEED TRANSMISSION - HOUSING, BTW AJB0355338 & AJB0355923
CAMBIO VELOCITÀ - ALLOGGIAMENTO, BTW AJB0355338 & AJB0355923
CARTER DE LA BOÎTE DE VITESSES, BTW AJB0355338 & AJB0355923
WECHSELGETRIEBE-GEHÄUSE, BTW AJB0355338 & AJB0355923

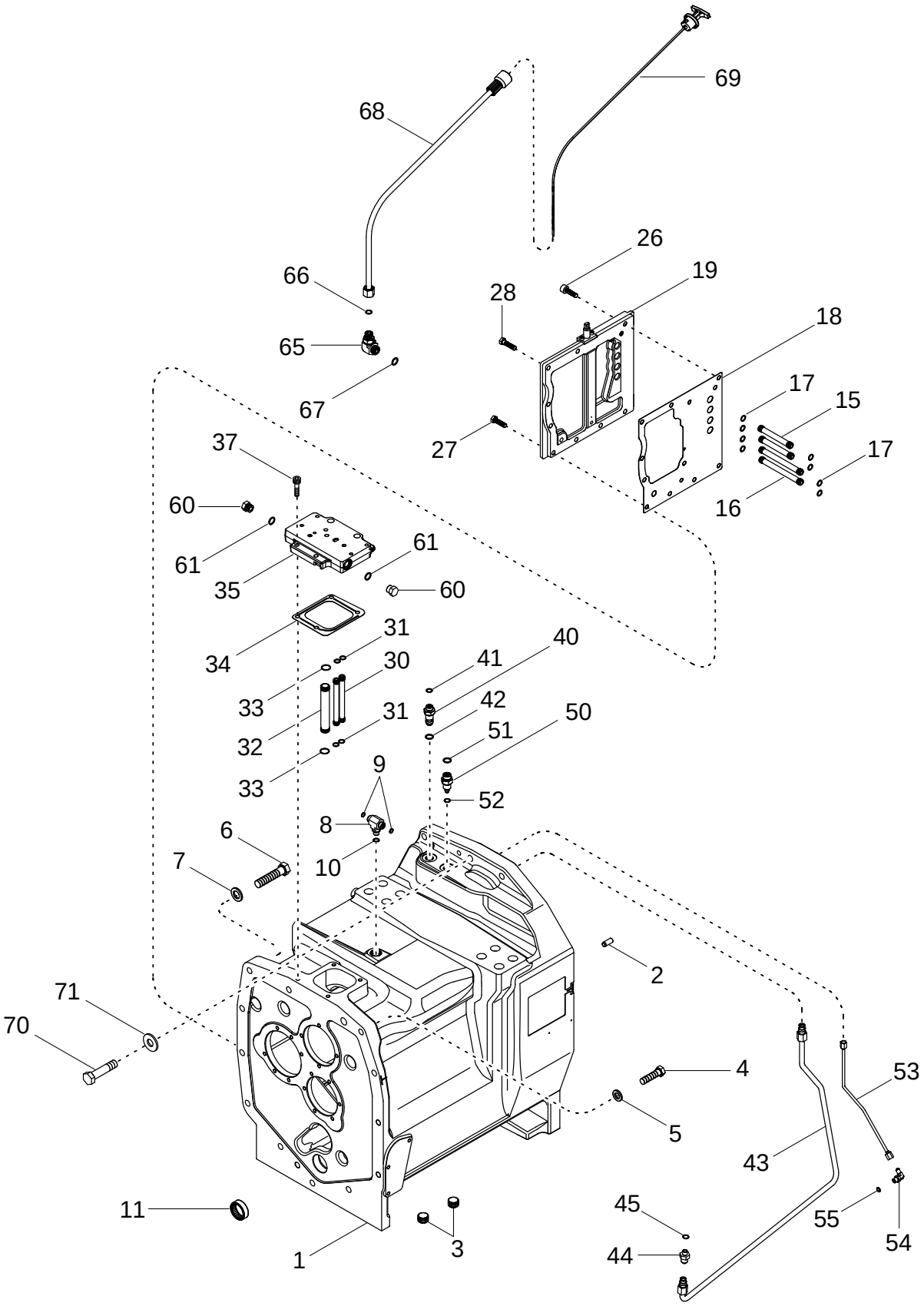

TRANSMISIÓN DE VELOCIDAD - ALOJAMIENTO, BTW AJB0355338 & AJB0355923
TRANSMISSÃO DA VELOCIDADE - ESTRUTURA, BTW AJB0355338 & AJB0355923
VERSNELLINGSTRANSMISSIE - BEHUIZING, BTW AJB0355338 & AJB0355923
HASTIGHEDSOVERFØRSEL - HUS, BTW AJB0355338 & AJB0355923

R	N	P.N.	MOD	Q	Description Denominacion	Descrizione Denominação	Description Beschrijving	Bezeichnung Beskrivelse	L.C.
68		295149A1		1	TUBE TUBO	TUBETTO TUBO	TUBE BUISJE	SCHLAUCH RØR	195T
69		295316A1		1	DIPSTICK VARILLA DE NIVEL	ASTA DI LIVELLO VARETA DE NIVEL	JAUGE DE NIVEAU PEILSTANG	MESSTAB MAALEPIND	P763
70		814-16080		2	SCREW M16 x 80 TORNILLO	VITE PARAFUSO	VIS SCHROEF	SCHRAUBE SKRUE	P136
71		896-12016		2	WASHER 17,5 x 30 x 4 mm ARANDELA	ROSETTA PIANA ANILHA	RONDELLE SLUITRING	SCHEIBE FLADSKIVE	9720

06-05		p1	11/04

SPEED TRANSMISSION - HOUSING, ASN AJB0355923
CAMBIO VELOCITÀ - ALLOGGIAMENTO, ASN AJB0355923
CARTER DE LA BOÎTE DE VITESSES, ASN AJB0355923
WECHSELGETRIEBE-GEHÄUSE, ASN AJB0355923

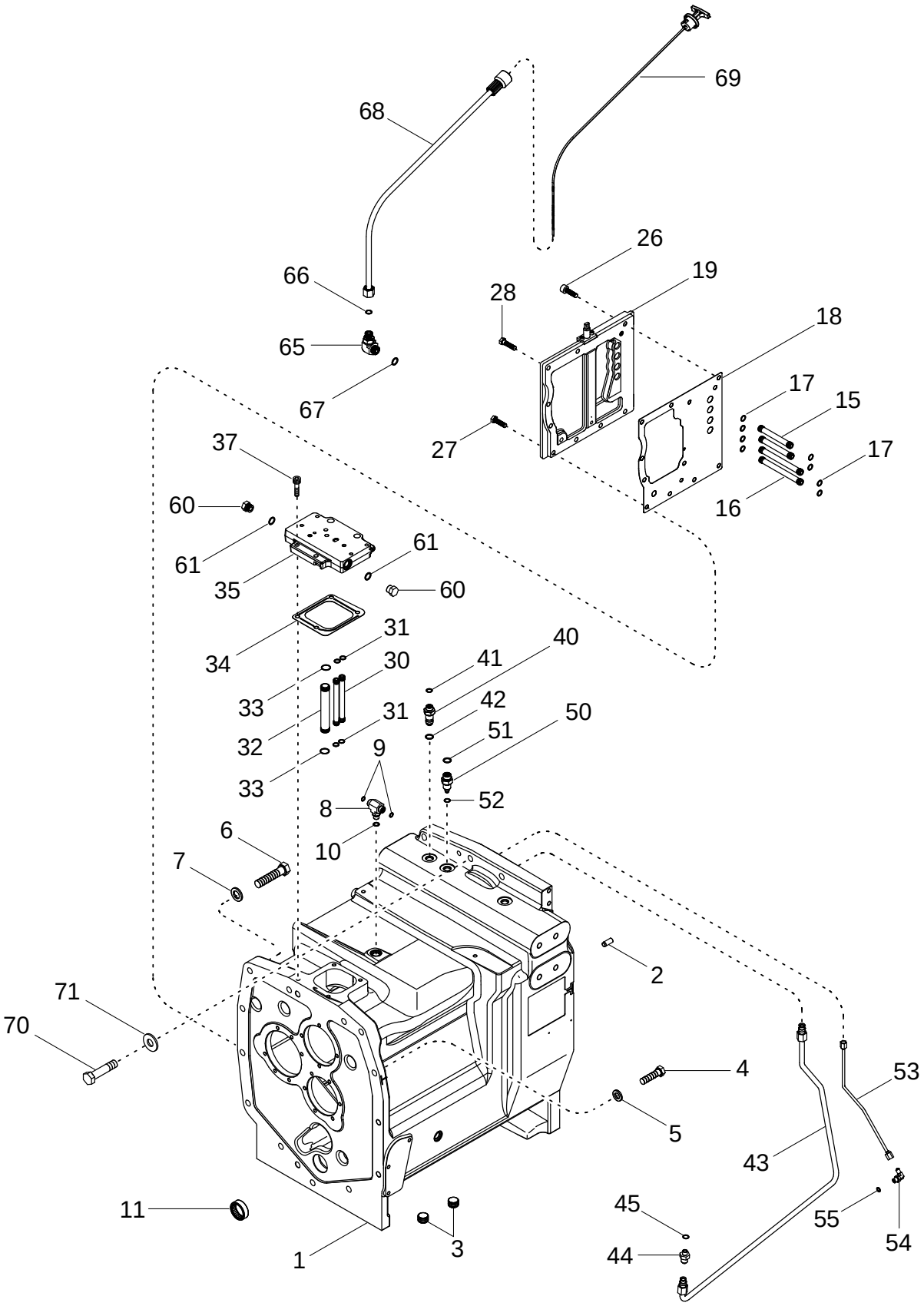

TRANSMISIÓN DE VELOCIDAD - ALOJAMIENTO, ASN AJB0355923
TRANSMISSÃO DA VELOCIDADE - ESTRUTURA, ASN AJB0355923
VERSNELLINGSTRANSMISSIE - BEHUIZING, ASN AJB0355923
HASTIGHEDSOVERFØRSEL - HUS, ASN AJB0355923

R	N	P.N.	MOD	Q	Description Denominacion	Descrizione Denominação	Description Beschrijving	Bezeichnung Beskrivelse	L.C.
1		87429567		1	HOUSING ASSY. Inc. 2, 3 CUBIERTA PRINCIPAL	ALLOGGIAM., COMPL. CARCAÇA CONJUNTO	CARTER (ASSEMBLE) HOUSING ASSY.	GEHAEUSE (KPLT.) HOUSING ASSY.	P479
2		837-12030		2	DOWEL 12 x 30 mm PITON	GRANO GUIA	PION STEL PEN	PAßTIFT DYVEL	P176
3		192792A1		2	PLUG 3/4 in TAPÓN	TAPPO BUJÃO	BOUCHON PLUG	STOPFEN PROP	050T
4		828-16060		7	SCREW M16 x 60 TORNILLO	VITE PARAFUSO	VIS SCHROEF	SCHRAUBE SKRUE	7450
5		896-11016		9	WASHER 17,5 x 30 x 4 mm ARANDELA	ROSETTA PIANA ANILHA	RONDELLE SLUITRING	SCHEIBE FLADSKIVE	9720
6		828-16090		4	SCREW M16 x 90; 10.9 TORNILLO	VITE PARAFUSO	VIS SCHROEF	SCHRAUBE SKRUE	7450
7		896-12016		4	WASHER 17,5 x 30 x 4 mm ARANDELA	ROSETTA PIANA ANILHA	RONDELLE SLUITRING	SCHEIBE FLADSKIVE	9720
8		201-401		1	TEE 11/16 fc sl x 9/16 Or, Inc. 9, 10 RACOR-T	PEZZO A T TE	TE TEE	T-STÜCK T-STYKKE	9020
9		238-6012		2	O-RING 3/8 ID x 1/16 JUNTA HERMETICA	ANELLO TOROIDALE ANEL O	JOINT TORIQUE O-RING	O-RING O-RING	7176
10		237-6006		1	O-RING 15/32 ID x 5/64 JUNTA HERMETICA	ANELLO TOROIDALE O-RING	JOINT THORIQUE O-RING	DICHTRING O-RING	055A
11		205369R91		1	BEARING, NEEDLE RODAMIENTO DE RPDIL	CUSCINETTO A RULLINI ROLAMENTO	ROULEMENT A AIGUILLE LAGER, NAALD	NADELLAGER NAALELEJE	344C
15		235976A2		2	TUBE TUBO	TUBETTO TUBO	TUBE BUISJE	SCHLAUCH RØR	195T
16		235977A2		2	TUBE TUBO	TUBETTO TUBO	TUBE BUISJE	SCHLAUCH RØR	195T
17		238-5014		8	O-RING 1/2 ID x 1/16 JUNTA HERMETICA	ANELLO TOROIDALE ANEL O	JOINT TORIQUE O-RING	O-RING O-RING	7176
18		87433655		1	GASKET JUNTA HERMETICA	GUARNIZIONE JUNTA	JOINT DICHTINGSSTUK	DICHTUNG, FLACH PAKNING	123G
19	1	87433653		1	PLATE ASSY. PLACA (CONJUNTO)	PIASTRA, COMPLESSIVO PLACA CONJUNTO	PLAQUE (ASSEMBLEE) PLATE ASSY.	PLATTE (KPLT.) PLATE ASSY.	P433
26		861-10030		2	SCREW M10 x 30; 12.9 TORNILLO	VITE PARAFUSO	VIS SCHROEF	SCHRAUBE SKRUE	7450
27		628-10035		8	SCREW M10 x 35; 10.9 TORNILLO	VITE PARAFUSO	VIS SCHROEF	SCHRAUBE SKRUE	7450
28		614-10040		2	SCREW M10 x 40; 8.8 TORNILLO	VITE PARAFUSO	VIS SCHROEF	SCHRAUBE SKRUE	P136
30		235977A2		2	TUBE TUBO	TUBETTO TUBO	TUBE BUISJE	SCHLAUCH RØR	195T
31		238-5014		4	O-RING 1/2 ID x 1/16 JUNTA HERMETICA	ANELLO TOROIDALE ANEL O	JOINT TORIQUE O-RING	O-RING O-RING	7176
32		300827A1		1	TUBE TUBO	TUBETTO TUBO	TUBE BUISJE	SCHLAUCH RØR	195T
33		238-5019		2	O-RING 13/16 ID x 1/16 JUNTA HERMETICA	ANELLO TOROIDALE ANEL O	JOINT TORIQUE O-RING	O-RING O-RING	7176

(1) See Figure 06-06

SPEED TRANSMISSION - HOUSING, ASN AJB0355923
CAMBIO VELOCITÀ - ALLOGGIAMENTO, ASN AJB0355923
CARTER DE LA BOÎTE DE VITESSES, ASN AJB0355923
WECHSELGETRIEBE-GEHÄUSE, ASN AJB0355923

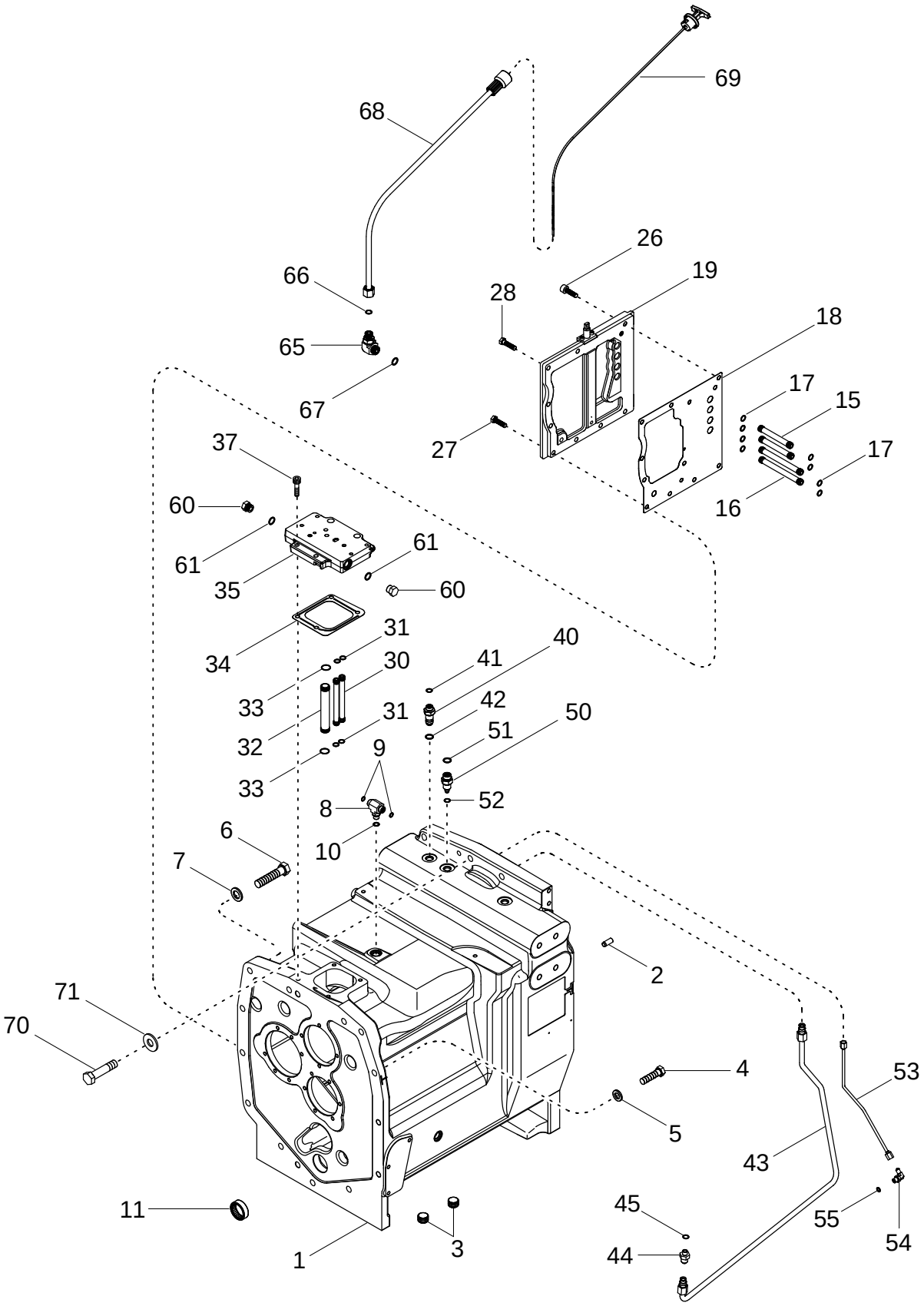

TRANSMISIÓN DE VELOCIDAD - ALOJAMIENTO, ASN AJB0355923
TRANSMISSÃO DA VELOCIDADE - ESTRUTURA, ASN AJB0355923
VERSNELLINGSTRANSMISSIE - BEHUIZING, ASN AJB0355923
HASTIGHEDSOVERFØRSEL - HUS, ASN AJB0355923

R	N	P.N.	MOD	Q	Description Denominacion	Descrizione Denominação	Description Beschrijving	Bezeichnung Beskrivelse	L.C.
34		87424932		1	GASKET JUNTA HERMETICA	GUARNIZIONE JUNTA	JOINT DICHTINGSSTUK	DICHTUNG, FLACH PAKNING	123G
35	1	87444975		1	PLATE ASSY. PLACA (CONJUNTO)	PIASTRA, COMPLESSIVO PLACA CONJUNTO	PLAQUE (ASSEMBLEE) PLATE ASSY.	PLATTE (KPLT.) PLATE ASSY.	P433
37		861-10035		4	SCREW M10 x 35; 12.9 TORNILLO	VITE PARAFUSO	VIS SCHROEF	SCHRAUBE SKRUE	7450
40	2	93103C1		1	UNION CONEXION	RACCORDO A GOMITO UNIAO	UNION KOPPELING	VERBAND FORSKRUNING	9560
41		238-6012		1	O-RING 3/8 ID x 1/16 JUNTA HERMETICA	ANELLO TOROIDALE ANEL O	JOINT TORIQUE O-RING	O-RING O-RING	7176
42		237-6008		1	O-RING 41/64 ID x 3/32 JUNTA HERMETICA	ANELLO TOROIDALE O-RING	JOINT THORIQUE O-RING	DICHTRING O-RING	055A
43	2	256955A2		1	TUBE TUBO	TUBETTO TUBO	TUBE BUISJE	SCHLAUCH RØR	195T
44	2	218-5351		1	CONNECTOR, HYD. 3/4 fl x 9/16 Or, Inc. 45 RACOR	RACCORDO IDRAULICO CONECTOR	RACCORD VERBINDING	STUTZEN FORSKRUNING	020R
45		237-6006		1	O-RING 15/32 ID x 5/64 JUNTA HERMETICA	ANELLO TOROIDALE O-RING	JOINT THORIQUE O-RING	DICHTRING O-RING	055A
50	2	93105C1		1	UNION CONEXION	RACCORDO A GOMITO UNIAO	UNION KOPPELING	VERBAND FORSKRUNING	9560
51		238-6014		1	O-RING 1/2 ID x 1/16 JUNTA HERMETICA	ANELLO TOROIDALE ANEL O	JOINT TORIQUE O-RING	O-RING O-RING	7176
52		237-6008		1	O-RING 41/64 ID x 3/32 JUNTA HERMETICA	ANELLO TOROIDALE O-RING	JOINT THORIQUE O-RING	DICHTRING O-RING	055A
53	2	311670A1		1	TUBE TUBO	TUBETTO TUBO	TUBE BUISJE	SCHLAUCH RØR	195T
54	2	218-5103		1	ELBOW 7/16 fl x adj Or, Inc. 55 CODO	GOMITO JOELHO	COUDE ELLEBOOG	KNIESTÜCK VINKELRØR	2940
55		237-6004		1	O-RING 23/64 ID x 5/64 JUNTA HERMETICA	ANELLO TOROIDALE ANEL O	JOINT TORIQUE O-RING	O-RING O-RING	7176
60	3	218-5156		2	PLUG 3/4 Or, Inc. 61 TAPÓN	TAPPO BUJÃO	BOUCHON PLUG	STOPFEN PROP	050T
61		237-6008		2	O-RING 41/64 ID x 3/32 JUNTA HERMETICA	ANELLO TOROIDALE O-RING	JOINT THORIQUE O-RING	DICHTRING O-RING	055A
65		700-305		1	ELBOW 13/16 fc sl x 18 Or, Inc. 66, 67 CODO	GOMITO JOELHO	COUDE ELLEBOOG	KNIESTÜCK VINKELRØR	2940
66		238-6014		1	O-RING 1/2 ID x 1/16 JUNTA HERMETICA	ANELLO TOROIDALE ANEL O	JOINT TORIQUE O-RING	O-RING O-RING	7176
67		637-63153		1	O-RING 15,3 ID x 2,2 JUNTA HERMETICA	ANELLO TOROIDALE O-RING	JOINT THORIQUE O-RING	DICHTRING O-RING	055A
68		295149A1		1	TUBE TUBO	TUBETTO TUBO	TUBE BUISJE	SCHLAUCH RØR	195T

(1) See Figure 06-07
(2) With Creep Speed
(3) Without Creep Speed

SPEED TRANSMISSION - HOUSING, ASN AJB0355923
CAMBIO VELOCITÀ - ALLOGGIAMENTO, ASN AJB0355923
CARTER DE LA BOÎTE DE VITESSES, ASN AJB0355923
WECHSELGETRIEBE-GEHÄUSE, ASN AJB0355923

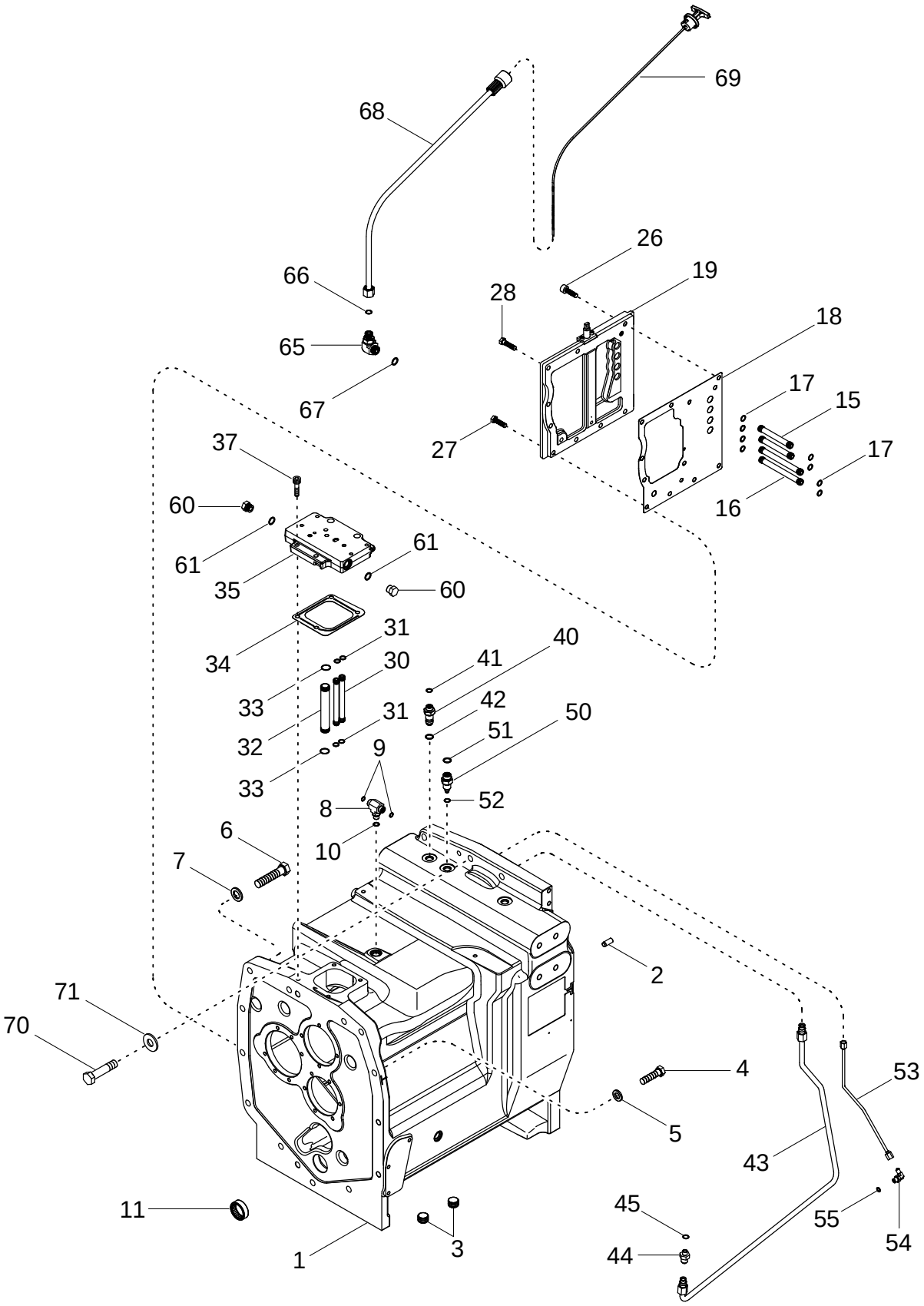

TRANSMISIÓN DE VELOCIDAD - ALOJAMIENTO, ASN AJB0355923
TRANSMISSÃO DA VELOCIDADE - ESTRUTURA, ASN AJB0355923
VERSNELLINGSTRANSMISSIE - BEHUIZING, ASN AJB0355923
HASTIGHEDSOVERFØRSEL - HUS, ASN AJB0355923

R	N	P.N.	MOD	Q	Description Denominacion	Descrizione Denominação	Description Beschrijving	Bezeichnung Beskrivelse	L.C.
69		295316A1		1	DIPSTICK VARILLA DE NIVEL	ASTA DI LIVELLO VARETA DE NIVEL	JAUGE DE NIVEAU PEILSTANG	MESSTAB MAALEPIND	P763
70		814-16080		2	SCREW M16 x 80 TORNILLO	VITE PARAFUSO	VIS SCHROEF	SCHRAUBE SKRUE	P136
71		896-12016		2	WASHER 17,5 x 30 x 4 mm ARANDELA	ROSETTA PIANA ANILHA	RONDELLE SLUITRING	SCHEIBE FLADSKIVE	9720

06-06		p1	11/04

PLATE ASSEMBLY - VALVE MOUNTING, LEFT HAND SIDE
GRUPPO PIASTRA DI MONTAGGIO VALVOLA, LATO SINISTRO
PLAQUE - MONTAGE DE DISTRIBUTEUR, CÔTÉ GAUCHE
VENTILBEFESTIGUNGSPLATTEN, LINKS

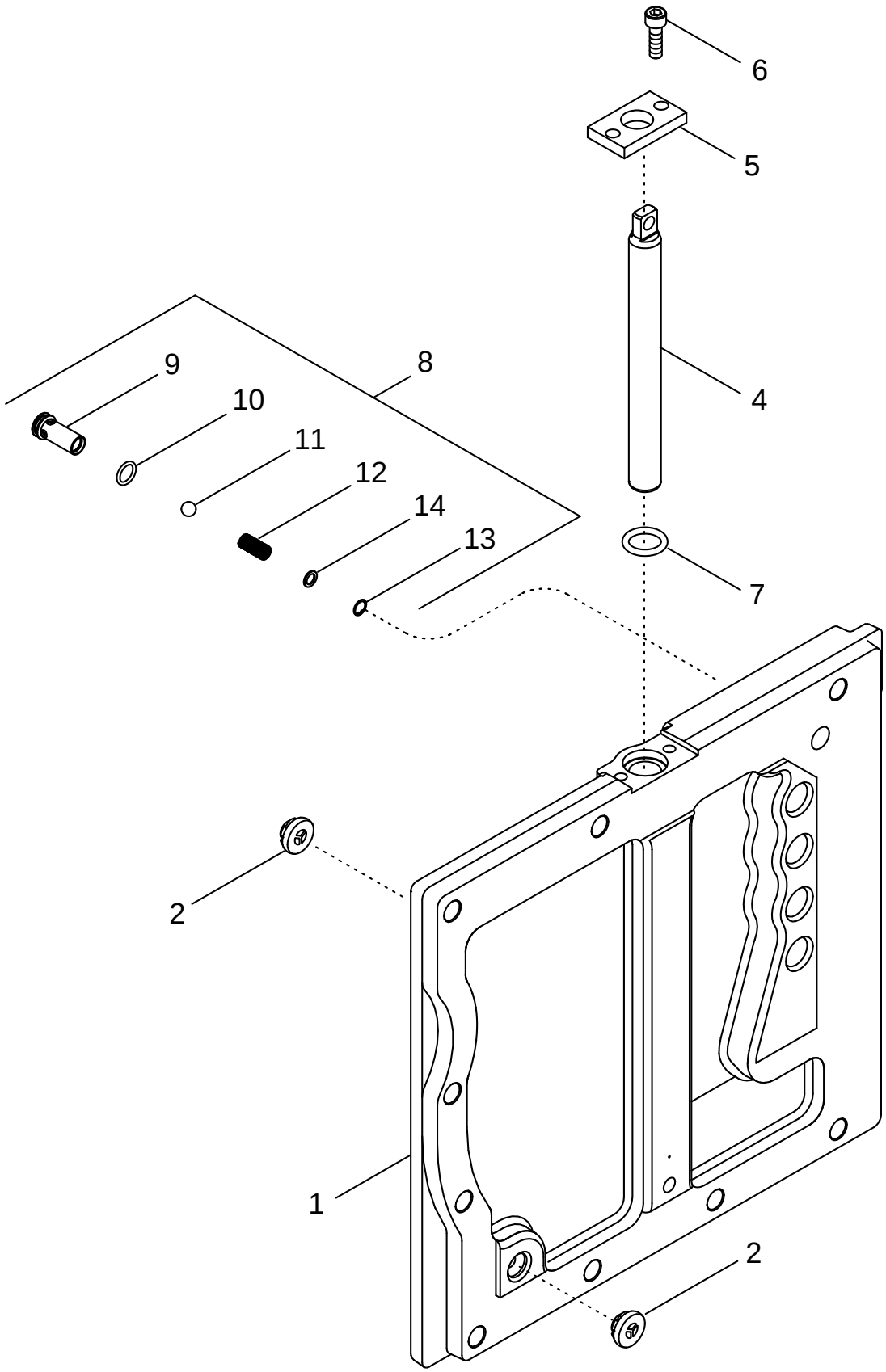

CONJUNTO DE PLACA - MONTAJE DE LA VÁLVULA AL LADO IZQUIERDO
CONJUNTO DA PLACA - SUPORTE DA VÁLVULA
PLAATCONSTRUCTIE - KLEPMONTAGE, LINKERKANT
PLADEENHED - VENTILOPHÆNG, VENSTRE SIDE

R	N	P.N.	MOD	Q	Description Denominacion	Descrizione Denominação	Description Beschrijving	Bezeichnung Beskrivelse	L.C.
		445535A2	a	1	PLATE ASSY. Inc. 1 - 14 PLACA (CONJUNTO)	PIASTRA, COMPLESSIVO PLACA CONJUNTO	PLAQUE (ASSEMBLEE) PLATE ASSY.	PLATTE (KPLT.) PLATE ASSY.	P433
		87433653	b	1	PLATE ASSY. Inc. 1 - 14 PLACA (CONJUNTO)	PIASTRA, COMPLESSIVO PLACA CONJUNTO	PLAQUE (ASSEMBLEE) PLATE ASSY.	PLATTE (KPLT.) PLATE ASSY.	P433
1		NSS		1	NOT SERVICED SEPARATELY Plate NO SE REPARA SEPARA	NON FORNITO SEPARAT NOT SERVICED SEPARA	NON FOURNI SEPAREMI NIET ALLEEN VERKRIJG	KEIN ERSATZTEIL NOT SERVICED SEPARA	064N
2		1994615C2		2	VALVE, CHECK VALVULA ANTIRRETORN	VALVOLA, DI RITEGNO VALVULA CHECAGEM	SOUPAPE ANTI RETOUR VALVE, CHECK	RUECKSCHLAGVENTIL VALVE, CHECK	P140
3		221579A1		1	PLUG TAPÓN	TAPPO BUJÃO	BOUCHON PLUG	STOPFEN PROP	050T
4		234802A2		1	PIN PERNO	PERNO PERNO	AXE PEN	BOLZEN STIFT	080P
5		315904A1		1	PLATE, RETAINING PLACA DE SUJECION	PIASTRA DI FISSAGGIO PLACA DE FIXACAO	PLAQUE DE SERRAGE KLEMPLAAT	KLEMMPLATTE FASTSPAENDINGSPLAD	114P
6		863-6020		2	SCREW M6 x 20; 12.9 TORNILLO	VITE PARAFUSO	VIS SCHROEF	SCHRAUBE SKRUE	7450
7		238-5208		1	O-RING 5/8 ID x 1 8 JUNTA HERMETICA	ANELLO TOROIDALE O-RING	JOINT THORIQUE O-RING	DICHTRING O-RING	055A
8		445492A2		1	VALVE, CHECK Inc. 9 - 14 VALVULA DE CIERRE	VALVOLA, DI RITEGNO VALVULA CHECAGEM	CLAPET ANTI-RETOUR INZETSTUK	RÜCKSCHLAGVENTIL KONTRAVENTIL	P394
9		NSS		1	NOT SERVICED SEPARATELY Body NO SE REPARA SEPARA	NON FORNITO SEPARAT NOT SERVICED SEPARA	NON FOURNI SEPAREMI NIET ALLEEN VERKRIJG	KEIN ERSATZTEIL NOT SERVICED SEPARA	064N
10		238-5012		1	O-RING 3/8 ID x 1/16 JUNTA HERMETICA	ANELLO TOROIDALE ANEL O	JOINT TORIQUE O-RING	O-RING O-RING	7176
11		211-1009		1	BALL 9/32; 24,CRS BOLA	SFERA ESFERA	BILLE KOGEL	KUGEL KUGLE	0460
12		445494A1		1	SPRING, VALVE MUELLE, VALVULA	MOLLA, VALVOLA MUELLE, VÁLVULA	RESSORT, SOUPAPE SPRING, VALVE	VENTILFEDER VENTILFJEDER	P463
13		100-2131		1	SNAP RING No. 31 ANILLO DE CIERRE	ANELLO ELASTICO ANEL TRAVA	ANNEAU-D'ARRET SNAP RING	SICHERUNGSRING SNAP RING	P345
14		86988656		1	WASHER, SPRING ARANDELA ABANICO	MOLLA BELLEVILLE ARRUELA MOLA	RONDELLE BELLEVILLE WASHER, SPRING	FEDERSCHEIBE BELLEVILLEVASKER	P692

(a) BSN AJB0304805
(b) ASN AJB0304805

06-07		p1	11/04

PLATE ASSEMBLY - VALVE MOUNTING, TOP
GRUPPO DELLA PIASTRA - SUPPORTO DELLA VALVOLA
PLAQUE DE MONTAGE DE LA SOUPAPE
VENTILBEFESTIGUNGSPLATTEN

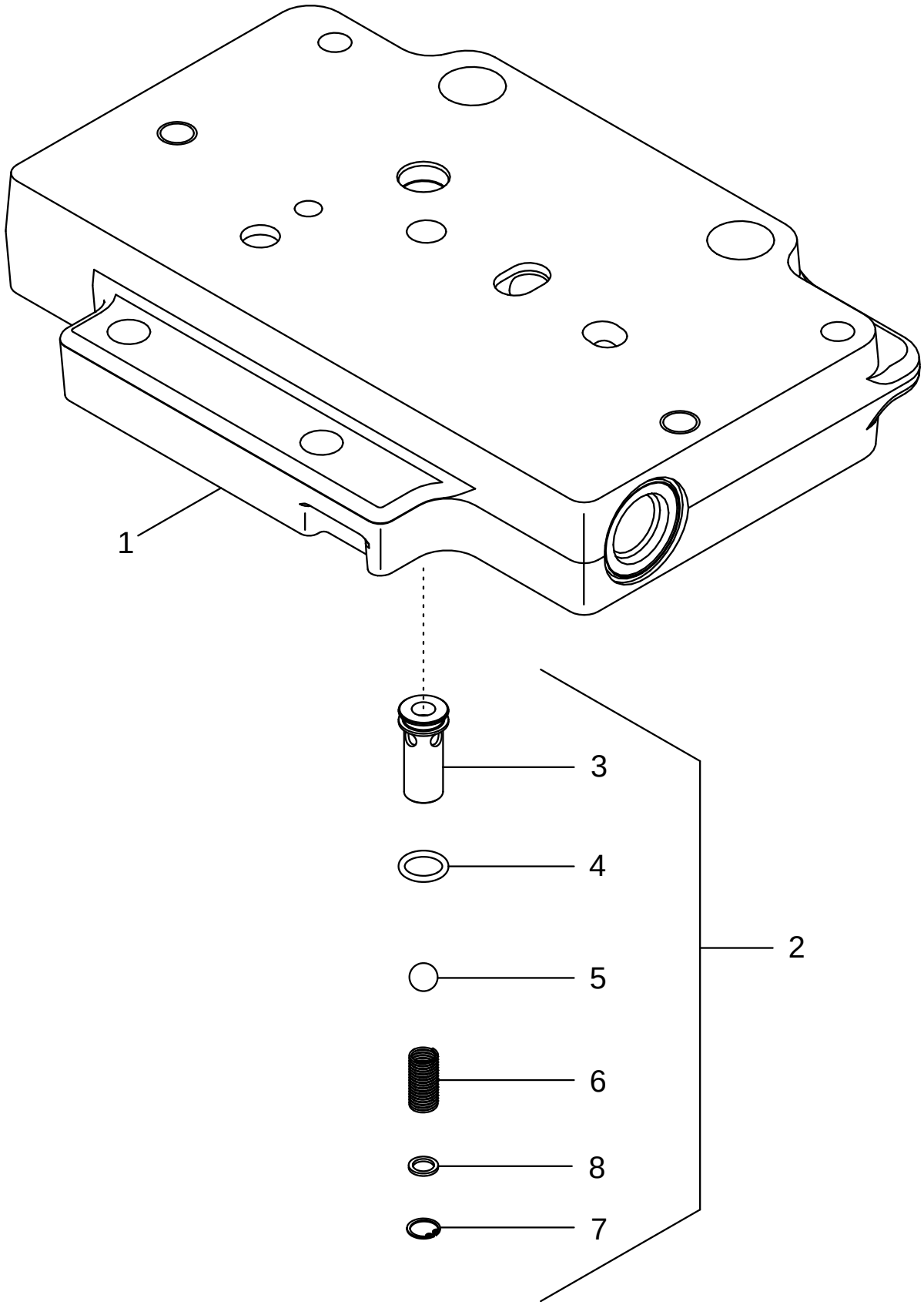

CONJUNTO DE LA PLACA - MONTAJE DE LA VÁLVULA
CONJUNTO DA PLACA - SUPORTE DA VÁLVULA
PLAATCONSTRUCTIE - KLEPBEVESTIGING
PLADESAMLING - VENTILMONTERING

R	N	P.N.	MOD	Q	Description Denominacion	Descrizione Denominação	Description Beschrijving	Bezeichnung Beskrivelse	L.C.
		445533A2	a	1	PLATE ASSY. Inc. 1 - 8 PLACA (CONJUNTO)	PIASTRA, COMPLESSIVO PLACA CONJUNTO	PLAQUE (ASSEMBLEE) PLATE ASSY.	PLATTE (KPLT.) PLATE ASSY.	P433
		87444975	b	1	PLATE ASSY. Inc. 1 - 8 PLACA (CONJUNTO)	PIASTRA, COMPLESSIVO PLACA CONJUNTO	PLAQUE (ASSEMBLEE) PLATE ASSY.	PLATTE (KPLT.) PLATE ASSY.	P433
1		445532A2	a	1	PLATE PLACA	PIASTRA CHAPA	PLAQUE PLAAT	PLATTE PLADE	105P
1		87444976	b	1	PLATE PLACA	PIASTRA CHAPA	PLAQUE PLAAT	PLATTE PLADE	105P
2		445492A2		2	VALVE, CHECK Inc. 3 - 8 VALVULA DE CIERRE	VALVOLA, DI RITEGNO VALVULA CHECAGEM	CLAPET ANTI-RETOUR INZETSTUK	RÜCKSCHLAGVENTIL KONTRAVENTIL	P394
3		NSS		1	NOT SERVICED SEPARATELY Body NO SE REPARA SEPARA	NON FORNITO SEPARAT NOT SERVICED SEPARA	NON FOURNI SEPAREMI NIET ALLEEN VERKRIJG	KEIN ERSATZTEIL NOT SERVICED SEPARA	064N
4		238-5012		1	O-RING 3/8 ID x 1/16 JUNTA HERMETICA	ANELLO TOROIDALE ANEL O	JOINT TORIQUE O-RING	O-RING O-RING	7176
5		211-1009		1	BALL 9/32; 24,CRS BOLA	SFERA ESFERA	BILLE KOGEL	KUGEL KUGLE	0460
6		445494A1		1	SPRING, VALVE MUELLE, VALVULA	MOLLA, VALVOLA MUELLE, VÁLVULA	RESSORT, SOUPAPE SPRING, VALVE	VENTILFEDER VENTILFJEDER	P463
7		100-2131		1	SNAP RING No. 31 ANILLO DE CIERRE	ANELLO ELASTICO ANEL TRAVA	ANNEAU-D'ARRET SNAP RING	SICHERUNGSRING SNAP RING	P345
8		86988656		1	WASHER, SPRING ARANDELA ABANICO	MOLLA BELLEVILLE ARRUELA MOLA	RONDELLE BELLEVILLE WASHER, SPRING	FEDERSCHEIBE BELLEVILLEVASKER	P692

(a) BSN AJB0355338
(b) ASN AJB0355338

SPEED TRANSMISSION - INPUT SHAFT WITHOUT CREEP SPEED
CAMBIO VELOCITÀ - ALBERO D'ENTRATA SENZA MARCIA SUPER RIDOTTA
BOÎTE DE VITESSES - ARBRE D'ADMISSION SANS VITESSES LENTES
WECHSELGETRIEBE - EINGANGSWELLE OHNE LANGSAMGRUPPE

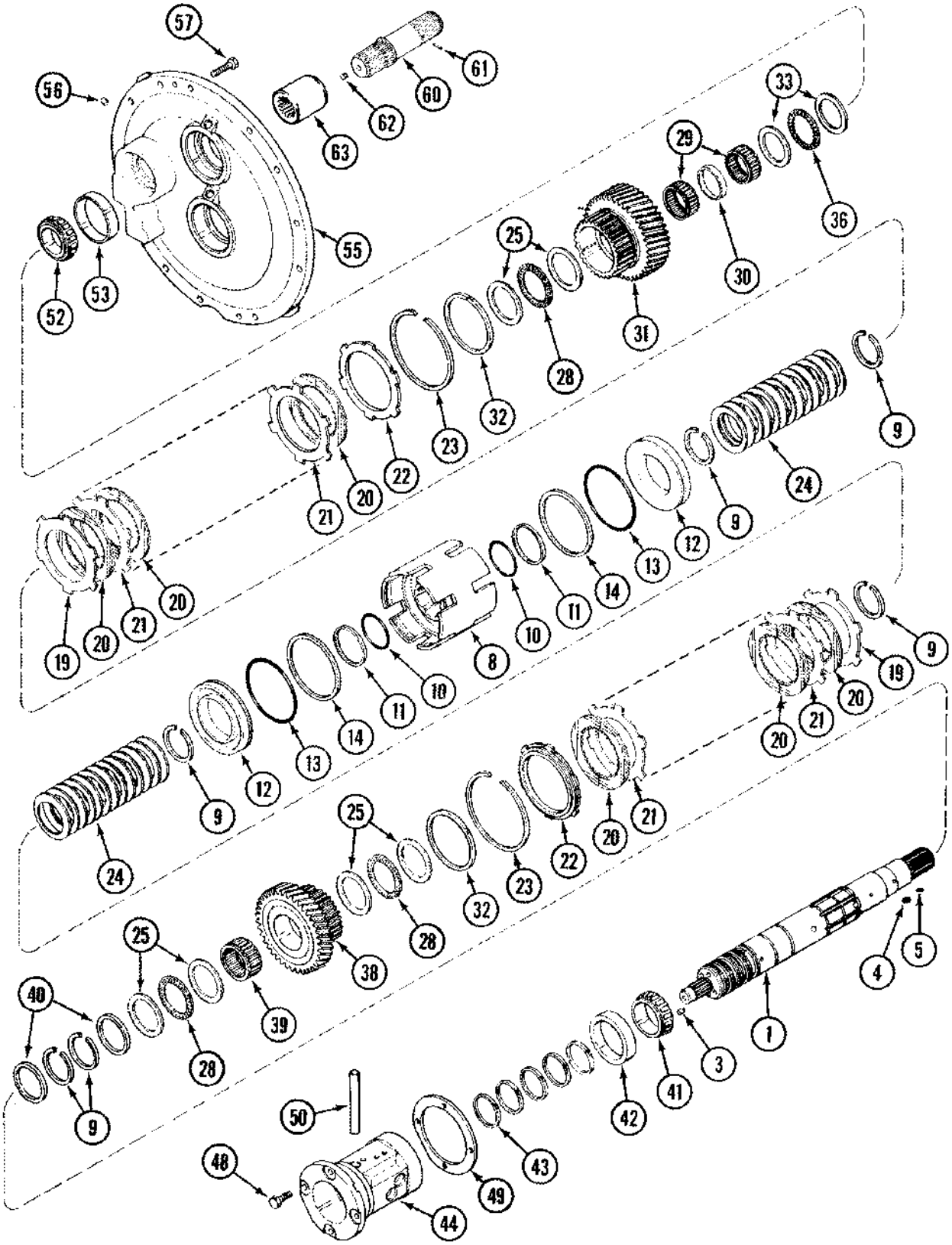

TRANSMISIÓN DE VELOCIDAD - EJE DE ENTRADA SIN VELOCIDAD ULTRALENTA
TRANSMISSÃO DA VELOCIDADE - EIXO DE ENTRADA SEM REDUÇÃO DE VELOCIDADE
VERSNELLINGSTRANSMISSIE - INVOERAS ZONDER KRUIPVERSNELLING
HASTIGHEDSOVERFØRSEL - INDGANGSAKSEL UDEN KRYBEGEAR

R	N	P.N.	MOD	Q	Description Denominacion	Descrizione Denominação	Description Beschrijving	Bezeichnung Beskrivelse	L.C.
1		225199A1		1	SHAFT ASSY. Inc. 3 - 5 ARBOL (CONJUNTO)	ALBERO, COMPLESSIVO EIXO CONJUNTO	ARBRE (ASSEMBLE) SHAFT ASSY.	WELLE (KPLT.) SHAFT ASSY.	P431
3		1342851C1		2	PLUG 10 mm TAPÓN	TAPPO BUJÃO	BOUCHON PLUG	STOPFEN PROP	050T
4		1963888C1		2	PIN PERNO	PERNO PERNO	AXE PEN	BOLZEN STIFT	080P
5		38-3605		4	PIN 3/32 x 5/16 PERNO	PERNO PERNO	AXE PEN	BOLZEN STIFT	080P
8		86987595		1	CARRIER EJE DE SATELITES	PORTASATELLITI PORTA-SATELITES	PILIER, SOUTIEN SATELIETDRAGER	PLANETENTRÄGER SPIDSHJULSHOLDER	196P
9		93350C1		6	RING ANILLO	ANELLO ANEL	ANNEAU RING	RING RING	045A
10		1286081C1		2	O-RING JUNTA HERMETICA	ANELLO TOROIDALE O-RING	JOINT THORIQUE O-RING	DICHTRING O-RING	055A
11		1286076C1		2	RING ANILLO	ANELLO ANEL	ANNEAU RING	RING RING	045A
12		242492A5		2	PISTON EMBOLO	STANTUFFO PISTAO	PISTON ZUIGER	KOLBEN STEMPEL	235S
13		1286083C1		2	O-RING JUNTA HERMETICA	ANELLO TOROIDALE O-RING	JOINT THORIQUE O-RING	DICHTRING O-RING	055A
14		1286079C1		2	RING ANILLO	ANELLO ANEL	ANNEAU RING	RING RING	045A
19		128114A1		2	DISC DISCO	DISCO DISCO	DISQUE SCHIJF	SCHEIBE NAV	060D
20		86990276		14	DISC DISCO	DISCO DISCO	DISQUE SCHIJF	SCHEIBE NAV	060D
21		92934C2		12	DISC DISCO	DISCO DISCO	DISQUE SCHIJF	SCHEIBE NAV	060D
22		1342645C3		2	DISC, CLUTCH DISCO (CONJUNTO)	DISCO, FRIZIONE DISCO CONJUNTO	DISQUE-D'EMBRAYAGE DISC, CLUTCH	KUPPLUNGSCHEIBE DISC, CLUTCH	P485
23		1285996C1		2	RING, SNAP ANILLO DE RESORTE	ANELLO ELASTICO ANEL	ANNEAU D'ARRÊT RING, SNAP	SICHERUNGSRING LÅSERING	054A
24		1286012C2		26	WASHER ARANDELA	ROSETTA PIANA ANILHA	RONDELLE SLUITRING	BEILAGSCHEIBE FLADSKIVE	131R
25		1286043C1		6	WASHER, THRUST ARANDELA DE TOPE	RONDELLA, DI SPINTA ANILHA DE ENCOSTO	RONDELLE DE BUTÉE SLUITRING DRUKPLAAT	DRUCKSCHEIBE TRYKSKIVE	023R
28		572182R1		3	BEARING, THRUST COJINETE DE EMBRAGU	CUSCINETTO, REGGISP ROL. ENCOSTO	BUTÉE A BILLES LAGER, DRUKKOPPELIN	DRUKLAGER KUGLELEJE	342C
29		80907C1		2	BEARING, NEEDLE RODAMIENTO DE RPDIL	CUSCINETTO A RULLINI ROLAMENTO	ROULEMENT A AIGUILLE LAGER, NAALD	NADELLAGER NAALELEJE	344C
30		93297C1		1	SPACER SEPARADOR	DISTANZIALE ESPACADOR	ENTRETOISE AFSTANDSRING	DISTANZSTÜCK AFSTANDSSTYKKE	075D
31		1342495C1		1	PINION 37T PINON	PIGNONE PINHAO	PIGNON PINION	RITZEL PINION	P045
32		1286052C1		2	RING ANILLO	ANELLO ANEL	ANNEAU RING	RING RING	045A
33		1286042C1		2	WASHER, THRUST ARANDELA DE TOPE	RONDELLA, DI SPINTA ANILHA DE ENCOSTO	RONDELLE DE BUTÉE SLUITRING DRUKPLAAT	DRUCKSCHEIBE TRYKSKIVE	023R

SPEED TRANSMISSION - INPUT SHAFT WITHOUT CREEP SPEED
CAMBIO VELOCITÀ - ALBERO D'ENTRATA SENZA MARCIA SUPER RIDOTTA
BOÎTE DE VITESSES - ARBRE D'ADMISSION SANS VITESSES LENTES
WECHSELGETRIEBE - EINGANGSWELLE OHNE LANGSAMGRUPPE

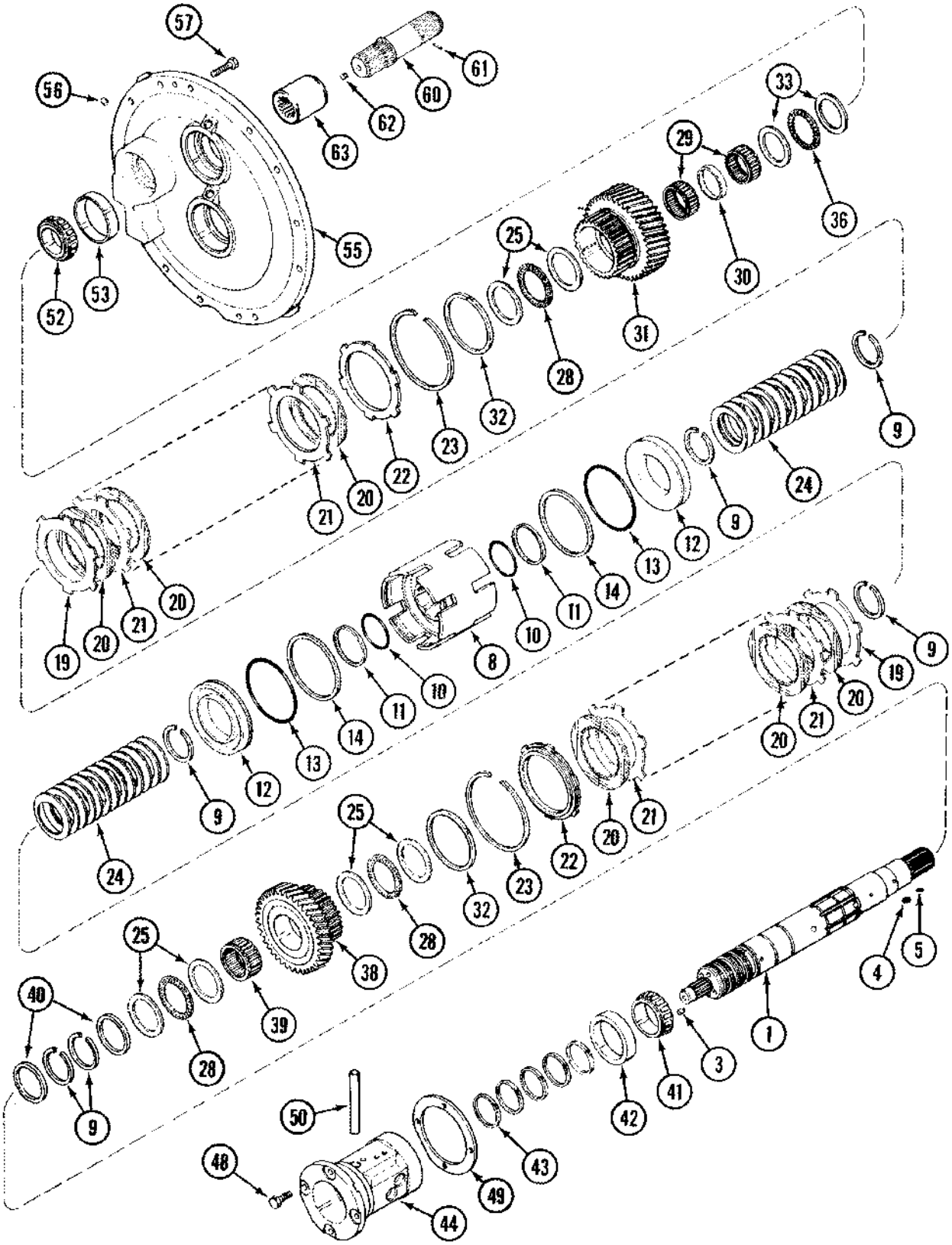

TRANSMISIÓN DE VELOCIDAD - EJE DE ENTRADA SIN VELOCIDAD ULTRALENTA
TRANSMISSÃO DA VELOCIDADE - EIXO DE ENTRADA SEM REDUÇÃO DE VELOCIDADE
VERSNELLINGSTRANSMISSIE - INVOERAS ZONDER KRUIPVERSNELLING
HASTIGHEDSOVERFØRSEL - INDGANGSAKSEL UDEN KRYBEGEAR

R	N	P.N.	MOD	Q	Description Denominacion	Descrizione Denominação	Description Beschrijving	Bezeichnung Beskrivelse	L.C.
36		K620185		1	BEARING, THRUST COJINETE DE EMBRAGU	CUSCINETTO, REGGISP ROL. ENCOSTO	BUTÉE A BILLES LAGER, DRUKKOPPELIN	DRUKLAGER KUGLELEJE	342C
38		1285985C1		1	GEAR, WHEEL 34T RUEDA DENTADA	RUOTA DENTATA RODA DENTADA	ROUE-DENTEE GEAR-WHEEL	ZAHNRAD GEAR-WHEEL	Z624
39		1286016C1		1	BEARING, NEEDLE RODAMIENTO DE RPDIL	CUSCINETTO A RULLINI ROLAMENTO	ROULEMENT A AIGUILLE LAGER, NAALD	NADELLAGER NAALELEJE	344C
40		1286039C1		2	SPACER SEPARADOR	DISTANZIALE ESPACADOR	ENTRETOISE AFSTANDSRING	DISTANZSTÜCK AFSTANDSSTYKKE	075D
41		364465C1		1	BEARING, CONE CONO	CONO DEL CUSCINETTO CONE	CONE DE ROULEMENT KEGEL	LAGERKONUS LEJEKONUS	237C
42		258452C1		1	BEARING, CUP PISTA DE RODAMIENTO	ANELLO CUSCINETTO ANILHA ROLAMENTO	CUVETTE ROULEMENT LAGER, CUP	LAGERSCHALE LEJERING	062A
43		1286026C1		5	RING ANILLO	ANELLO ANEL	ANNEAU RING	RING RING	045A
44		254574A2		1	CAGE JAULA	GABBIA GAIOLA	CAGE CAGE	KÄFIG KUGLEHOLDER	1270
48		613-10030		4	SCREW M10 x 30 TORNILLO	VITE PARAFUSO	VIS SCHROEF	SCHRAUBE SKRUE	7450
49		1286071C1		2	SHIM 0,08 mm SUPLEMENTO	SPESSORE CALCO DE AFINACAO	CALE D'EPAISSEUR DIKTEPLAAT	EINSTELLSCHEIBCHEN MELLEMLAEG	198S
49		1286072C1		2	SHIM 0,10 mm SUPLEMENTO	SPESSORE CALCO DE AFINACAO	CALE D'EPAISSEUR DIKTEPLAAT	EINSTELLSCHEIBCHEN MELLEMLAEG	198S
49		1286073C1		2	SHIM 0,13 mm SUPLEMENTO	SPESSORE CALCO DE AFINACAO	CALE D'EPAISSEUR DIKTEPLAAT	EINSTELLSCHEIBCHEN MELLEMLAEG	198S
49		1286074C1		2	SHIM 0,30 mm SUPLEMENTO	SPESSORE CALCO DE AFINACAO	CALE D'EPAISSEUR DIKTEPLAAT	EINSTELLSCHEIBCHEN MELLEMLAEG	198S
49		1286075C1		2	SHIM 0,76 mm SUPLEMENTO	SPESSORE CALCO DE AFINACAO	CALE D'EPAISSEUR DIKTEPLAAT	EINSTELLSCHEIBCHEN MELLEMLAEG	198S
50		1981207C1		1	TUBE TUBO	TUBETTO TUBO	TUBE BUISJE	SCHLAUCH RØR	195T
52		627639R1		1	BEARING, CONE CONO	CONO DEL CUSCINETTO CONE	CONE DE ROULEMENT KEGEL	LAGERKONUS LEJEKONUS	237C
53		ST970		1	BEARING, CUP PISTA DE RODAMIENTO	ANELLO CUSCINETTO ANILHA ROLAMENTO	CUVETTE ROULEMENT LAGER, CUP	LAGERSCHALE LEJERING	062A
55		258470A2		1	SUPPORT Inc. 8 SOPORTE	SUPPORTO SUPORTE	SUPPORT STEUN	STÜTZE BESLAG	300S
56		37-188		8	PIN 1/2 x 1/2 in PERNO	PERNO PERNO	AXE PEN	BOLZEN STIFT	080P
57		613-12040		11	SCREW M12 x 40 TORNILLO	VITE PARAFUSO	VIS SCHROEF	SCHRAUBE SKRUE	7450
60		282726A1		1	SHAFT Inc. 61, 62 EJE	ALBERO VEIO	ARBRE AS	WELLE AKSEL	7590
61		38-3605		1	PIN 3/32 x 5/16 PERNO	PERNO PERNO	AXE PEN	BOLZEN STIFT	080P
62		284151A1		1	SCREW M10 x 10 TORNILLO	VITE PARAFUSO	VIS SCHROEF	SCHRAUBE SKRUE	7450
63		226637A1		1	COUPLING, SPLINED MANGUITO ACOPLAMIEI	ATTACO, SCANALATO ACOPLAMENTO DISTRIE	MANCHON CANNELÉE COUPLING, SPLINED	KEILVERBINDUNG MANGENOTKOBLING	Z224

SPEED TRANSMISSION - INPUT SHAFT WITH CREEP SPEED
CAMBIO VELOCITÀ - ALBERO D'ENTRATA CON MARCIA SUPER RIDOTTA
BOÎTE DE VITESSES - ARBRE D'ADMISSION AVEC VITESSES LENTES
WECHSELGETRIEBE - EINGANGSWELLE MIT LANGSAMGRUPPE

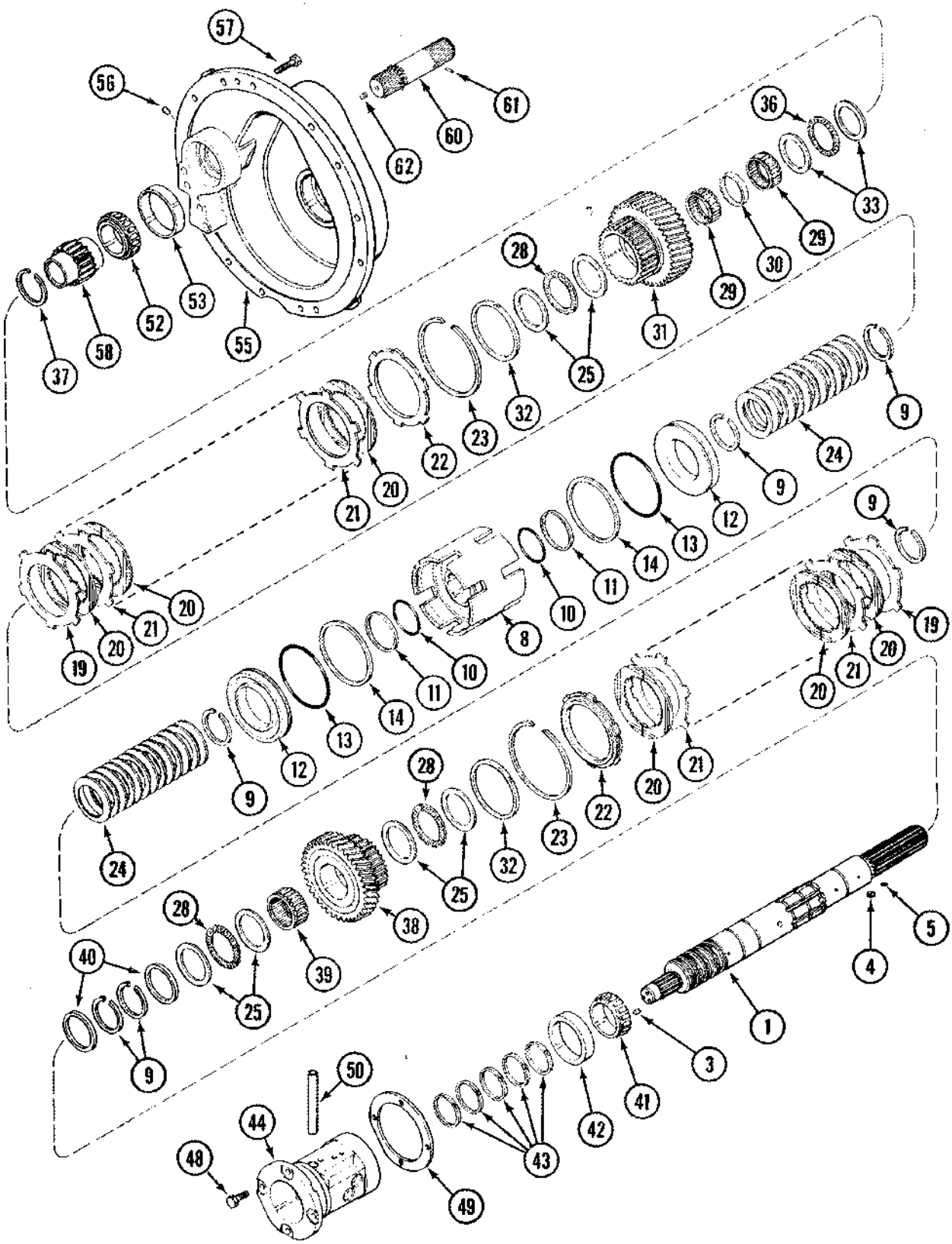

TRANSMISIÓN DE VELOCIDAD - EJE DE ENTRADA CON VELOCIDAD ULTRALENTA
TRANSMISSÃO DA VELOCIDADE - EIXO DE ENTRADA COM REDUÇÃO DE VELOCIDADE
VERSNELLINGSTRANSMISSIE - INVOERAS MET KRUIPVERSNELLING
HASTIGHEDSOVERFØRSEL - INDGANGSAKSEL MED KRYBEGEAR

R	N	P.N.	MOD	Q	Description Denominacion	Descrizione Denominação	Description Beschrijving	Bezeichnung Beskrivelse	L.C.
1		225200A1		1	SHAFT ASSY. Inc. 3 - 5 ARBOL (CONJUNTO)	ALBERO, COMPLESSIVO EIXO CONJUNTO	ARBRE (ASSEMBLE) SHAFT ASSY.	WELLE (KPLT.) SHAFT ASSY.	P431
3		1342851C1		2	PLUG 10 mm TAPÓN	TAPPO BUJÃO	BOUCHON PLUG	STOPFEN PROP	050T
4		1963888C1		2	PIN PERNO	PERNO PERNO	AXE PEN	BOLZEN STIFT	080P
5		38-3605		5	PIN 3/32 x 5/16 PERNO	PERNO PERNO	AXE PEN	BOLZEN STIFT	080P
8		86987595		1	CARRIER EJE DE SATELITES	PORTASATELLITI PORTA-SATELITES	PILIER, SOUTIEN SATELIETDRAGER	PLANETENTRÄGER SPIDSHJULSHOLDER	196P
9		93350C1		6	RING ANILLO	ANELLO ANEL	ANNEAU RING	RING RING	045A
10		1286081C1		2	O-RING JUNTA HERMETICA	ANELLO TOROIDALE O-RING	JOINT THORIQUE O-RING	DICHTRING O-RING	055A
11		1286076C1		2	RING ANILLO	ANELLO ANEL	ANNEAU RING	RING RING	045A
12		242492A5		2	PISTON EMBOLO	STANTUFFO PISTAO	PISTON ZUIGER	KOLBEN STEMPEL	235S
13		1286083C1		2	O-RING JUNTA HERMETICA	ANELLO TOROIDALE O-RING	JOINT THORIQUE O-RING	DICHTRING O-RING	055A
14		1286079C1		2	RING ANILLO	ANELLO ANEL	ANNEAU RING	RING RING	045A
19		128114A1		2	DISC DISCO	DISCO DISCO	DISQUE SCHIJF	SCHEIBE NAV	060D
20		86990276		14	DISC DISCO	DISCO DISCO	DISQUE SCHIJF	SCHEIBE NAV	060D
21		92934C2		12	DISC DISCO	DISCO DISCO	DISQUE SCHIJF	SCHEIBE NAV	060D
22		1342645C3		2	DISC, CLUTCH DISCO (CONJUNTO)	DISCO, FRIZIONE DISCO CONJUNTO	DISQUE-D'EMBRAYAGE DISC, CLUTCH	KUPPLUNGSCHEIBE DISC, CLUTCH	P485
23		1285996C1		2	RING, SNAP ANILLO DE RESORTE	ANELLO ELASTICO ANEL	ANNEAU D'ARRÊT RING, SNAP	SICHERUNGSRING LÅSERING	054A
24		1286012C2		26	WASHER ARANDELA	ROSETTA PIANA ANILHA	RONDELLE SLUITRING	BEILAGSCHEIBE FLADSKIVE	131R
25		1286043C1		6	WASHER, THRUST ARANDELA DE TOPE	RONDELLA, DI SPINTA ANILHA DE ENCOSTO	RONDELLE DE BUTÉE SLUITRING DRUKPLAAT	DRUCKSCHEIBE TRYKSKIVE	023R
28		572182R1		3	BEARING, THRUST COJINETE DE EMBRAGU	CUSCINETTO, REGGISP ROL. ENCOSTO	BUTÉE A BILLES LAGER, DRUKKOPPELIN	DRUKLAGER KUGLELEJE	342C
29		80907C1		2	BEARING, NEEDLE RODAMIENTO DE RPDIL	CUSCINETTO A RULLINI ROLAMENTO	ROULEMENT A AIGUILLE LAGER, NAALD	NADELLAGER NAALELEJE	344C
30		93297C1		1	SPACER SEPARADOR	DISTANZIALE ESPACADOR	ENTRETOISE AFSTANDSRING	DISTANZSTÜCK AFSTANDSSTYKKE	075D
31		1342495C1		1	PINION 37T PINON	PIGNONE PINHAO	PIGNON PINION	RITZEL PINION	P045
32		1286052C1		2	RING ANILLO	ANELLO ANEL	ANNEAU RING	RING RING	045A
33		1286042C1		2	WASHER, THRUST ARANDELA DE TOPE	RONDELLA, DI SPINTA ANILHA DE ENCOSTO	RONDELLE DE BUTÉE SLUITRING DRUKPLAAT	DRUCKSCHEIBE TRYKSKIVE	023R

SPEED TRANSMISSION - INPUT SHAFT WITH CREEP SPEED
CAMBIO VELOCITÀ - ALBERO D'ENTRATA CON MARCIA SUPER RIDOTTA
BOÎTE DE VITESSES - ARBRE D'ADMISSION AVEC VITESSES LENTES
WECHSELGETRIEBE - EINGANGSWELLE MIT LANGSAMGRUPPE

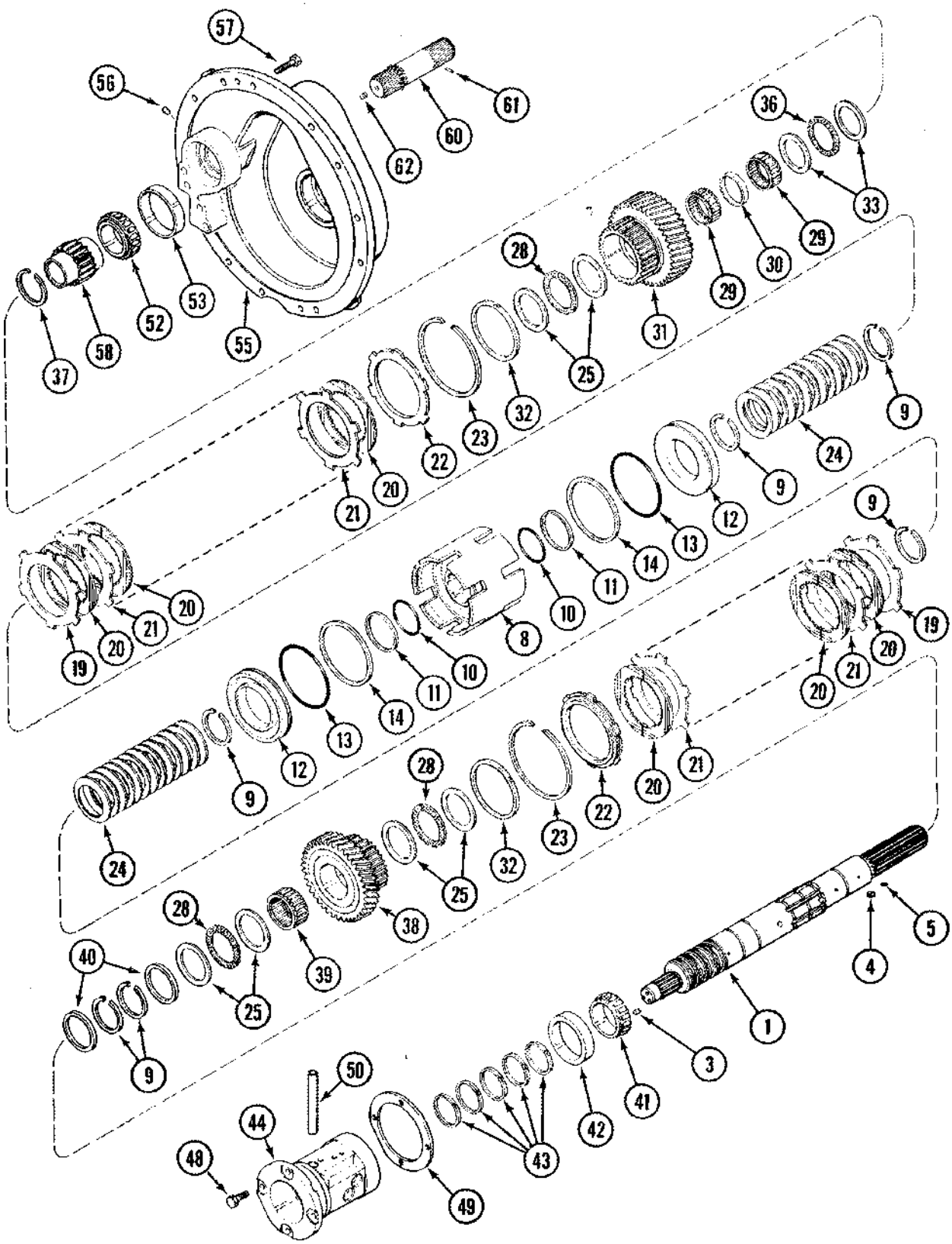

TRANSMISIÓN DE VELOCIDAD - EJE DE ENTRADA CON VELOCIDAD ULTRALENTA
TRANSMISSÃO DA VELOCIDADE - EIXO DE ENTRADA COM REDUÇÃO DE VELOCIDADE
VERSNELLINGSTRANSMISSIE - INVOERAS MET KRUIPVERSNELLING
HASTIGHEDSOVERFØRSEL - INDGANGSAKSEL MED KRYBEGEAR

R	N	P.N.	MOD	Q	Description Denominacion	Descrizione Denominação	Description Beschrijving	Bezeichnung Beskrivelse	L.C.
36		K620185		1	BEARING, THRUST COJINETE DE EMBRAGU	CUSCINETTO, REGGISP ROL. ENCOSTO	BUTÉE A BILLES LAGER, DRUKKOPPELIN	DRUKLAGER KUGLELEJE	342C
37		92793C1		1	RING ANILLO	ANELLO ANEL	ANNEAU RING	RING RING	045A
38		1285985C1		1	GEAR, WHEEL 34T RUEDA DENTADA	RUOTA DENTATA RODA DENTADA	ROUE-DENTEE GEAR-WHEEL	ZAHNRAD GEAR-WHEEL	Z624
39		1286016C1		1	BEARING, NEEDLE RODAMIENTO DE RPDIL	CUSCINETTO A RULLINI ROLAMENTO	ROULEMENT A AIGUILLE LAGER, NAALD	NADELLAGER NAALELEJE	344C
40		1286039C1		2	SPACER SEPARADOR	DISTANZIALE ESPACADOR	ENTRETOISE AFSTANDSRING	DISTANZSTÜCK AFSTANDSSTYKKE	075D
41		364465C1		1	BEARING, CONE CONO	CONO DEL CUSCINETTO CONE	CONE DE ROULEMENT KEGEL	LAGERKONUS LEJEKONUS	237C
42		258452C1		1	BEARING, CUP PISTA DE RODAMIENTO	ANELLO CUSCINETTO ANILHA ROLAMENTO	CUVETTE ROULEMENT LAGER, CUP	LAGERSCHALE LEJERING	062A
43		1286026C1		5	RING ANILLO	ANELLO ANEL	ANNEAU RING	RING RING	045A
44		254574A2		1	CAGE JAULA	GABBIA GAIOLA	CAGE CAGE	KÄFIG KUGLEHOLDER	1270
48		613-10030		4	SCREW M10 x 30 TORNILLO	VITE PARAFUSO	VIS SCHROEF	SCHRAUBE SKRUE	7450
49		1286071C1		2	SHIM 0,08 mm SUPLEMENTO	SPESSORE CALCO DE AFINACAO	CALE D'EPAISSEUR DIKTEPLAAT	EINSTELLSCHEIBCHEN MELLEMLAEG	198S
49		1286072C1		2	SHIM 0,10 mm SUPLEMENTO	SPESSORE CALCO DE AFINACAO	CALE D'EPAISSEUR DIKTEPLAAT	EINSTELLSCHEIBCHEN MELLEMLAEG	198S
49		1286073C1		2	SHIM 0,13 mm SUPLEMENTO	SPESSORE CALCO DE AFINACAO	CALE D'EPAISSEUR DIKTEPLAAT	EINSTELLSCHEIBCHEN MELLEMLAEG	198S
49		1286074C1		2	SHIM 0,30 mm SUPLEMENTO	SPESSORE CALCO DE AFINACAO	CALE D'EPAISSEUR DIKTEPLAAT	EINSTELLSCHEIBCHEN MELLEMLAEG	198S
49		1286075C1		2	SHIM 0,76 mm SUPLEMENTO	SPESSORE CALCO DE AFINACAO	CALE D'EPAISSEUR DIKTEPLAAT	EINSTELLSCHEIBCHEN MELLEMLAEG	198S
50		1981207C1		1	TUBE TUBO	TUBETTO TUBO	TUBE BUISJE	SCHLAUCH RØR	195T
52		L33289		1	BEARING, CONE 2-1/4 inch ID CONO	CONO DEL CUSCINETTO CONE	CONE DE ROULEMENT KEGEL	LAGERKONUS LEJEKONUS	237C
53		105497H		1	BEARING, CUP PISTA DE RODAMIENTO	ANELLO CUSCINETTO ANILHA ROLAMENTO	CUVETTE ROULEMENT LAGER, CUP	LAGERSCHALE LEJERING	062A
55		256235A2		1	SUPPORT ASSY. Inc. 56 APOYADERO (CONJUNT	SUPPORTO, COMPLESS SUPORTE CONJUNTO	SUPPORT (ASSEMBLE) SUPPORT ASSY.	STUETZE (KPLT.) SUPPORT ASSY.	P427
56		37-188		9	PIN 1/2 x 1/2 in PERNO	PERNO PERNO	AXE PEN	BOLZEN STIFT	080P
57		613-12040		11	SCREW M12 x 40 TORNILLO	VITE PARAFUSO	VIS SCHROEF	SCHRAUBE SKRUE	7450
58		230042A1		1	GEAR 17T ENGRANAJE	INGRANAGGIO CARRETO	PIGNON TANDWIEL	ZAHNRAD TANDHJUL	050I
60		282724A1		1	SHAFT Inc. 61, 62 EJE	ALBERO VEIO	ARBRE AS	WELLE AKSEL	7590
61		38-3605		1	PIN 3/32 x 5/16 PERNO	PERNO PERNO	AXE PEN	BOLZEN STIFT	080P

SPEED TRANSMISSION - INPUT SHAFT WITH CREEP SPEED
CAMBIO VELOCITÀ - ALBERO D'ENTRATA CON MARCIA SUPER RIDOTTA
BOÎTE DE VITESSES - ARBRE D'ADMISSION AVEC VITESSES LENTES
WECHSELGETRIEBE - EINGANGSWELLE MIT LANGSAMGRUPPE

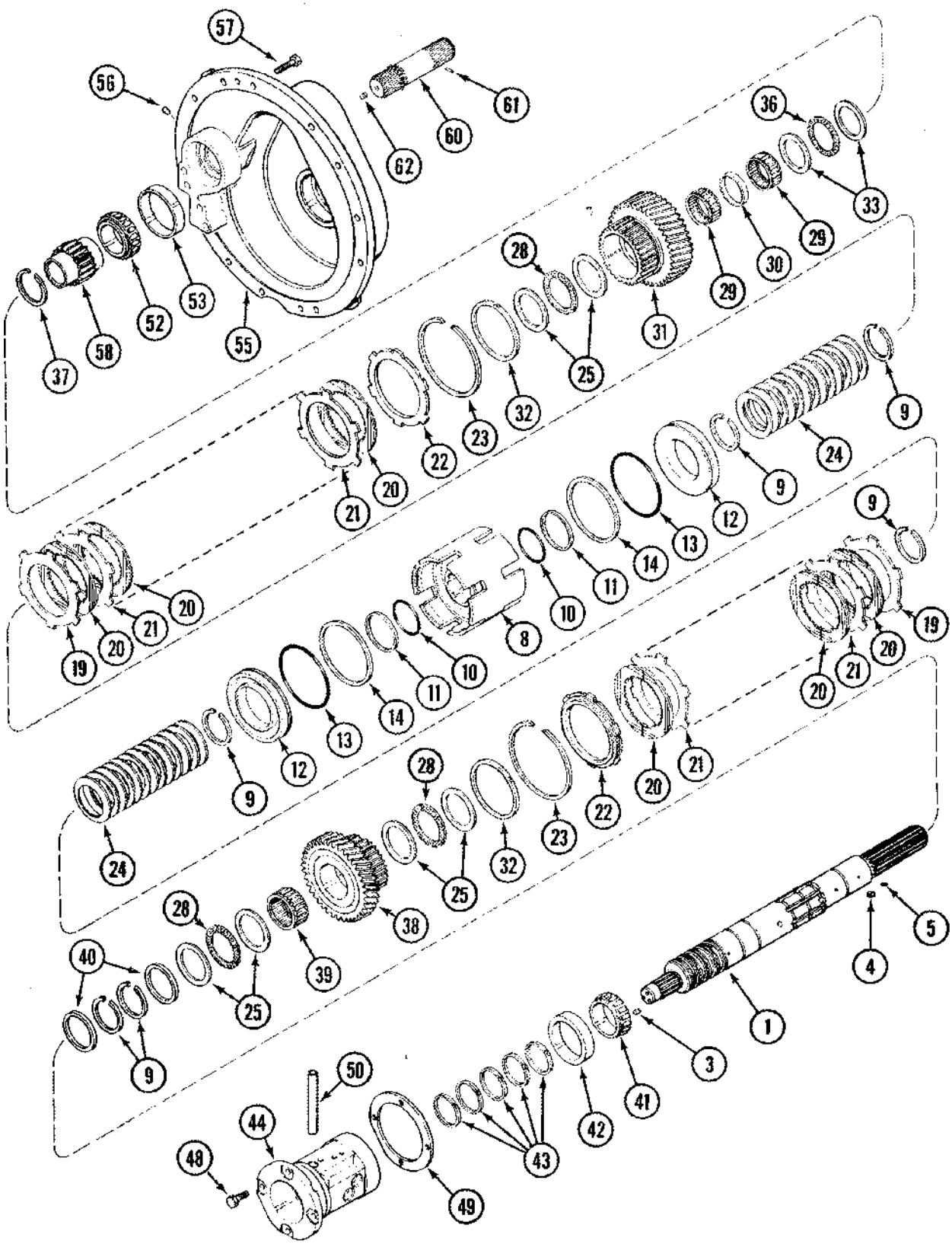

TRANSMISIÓN DE VELOCIDAD - EJE DE ENTRADA CON VELOCIDAD ULTRALENTA
TRANSMISSÃO DA VELOCIDADE - EIXO DE ENTRADA COM REDUÇÃO DE VELOCIDADE
VERSNELLINGSTRANSMISSIE - INVOERAS MET KRUIPVERSNELLING
HASTIGHEDSOVERFØRSEL - INDGANGSAKSEL MED KRYBEGEAR

R	N	P.N.	MOD	Q	Description Denominacion	Descrizione Denominação	Description Beschrijving	Bezeichnung Beskrivelse	L.C.
62		284151A1		1	SCREW M10 x 10 TORNILLO	VITE PARAFUSO	VIS SCHROEF	SCHRAUBE SKRUE	7450

SPEED TRANSMISSION - COUNTERSHAFT WITHOUT CREEP SPEED
CAMBIO VELOCITÀ - CONTRALBERO SENZA MARCIA SUPER RIDOTTA
BOÎTE DE VITESSES - ARBRE INTERMÉDIAIRE SANS VITESSES LENTES
WECHSELGETRIEBE - VORGELEGEWELLE OHNE LANGSAMGRUPPE

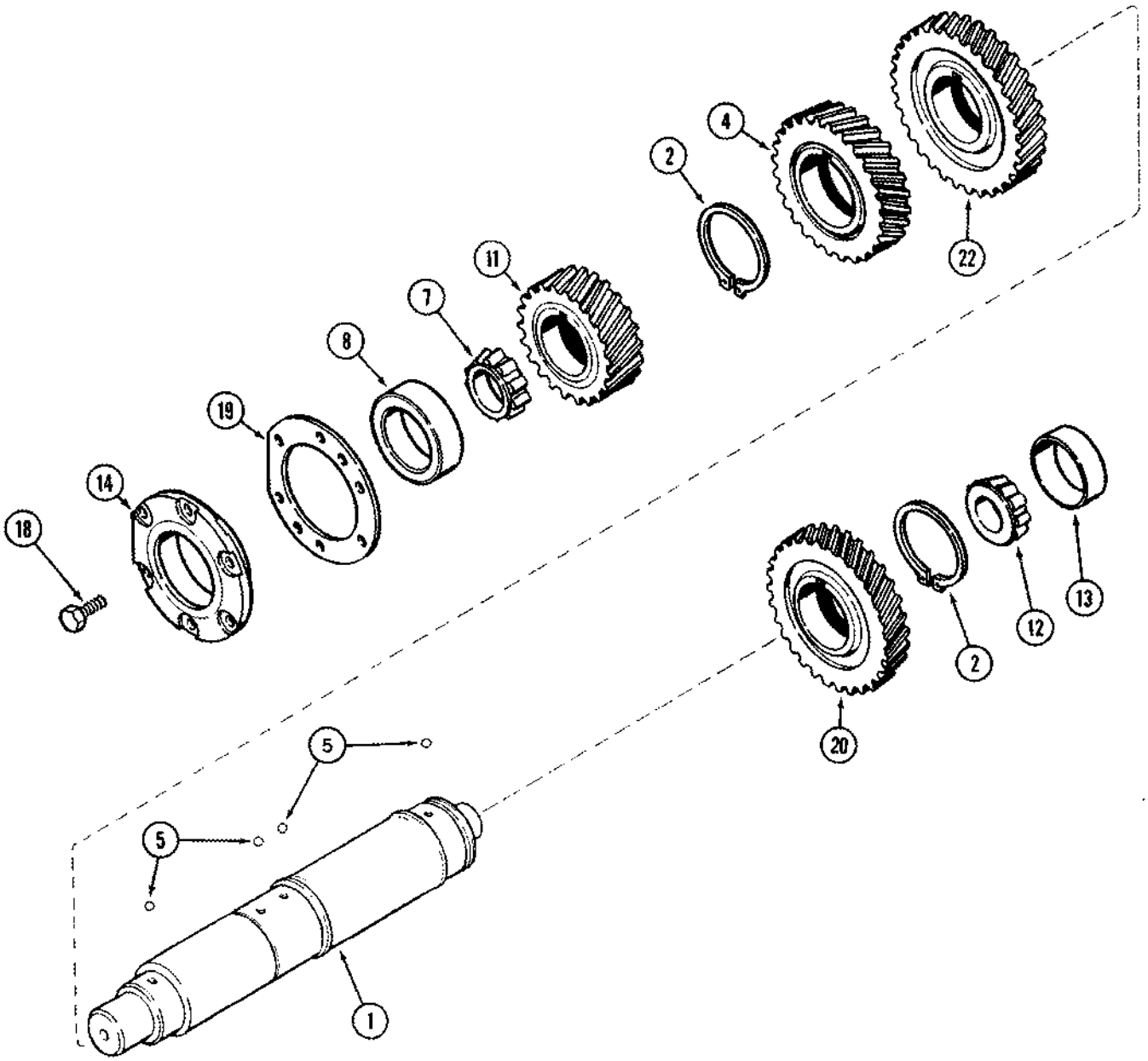

TRANSMISIÓN DE VELOCIDAD - EJE INTERMEDIO SIN VELOCIDAD ULTRALENTA
TRANSMISSÃO DA VELOCIDADE - CONTRA-EIXO SEM REDUÇÃO DE VELOCIDADE
VERSNELLINGSTRANSMISSIE - SECUNDAIRE AS ZONDER KRUIPVERSNELLING
HASTIGHEDSOVERFØRSEL - MELLEMAKSEL UDEN KRYBEGEAR

R	N	P.N.	MOD	Q	Description Denominacion	Descrizione Denominação	Description Beschrijving	Bezeichnung Beskrivelse	L.C.
1		1342253C2		1	SHAFT EJE	ALBERO VEIO	ARBRE AS	WELLE AKSEL	016A
2		100-11293		2	RING, SNAP No. 293 ANILLO DE RESORTE	ANELLO ELASTICO ANEL	ANNEAU D'ARRÊT RING, SNAP	SICHERUNGSRING LÅSERING	054A
4		1285983C1		1	PINION Drive, 34T PINON	PIGNONE PINHAO	PIGNON PINION	RITZEL PINION	P045
5		211-1012		4	BALL 3/8; 24,CRS BOLA	SFERA ESFERA	BILLE KOGEL	KUGEL KUGLE	0460
7		ST791		1	BEARING, CONE CONO	CONO DEL CUSCINETTO CONE	CONE DE ROULEMENT KEGEL	LAGERKONUS LEJEKONUS	237C
8		ST951		1	BEARING, CUP PISTA DE RODAMIENTO	ANELLO CUSCINETTO ANILHA ROLAMENTO	CUVETTE ROULEMENT LAGER, CUP	LAGERSCHALE LEJERING	062A
11		1285981C1		1	PINION Drive, 29 T PINON	PIGNONE PINHAO	PIGNON PINION	RITZEL PINION	P045
12		ST2051		1	BEARING, CONE CONO	CONO DEL CUSCINETTO CONE	CONE DE ROULEMENT KEGEL	LAGERKONUS LEJEKONUS	237C
13		ST863		1	BEARING, CUP PISTA DE RODAMIENTO	ANELLO CUSCINETTO ANILHA ROLAMENTO	CUVETTE ROULEMENT LAGER, CUP	LAGERSCHALE LEJERING	062A
14		1286000C3		1	CAGE JAULA	GABBIA GAIOLA	CAGE CAGE	KÄFIG KUGLEHOLDER	1270
18		613-10025		6	SCREW M10 x 25; 8.8 TORNILLO	VITE PARAFUSO	VIS SCHROEF	SCHRAUBE SKRUE	7450
19		120647C2		AR	SHIM 0,08 mm SUPLEMENTO	SPESSORE CALCO DE AFINACAO	CALE D'EPAISSEUR DIKTEPLAAT	EINSTELLSCHEIBCHEN MELLEMLAEG	198S
19		120648C2		AR	SHIM 0,10 mm SUPLEMENTO	SPESSORE CALCO DE AFINACAO	CALE D'EPAISSEUR DIKTEPLAAT	EINSTELLSCHEIBCHEN MELLEMLAEG	198S
19		120649C2		AR	SHIM 0,13 mm SUPLEMENTO	SPESSORE CALCO DE AFINACAO	CALE D'EPAISSEUR DIKTEPLAAT	EINSTELLSCHEIBCHEN MELLEMLAEG	198S
19		120650C2		AR	SHIM 0,30 mm SUPLEMENTO	SPESSORE CALCO DE AFINACAO	CALE D'EPAISSEUR DIKTEPLAAT	EINSTELLSCHEIBCHEN MELLEMLAEG	198S
19		120651C2		AR	SHIM 0,76 mm SUPLEMENTO	SPESSORE CALCO DE AFINACAO	CALE D'EPAISSEUR DIKTEPLAAT	EINSTELLSCHEIBCHEN MELLEMLAEG	198S
20		1285989C1		1	PINION Driven, 37T PINON	PIGNONE PINHAO	PIGNON PINION	RITZEL PINION	P045
22		1285986C1		1	PINION Driven, 39T PINON	PIGNONE PINHAO	PIGNON PINION	RITZEL PINION	P045

SPEED TRANSMISSION - COUNTERSHAFT WITH CREEP SPEED
CAMBIO VELOCITÀ - CONTRALBERO CON MARCIA SUPER RIDOTTA
BOÎTE DE VITESSES - ARBRE INTERMÉDIAIRE AVEC VITESSES LENTES
WECHSELGETRIEBE - VORGELEGEWELLE MIT LANGSAMGRUPPE

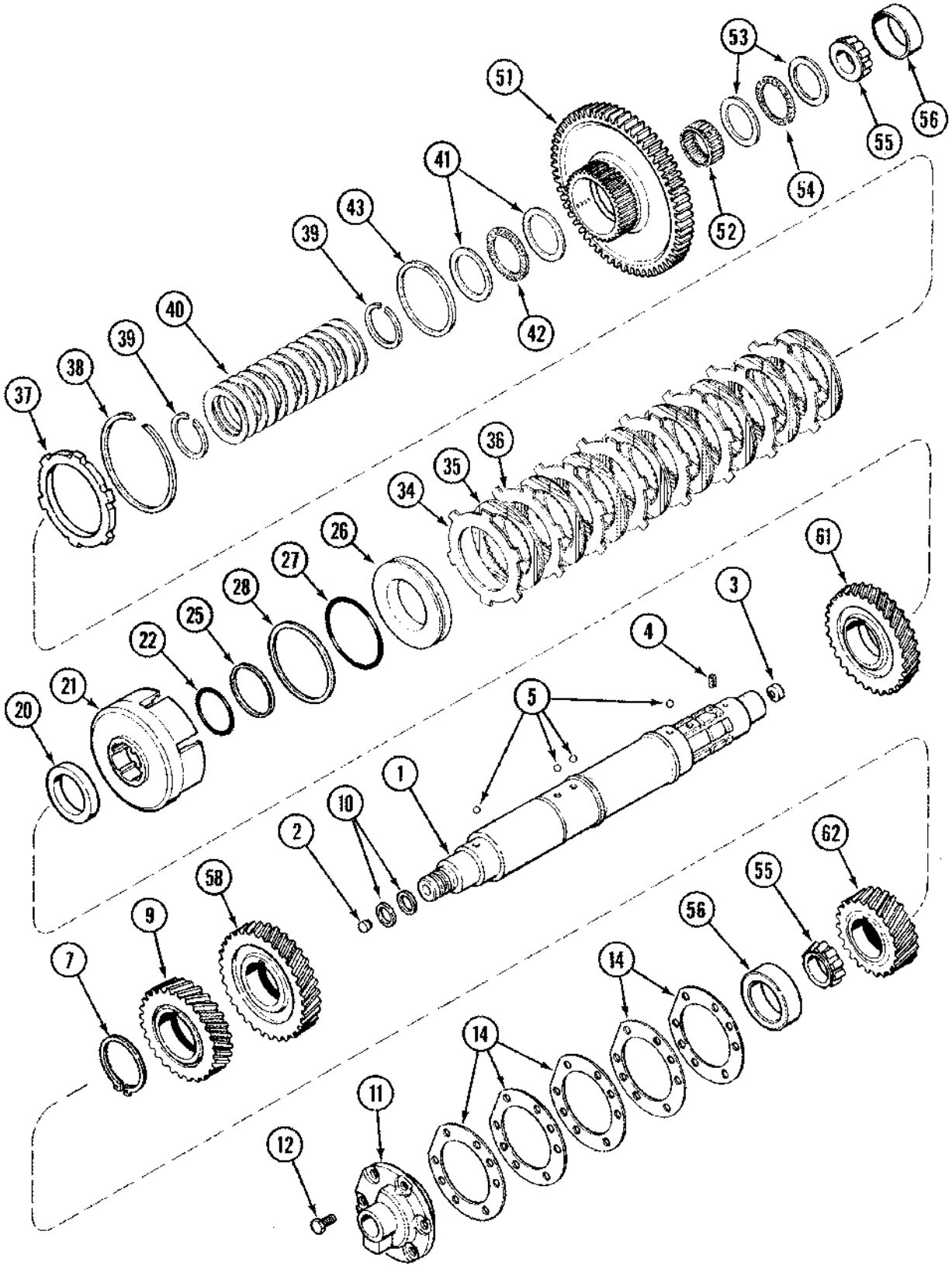

TRANSMISIÓN DE VELOCIDAD - EJE INTERMEDIO CON VELOCIDAD ULTRALENTA
TRANSMISSÃO DA VELOCIDADE - CONTRA-EIXO COM REDUÇÃO DE VELOCIDADE
VERSNELLINGSTRANSMISSIE - SECUNDAIRE AS MET KRUIPVERSNELLING
HASTIGHEDSOVERFØRSEL - MELLEMAKSEL MED KRYBEGEAR

R	N	P.N.	MOD	Q	Description Denominacion	Descrizione Denominação	Description Beschrijving	Bezeichnung Beskrivelse	L.C.
1		1342318C2		1	SHAFT Inc. 2 - 4 EJE	ALBERO VEIO	ARBRE AS	WELLE AKSEL	016A
2		1286084C1		1	PIN 12 mm PERNO	PERNO PERNO	AXE PEN	BOLZEN STIFT	080P
3		92825C1		1	PLUG TAPÓN	TAPPO BUJÃO	BOUCHON PLUG	STOPFEN PROP	050T
4		1963875C1		1	PIN, SPLIT (COTTER) PASADOR ABIERTO	COPPIGLIA TROCO DE ABRIR	GOUPILLE SPLITPEN	SPLINT SPLITBOLT	270C
5		211-1012		4	BALL 3/8; 24,CRS BOLA	SFERA ESFERA	BILLE KOGEL	KUGEL KUGLE	0460
7		100-11293		1	RING, SNAP No. 293 ANILLO DE RESORTE	ANELLO ELASTICO ANEL	ANNEAU D'ARRÊT RING, SNAP	SICHERUNGSRING LÅSERING	054A
9		1285983C1		1	PINION Drive, 34T PINON	PIGNONE PINHAO	PIGNON PINION	RITZEL PINION	P045
10		144242C3		2	RING 33 mm ANILLO	ANELLO ANEL	ANNEAU RING	RING RING	045A
11		92828C1		1	CAGE JAULA	GABBIA GAIOLA	CAGE CAGE	KÄFIG KUGLEHOLDER	1270
12		613-10025		6	SCREW M10 x 25; 8.8 TORNILLO	VITE PARAFUSO	VIS SCHROEF	SCHRAUBE SKRUE	7450
14		120647C2		AR	SHIM 0,08 mm SUPLEMENTO	SPESSORE CALCO DE AFINACAO	CALE D'EPAISSEUR DIKTEPLAAT	EINSTELLSCHEIBCHEN MELLEMLAEG	198S
14		120648C2		AR	SHIM 0,10 mm SUPLEMENTO	SPESSORE CALCO DE AFINACAO	CALE D'EPAISSEUR DIKTEPLAAT	EINSTELLSCHEIBCHEN MELLEMLAEG	198S
14		120649C2		AR	SHIM 0.13 mm SUPLEMENTO	SPESSORE CALCO DE AFINACAO	CALE D'EPAISSEUR DIKTEPLAAT	EINSTELLSCHEIBCHEN MELLEMLAEG	198S
14		120650C2		AR	SHIM 0,30 mm SUPLEMENTO	SPESSORE CALCO DE AFINACAO	CALE D'EPAISSEUR DIKTEPLAAT	EINSTELLSCHEIBCHEN MELLEMLAEG	198S
14		120651C2		AR	SHIM 0,76 mm SUPLEMENTO	SPESSORE CALCO DE AFINACAO	CALE D'EPAISSEUR DIKTEPLAAT	EINSTELLSCHEIBCHEN MELLEMLAEG	198S
20		92824C1		1	SPACER SEPARADOR	DISTANZIALE ESPACADOR	ENTRETOISE AFSTANDSRING	DISTANZSTÜCK AFSTANDSSTYKKE	075D
21		86991568		1	CARRIER EJE DE SATELITES	PORTASATELLITI PORTA-SATELITES	PILIER, SOUTIEN SATELIETDRAGER	PLANETENTRÄGER SPIDSHJULSHOLDER	196P
22		1286081C1		1	O-RING JUNTA HERMETICA	ANELLO TOROIDALE O-RING	JOINT THORIQUE O-RING	DICHTRING O-RING	055A
25		1286076C1		1	RING ANILLO	ANELLO ANEL	ANNEAU RING	RING RING	045A
26		242492A5		1	PISTON EMBOLO	STANTUFFO PISTAO	PISTON ZUIGER	KOLBEN STEMPEL	235S
27		1286083C1		1	O-RING JUNTA HERMETICA	ANELLO TOROIDALE O-RING	JOINT THORIQUE O-RING	DICHTRING O-RING	055A
28		1286079C1		1	RING ANILLO	ANELLO ANEL	ANNEAU RING	RING RING	045A
34		128114A1		1	DISC Separator DISCO	DISCO DISCO	DISQUE SCHIJF	SCHEIBE NAV	060D
35		86990276		8	DISC Friction DISCO	DISCO DISCO	DISQUE SCHIJF	SCHEIBE NAV	060D

SPEED TRANSMISSION - COUNTERSHAFT WITH CREEP SPEED
CAMBIO VELOCITÀ - CONTRALBERO CON MARCIA SUPER RIDOTTA
BOÎTE DE VITESSES - ARBRE INTERMÉDIAIRE AVEC VITESSES LENTES
WECHSELGETRIEBE - VORGELEGEWELLE MIT LANGSAMGRUPPE

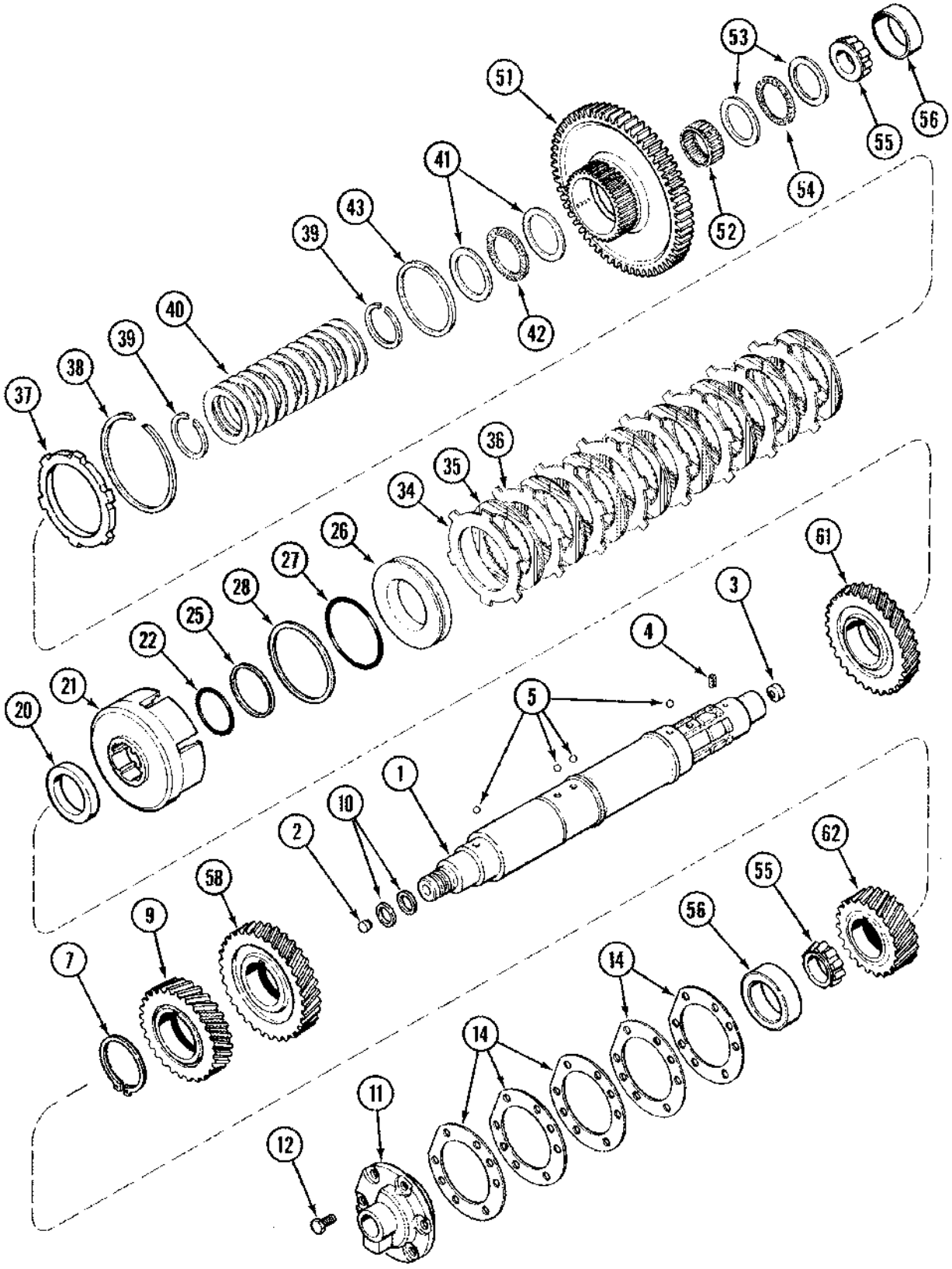

TRANSMISIÓN DE VELOCIDAD - EJE INTERMEDIO CON VELOCIDAD ULTRALENTA
TRANSMISSÃO DA VELOCIDADE - CONTRA-EIXO COM REDUÇÃO DE VELOCIDADE
VERSNELLINGSTRANSMISSIE - SECUNDAIRE AS MET KRUIPVERSNELLING
HASTIGHEDSOVERFØRSEL - MELLEMAKSEL MED KRYBEGEAR

R	N	P.N.	MOD	Q	Description Denominacion	Descrizione Denominação	Description Beschrijving	Bezeichnung Beskrivelse	L.C.
36		92934C2		7	DISC Separator DISCO	DISCO DISCO	DISQUE SCHIJF	SCHEIBE NAV	060D
37		1342645C3		1	DISC, CLUTCH DISCO (CONJUNTO)	DISCO, FRIZIONE DISCO CONJUNTO	DISQUE-D'EMBRAYAGE DISC, CLUTCH	KUPPLUNGSCHEIBE DISC, CLUTCH	P485
38		1285996C1		1	RING, SNAP ANILLO DE RESORTE	ANELLO ELASTICO ANEL	ANNEAU D'ARRÊT RING, SNAP	SICHERUNGSRING LÅSERING	054A
39		93350C1		2	RING ANILLO	ANELLO ANEL	ANNEAU RING	RING RING	045A
40		1286012C2		13	WASHER ARANDELA	ROSETTA PIANA ANILHA	RONDELLE SLUITRING	BEILAGSCHEIBE FLADSKIVE	131R
41		1286043C1		2	WASHER, THRUST ARANDELA DE TOPE	RONDELLA, DI SPINTA ANILHA DE ENCOSTO	RONDELLE DE BUTÉE SLUITRING DRUKPLAAT	DRUCKSCHEIBE TRYKSKIVE	023R
42		572182R1		1	BEARING, THRUST COJINETE DE EMBRAGU	CUSCINETTO, REGGISP ROL. ENCOSTO	BUTÉE A BILLES LAGER, DRUKKOPPELIN	DRUKLAGER KUGLELEJE	342C
43		1286052C1		1	RING ANILLO	ANELLO ANEL	ANNEAU RING	RING RING	045A
51		92795C1		1	PINION PINON	PIGNONE PINHAO	PIGNON PINION	RITZEL PINION	P045
52		80906C1		1	BEARING, NEEDLE RODAMIENTO DE RPDIL	CUSCINETTO A RULLINI ROLAMENTO	ROULEMENT A AIGUILLE LAGER, NAALD	NADELLAGER NAALELEJE	344C
53		1286042C1		2	WASHER, THRUST ARANDELA DE TOPE	RONDELLA, DI SPINTA ANILHA DE ENCOSTO	RONDELLE DE BUTÉE SLUITRING DRUKPLAAT	DRUCKSCHEIBE TRYKSKIVE	023R
54		K620185		1	BEARING, THRUST COJINETE DE EMBRAGU	CUSCINETTO, REGGISP ROL. ENCOSTO	BUTÉE A BILLES LAGER, DRUKKOPPELIN	DRUKLAGER KUGLELEJE	342C
55		ST2051		2	BEARING, CONE CONO	CONO DEL CUSCINETTO CONE	CONE DE ROULEMENT KEGEL	LAGERKONUS LEJEKONUS	237C
56		ST863		2	BEARING, CUP PISTA DE RODAMIENTO	ANELLO CUSCINETTO ANILHA ROLAMENTO	CUVETTE ROULEMENT LAGER, CUP	LAGERSCHALE LEJERING	062A
58		1285986C1		1	PINION Driven, 39T PINON	PIGNONE PINHAO	PIGNON PINION	RITZEL PINION	P045
61		1285989C1		1	PINION Driven, 37T PINON	PIGNONE PINHAO	PIGNON PINION	RITZEL PINION	P045
62		1285981C1		1	PINION Drive, 29T PINON	PIGNONE PINHAO	PIGNON PINION	RITZEL PINION	P045

SPEED TRANSMISSION - OUTPUT SHAFT FRONT CLUTCH
CAMBIO VELOCITÀ - FRIZIONE ANTERIORE DELL'ALBERO D'USCITA
BOÎTE DE VITESSES - ARBRE DE SORTIE, EMBRAYAGE AVANT
WECHSELGETRIEBE - VORDERE KUPPLUNG DER AUSGANGSWELLE

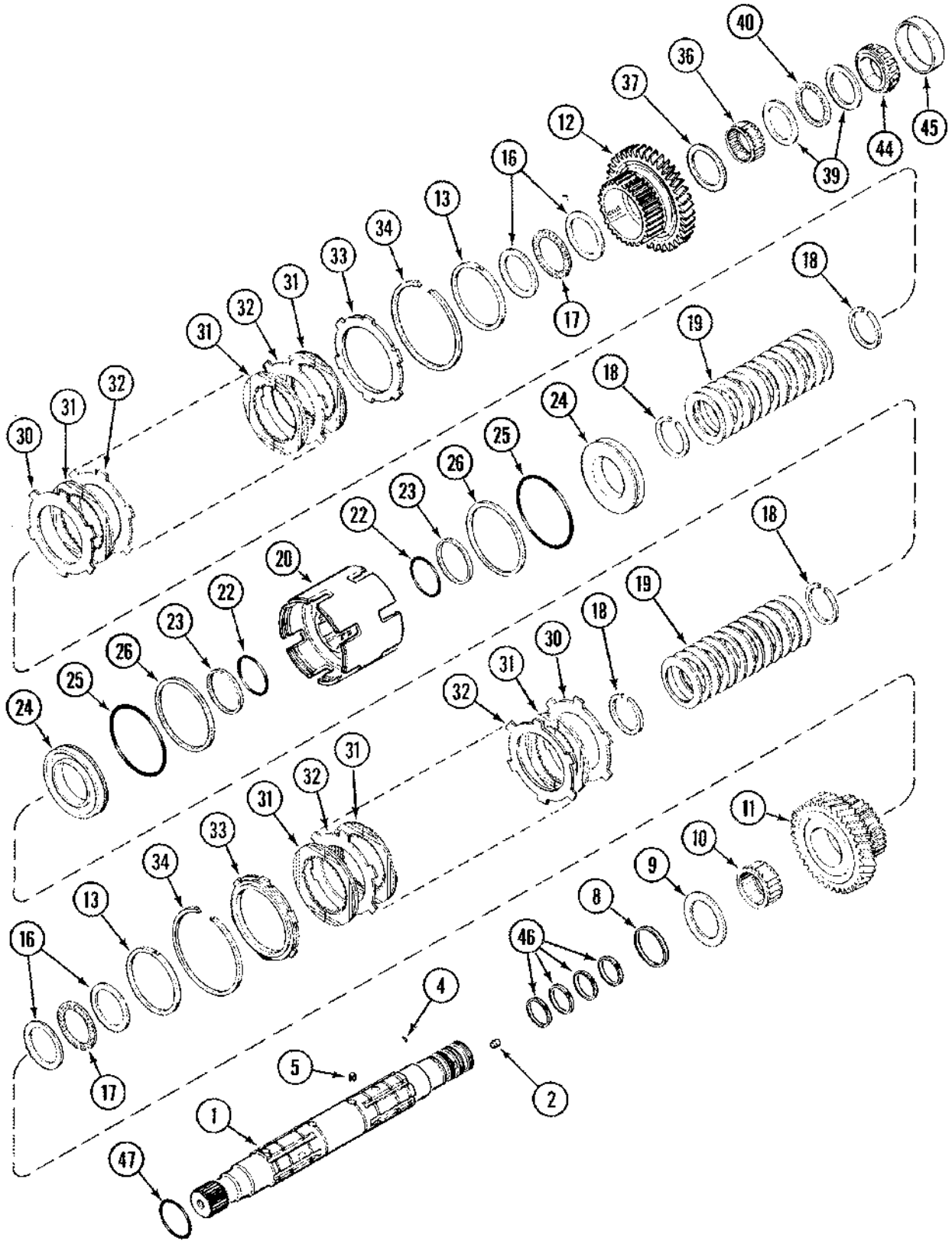

TRANSMISIÓN DE VELOCIDAD - EMBRAGUE DELANTERO DEL EJE DE SALIDA
TRANSMISSÃO DA VELOCIDADE - EMBRAIAGEM DIANTEIRA DO EIXO DE SAÍDA
VERSNELLINGSTRANSMISSIE - KOPPELING UITVOERAS VOOR
HASTIGHEDSOVERFØRSEL - UDGANGSAKSLENS FORRESTE KOBLING

R	N	P.N.	MOD	Q	Description Denominacion	Descrizione Denominação	Description Beschrijving	Bezeichnung Beskrivelse	L.C.
1		230135A2		1	SHAFT Inc. 2, 4, 5 EJE	ALBERO VEIO	ARBRE AS	WELLE AKSEL	016A
2		187516A1		3	PLUG 12 mm TAPÓN	TAPPO BUJÃO	BOUCHON PLUG	STOPFEN PROP	050T
4		38-3605		6	PIN 3/32 x 5/16 PERNO	PERNO PERNO	AXE PEN	BOLZEN STIFT	080P
5		1963875C1		4	PIN, SPLIT (COTTER) PASADOR ABIERTO	COPPIGLIA TROCO DE ABRIR	GOUPILLE SPLITPEN	SPLINT SPLITBOLT	270C
8		1286040C2		1	RING ANILLO	ANELLO ANEL	ANNEAU RING	RING RING	045A
9		1997888C1		1	WASHER, THRUST ARANDELA DE TOPE	RONDELLA, DI SPINTA ANILHA DE ENCOSTO	RONDELLE DE BUTÉE SLUITRING DRUKPLAAT	DRUCKSCHEIBE TRYKSKIVE	023R
10		1286016C1		1	BEARING, NEEDLE RODAMIENTO DE RPDIL	CUSCINETTO A RULLINI ROLAMENTO	ROULEMENT A AIGUILLE LAGER, NAALD	NADELLAGER NAALELEJE	344C
11		1285985C1		1	GEAR, WHEEL 34T RUEDA DENTADA	RUOTA DENTATA RODA DENTADA	ROUE-DENTEE GEAR-WHEEL	ZAHNRAD GEAR-WHEEL	Z624
12		1285987C1		1	PINION 39T PINON	PIGNONE PINHAO	PIGNON PINION	RITZEL PINION	P045
13		1286052C1		2	RING ANILLO	ANELLO ANEL	ANNEAU RING	RING RING	045A
16		1286043C1		4	WASHER, THRUST ARANDELA DE TOPE	RONDELLA, DI SPINTA ANILHA DE ENCOSTO	RONDELLE DE BUTÉE SLUITRING DRUKPLAAT	DRUCKSCHEIBE TRYKSKIVE	023R
17		572182R1		2	BEARING, THRUST COJINETE DE EMBRAGU	CUSCINETTO, REGGISP ROL. ENCOSTO	BUTÉE A BILLES LAGER, DRUKKOPPELIN	DRUKLAGER KUGLELEJE	342C
18		93350C1		4	RING ANILLO	ANELLO ANEL	ANNEAU RING	RING RING	045A
19		1286012C2		24	WASHER ARANDELA	ROSETTA PIANA ANILHA	RONDELLE SLUITRING	BEILAGSCHEIBE FLADSKIVE	131R
20		86987594		1	CARRIER EJE DE SATELITES	PORTASATELLITI PORTA-SATELITES	PILIER, SOUTIEN SATELIETDRAGER	PLANETENTRÄGER SPIDSHJULSHOLDER	196P
22		1286081C1		2	O-RING JUNTA HERMETICA	ANELLO TOROIDALE O-RING	JOINT THORIQUE O-RING	DICHTRING O-RING	055A
23		1286076C1		2	RING ANILLO	ANELLO ANEL	ANNEAU RING	RING RING	045A
24		242492A5		2	PISTON EMBOLO	STANTUFFO PISTAO	PISTON ZUIGER	KOLBEN STEMPEL	235S
25		1286083C1		2	O-RING JUNTA HERMETICA	ANELLO TOROIDALE O-RING	JOINT THORIQUE O-RING	DICHTRING O-RING	055A
26		1286079C1		2	RING ANILLO	ANELLO ANEL	ANNEAU RING	RING RING	045A
30		128114A1		2	DISC Separator DISCO	DISCO DISCO	DISQUE SCHIJF	SCHEIBE NAV	060D
31		86990276		14	DISC Friction DISCO	DISCO DISCO	DISQUE SCHIJF	SCHEIBE NAV	060D
32		92934C2		12	DISC Separator DISCO	DISCO DISCO	DISQUE SCHIJF	SCHEIBE NAV	060D
33		1342645C3		2	DISC, CLUTCH DISCO (CONJUNTO)	DISCO, FRIZIONE DISCO CONJUNTO	DISQUE-D'EMBRAYAGE DISC, CLUTCH	KUPPLUNGSCHEIBE DISC, CLUTCH	P485

SPEED TRANSMISSION - OUTPUT SHAFT FRONT CLUTCH
CAMBIO VELOCITÀ - FRIZIONE ANTERIORE DELL'ALBERO D'USCITA
BOÎTE DE VITESSES - ARBRE DE SORTIE, EMBRAYAGE AVANT
WECHSELGETRIEBE - VORDERE KUPPLUNG DER AUSGANGSWELLE

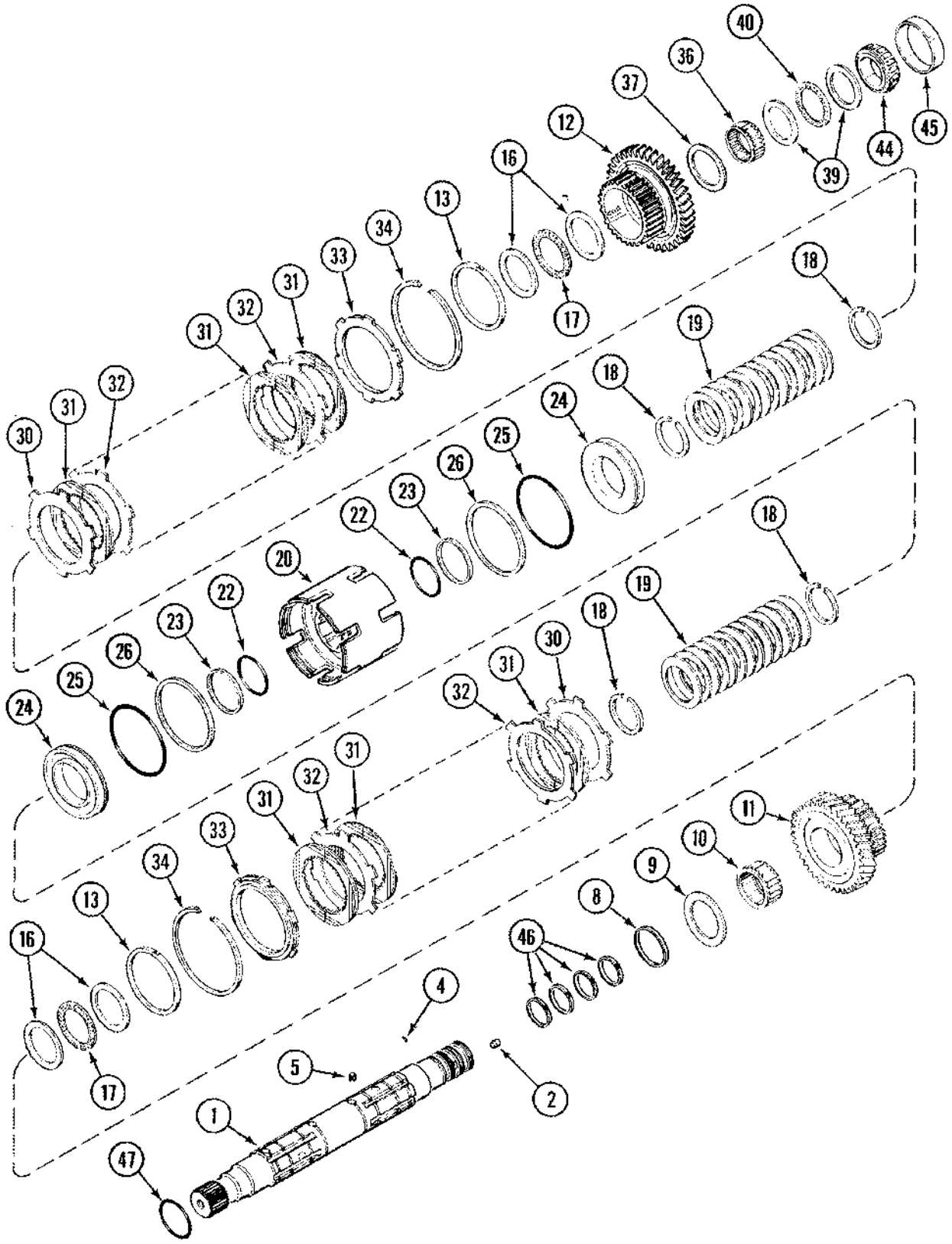

TRANSMISIÓN DE VELOCIDAD - EMBRAGUE DELANTERO DEL EJE DE SALIDA
TRANSMISSÃO DA VELOCIDADE - EMBRAIAGEM DIANTEIRA DO EIXO DE SAÍDA
VERSNELLINGSTRANSMISSIE - KOPPELING UITVOERAS VOOR
HASTIGHEDSOVERFØRSEL - UDGANGSAKSLENS FORRESTE KOBLING

R	N	P.N.	MOD	Q	Description Denominacion	Descrizione Denominação	Description Beschrijving	Bezeichnung Beskrivelse	L.C.
34		1285996C1		2	RING, SNAP ANILLO DE RESORTE	ANELLO ELASTICO ANEL	ANNEAU D'ARRÊT RING, SNAP	SICHERUNGSRING LÅSERING	054A
36		80907C1		1	BEARING, NEEDLE RODAMIENTO DE RPDIL	CUSCINETTO A RULLINI ROLAMENTO	ROULEMENT A AIGUILLE LAGER, NAALD	NADELLAGER NAALELEJE	344C
37		1342513C1		1	SPACER SEPARADOR	DISTANZIALE ESPACADOR	ENTRETOISE AFSTANDSRING	DISTANZSTÜCK AFSTANDSSTYKKE	075D
39		1286042C1		2	WASHER, THRUST ARANDELA DE TOPE	RONDELLA, DI SPINTA ANILHA DE ENCOSTO	RONDELLE DE BUTÉE SLUITRING DRUKPLAAT	DRUCKSCHEIBE TRYKSKIVE	023R
40		K620185		1	BEARING, THRUST COJINETE DE EMBRAGU	CUSCINETTO, REGGISP ROL. ENCOSTO	BUTÉE A BILLES LAGER, DRUKKOPPELIN	DRUKLAGER KUGLELEJE	342C
44		219530H1		1	BEARING, CONE CONO	CONO DEL CUSCINETTO CONE	CONE DE ROULEMENT KEGEL	LAGERKONUS LEJEKONUS	237C
45		ST964		1	BEARING, CUP PISTA DE RODAMIENTO	ANELLO CUSCINETTO ANILHA ROLAMENTO	CUVETTE ROULEMENT LAGER, CUP	LAGERSCHALE LEJERING	062A
46		1286024C1		4	RING ANILLO	ANELLO ANEL	ANNEAU RING	RING RING	045A
47		238-5223		1	O-RING 1-5/8 ID x 1/8 JUNTA HERMETICA	ANELLO TOROIDALE ANEL O	JOINT TORIQUE O-RING	O-RING O-RING	7176

SPEED TRANSMISSION - OUTPUT SHAFT REAR CLUTCH
CAMBIO VELOCITÀ - FRIZIONE POSTERIORE DELL'ALBERO D'USCITA
BOÎTE DE VITESSES - ARBRE DE SORTIE, EMBRAYAGE ARRIÈRE
WECHSELGETRIEBE - HINTERE KUPPLUNG DER AUSGANGSWELLE

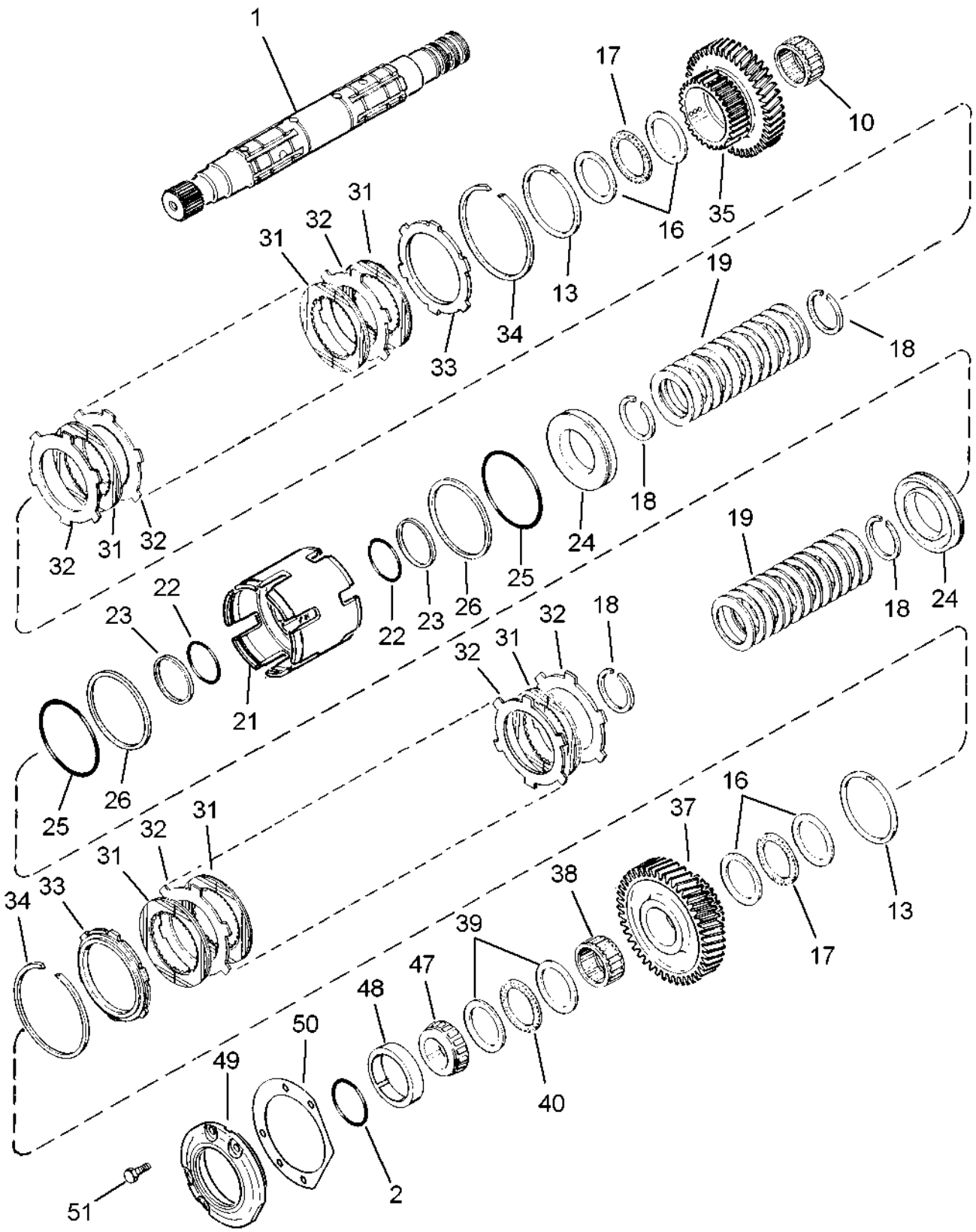

TRANSMISIÓN DE VELOCIDAD - EMBRAGUE TRASERO DEL EJE DE SALIDA
TRANSMISSÃO DA VELOCIDADE - EMBRAIAGEM TRASEIRA DO EIXO DE SAÍDA
VERSNELLINGSTRANSMISSIE - KOPPELING UITVOERAS ACHTER
HASTIGHEDSOVERFØRSEL - UDGANGSAKSLENS BAGESTE KOBLING

R	N	P.N.	MOD	Q	Description Denominacion	Descrizione Denominação	Description Beschrijving	Bezeichnung Beskrivelse	L.C.
1	1	230135A2		1	SHAFT EJE	ALBERO VEIO	ARBRE AS	WELLE AKSEL	016A
2		238-5223		1	O-RING 1-5/8 ID x 1/8 JUNTA HERMETICA	ANELLO TOROIDALE ANEL O	JOINT TORIQUE O-RING	O-RING O-RING	7176
10		1286016C1		1	BEARING, NEEDLE RODAMIENTO DE RPDIL	CUSCINETTO A RULLINI ROLAMENTO	ROULEMENT A AIGUILLE LAGER, NAALD	NADELLAGER NAALELEJE	344C
13		1286052C1		2	RING ANILLO	ANELLO ANEL	ANNEAU RING	RING RING	045A
16		1286043C1		4	WASHER, THRUST ARANDELA DE TOPE	RONDELLA, DI SPINTA ANILHA DE ENCOSTO	RONDELLE DE BUTÉE SLUITRING DRUKPLAAT	DRUCKSCHEIBE TRYKSKIVE	023R
17		572182R1		2	BEARING, THRUST COJINETE DE EMBRAGU	CUSCINETTO, REGGISP ROL. ENCOSTO	BUTÉE A BILLES LAGER, DRUKKOPPELIN	DRUKLAGER KUGLELEJE	342C
18		93350C1		4	RING ANILLO	ANELLO ANEL	ANNEAU RING	RING RING	045A
19		1286012C2		26	WASHER ARANDELA	ROSETTA PIANA ANILHA	RONDELLE SLUITRING	BEILAGSCHEIBE FLADSKIVE	131R
21		86987593		1	CARRIER EJE DE SATELITES	PORTASATELLITI PORTA-SATELITES	PILIER, SOUTIEN SATELIETDRAGER	PLANETENTRÄGER SPIDSHJULSHOLDER	196P
22		1286081C1		2	O-RING JUNTA HERMETICA	ANELLO TOROIDALE O-RING	JOINT THORIQUE O-RING	DICHTRING O-RING	055A
23		1286076C1		2	RING ANILLO	ANELLO ANEL	ANNEAU RING	RING RING	045A
24		86987597		2	PISTON EMBOLO	STANTUFFO PISTAO	PISTON ZUIGER	KOLBEN STEMPEL	235S
25		1286083C1		2	O-RING JUNTA HERMETICA	ANELLO TOROIDALE O-RING	JOINT THORIQUE O-RING	DICHTRING O-RING	055A
26		1286079C1		2	RING ANILLO	ANELLO ANEL	ANNEAU RING	RING RING	045A
30		128114A1		2	DISC Separator DISCO	DISCO DISCO	DISQUE SCHIJF	SCHEIBE NAV	060D
31		86990276		20	DISC Friction DISCO	DISCO DISCO	DISQUE SCHIJF	SCHEIBE NAV	060D
32		92934C2		20	DISC Separator DISCO	DISCO DISCO	DISQUE SCHIJF	SCHEIBE NAV	060D
33		1342645C3		2	DISC, CLUTCH DISCO (CONJUNTO)	DISCO, FRIZIONE DISCO CONJUNTO	DISQUE-D'EMBRAYAGE DISC, CLUTCH	KUPPLUNGSCHEIBE DISC, CLUTCH	P485
34		1285996C1		2	RING, SNAP ANILLO DE RESORTE	ANELLO ELASTICO ANEL	ANNEAU D'ARRÊT RING, SNAP	SICHERUNGSRING LÅSERING	054A
35		86987609		1	PINION 39T PINON	PIGNONE PINHAO	PIGNON PINION	RITZEL PINION	P045
37		1285982C1		1	PINION 44T PINON	PIGNONE PINHAO	PIGNON PINION	RITZEL PINION	P045
38		1285997C1		1	BEARING, NEEDLE RODAMIENTO DE RPDIL	CUSCINETTO A RULLINI ROLAMENTO	ROULEMENT A AIGUILLE LAGER, NAALD	NADELLAGER NAALELEJE	344C
39		1286042C1		2	WASHER, THRUST ARANDELA DE TOPE	RONDELLA, DI SPINTA ANILHA DE ENCOSTO	RONDELLE DE BUTÉE SLUITRING DRUKPLAAT	DRUCKSCHEIBE TRYKSKIVE	023R
40		K620185		1	BEARING, THRUST COJINETE DE EMBRAGU	CUSCINETTO, REGGISP ROL. ENCOSTO	BUTÉE A BILLES LAGER, DRUKKOPPELIN	DRUKLAGER KUGLELEJE	342C

(1) See Figure 06-12

SPEED TRANSMISSION - OUTPUT SHAFT REAR CLUTCH
CAMBIO VELOCITÀ - FRIZIONE POSTERIORE DELL'ALBERO D'USCITA
BOÎTE DE VITESSES - ARBRE DE SORTIE, EMBRAYAGE ARRIÈRE
WECHSELGETRIEBE - HINTERE KUPPLUNG DER AUSGANGSWELLE

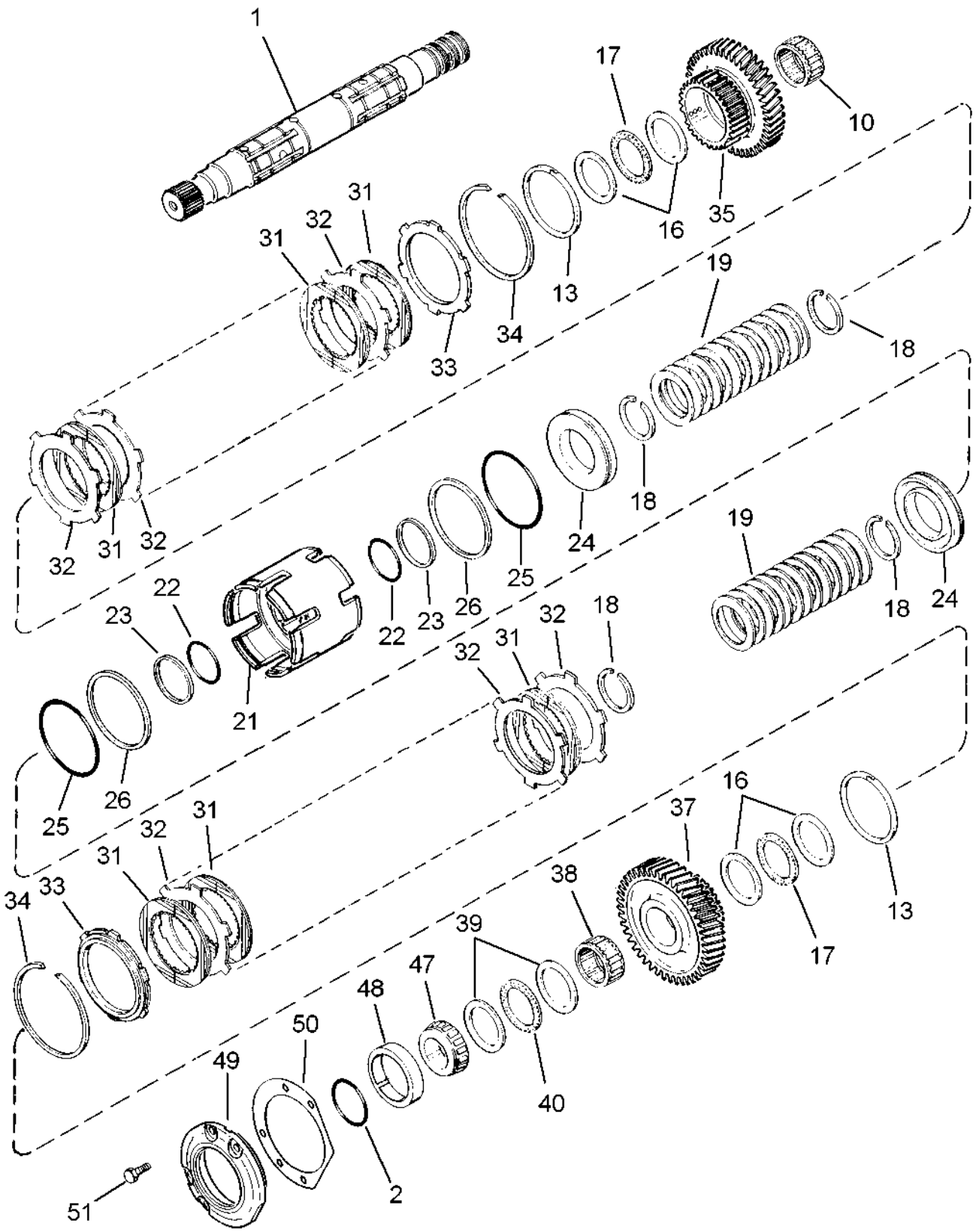

TRANSMISIÓN DE VELOCIDAD - EMBRAGUE TRASERO DEL EJE DE SALIDA
TRANSMISSÃO DA VELOCIDADE - EMBRAIAGEM TRASEIRA DO EIXO DE SAÍDA
VERSNELLINGSTRANSMISSIE - KOPPELING UITVOERAS ACHTER
HASTIGHEDSOVERFØRSEL - UDGANGSAKSLENS BAGESTE KOBLING

R	N	P.N.	MOD	Q	Description Denominacion	Descrizione Denominação	Description Beschrijving	Bezeichnung Beskrivelse	L.C.
47		1286021C1		1	BEARING, ROLLER RODAMIENTO DE RODIL	CUSCINETTO A RULLI ROLAMENTO ROLETES	ROULEMENT A ROULEA STEL RINGEN +0.8	ROLLEN LAGER RULLELEJE	346C
48		29214H		1	BEARING, CUP 4-5/16 OD PISTA DE RODAMIENTO	ANELLO CUSCINETTO ANILHA ROLAMENTO	CUVETTE ROULEMENT LAGER, CUP	LAGERSCHALE LEJERING	062A
49		1286001C4		1	CAGE JAULA	GABBIA GAIOLA	CAGE CAGE	KÄFIG KUGLEHOLDER	1270
50		1286061C1		2	SHIM 0,08 mm SUPLEMENTO	SPESSORE CALCO DE AFINACAO	CALE D'EPAISSEUR DIKTEPLAAT	EINSTELLSCHEIBCHEN MELLEMLAEG	198S
50		1286062C1		2	SHIM 0,10 mm SUPLEMENTO	SPESSORE CALCO DE AFINACAO	CALE D'EPAISSEUR DIKTEPLAAT	EINSTELLSCHEIBCHEN MELLEMLAEG	198S
50		1286063C1		2	SHIM 0,13 mm SUPLEMENTO	SPESSORE CALCO DE AFINACAO	CALE D'EPAISSEUR DIKTEPLAAT	EINSTELLSCHEIBCHEN MELLEMLAEG	198S
50		1286064C1		2	SHIM 0,30 mm SUPLEMENTO	SPESSORE CALCO DE AFINACAO	CALE D'EPAISSEUR DIKTEPLAAT	EINSTELLSCHEIBCHEN MELLEMLAEG	198S
50		1286065C1		2	SHIM 0,76 mm SUPLEMENTO	SPESSORE CALCO DE AFINACAO	CALE D'EPAISSEUR DIKTEPLAAT	EINSTELLSCHEIBCHEN MELLEMLAEG	198S
51		613-10030		6	SCREW M10 x 30 TORNILLO	VITE PARAFUSO	VIS SCHROEF	SCHRAUBE SKRUE	7450

RANGE TRANSMISSION - HOUSING, BSN AJB0355338
CAMBIO GAMMA - ALLOGGIAMENTO, BSN AJB0355338
CARTER DE LA BOÎTE DE GAMMES, BSN AJB0355338
GRUPPENGETRIEBEGEHÄUSE, BSN AJB0355338

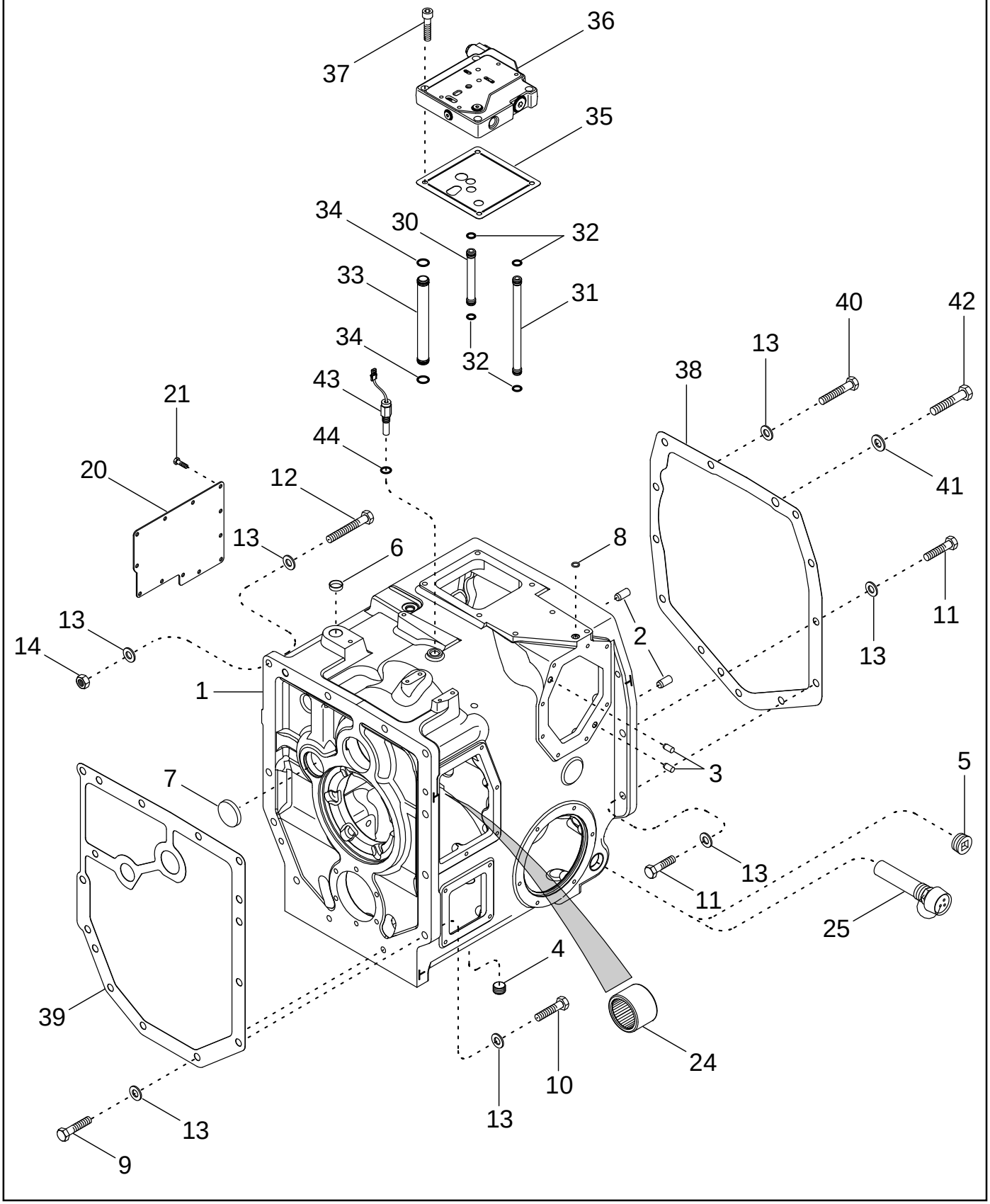

RANGO DE LA TRANSMISIÓN - ALOJAMIENTO, BSN AJB0355338
TRANSMISSÃO DAS RELAÇÕES DE VELOCIDADE - ESTRUTURA, BSN AJB0355338
GROEPSTRANSMISSIE - BEHUIZING, BSN AJB0355338
OMRÅDETRANSMISSION - HUS, BSN AJB0355338

R	N	P.N.	MOD	Q	Description Denominacion	Descrizione Denominação	Description Beschrijving	Bezeichnung Beskrivelse	L.C.
1		396069A4		1	HOUSING ASSY. Inc. 2 - 8 CUBIERTA PRINCIPAL	ALLOGGIAM., COMPL. CARCAÇA CONJUNTO	CARTER (ASSEMBLE) HOUSING ASSY.	GEHAEUSE (KPLT.) HOUSING ASSY.	P479
2		837-16035		4	DOWEL 16 x 35 mm PITON	GRANO GUIA	PION STEL PEN	PAßTIFT DYVEL	P176
3		837-12025		2	PIN 12 x 25 mm PERNO	PERNO PERNO	AXE PEN	BOLZEN STIFT	080P
4		192792A1		1	PLUG 3/4 in TAPÓN	TAPPO BUJÃO	BOUCHON PLUG	STOPFEN PROP	050T
5		327080A1		1	PLUG 1-1/4 TAPÓN	TAPPO BUJÃO	BOUCHON PLUG	STOPFEN PROP	050T
6		41-1018		1	PLUG 1-1/8 TAPÓN	TAPPO BUJAO	BOUCHON PLUG	STOPFEN PROP	6400
7		41-1038		1	PLUG 2-3/8 TAPÓN	TAPPO BUJÃO	BOUCHON PLUG	STOPFEN PROP	050T
8		238-6112		1	O-RING 1/2 ID x 3/32 JUNTA HERMETICA	ANELLO TOROIDALE ANEL O	JOINT TORIQUE O-RING	O-RING O-RING	7176
9		828-16085		2	SCREW M16 x 85; 10.9 TORNILLO	VITE PARAFUSO	VIS SCHROEF	SCHRAUBE SKRUE	7450
10		828-16060		2	SCREW M16 x 60; 10.9 TORNILLO	VITE PARAFUSO	VIS SCHROEF	SCHRAUBE SKRUE	7450
11		828-16060		17	SCREW M16 x 60; 10.9 TORNILLO	VITE PARAFUSO	VIS SCHROEF	SCHRAUBE SKRUE	7450
12		828-16110		1	SCREW M16 x 110; 10.9 TORNILLO	VITE PARAFUSO	VIS SCHROEF	SCHRAUBE SKRUE	7450
13		896-12016		24	WASHER 17,5 x 30 x 4 mm ARANDELA	ROSETTA PIANA ANILHA	RONDELLE SLUITRING	SCHEIBE FLADSKIVE	9720
14		829-1316		1	NUT M16; 10 TUERCA	DADO PORCA	ECROU MOER	MUTTER MØTRIK	5780
20		93364C1		1	COVER TAPADERA	COPERCHIO COBERTA	COUVERCLE DEKSEL	DECKEL DÆKSEL	265C
21		628-10025		12	SCREW M10 x 25; 10.9 TORNILLO	VITE PARAFUSO	VIS SCHROEF	SCHRAUBE SKRUE	7450
24		301533R1		1	BEARING COJINETE	CUSCINETTO ROLAMENTO	ROULEMENT BEARING	LAGER BEARING	0600
25		275531A1		1	HEATER 240 Volt RECALENTADOR	RISCALDATORE AQUECEDOR	RECHAUFFEUR VERWARMER	HEIZGERÄT VARMEAPPARAT	105R
30		235976A2		1	TUBE TUBO	TUBETTO TUBO	TUBE BUISJE	SCHLAUCH RØR	195T
31		256544A1		3	TUBE TUBO	TUBETTO TUBO	TUBE BUISJE	SCHLAUCH RØR	195T
32		238-5014		8	O-RING 1/2 ID x 1/16 JUNTA HERMETICA	ANELLO TOROIDALE ANEL O	JOINT TORIQUE O-RING	O-RING O-RING	7176
33		300828A1		1	TUBE TUBO	TUBETTO TUBO	TUBE BUISJE	SCHLAUCH RØR	195T
34		238-5019		2	O-RING 13/16 ID x 1/16 JUNTA HERMETICA	ANELLO TOROIDALE ANEL O	JOINT TORIQUE O-RING	O-RING O-RING	7176
35		253385A2		1	GASKET JUNTA HERMETICA	GUARNIZIONE JUNTA	JOINT DICHTINGSSTUK	DICHTUNG, FLACH PAKNING	123G

RANGE TRANSMISSION - HOUSING, BSN AJB0355338
CAMBIO GAMMA - ALLOGGIAMENTO, BSN AJB0355338
CARTER DE LA BOÎTE DE GAMMES, BSN AJB0355338
GRUPPENGETRIEBEGEHÄUSE, BSN AJB0355338

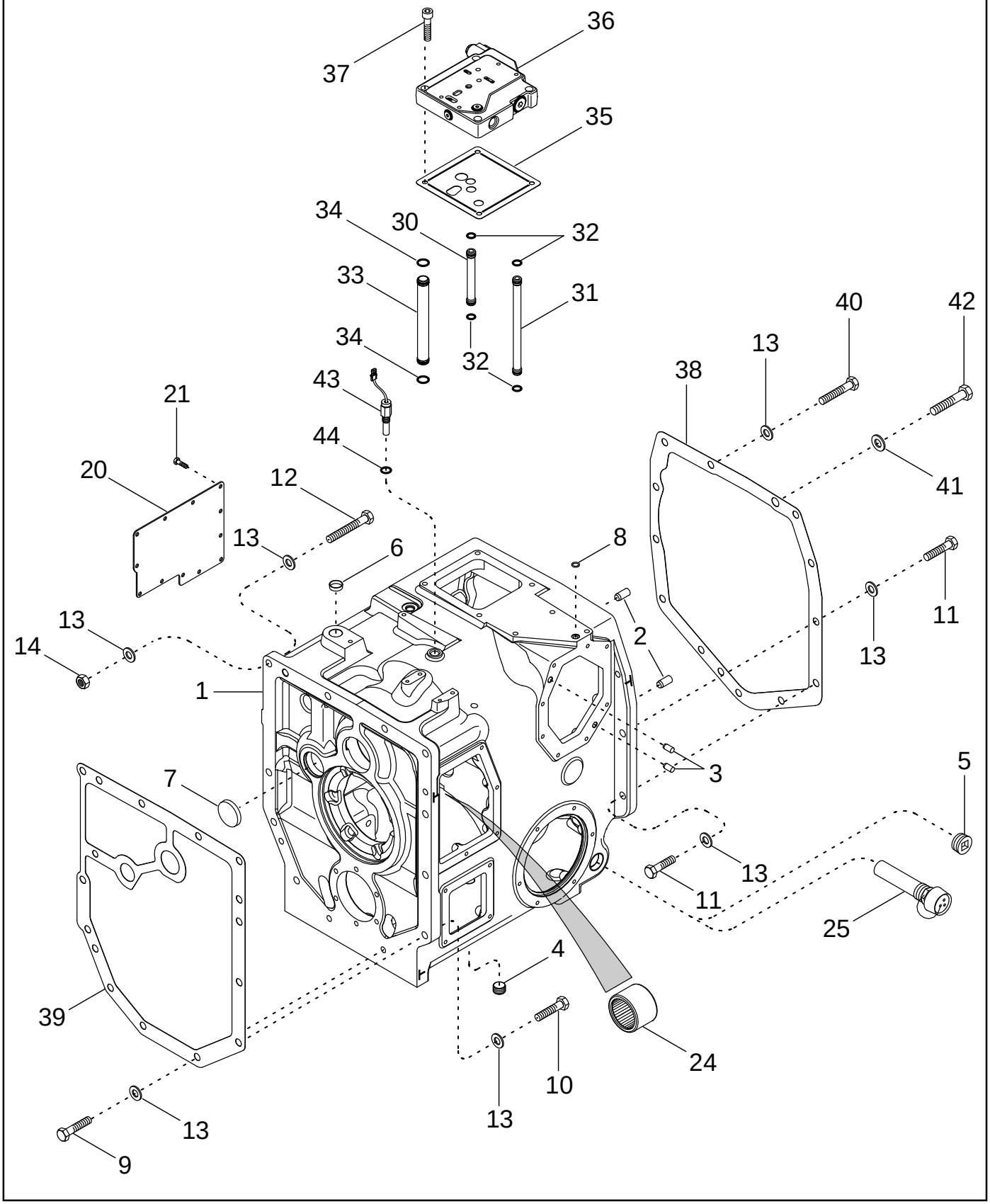

RANGO DE LA TRANSMISIÓN - ALOJAMIENTO, BSN AJB0355338
TRANSMISSÃO DAS RELAÇÕES DE VELOCIDADE - ESTRUTURA, BSN AJB0355338
GROEPSTRANSMISSIE - BEHUIZING, BSN AJB0355338
OMRÅDETRANSMISSION - HUS, BSN AJB0355338

R	N	P.N.	MOD	Q	Description Denominacion	Descrizione Denominação	Description Beschrijving	Bezeichnung Beskrivelse	L.C.
36	1	445537A2		1	VALVE Inching VALVULA	VALVOLA VALVULA	VALVE VALVE	VENTIL VALVE	P468
37		861-10045		4	SCREW M10 x 45; 12.9 TORNILLO	VITE PARAFUSO	VIS SCHROEF	SCHRAUBE SKRUE	7450
38		93410C2		1	GASKET JUNTA HERMETICA	GUARNIZIONE JUNTA	JOINT DICHTINGSSTUK	DICHTUNG, FLACH PAKNING	123G
39		92821C2		1	GASKET JUNTA HERMETICA	GUARNIZIONE JUNTA	JOINT DICHTINGSSTUK	DICHTUNG, FLACH PAKNING	123G
40		828-16080		1	SCREW M16 x 80; 10.9 TORNILLO	VITE PARAFUSO	VIS SCHROEF	SCHRAUBE SKRUE	7450
41		896-12020		1	WASHER 22 x 37 x 4 mm ARANDELA	ROSETTA PIANA ANILHA	RONDELLE SLUITRING	SCHEIBE FLADSKIVE	9720
42		828-20090		1	SCREW M20 x 90; 10.9 TORNILLO	VITE PARAFUSO	VIS SCHROEF	SCHRAUBE SKRUE	7450
43		87422106		1	SENSOR Speed SENSOR	SENSORE SENSOR	CAPTEUR SENSOR	SENSOR FØLER	608S
44		238-5115		1	O-RING 11/16 ID x 3/32 JUNTA HERMETICA	ANELLO TOROIDALE ANEL O	JOINT TORIQUE O-RING	O-RING O-RING	7176

(1) See Figure 06-17

RANGE TRANSMISSION - HOUSING, BTW AJB0355338 & AJB0355923
CAMBIO GAMMA - ALLOGGIAMENTO, BTW AJB0355338 & AJB0355923
CARTER DE LA BOÎTE DE GAMMES, BTW AJB0355338 & AJB0355923
GRUPPENGETRIEBEGEHÄUSE, BTW AJB0355338 & AJB0355923

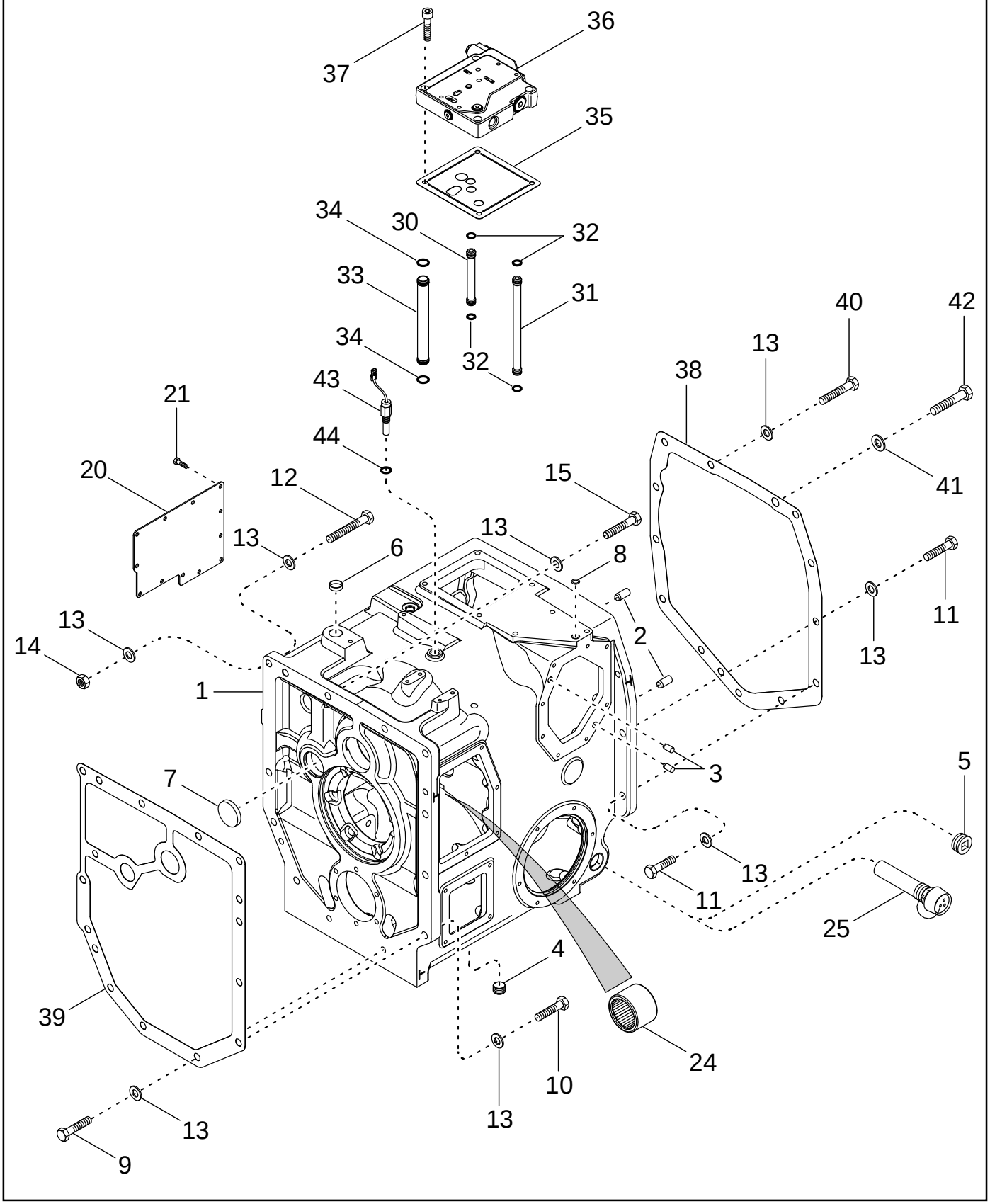

RANGO DE LA TRANSMISIÓN - ALOJAMIENTO, BTW AJB0355338 & AJB0355923
TRANSMISSÃO DAS RELAÇÕES DE VELOCIDADE - ESTRUTURA, BTW AJB0355338 & AJB0355923
GROEPSTRANSMISSIE - BEHUIZING, BTW AJB0355338 & AJB0355923
OMRÅDETRANSMISSION - HUS, BTW AJB0355338 & AJB0355923

R	N	P.N.	MOD	Q	Description Denominacion	Descrizione Denominação	Description Beschrijving	Bezeichnung Beskrivelse	L.C.
1		87445830		1	HOUSING ASSY. Inc. 2 - 8 CUBIERTA PRINCIPAL	ALLOGGIAM., COMPL. CARCAÇA CONJUNTO	CARTER (ASSEMBLE) HOUSING ASSY.	GEHAEUSE (KPLT.) HOUSING ASSY.	P479
2		837-16035		4	DOWEL 16 x 35 mm PITON	GRANO GUIA	PION STEL PEN	PAßTIFT DYVEL	P176
3		837-12025		2	PIN 12 x 25 mm PERNO	PERNO PERNO	AXE PEN	BOLZEN STIFT	080P
4		192792A1		1	PLUG 3/4 in TAPÓN	TAPPO BUJÃO	BOUCHON PLUG	STOPFEN PROP	050T
5		327080A1		1	PLUG 1-1/4 TAPÓN	TAPPO BUJÃO	BOUCHON PLUG	STOPFEN PROP	050T
6		41-1018		1	PLUG 1-1/8 TAPÓN	TAPPO BUJAO	BOUCHON PLUG	STOPFEN PROP	6400
7		41-1038		1	PLUG 2-3/8 TAPÓN	TAPPO BUJÃO	BOUCHON PLUG	STOPFEN PROP	050T
8		238-6112		1	O-RING 1/2 ID x 3/32 JUNTA HERMETICA	ANELLO TOROIDALE ANEL O	JOINT TORIQUE O-RING	O-RING O-RING	7176
9		828-16085		2	SCREW M16 x 85; 10.9 TORNILLO	VITE PARAFUSO	VIS SCHROEF	SCHRAUBE SKRUE	7450
10		828-16060		6	SCREW M16 x 60; 10.9 TORNILLO	VITE PARAFUSO	VIS SCHROEF	SCHRAUBE SKRUE	7450
11		828-16060		9	SCREW M16 x 60; 10.9 TORNILLO	VITE PARAFUSO	VIS SCHROEF	SCHRAUBE SKRUE	7450
12		828-16120		1	SCREW M16 x 120; 10.9 TORNILLO	VITE PARAFUSO	VIS SCHROEF	SCHRAUBE SKRUE	7450
13		896-12016		24	WASHER 17,5 x 30 x 4 mm ARANDELA	ROSETTA PIANA ANILHA	RONDELLE SLUITRING	SCHEIBE FLADSKIVE	9720
14		829-1316		1	NUT M16; 10 TUERCA	DADO PORCA	ECROU MOER	MUTTER MØTRIK	5780
15		828-16070		3	SCREW M16 x 70; 10.9 TORNILLO	VITE PARAFUSO	VIS SCHROEF	SCHRAUBE SKRUE	7450
20		93364C1		1	COVER TAPADERA	COPERCHIO COBERTA	COUVERCLE DEKSEL	DECKEL DÆKSEL	265C
21		628-10025		12	SCREW M10 x 25; 10.9 TORNILLO	VITE PARAFUSO	VIS SCHROEF	SCHRAUBE SKRUE	7450
24		301533R1		1	BEARING COJINETE	CUSCINETTO ROLAMENTO	ROULEMENT BEARING	LAGER BEARING	0600
25		275531A1		1	HEATER 240 Volt RECALENTADOR	RISCALDATORE AQUECEDOR	RECHAUFFEUR VERWARMER	HEIZGERÄT VARMEAPPARAT	105R
30		235976A2		1	TUBE TUBO	TUBETTO TUBO	TUBE BUISJE	SCHLAUCH RØR	195T
31		256544A1		3	TUBE TUBO	TUBETTO TUBO	TUBE BUISJE	SCHLAUCH RØR	195T
32		238-5014		8	O-RING 1/2 ID x 1/16 JUNTA HERMETICA	ANELLO TOROIDALE ANEL O	JOINT TORIQUE O-RING	O-RING O-RING	7176
33		300828A1		1	TUBE TUBO	TUBETTO TUBO	TUBE BUISJE	SCHLAUCH RØR	195T
34		238-5019		2	O-RING 13/16 ID x 1/16 JUNTA HERMETICA	ANELLO TOROIDALE ANEL O	JOINT TORIQUE O-RING	O-RING O-RING	7176

RANGE TRANSMISSION - HOUSING, BTW AJB0355338 & AJB0355923
CAMBIO GAMMA - ALLOGGIAMENTO, BTW AJB0355338 & AJB0355923
CARTER DE LA BOÎTE DE GAMMES, BTW AJB0355338 & AJB0355923
GRUPPENGETRIEBEGEHÄUSE, BTW AJB0355338 & AJB0355923

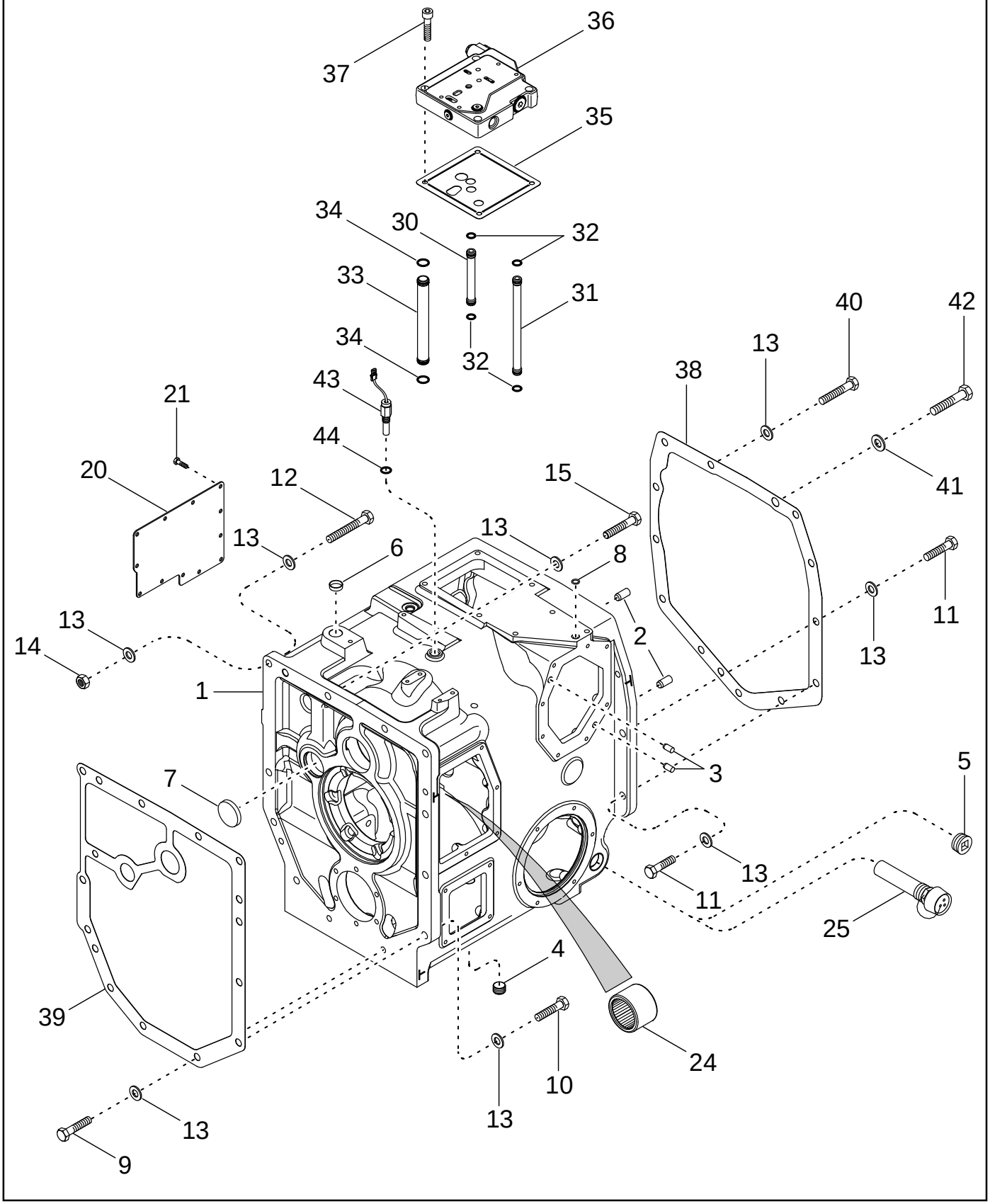

RANGO DE LA TRANSMISIÓN - ALOJAMIENTO, BTW AJB0355338 & AJB0355923
TRANSMISSÃO DAS RELAÇÕES DE VELOCIDADE - ESTRUTURA, BTW AJB0355338 & AJB0355923
GROEPSTRANSMISSIE - BEHUIZING, BTW AJB0355338 & AJB0355923
OMRÅDETRANSMISSION - HUS, BTW AJB0355338 & AJB0355923

R	N	P.N.	MOD	Q	Description Denominacion	Descrizione Denominação	Description Beschrijving	Bezeichnung Beskrivelse	L.C.
35		253385A2		1	GASKET JUNTA HERMETICA	GUARNIZIONE JUNTA	JOINT DICHTINGSSTUK	DICHTUNG, FLACH PAKNING	123G
36	1	445537A2		1	VALVE Inching VALVULA	VALVOLA VALVULA	VALVE VALVE	VENTIL VALVE	P468
37		861-10045		4	SCREW M10 x 45; 12.9 TORNILLO	VITE PARAFUSO	VIS SCHROEF	SCHRAUBE SKRUE	7450
38		93410C2		1	GASKET JUNTA HERMETICA	GUARNIZIONE JUNTA	JOINT DICHTINGSSTUK	DICHTUNG, FLACH PAKNING	123G
39		92821C2		1	GASKET JUNTA HERMETICA	GUARNIZIONE JUNTA	JOINT DICHTINGSSTUK	DICHTUNG, FLACH PAKNING	123G
40		828-16080		1	SCREW M16 x 80; 10.9 TORNILLO	VITE PARAFUSO	VIS SCHROEF	SCHRAUBE SKRUE	7450
41		896-12020		1	WASHER 22 x 37 x 4 mm ARANDELA	ROSETTA PIANA ANILHA	RONDELLE SLUITRING	SCHEIBE FLADSKIVE	9720
42		828-20090		1	SCREW M20 x 90; 10.9 TORNILLO	VITE PARAFUSO	VIS SCHROEF	SCHRAUBE SKRUE	7450
43		87422106		1	SENSOR Speed SENSOR	SENSORE SENSOR	CAPTEUR SENSOR	SENSOR FØLER	608S
44		238-5115		1	O-RING 11/16 ID x 3/32 JUNTA HERMETICA	ANELLO TOROIDALE ANEL O	JOINT TORIQUE O-RING	O-RING O-RING	7176

(1) See Figure 06-17

06-16		p1	11/04

RANGE TRANSMISSION - HOUSING, ASN AJB0355923
CAMBIO GAMMA - ALLOGGIAMENTO, ASN AJB0355923
CARTER DE LA BOÎTE DE GAMMES, ASN AJB0355923
GRUPPENGETRIEBEGEHÄUSE, ASN AJB0355923

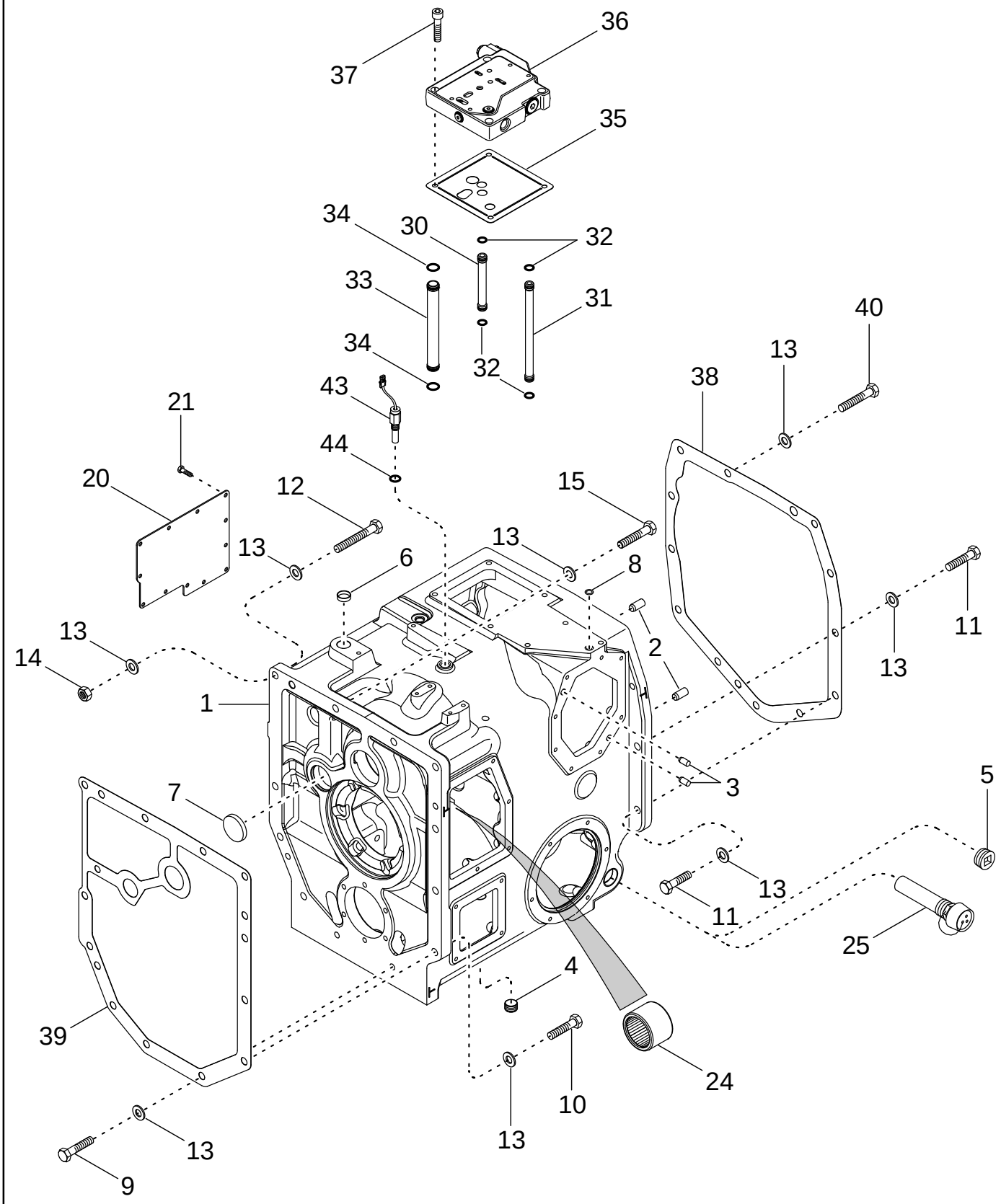

RANGO DE LA TRANSMISIÓN - ALOJAMIENTO, ASN AJB0355923
TRANSMISSÃO DAS RELAÇÕES DE VELOCIDADE - ESTRUTURA, ASN AJB0355923
GROEPSTRANSMISSIE - BEHUIZING, ASN AJB0355923
OMRÅDETRANSMISSION - HUS, ASN AJB0355923

R	N	P.N.	MOD	Q	Description Denominacion	Descrizione Denominação	Description Beschrijving	Bezeichnung Beskrivelse	L.C.
1		87432474		1	HOUSING ASSY. Inc. 2 - 8 CUBIERTA PRINCIPAL	ALLOGGIAM., COMPL. CARCAÇA CONJUNTO	CARTER (ASSEMBLE) HOUSING ASSY.	GEHAEUSE (KPLT.) HOUSING ASSY.	P479
2		837-16035		4	DOWEL 16 x 35 mm PITON	GRANO GUIA	PION STEL PEN	PAßTIFT DYVEL	P176
3		837-12025		2	PIN 12 x 25 mm PERNO	PERNO PERNO	AXE PEN	BOLZEN STIFT	080P
4		192792A1		1	PLUG 3/4 in TAPÓN	TAPPO BUJÃO	BOUCHON PLUG	STOPFEN PROP	050T
5		327080A1		1	PLUG 1-1/4 TAPÓN	TAPPO BUJÃO	BOUCHON PLUG	STOPFEN PROP	050T
6		41-1018		1	PLUG 1-1/8 TAPÓN	TAPPO BUJAO	BOUCHON PLUG	STOPFEN PROP	6400
7		41-1038		1	PLUG 2-3/8 TAPÓN	TAPPO BUJÃO	BOUCHON PLUG	STOPFEN PROP	050T
8		238-6112		1	O-RING 1/2 ID x 3/32 JUNTA HERMETICA	ANELLO TOROIDALE ANEL O	JOINT TORIQUE O-RING	O-RING O-RING	7176
9		828-16085		2	SCREW M16 x 85; 10.9 TORNILLO	VITE PARAFUSO	VIS SCHROEF	SCHRAUBE SKRUE	7450
10		828-16060		6	SCREW M16 x 60; 10.9 TORNILLO	VITE PARAFUSO	VIS SCHROEF	SCHRAUBE SKRUE	7450
11		828-16060		9	SCREW M16 x 60; 10.9 TORNILLO	VITE PARAFUSO	VIS SCHROEF	SCHRAUBE SKRUE	7450
12		828-16120		1	SCREW M16 x 120; 10.9 TORNILLO	VITE PARAFUSO	VIS SCHROEF	SCHRAUBE SKRUE	7450
13		896-12016		24	WASHER 17,5 x 30 x 4 mm ARANDELA	ROSETTA PIANA ANILHA	RONDELLE SLUITRING	SCHEIBE FLADSKIVE	9720
14		829-1316		1	NUT M16; 10 TUERCA	DADO PORCA	ECROU MOER	MUTTER MØTRIK	5780
15		828-16070		3	SCREW M16 x 70; 10.9 TORNILLO	VITE PARAFUSO	VIS SCHROEF	SCHRAUBE SKRUE	7450
20		93364C1		1	COVER TAPADERA	COPERCHIO COBERTA	COUVERCLE DEKSEL	DECKEL DÆKSEL	265C
21		628-10025		12	SCREW M10 x 25; 10.9 TORNILLO	VITE PARAFUSO	VIS SCHROEF	SCHRAUBE SKRUE	7450
24		301533R1		1	BEARING COJINETE	CUSCINETTO ROLAMENTO	ROULEMENT BEARING	LAGER BEARING	0600
25		275531A1		1	HEATER 240 Volt RECALENTADOR	RISCALDATORE AQUECEDOR	RECHAUFFEUR VERWARMER	HEIZGERÄT VARMEAPPARAT	105R
30		235976A2		1	TUBE TUBO	TUBETTO TUBO	TUBE BUISJE	SCHLAUCH RØR	195T
31		256544A1		3	TUBE TUBO	TUBETTO TUBO	TUBE BUISJE	SCHLAUCH RØR	195T
32		238-5014		8	O-RING 1/2 ID x 1/16 JUNTA HERMETICA	ANELLO TOROIDALE ANEL O	JOINT TORIQUE O-RING	O-RING O-RING	7176
33		300828A1		1	TUBE TUBO	TUBETTO TUBO	TUBE BUISJE	SCHLAUCH RØR	195T
34		238-5019		2	O-RING 13/16 ID x 1/16 JUNTA HERMETICA	ANELLO TOROIDALE ANEL O	JOINT TORIQUE O-RING	O-RING O-RING	7176

RANGE TRANSMISSION - HOUSING, ASN AJB0355923
CAMBIO GAMMA - ALLOGGIAMENTO, ASN AJB0355923
CARTER DE LA BOÎTE DE GAMMES, ASN AJB0355923
GRUPPENGETRIEBEGEHÄUSE, ASN AJB0355923

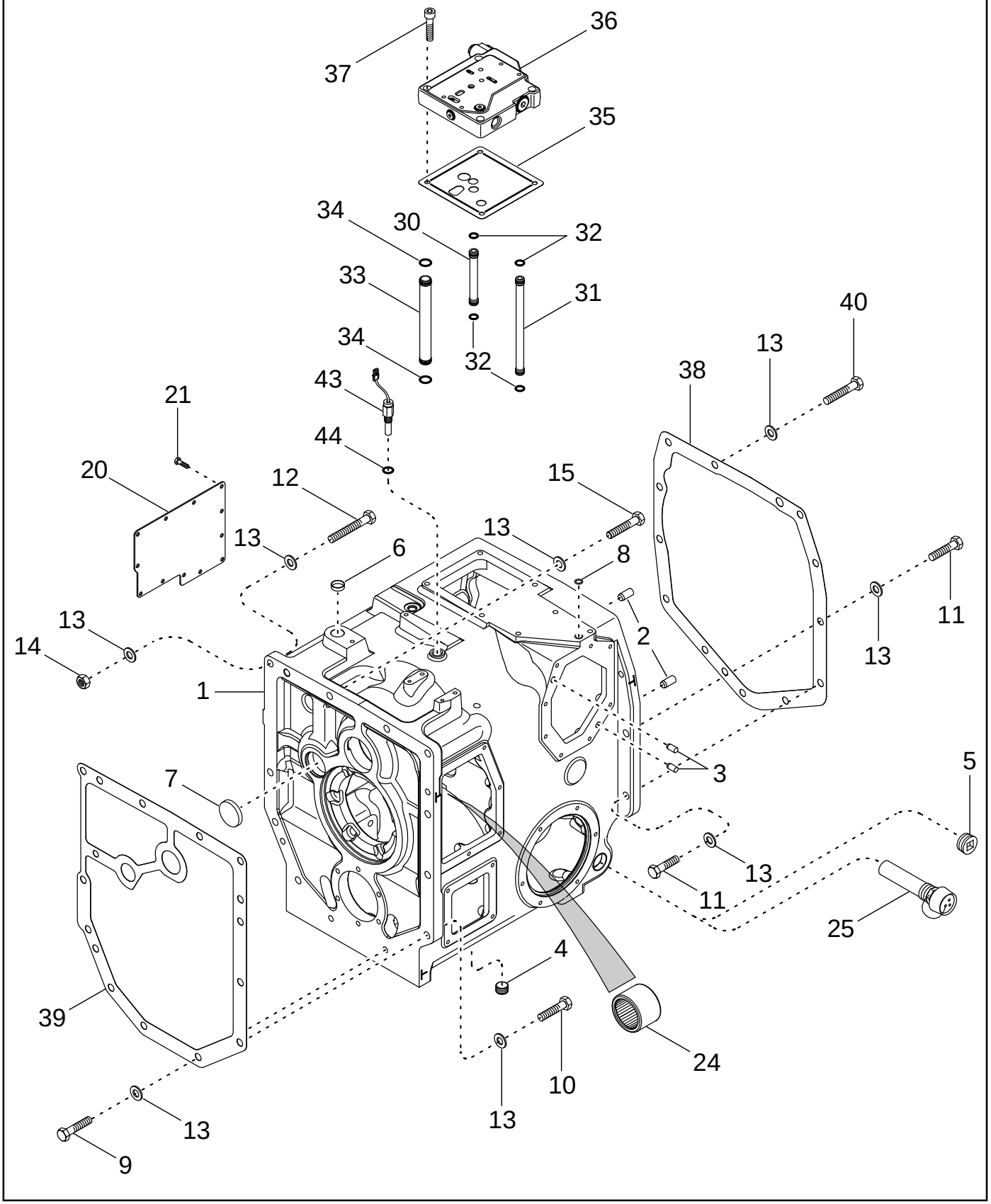

RANGO DE LA TRANSMISIÓN - ALOJAMIENTO, ASN AJB0355923
TRANSMISSÃO DAS RELAÇÕES DE VELOCIDADE - ESTRUTURA, ASN AJB0355923
GROEPSTRANSMISSIE - BEHUIZING, ASN AJB0355923
OMRÅDETRANSMISSION - HUS, ASN AJB0355923

R	N	P.N.	MOD	Q	Description Denominacion	Descrizione Denominação	Description Beschrijving	Bezeichnung Beskrivelse	L.C.
35		253385A2		1	GASKET JUNTA HERMETICA	GUARNIZIONE JUNTA	JOINT DICHTINGSSTUK	DICHTUNG, FLACH PAKNING	123G
36	1	445537A2		1	VALVE Inching VALVULA	VALVOLA VALVULA	VALVE VALVE	VENTIL VALVE	P468
37		861-10045		4	SCREW M10 x 45; 12.9 TORNILLO	VITE PARAFUSO	VIS SCHROEF	SCHRAUBE SKRUE	7450
38		87432783		1	GASKET JUNTA HERMETICA	GUARNIZIONE JUNTA	JOINT DICHTINGSSTUK	DICHTUNG, FLACH PAKNING	123G
39		92821C2		1	GASKET JUNTA HERMETICA	GUARNIZIONE JUNTA	JOINT DICHTINGSSTUK	DICHTUNG, FLACH PAKNING	123G
40		828-16090		4	SCREW M16 x 90; 10.9 TORNILLO	VITE PARAFUSO	VIS SCHROEF	SCHRAUBE SKRUE	7450
43		87422106		1	SENSOR Speed SENSOR	SENSORE SENSOR	CAPTEUR SENSOR	SENSOR FØLER	608S
44		238-5115		1	O-RING 11/16 ID x 3/32 JUNTA HERMETICA	ANELLO TOROIDALE ANEL O	JOINT TORIQUE O-RING	O-RING O-RING	7176

(1) See Figure 06-17

06-17		p1	11/04

VALVE ASSY - INCHING
GRUPPO DELLA VALVOLA - SPOSTAMENTO GRADUALE
SOUPAPE D'APPROCHE
SCHRITTFAHRVENTIL

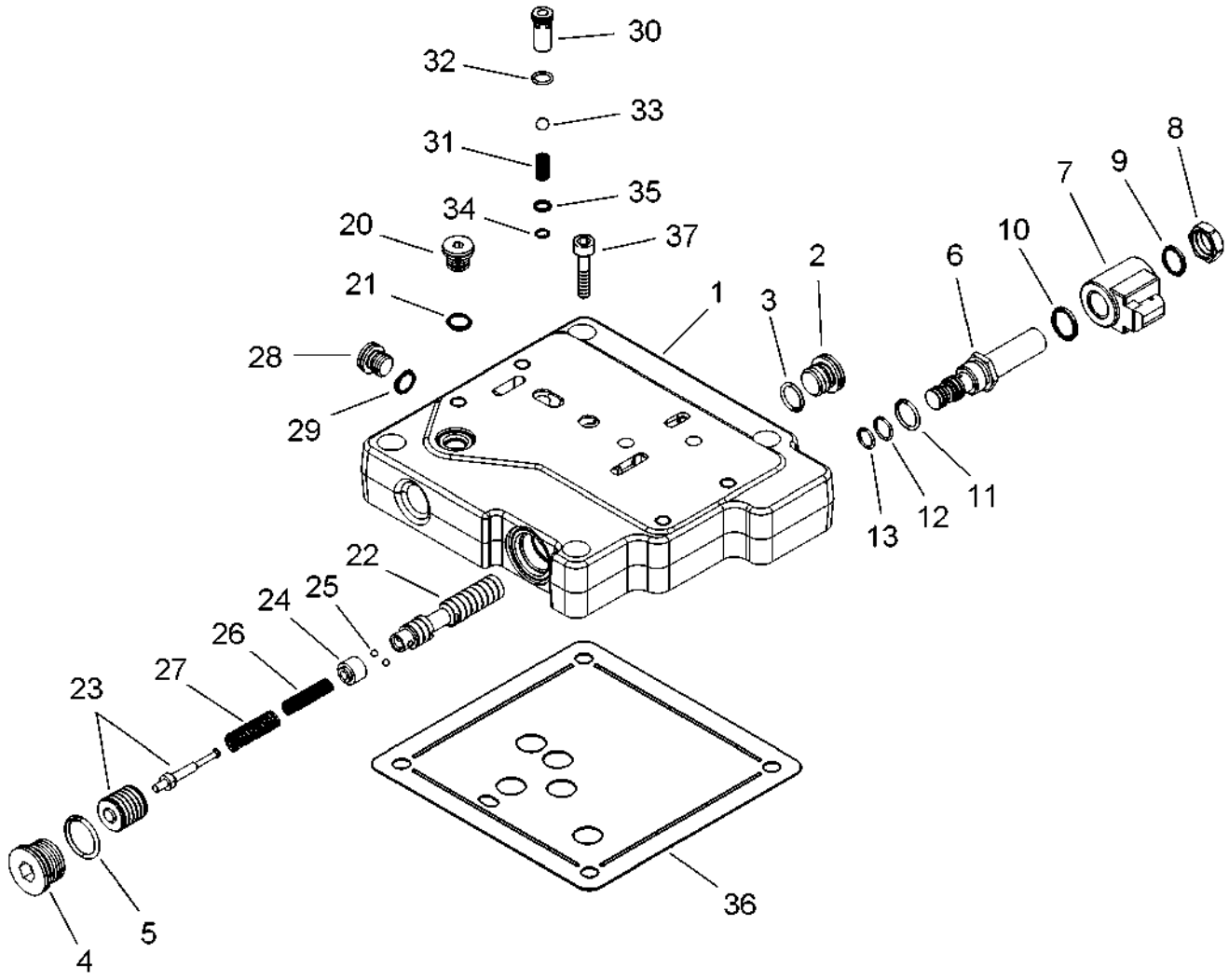

CONJUNTO DE LA VÁLVULA - MARCHA LENTA
CONJUNTO DA VÁLVULA - DESLOCAMENTO LENTO
KLEPCONSTRUCTIE - INCHING
VENTILSAMLING - SKRIDTVIS INDSTILLING

R	N	P.N.	MOD	Q	Description Denominacion	Descrizione Denominação	Description Beschrijving	Bezeichnung Beskrivelse	L.C.
		445537A2		1	VALVE Inc. 1 - 35	VALVOLA	VALVE	VENTIL	P468
					VALVULA	VALVULA	VALVE	VALVE	
1		**NSS**		1	NOT SERVICED SEPARATELY Body, Valve				
						NON FORNITO SEPARAT	NON FOURNI SEPAREMI	KEIN ERSATZTEIL	064N
					NO SE REPARA SEPARA	NOT SERVICED SEPARA	NIET ALLEEN VERKRIJG	NOT SERVICED SEPARA	
2		**221578A1**		1	PLUG Inc. 3	TAPPO	BOUCHON	STOPFEN	050T
					TAPÓN	BUJÃO	PLUG	PROP	
3		**637-63153**		1	O-RING 15,3 ID x 2,2	ANELLO TOROIDALE	JOINT THORIQUE	DICHTRING	055A
					JUNTA HERMETICA	O-RING	O-RING	O-RING	
4		**221580A1**		1	PLUG Inc. 5	TAPPO	BOUCHON	STOPFEN	050T
					TAPÓN	BUJÃO	PLUG	PROP	
5		**637-64236**		1	O-RING 23,6 ID x 2,9	ANELLO TOROIDALE	JOINT TORIQUE	O-RING	7176
					JUNTA HERMETICA	ANEL O	O-RING	O-RING	
		239552A2		1	VALVE Solenoid, Inc. 6 - 13	VALVOLA	VALVE	VENTIL	P468
					VALVULA	VALVULA	VALVE	VALVE	
6		**NSS**		1	NOT SERVICED SEPARATELY Cartridge				
						NON FORNITO SEPARAT	NON FOURNI SEPAREMI	KEIN ERSATZTEIL	064N
					NO SE REPARA SEPARA	NOT SERVICED SEPARA	NIET ALLEEN VERKRIJG	NOT SERVICED SEPARA	
7		**NSS**		1	NOT SERVICED SEPARATELY Coil				
						NON FORNITO SEPARAT	NON FOURNI SEPAREMI	KEIN ERSATZTEIL	064N
					NO SE REPARA SEPARA	NOT SERVICED SEPARA	NIET ALLEEN VERKRIJG	NOT SERVICED SEPARA	
8		**NSS**		1	NOT SERVICED SEPARATELY Nut				
						NON FORNITO SEPARAT	NON FOURNI SEPAREMI	KEIN ERSATZTEIL	064N
					NO SE REPARA SEPARA	NOT SERVICED SEPARA	NIET ALLEEN VERKRIJG	NOT SERVICED SEPARA	
		308245A1		1	KIT, SEALS Inc. 9 - 13	SERIE GUARNIZIONI	POCHETTE DE JOINTS	DICHTUNGSSATZ	630S
					SERIE DE JUNTAS	CONJUNTO DE JUNTAS	DICHTINGSKIT	PAKNINGSSAET	
9		**238-7016**		1	O-RING 5/8 ID x 1/16	ANELLO TOROIDALE	JOINT TORIQUE	O-RING	7176
					JUNTA HERMETICA	ANEL O	O-RING	O-RING	
10		**238-7018**		1	O-RING 3/4 ID x 1/16	ANELLO TOROIDALE	JOINT TORIQUE	O-RING	7176
					JUNTA HERMETICA	ANEL O	O-RING	O-RING	
11		**237-6008**		1	O-RING 41/64 ID x 3/32	ANELLO TOROIDALE	JOINT THORIQUE	DICHTRING	055A
					JUNTA HERMETICA	O-RING	O-RING	O-RING	
12		**238-5014**		1	O-RING 1/2 ID x 1/16	ANELLO TOROIDALE	JOINT TORIQUE	O-RING	7176
					JUNTA HERMETICA	ANEL O	O-RING	O-RING	
13		**238-5013**		1	O-RING 7/16 ID x 1/16	ANELLO TOROIDALE	JOINT TORIQUE	O-RING	7176
					JUNTA HERMETICA	ANEL O	O-RING	O-RING	
20		**221576A1**		1	PLUG M14 Or, Inc. 21	TAPPO	BOUCHON	STOPFEN	050T
					TAPÓN	BUJÃO	PLUG	PROP	
21		**637-63113**		1	O-RING 11,3 ID x 2,2	ANELLO TOROIDALE	JOINT THORIQUE	DICHTRING	055A
					JUNTA HERMETICA	O-RING	O-RING	O-RING	
		302170A2		1	SPOOL Inc. 22 - 27	PISTONCINO	TIROIR	SPULE	134P
					PISTONCILLO	CARRETO	SPOEL	SPOLE	
22		**NSS**		1	NOT SERVICED SEPARATELY Spool				
						NON FORNITO SEPARAT	NON FOURNI SEPAREMI	KEIN ERSATZTEIL	064N
					NO SE REPARA SEPARA	NOT SERVICED SEPARA	NIET ALLEEN VERKRIJG	NOT SERVICED SEPARA	
23		**NSS**		1	NOT SERVICED SEPARATELY Piston				
						NON FORNITO SEPARAT	NON FOURNI SEPAREMI	KEIN ERSATZTEIL	064N
					NO SE REPARA SEPARA	NOT SERVICED SEPARA	NIET ALLEEN VERKRIJG	NOT SERVICED SEPARA	

VALVE ASSY - INCHING
GRUPPO DELLA VALVOLA - SPOSTAMENTO GRADUALE
SOUPAPE D'APPROCHE
SCHRITTFAHRVENTIL

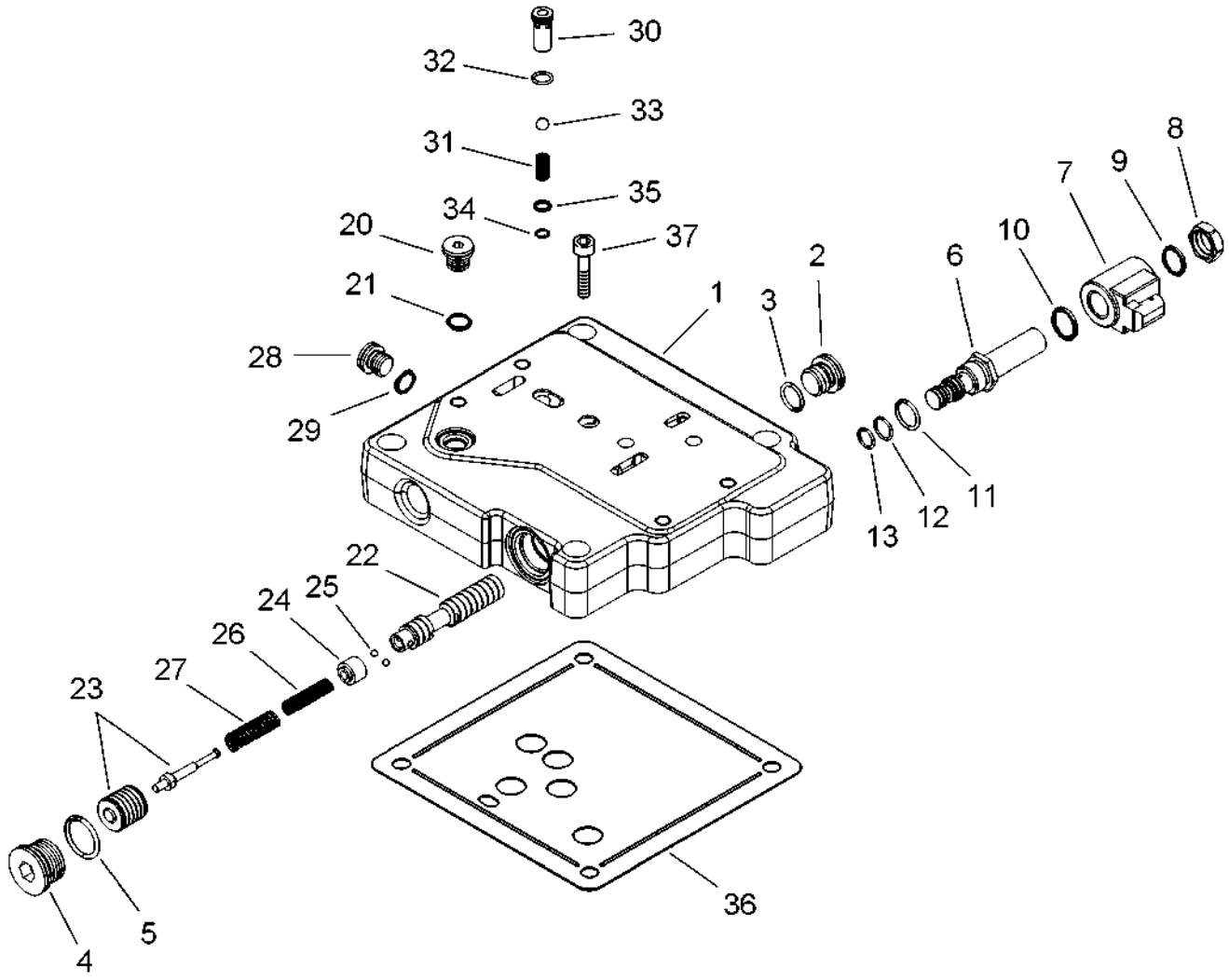

CONJUNTO DE LA VÁLVULA - MARCHA LENTA
CONJUNTO DA VÁLVULA - DESLOCAMENTO LENTO
KLEPCONSTRUCTIE - INCHING
VENTILSAMLING - SKRIDTVIS INDSTILLING

R	N	P.N.	MOD	Q	Description Denominacion	Descrizione Denominação	Description Beschrijving	Bezeichnung Beskrivelse	L.C.
24		NSS		1	NOT SERVICED SEPARATELY Sleeve				
						NON FORNITO SEPARAT	NON FOURNI SEPAREMI	KEIN ERSATZTEIL	064N
					NO SE REPARA SEPARA	NOT SERVICED SEPARA	NIET ALLEEN VERKRIJG	NOT SERVICED SEPARA	
25		NSS		1	NOT SERVICED SEPARATELY Ball				
						NON FORNITO SEPARAT	NON FOURNI SEPAREMI	KEIN ERSATZTEIL	064N
					NO SE REPARA SEPARA	NOT SERVICED SEPARA	NIET ALLEEN VERKRIJG	NOT SERVICED SEPARA	
26		NSS		1	NOT SERVICED SEPARATELY Spring				
						NON FORNITO SEPARAT	NON FOURNI SEPAREMI	KEIN ERSATZTEIL	064N
					NO SE REPARA SEPARA	NOT SERVICED SEPARA	NIET ALLEEN VERKRIJG	NOT SERVICED SEPARA	
27		NSS		1	NOT SERVICED SEPARATELY Spring				
						NON FORNITO SEPARAT	NON FOURNI SEPAREMI	KEIN ERSATZTEIL	064N
					NO SE REPARA SEPARA	NOT SERVICED SEPARA	NIET ALLEEN VERKRIJG	NOT SERVICED SEPARA	
28		221576A1		1	PLUG M14 Or, Inc. 29	TAPPO	BOUCHON	STOPFEN	050T
					TAPÓN	BUJÃO	PLUG	PROP	
29		637-63113		1	O-RING 11,3 ID x 2,2	ANELLO TOROIDALE	JOINT THORIQUE	DICHTRING	055A
					JUNTA HERMETICA	O-RING	O-RING	O-RING	
		445492A2		1	VALVE, CHECK Check, Inc. 30 - 35				
						VALVOLA, DI RITEGNO	CLAPET ANTI-RETOUR	RÜCKSCHLAGVENTIL	P394
					VALVULA DE CIERRE	VALVULA CHECAGEM	INZETSTUK	KONTRAVENTIL	
30		NSS		1	NOT SERVICED SEPARATELY Body				
						NON FORNITO SEPARAT	NON FOURNI SEPAREMI	KEIN ERSATZTEIL	064N
					NO SE REPARA SEPARA	NOT SERVICED SEPARA	NIET ALLEEN VERKRIJG	NOT SERVICED SEPARA	
31		445494A1		1	SPRING, VALVE	MOLLA, VALVOLA	RESSORT, SOUPAPE	VENTILFEDER	P463
					MUELLE, VALVULA	MUELLE, VÁLVULA	SPRING, VALVE	VENTILFJEDER	
32		238-5012		1	O-RING 3/8 ID x 1/16	ANELLO TOROIDALE	JOINT TORIQUE	O-RING	7176
					JUNTA HERMETICA	ANEL O	O-RING	O-RING	
33		211-1009		1	BALL 9/32; 24,CRS	SFERA	BILLE	KUGEL	0460
					BOLA	ESFERA	KOGEL	KUGLE	
34		100-2131		1	SNAP RING No. 31	ANELLO ELASTICO	ANNEAU-D'ARRET	SICHERUNGSRING	P345
					ANILLO DE CIERRE	ANEL TRAVA	SNAP RING	SNAP RING	
35		86988656		1	WASHER, SPRING	MOLLA BELLEVILLE	RONDELLE BELLEVILLE	FEDERSCHEIBE	P692
					ARANDELA ABANICO	ARRUELA MOLA	WASHER, SPRING	BELLEVILLEVASKER	
36		253385A2		1	GASKET	GUARNIZIONE	JOINT	DICHTUNG, FLACH	123G
					JUNTA HERMETICA	JUNTA	DICHTINGSSTUK	PAKNING	
37		861-10045		4	SCREW M10 x 45; 12.9	VITE	VIS	SCHRAUBE	7450
					TORNILLO	PARAFUSO	SCHROEF	SKRUE	

RANGE TRANSMISSION - INPUT SHAFT
CAMBIO GAMMA - ALBERO D'ENTRATA
BOÎTE DE GAMMES - ARBRE D'ADMISSION
EINGANGSWELLE FÜR GRUPPENGETRIEBE

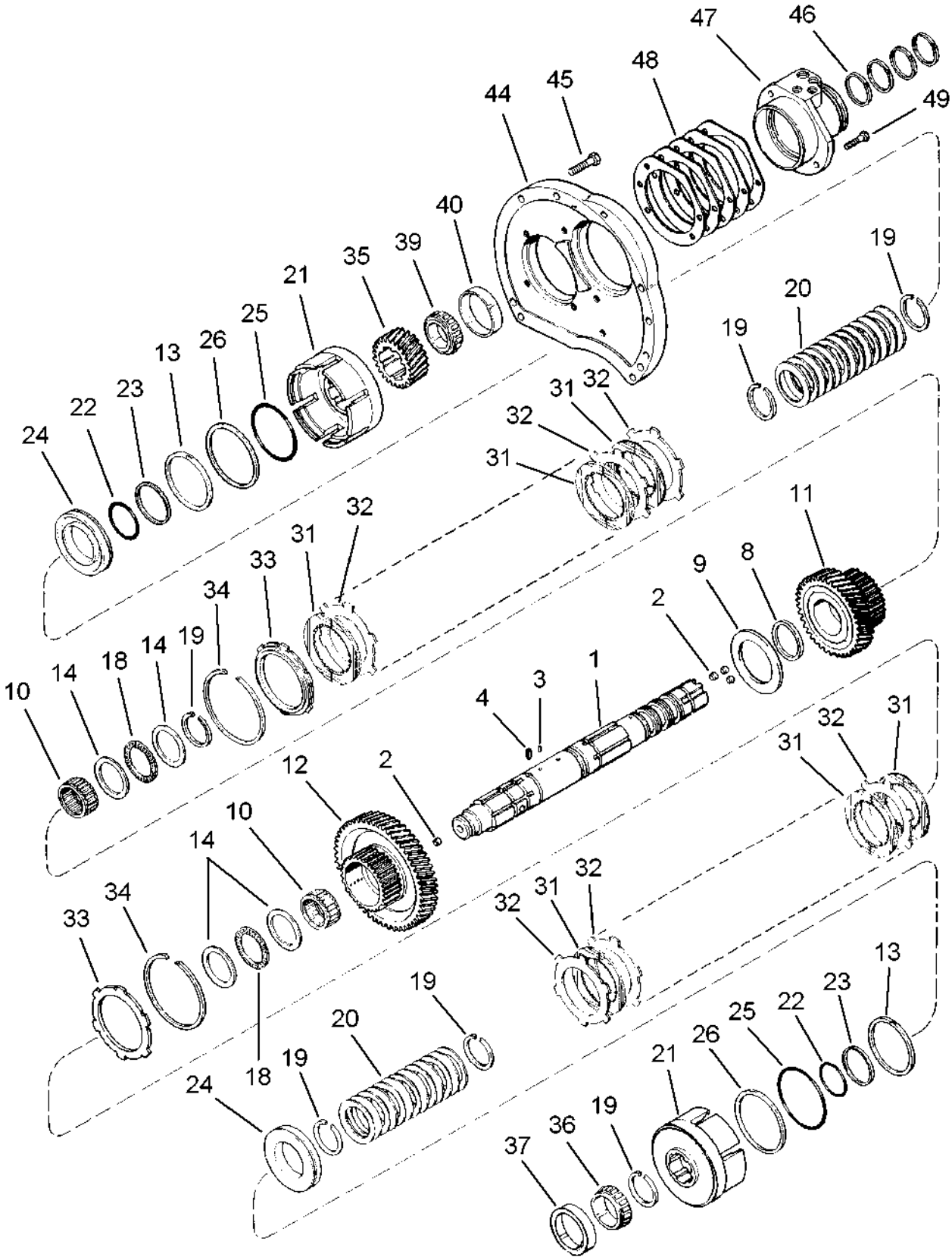

TRANSMISIÓN DE RANGO - EJE DE ENTRADA
TRANSMISSÃO DAS RELAÇÕES DE VELOCIDADE - EIXO DE ENTRADA
GROEPSTRANSMISSIE - INVOERAS
OMRÅDETRANSMISSION - INDGANGSAKSEL

R	N	P.N.	MOD	Q	Description Denominacion	Descrizione Denominação	Description Beschrijving	Bezeichnung Beskrivelse	L.C.
1		1997446C2		1	SHAFT ASSY. Inc. 2 - 4 ARBOL (CONJUNTO)	ALBERO, COMPLESSIVO EIXO CONJUNTO	ARBRE (ASSEMBLE) SHAFT ASSY.	WELLE (KPLT.) SHAFT ASSY.	P431
2		187516A1		4	PLUG TAPÓN	TAPPO BUJÃO	BOUCHON PLUG	STOPFEN PROP	050T
3		38-3605		5	PIN 3/32 x 5/16 PERNO	PERNO PERNO	AXE PEN	BOLZEN STIFT	080P
4		1963874C1		1	PIN 5/16 x 14 mm PERNO	PERNO PERNO	AXE PEN	BOLZEN STIFT	080P
8		1286040C2		1	RING ANILLO	ANELLO ANEL	ANNEAU RING	RING RING	045A
9		1997888C1		1	WASHER, THRUST ARANDELA DE TOPE	RONDELLA, DI SPINTA ANILHA DE ENCOSTO	RONDELLE DE BUTÉE SLUITRING DRUKPLAAT	DRUCKSCHEIBE TRYKSKIVE	023R
10		80909C1		2	BEARING, NEEDLE RODAMIENTO DE RPDIL	CUSCINETTO A RULLINI ROLAMENTO	ROULEMENT A AIGUILLE LAGER, NAALD	NADELLAGER NAALELEJE	344C
11		86987610		1	PINION 37T PINON	PIGNONE PINHAO	PIGNON PINION	RITZEL PINION	P045
12		86987612		1	PINION 59T PINON	PIGNONE PINHAO	PIGNON PINION	RITZEL PINION	P045
13		1286052C1		2	RING ANILLO	ANELLO ANEL	ANNEAU RING	RING RING	045A
14		1286043C1		4	WASHER, THRUST ARANDELA DE TOPE	RONDELLA, DI SPINTA ANILHA DE ENCOSTO	RONDELLE DE BUTÉE SLUITRING DRUKPLAAT	DRUCKSCHEIBE TRYKSKIVE	023R
18		572182R1		2	BEARING, THRUST COJINETE DE EMBRAGU	CUSCINETTO, REGGISP ROL. ENCOSTO	BUTÉE A BILLES LAGER, DRUKKOPPELIN	DRUKLAGER KUGLELEJE	342C
19		93350C1		6	RING ANILLO	ANELLO ANEL	ANNEAU RING	RING RING	045A
20		1286012C2		26	WASHER ARANDELA	ROSETTA PIANA ANILHA	RONDELLE SLUITRING	BEILAGSCHEIBE FLADSKIVE	131R
21		86987596		2	CARRIER EJE DE SATELITES	PORTASATELLITI PORTA-SATELITES	PILIER, SOUTIEN SATELIETDRAGER	PLANETENTRÄGER SPIDSHJULSHOLDER	196P
22		1286081C1		2	O-RING JUNTA HERMETICA	ANELLO TOROIDALE O-RING	JOINT THORIQUE O-RING	DICHTRING O-RING	055A
23		1286076C1		2	RING ANILLO	ANELLO ANEL	ANNEAU RING	RING RING	045A
24		86987597		2	PISTON EMBOLO	STANTUFFO PISTAO	PISTON ZUIGER	KOLBEN STEMPEL	235S
25		1286083C1		2	O-RING JUNTA HERMETICA	ANELLO TOROIDALE O-RING	JOINT THORIQUE O-RING	DICHTRING O-RING	055A
26		1286079C1		2	RING ANILLO	ANELLO ANEL	ANNEAU RING	RING RING	045A
31		86990276		22	DISC Friction DISCO	DISCO DISCO	DISQUE SCHIJF	SCHEIBE NAV	060D
32		92934C2		22	DISC Separator DISCO	DISCO DISCO	DISQUE SCHIJF	SCHEIBE NAV	060D
33		1342645C3		2	DISC, CLUTCH DISCO (CONJUNTO)	DISCO, FRIZIONE DISCO CONJUNTO	DISQUE-D'EMBRAYAGE DISC, CLUTCH	KUPPLUNGSCHEIBE DISC, CLUTCH	P485
34		1285996C1		2	RING, SNAP ANILLO DE RESORTE	ANELLO ELASTICO ANEL	ANNEAU D'ARRÊT RING, SNAP	SICHERUNGSRING LÅSERING	054A

RANGE TRANSMISSION - INPUT SHAFT
CAMBIO GAMMA - ALBERO D'ENTRATA
BOÎTE DE GAMMES - ARBRE D'ADMISSION
EINGANGSWELLE FÜR GRUPPENGETRIEBE

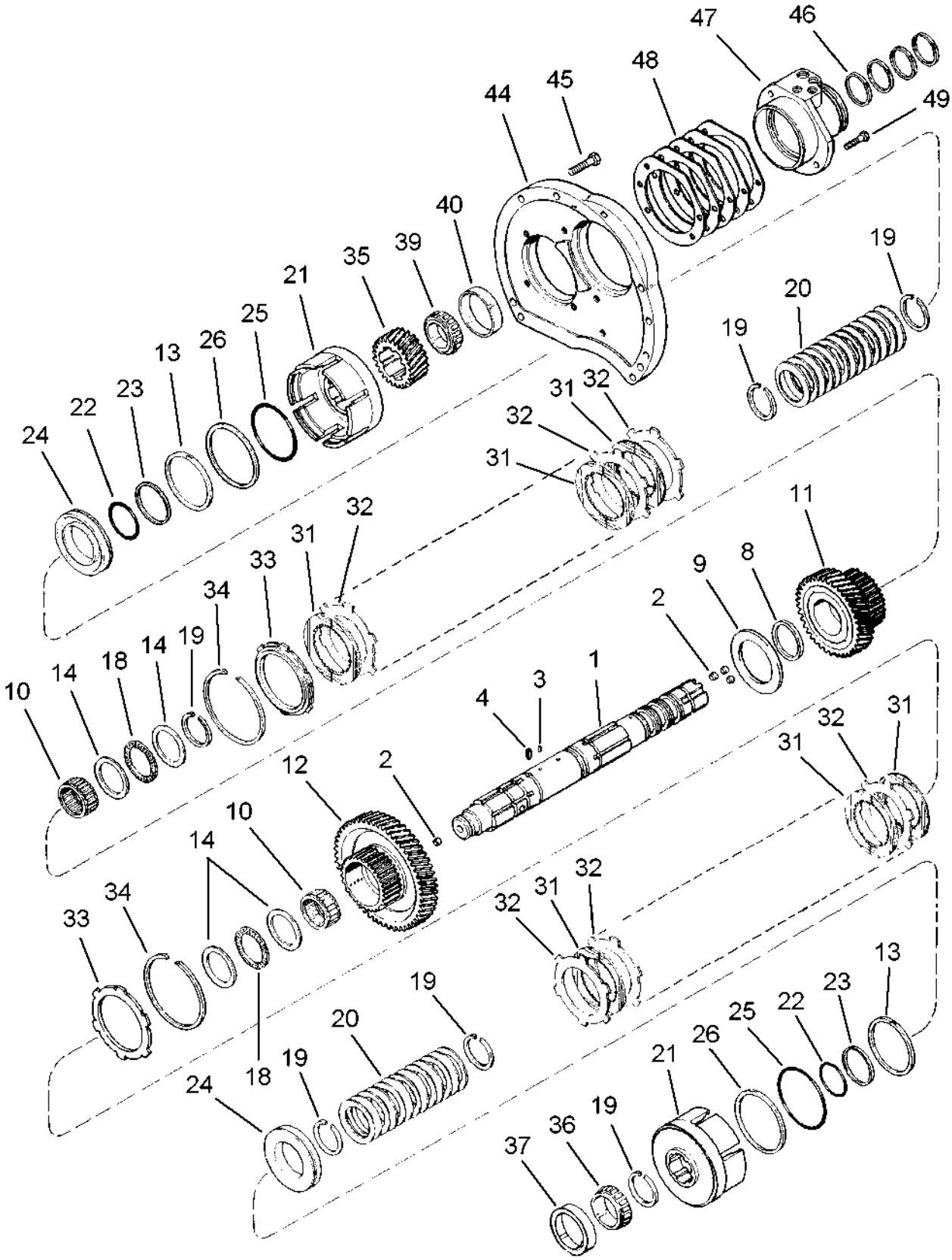

TRANSMISIÓN DE RANGO - EJE DE ENTRADA
TRANSMISSÃO DAS RELAÇÕES DE VELOCIDADE - EIXO DE ENTRADA
GROEPSTRANSMISSIE - INVOERAS
OMRÅDETRANSMISSION - INDGANGSAKSEL

R	N	P.N.	MOD	Q	Description Denominacion	Descrizione Denominação	Description Beschrijving	Bezeichnung Beskrivelse	L.C.
35		1285971C1		1	GEAR, DRIVING PINON CONDUCTOR	INGRANAGGIO CONDUT CARRETO MOTOR	PIGNON CONDUCTEUR AANDRIJVINGSTANDWIE	ZAHNRADANTRIEB DRIVTANDHJUL	052I
36		A75211		1	BEARING, CONE CONO	CONO DEL CUSCINETTO CONE	CONE DE ROULEMENT KEGEL	LAGERKONUS LEJEKONUS	237C
37		A75210		1	BEARING, CUP PISTA DE RODAMIENTO	ANELLO CUSCINETTO ANILHA ROLAMENTO	CUVETTE ROULEMENT LAGER, CUP	LAGERSCHALE LEJERING	062A
39		ST2063		1	BEARING, CONE CONO	CONO DEL CUSCINETTO CONE	CONE DE ROULEMENT KEGEL	LAGERKONUS LEJEKONUS	237C
40		54404R1		1	BEARING, CUP PISTA DE RODAMIENTO	ANELLO CUSCINETTO ANILHA ROLAMENTO	CUVETTE ROULEMENT LAGER, CUP	LAGERSCHALE LEJERING	062A
44		281696A1		1	SUPPORT APOYADERO	SUPPORTO SUPORTE	SUPPORT SUPPORT	STUETZE SUPPORT	8790
45		814-12050		6	SCREW M12 x 50; 8,8 TORNILLO	VITE PARAFUSO	VIS SCHROEF	SCHRAUBE SKRUE	7450
46		1286025C1		4	RING ANILLO	ANELLO ANEL	ANNEAU RING	RING RING	045A
47		254337A2		1	CAGE JAULA	GABBIA GAIOLA	CAGE CAGE	KÄFIG KUGLEHOLDER	1270
48		1286061C1		2	SHIM 0,08 mm SUPLEMENTO	SPESSORE CALCO DE AFINACAO	CALE D'EPAISSEUR DIKTEPLAAT	EINSTELLSCHEIBCHEN MELLEMLAEG	198S
48		1286062C1		2	SHIM 0,10 mm SUPLEMENTO	SPESSORE CALCO DE AFINACAO	CALE D'EPAISSEUR DIKTEPLAAT	EINSTELLSCHEIBCHEN MELLEMLAEG	198S
48		1286063C1		2	SHIM 0,13 mm SUPLEMENTO	SPESSORE CALCO DE AFINACAO	CALE D'EPAISSEUR DIKTEPLAAT	EINSTELLSCHEIBCHEN MELLEMLAEG	198S
48		1286064C1		2	SHIM 0,30 mm SUPLEMENTO	SPESSORE CALCO DE AFINACAO	CALE D'EPAISSEUR DIKTEPLAAT	EINSTELLSCHEIBCHEN MELLEMLAEG	198S
48		1286065C1		2	SHIM 0,76 mm SUPLEMENTO	SPESSORE CALCO DE AFINACAO	CALE D'EPAISSEUR DIKTEPLAAT	EINSTELLSCHEIBCHEN MELLEMLAEG	198S
49		613-10030		3	SCREW M10 x 30 TORNILLO	VITE PARAFUSO	VIS SCHROEF	SCHRAUBE SKRUE	7450

RANGE TRANSMISSION - MASTER CLUTCH
CAMBIO GAMMA - FRIZIONE PRINCIPALE
BOÎTE DE GAMMES - EMBRAYAGE PRINCIPAL
HAUPTKUPPLUNG GRUPPENGETRIEBE

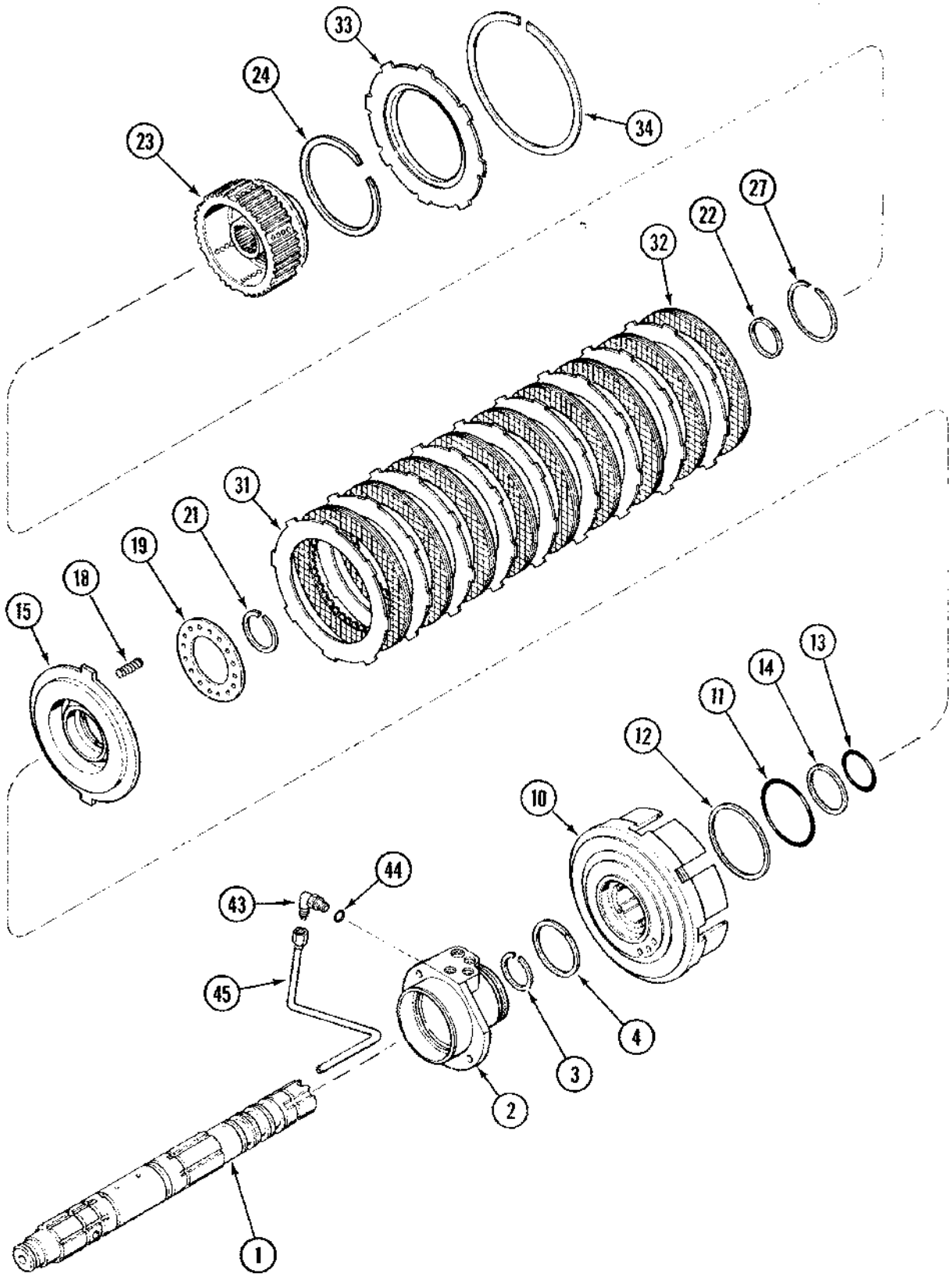

TRANSMISIÓN DE RANGO - EMBRAGUE PRINCIPAL
TRANSMISSÃO DAS RELAÇÕES DE VELOCIDADE - EMBRAIAGEM PRINCIPA
GROEPSTRANSMISSIE - HOOFDKOPPELING
OMRÅDETRANSMISSION - HOVEDKOBLING

R	N	P.N.	MOD	Q	Description Denominacion	Descrizione Denominação	Description Beschrijving	Bezeichnung Beskrivelse	L.C.
1	1	1997446C2		1	SHAFT ASSY. ARBOL (CONJUNTO)	ALBERO, COMPLESSIVO EIXO CONJUNTO	ARBRE (ASSEMBLE) SHAFT ASSY.	WELLE (KPLT.) SHAFT ASSY.	P431
2		254337A2		1	CAGE JAULA	GABBIA GAIOLA	CAGE CAGE	KÄFIG KUGLEHOLDER	1270
3		101-11225		1	RING, SNAP No. 225 ANILLO DE RESORTE	ANELLO ELASTICO ANEL	ANNEAU D'ARRÊT RING, SNAP	SICHERUNGSRING LÅSERING	054A
4		1286027C2		1	RING ANILLO	ANELLO ANEL	ANNEAU RING	RING RING	045A
10		243091A1		1	CARRIER EJE DE SATELITES	PORTASATELLITI PORTA-SATELITES	PILIER, SOUTIEN SATELIETDRAGER	PLANETENTRÄGER SPIDSHJULSHOLDER	196P
11		93138C1		1	O-RING JUNTA HERMETICA	ANELLO TOROIDALE O-RING	JOINT THORIQUE O-RING	DICHTRING O-RING	055A
12		92562C1			RING ANILLO	ANELLO ANEL	ANNEAU RING	RING RING	045A
13		93137C1		1	O-RING JUNTA HERMETICA	ANELLO TOROIDALE O-RING	JOINT THORIQUE O-RING	DICHTRING O-RING	055A
14		92561C1		1	RING ANILLO	ANELLO ANEL	ANNEAU RING	RING RING	045A
15		112299A2		1	PISTON ASSY EMBOLO COMPL	STANTUFFO COMPLETC PISTAO COMPLETO	PISTON COMPLET ZUIGERGEHEEL	KOLBEN KOMPLETT STEMPEL KOMPLET	245S
18		93136C2		16	SPRING RESORTE	MOLLA MOLA	RESSORT VEER	FEDER FJEDER	100M
19		112329A2	a	1	RETAINER RETENEDOR	RITEGNO RETENTOR	RETENEUR HOUDER	HALTEVORRICHTUNG HOLDER	109R
19		112329A3	b	1	RETAINER RETENEDOR	RITEGNO RETENTOR	RETENEUR HOUDER	HALTEVORRICHTUNG HOLDER	109R
21		100-11306		1	SNAP RING No. 306 ANILLO DE CIERRE	ANELLO ELASTICO ANEL TRAVA	ANNEAU-D'ARRET SNAP RING	SICHERUNGSRING SNAP RING	P345
22		92555C1		1	RING ANILLO	ANELLO ANEL	ANNEAU RING	RING RING	045A
23		235913A2	a	1	HUB CUBO	MOZZO CUBO	MOYEU NAAF	NABE NAV	135M
23		235913A3	b	1	HUB CUBO	MOZZO CUBO	MOYEU NAAF	NABE NAV	135M
24		235987A1		1	RING ANILLO	ANELLO ANEL	ANNEAU RING	RING RING	045A
27		100-11200		1	RING, SNAP No. 200 ANILLO DE RESORTE	ANELLO ELASTICO ANEL	ANNEAU D'ARRÊT RING, SNAP	SICHERUNGSRING LÅSERING	054A
31		1285974C1		9	PLATE, CLUTCH, DRIVING DISCO CONDUCTOR EM	Separator DISCO CONDUTT.FRIZIC DISCO CONDUTOR DE E	DISQUE MENANT EMBR. KOPPELINGSAANDRIJFF	KUPPLUNGSTREIBSCHE KOBLINGSNAV, DREV	063D
32		1285975C2		9	DISC, CLUTCH Friction DISCO (CONJUNTO)	DISCO, FRIZIONE DISCO CONJUNTO	DISQUE-D'EMBRAYAGE DISC, CLUTCH	KUPPLUNGSCHEIBE DISC, CLUTCH	P485
33		235851A2		1	DISC Backing DISCO	DISCO DISCO	DISQUE SCHIJF	SCHEIBE NAV	060D

(1) See Figure 06-18
(a) BSN AJB0303751
(b) ASN AJB0303751

RANGE TRANSMISSION - MASTER CLUTCH
CAMBIO GAMMA - FRIZIONE PRINCIPALE
BOÎTE DE GAMMES - EMBRAYAGE PRINCIPAL
HAUPTKUPPLUNG GRUPPENGETRIEBE

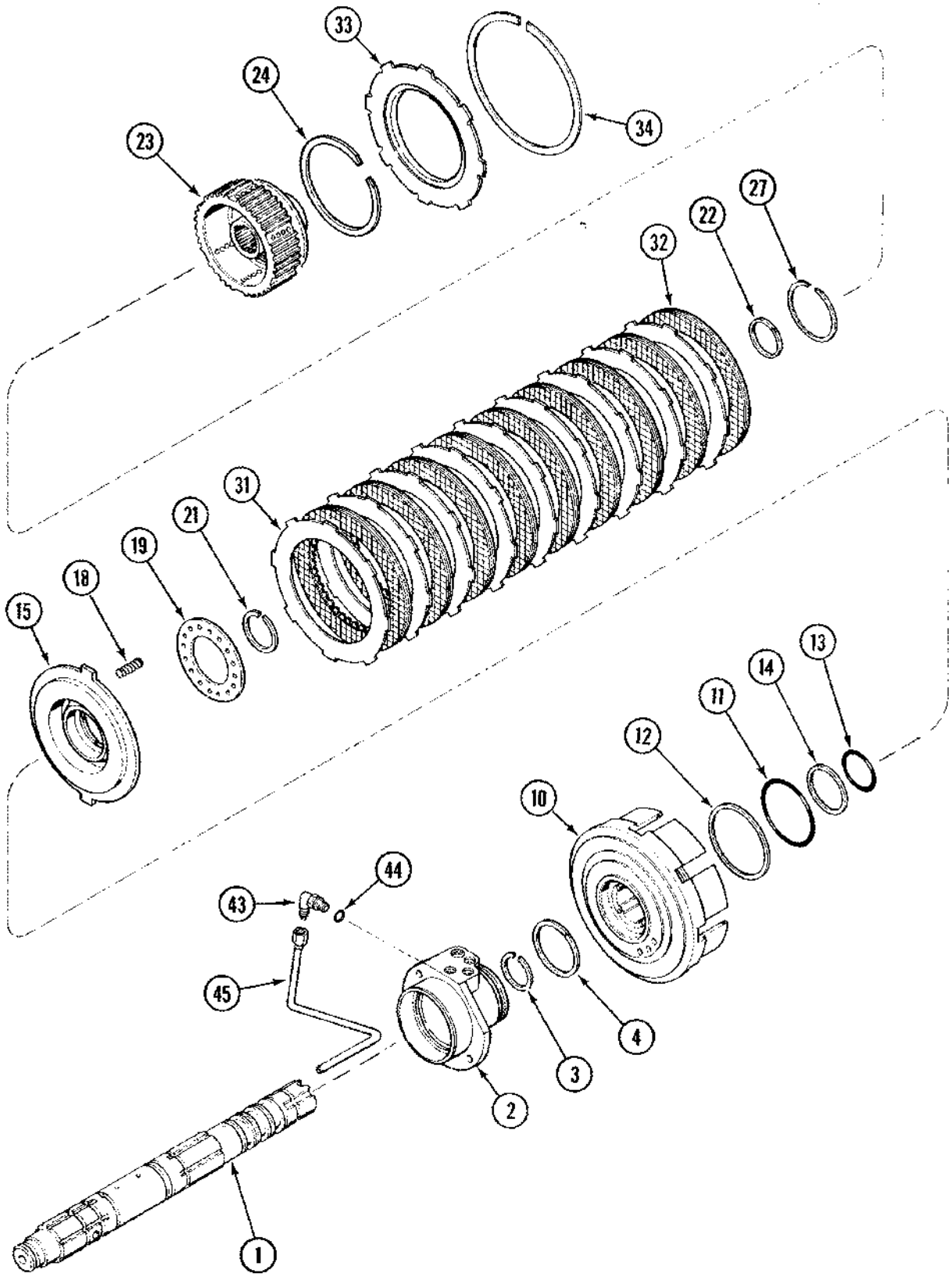

TRANSMISIÓN DE RANGO - EMBRAGUE PRINCIPAL
TRANSMISSÃO DAS RELAÇÕES DE VELOCIDADE - EMBRAIAGEM PRINCIPA
GROEPSTRANSMISSIE - HOOFDKOPPELING
OMRÅDETRANSMISSION - HOVEDKOBLING

R	N	P.N.	MOD	Q	Description Denominacion	Descrizione Denominação	Description Beschrijving	Bezeichnung Beskrivelse	L.C.
34		1963876C1		1	RING, SNAP ANILLO DE RESORTE	ANELLO ELASTICO ANEL	ANNEAU D'ARRÊT RING, SNAP	SICHERUNGSRING LÅSERING	054A
43		218-5105		1	ELBOW 9/16 fl x Or, Inc. 44 CODO	GOMITO JOELHO	COUDE ELLEBOOG	KNIESTÜCK VINKELROER	085G
44		237-6006		1	O-RING 15/32 ID x 5/64 JUNTA HERMETICA	ANELLO TOROIDALE O-RING	JOINT THORIQUE O-RING	DICHTRING O-RING	055A
45		1963935C2		1	TUBE TUBO	TUBETTO TUBO	TUBE BUISJE	SCHLAUCH RØR	195T

RANGE TRANSMISSION - COUNTERSHAFT
CAMBIO GAMMA - CONTRALBERO
BOÎTE DE GAMMES - ARBRE INTERMÉDIAIRE
VORGELEGEWELLE GRUPPENGETRIEBE

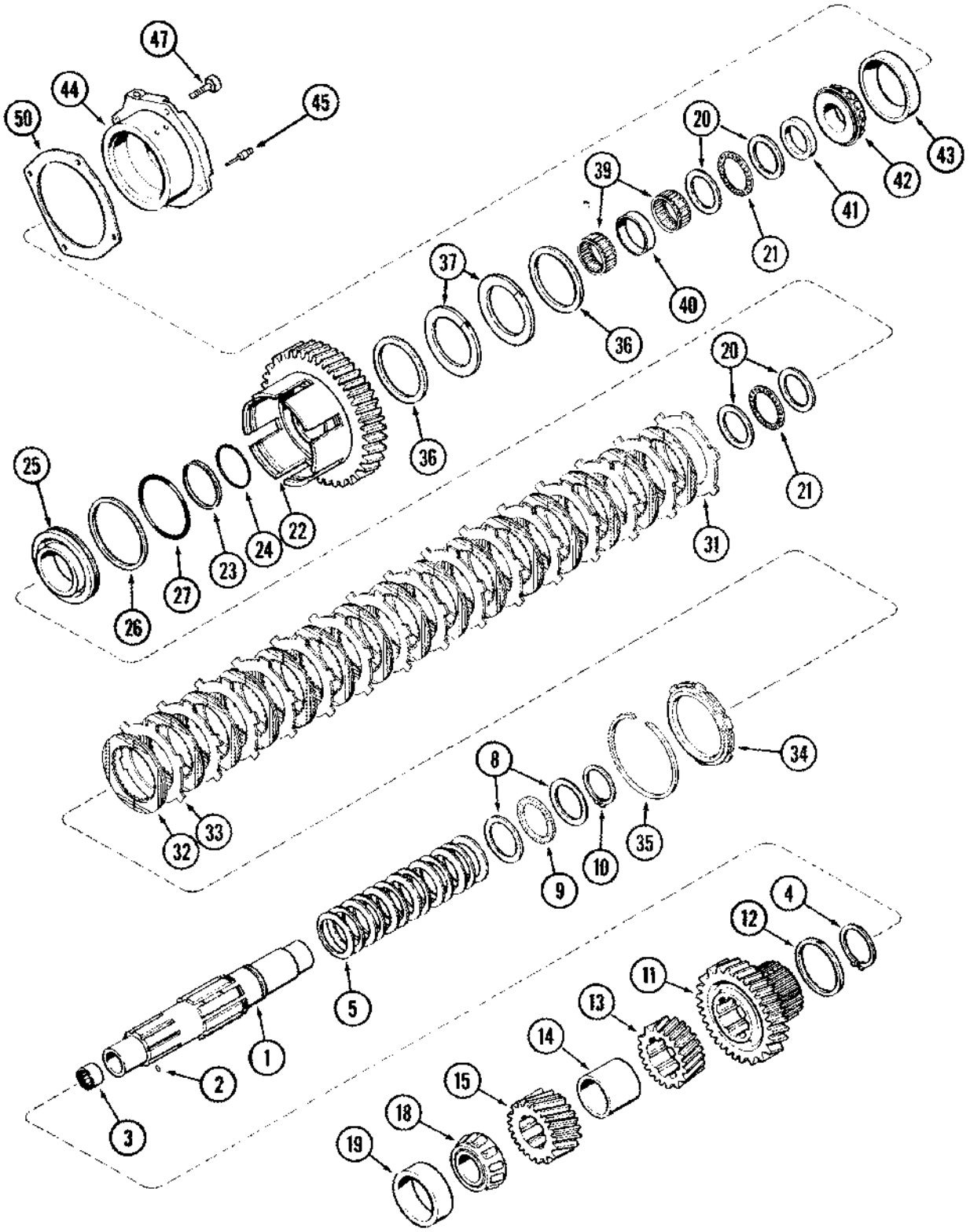

TRANSMISIÓN DE RANGO - EJE INTERMEDIO
TRANSMISSÃO DAS RELAÇÕES DE VELOCIDADE - CONTRA-EIXO
GROEPSTRANSMISSIE - SECUNDAIRE AS
OMRÅDETRANSMISSION - MELLEMAKSEL

R	N	P.N.	MOD	Q	Description Denominacion	Descrizione Denominação	Description Beschrijving	Bezeichnung Beskrivelse	L.C.
1		1954059C2		1	SHAFT Inc. 2 EJE	ALBERO VEIO	ARBRE AS	WELLE AKSEL	016A
2		38-3605		3	PIN 3/32 x 5/16 PERNO	PERNO PERNO	AXE PEN	BOLZEN STIFT	080P
3		D63322		1	BEARING, NEEDLE RODAMIENTO DE RPDIL	CUSCINETTO A RULLINI ROLAMENTO	ROULEMENT A AIGUILLE LAGER, NAALD	NADELLAGER NAALELEJE	344C
4		144348C1		1	RING, SNAP ANILLO DE RESORTE	ANELLO ELASTICO ANEL	ANNEAU D'ARRÊT RING, SNAP	SICHERUNGSRING LÅSERING	054A
5		1286012C2		13	WASHER ARANDELA	ROSETTA PIANA ANILHA	RONDELLE SLUITRING	BEILAGSCHEIBE FLADSKIVE	131R
8		1286043C1		2	WASHER, THRUST ARANDELA DE TOPE	RONDELLA, DI SPINTA ANILHA DE ENCOSTO	RONDELLE DE BUTÉE SLUITRING DRUKPLAAT	DRUCKSCHEIBE TRYKSKIVE	023R
9		572182R1		1	BEARING, THRUST COJINETE DE EMBRAGU	CUSCINETTO, REGGISP ROL. ENCOSTO	BUTÉE A BILLES LAGER, DRUKKOPPELIN	DRUKLAGER KUGLELEJE	342C
10		101-11250		1	CIRCLIP No. 250 RETENEDOR	ANELLO DI RITEGNO FREIO DE MOLA	CIRCLIP BOORGVEER	HALTERING LÃSERING	P019
11		1285978C1		1	PINION 39T PINON	PIGNONE PINHAO	PIGNON PINION	RITZEL PINION	P045
12		1286052C1		1	RING ANILLO	ANELLO ANEL	ANNEAU RING	RING RING	045A
13		220057A1		1	PINION 25T PINON	PIGNONE PINHAO	PIGNON PINION	RITZEL PINION	P045
14		1286041C2		1	SPACER SEPARADOR	DISTANZIALE ESPACADOR	ENTRETOISE AFSTANDSRING	DISTANZSTÜCK AFSTANDSSTYKKE	075D
15		1285990C1		1	PINION 23T PINON	PIGNONE PINHAO	PIGNON PINION	RITZEL PINION	P045
18	1, 2	84986C1		1	BEARING, CONE CONO	CONO DEL CUSCINETTO CONE	CONE DE ROULEMENT KEGEL	LAGERKONUS LEJEKONUS	237C
18	3, 4	253485A1		1	BEARING, CONE CONO	CONO DEL CUSCINETTO CONE	CONE DE ROULEMENT KEGEL	LAGERKONUS LEJEKONUS	237C
19	1, 2	40435		1	BEARING, CUP PISTA DE RODAMIENTO	ANELLO CUSCINETTO ANILHA ROLAMENTO	CUVETTE ROULEMENT LAGER, CUP	LAGERSCHALE LEJERING	062A
19	3, 4	253486A1		1	BEARING, CUP PISTA DE RODAMIENTO	ANELLO CUSCINETTO ANILHA ROLAMENTO	CUVETTE ROULEMENT LAGER, CUP	LAGERSCHALE LEJERING	062A
20		1286042C1		4	WASHER, THRUST ARANDELA DE TOPE	RONDELLA, DI SPINTA ANILHA DE ENCOSTO	RONDELLE DE BUTÉE SLUITRING DRUKPLAAT	DRUCKSCHEIBE TRYKSKIVE	023R
21		K620185		2	BEARING, THRUST COJINETE DE EMBRAGU	CUSCINETTO, REGGISP ROL. ENCOSTO	BUTÉE A BILLES LAGER, DRUKKOPPELIN	DRUKLAGER KUGLELEJE	342C
22		297134A1		1	GEAR 54T ENGRANAJE	INGRANAGGIO CARRETO	PIGNON TANDWIEL	ZAHNRAD TANDHJUL	050I
23		1286077C1		1	RING ANILLO	ANELLO ANEL	ANNEAU RING	RING RING	045A
24		1286081C1		1	O-RING JUNTA HERMETICA	ANELLO TOROIDALE O-RING	JOINT THORIQUE O-RING	DICHTRING O-RING	055A

(1) MX210
(2) MX230
(3) MX255
(4) MX285

RANGE TRANSMISSION - COUNTERSHAFT
CAMBIO GAMMA - CONTRALBERO
BOÎTE DE GAMMES - ARBRE INTERMÉDIAIRE
VORGELEGEWELLE GRUPPENGETRIEBE

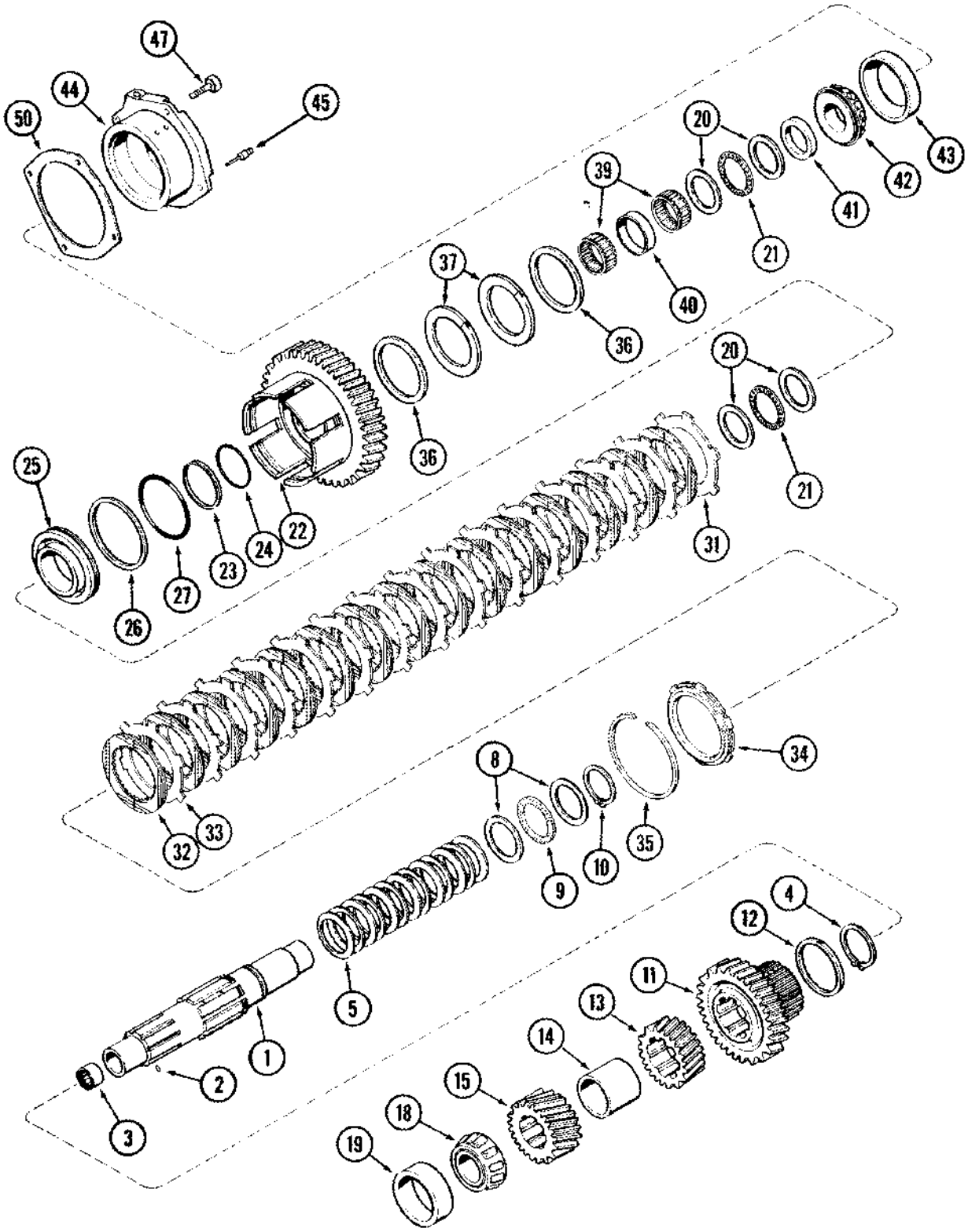

TRANSMISIÓN DE RANGO - EJE INTERMEDIO
TRANSMISSÃO DAS RELAÇÕES DE VELOCIDADE - CONTRA-EIXO
GROEPSTRANSMISSIE - SECUNDAIRE AS
OMRÅDETRANSMISSION - MELLEMAKSEL

R	N	P.N.	MOD	Q	Description Denominacion	Descrizione Denominação	Description Beschrijving	Bezeichnung Beskrivelse	L.C.
25		242491A5		1	PISTON EMBOLO	STANTUFFO PISTAO	PISTON ZUIGER	KOLBEN STEMPEL	235S
26		1286079C1		1	RING ANILLO	ANELLO ANEL	ANNEAU RING	RING RING	045A
27		1286083C1		1	O-RING JUNTA HERMETICA	ANELLO TOROIDALE O-RING	JOINT THORIQUE O-RING	DICHTRING O-RING	055A
31		128114A1		1	DISC Separator DISCO	DISCO DISCO	DISQUE SCHIJF	SCHEIBE NAV	060D
32		86990276		15	DISC Friction DISCO	DISCO DISCO	DISQUE SCHIJF	SCHEIBE NAV	060D
33		92934C2		14	DISC Separator DISCO	DISCO DISCO	DISQUE SCHIJF	SCHEIBE NAV	060D
34		1342645C3		1	DISC, CLUTCH DISCO (CONJUNTO)	DISCO, FRIZIONE DISCO CONJUNTO	DISQUE-D'EMBRAYAGE DISC, CLUTCH	KUPPLUNGSCHEIBE DISC, CLUTCH	P485
35		1285996C1		1	RING, SNAP ANILLO DE RESORTE	ANELLO ELASTICO ANEL	ANNEAU D'ARRÊT RING, SNAP	SICHERUNGSRING LÅSERING	054A
36		1286028C2		2	RING ANILLO	ANELLO ANEL	ANNEAU RING	RING RING	045A
37		297418A2		2	SEAL ANILLO DE CIERRE	ANELLO DI TENUTA ANEL DE VEDACAO	JOINT DICHTINGSRING	DICHTUNG PAKNINGSRING	132A
39		80907C1		2	BEARING, NEEDLE RODAMIENTO DE RPDIL	CUSCINETTO A RULLINI ROLAMENTO	ROULEMENT A AIGUILLE LAGER, NAALD	NADELLAGER NAALELEJE	344C
40		93269C1		1	SPACER SEPARADOR	DISTANZIALE ESPACADOR	ENTRETOISE AFSTANDSRING	DISTANZSTÜCK AFSTANDSSTYKKE	075D
41		1286038C2		1	SPACER SEPARADOR	DISTANZIALE ESPACADOR	ENTRETOISE AFSTANDSRING	DISTANZSTÜCK AFSTANDSSTYKKE	075D
42		287679C1		1	BEARING, ROLLER RODAMIENTO DE RODIL	CUSCINETTO A RULLI ROLAMENTO ROLETES	ROULEMENT A ROULEA STEL RINGEN +0.8	ROLLEN LAGER RULLELEJE	346C
43		1968297C1		1	BEARING, CUP PISTA DE RODAMIENTO	ANELLO CUSCINETTO ANILHA ROLAMENTO	CUVETTE ROULEMENT LAGER, CUP	LAGERSCHALE LEJERING	062A
44		257099A2		1	CAGE Inc. 45 JAULA	GABBIA GAIOLA	CAGE CAGE	KÄFIG KUGLEHOLDER	1270
45		1345888C1		1	PLUG TAPÓN	TAPPO BUJÃO	BOUCHON PLUG	STOPFEN PROP	050T
47		613-10030		4	SCREW M10 x 30 TORNILLO	VITE PARAFUSO	VIS SCHROEF	SCHRAUBE SKRUE	7450
50		1286066C1		2	SHIM 0,08 mm SUPLEMENTO	SPESSORE CALCO DE AFINACAO	CALE D'EPAISSEUR DIKTEPLAAT	EINSTELLSCHEIBCHEN MELLEMLAEG	198S
50		1286067C1		2	SHIM 0,10 mm SUPLEMENTO	SPESSORE CALCO DE AFINACAO	CALE D'EPAISSEUR DIKTEPLAAT	EINSTELLSCHEIBCHEN MELLEMLAEG	198S
50		1286068C1		2	SHIM 0,13 mm SUPLEMENTO	SPESSORE CALCO DE AFINACAO	CALE D'EPAISSEUR DIKTEPLAAT	EINSTELLSCHEIBCHEN MELLEMLAEG	198S
50		1286069C1		2	SHIM 0,30 mm SUPLEMENTO	SPESSORE CALCO DE AFINACAO	CALE D'EPAISSEUR DIKTEPLAAT	EINSTELLSCHEIBCHEN MELLEMLAEG	198S
50		1286070C1		2	SHIM 0,76 mm SUPLEMENTO	SPESSORE CALCO DE AFINACAO	CALE D'EPAISSEUR DIKTEPLAAT	EINSTELLSCHEIBCHEN MELLEMLAEG	198S

TRANSMISSION - PINION SHAFT AND GEARS
TRASMISSIONE - ALBERO A PIGNONE E INGRANAGGI
TRANSMISSION - ARBRE DE TRANSMISSION ET ENTRAÎNEMENTS
GETRIEBE-RITZELWELLE UND ZAHNRÄDER

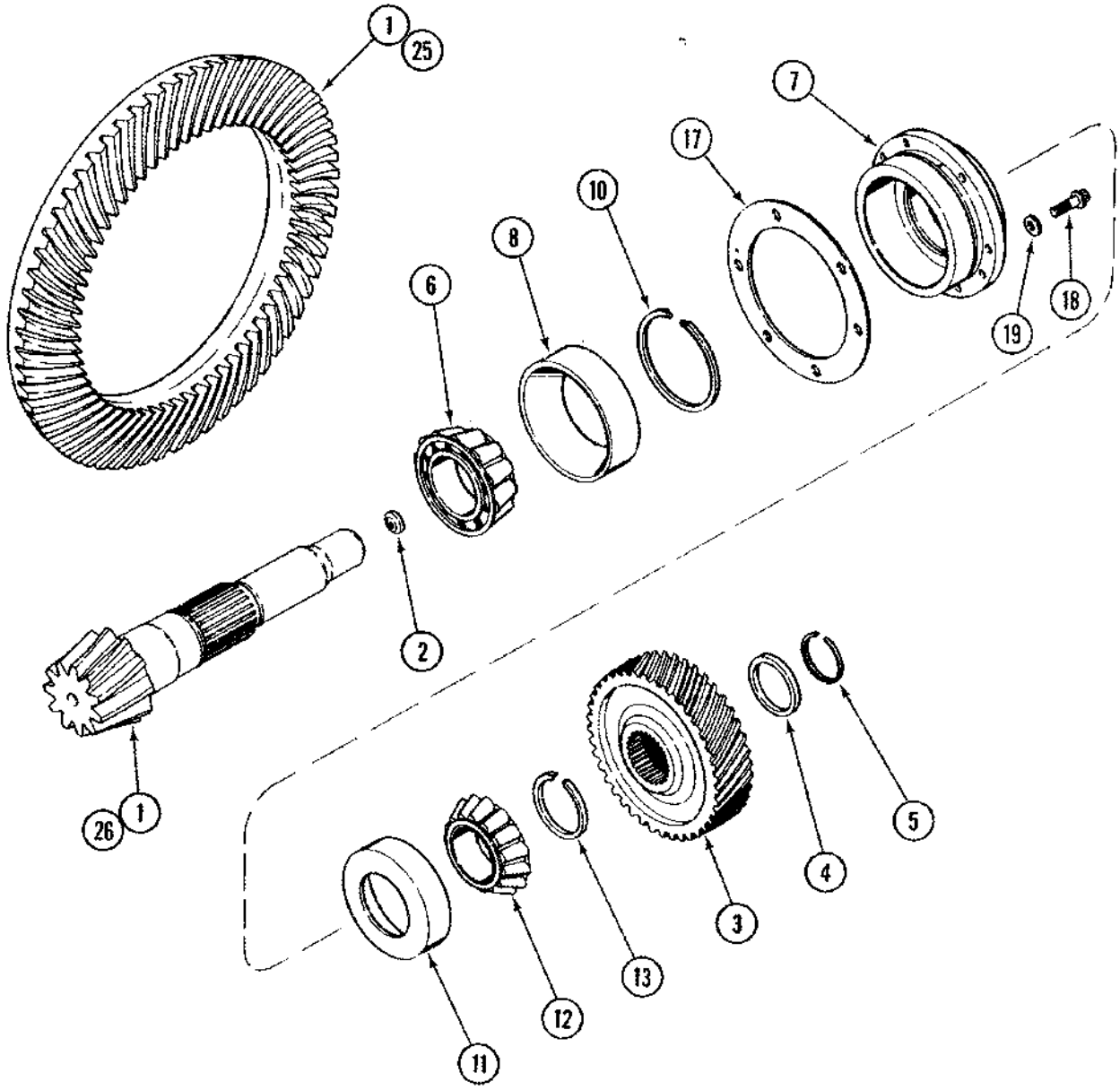

TRANSMISIÓN - ENGRANAJES Y EJE DEL PIÑÓN
TRANSMISSÃO - EIXO DO PINHÃO E ENGRENAGENS
TRANSMISSIE - PIGNONAS EN TANDWIELEN
TRANSMISSION - DREVAKSEL OG GEAR

R	N	P.N.	MOD	Q	Description Denominacion	Descrizione Denominação	Description Beschrijving	Bezeichnung Beskrivelse	L.C.
1	1, 2, 3	94616C2		1	GEAR SET Inc. 2 JUEGO DE PIÑONES	COPPIA DI INGRANAGGI JUEGO DE PIÑONES	JEU DE PIGNONS TANDWIELSET	ZAHNRADSATZ TANDHJULSSAET	286C
2		92825C1		1	PLUG TAPÓN	TAPPO BUJÃO	BOUCHON PLUG	STOPFEN PROP	050T
3		1285991C2		1	PINION 46T PINON	PIGNONE PINHAO	PIGNON PINION	RITZEL PINION	P045
4		1286039C1		1	SPACER SEPARADOR	DISTANZIALE ESPACADOR	ENTRETOISE AFSTANDSRING	DISTANZSTÜCK AFSTANDSSTYKKE	075D
5		143906C1		1	RING, SNAP ANILLO DE RESORTE	ANELLO ELASTICO ANEL	ANNEAU D'ARRÊT RING, SNAP	SICHERUNGSRING LÅSERING	054A
6	1, 2, 3	921684C1		1	BEARING, CONE CONO	CONO DEL CUSCINETTO CONE	CONE DE ROULEMENT KEGEL	LAGERKONUS LEJEKONUS	237C
6	4	251941A1		1	BEARING, CONE CONO	CONO DEL CUSCINETTO CONE	CONE DE ROULEMENT KEGEL	LAGERKONUS LEJEKONUS	237C
7	1, 2, 4	1068264C1		1	CAGE Inc. 8 JAULA	GABBIA GAIOLA	CAGE CAGE	KÄFIG KUGLEHOLDER	1270
7	4	253132A1		1	CAGE Inc. 8 JAULA	GABBIA GAIOLA	CAGE CAGE	KÄFIG KUGLEHOLDER	1270
8	1, 2, 3	921683C1		1	BEARING, CUP PISTA DE RODAMIENTO	ANELLO CUSCINETTO ANILHA ROLAMENTO	CUVETTE ROULEMENT LAGER, CUP	LAGERSCHALE LEJERING	062A
8	4	251942A1		1	BEARING, CUP PISTA DE RODAMIENTO	ANELLO CUSCINETTO ANILHA ROLAMENTO	CUVETTE ROULEMENT LAGER, CUP	LAGERSCHALE LEJERING	062A
10		120965C1		1	RING, SNAP ANILLO DE RESORTE	ANELLO ELASTICO ANEL	ANNEAU D'ARRÊT RING, SNAP	SICHERUNGSRING LÅSERING	054A
11		108326H		1	BEARING, CUP PISTA DE RODAMIENTO	ANELLO CUSCINETTO ANILHA ROLAMENTO	CUVETTE ROULEMENT LAGER, CUP	LAGERSCHALE LEJERING	062A
12		94666C1		1	BEARING, CONE CONO	CONO DEL CUSCINETTO CONE	CONE DE ROULEMENT KEGEL	LAGERKONUS LEJEKONUS	237C
13		131432A1		1	RING 3,62 mm ANILLO	ANELLO ANEL	ANNEAU RING	RING RING	045A
13		94661C1		1	RING 3,70 mm ANILLO	ANELLO ANEL	ANNEAU RING	RING RING	045A
13		94662C1		1	RING 3,78 mm ANILLO	ANELLO ANEL	ANNEAU RING	RING RING	045A
13		94663C1		1	RING 3,86 mm ANILLO	ANELLO ANEL	ANNEAU RING	RING RING	045A
13		110042C1		1	RING 3,93 mm ANILLO	ANELLO ANEL	ANNEAU RING	RING RING	045A
13		94664C1		1	RING 4,02 mm ANILLO	ANELLO ANEL	ANNEAU RING	RING RING	045A
13		131433A1		1	RING 4,10 mm ANILLO	ANELLO ANEL	ANNEAU RING	RING RING	045A
13		131434A1		1	RING 4,18 mm ANILLO	ANELLO ANEL	ANNEAU RING	RING RING	045A

(1) MX210
(2) MX230
(3) MX255
(4) MX285

TRANSMISSION - PINION SHAFT AND GEARS
TRASMISSIONE - ALBERO A PIGNONE E INGRANAGGI
TRANSMISSION - ARBRE DE TRANSMISSION ET ENTRAÎNEMENTS
GETRIEBE-RITZELWELLE UND ZAHNRÄDER

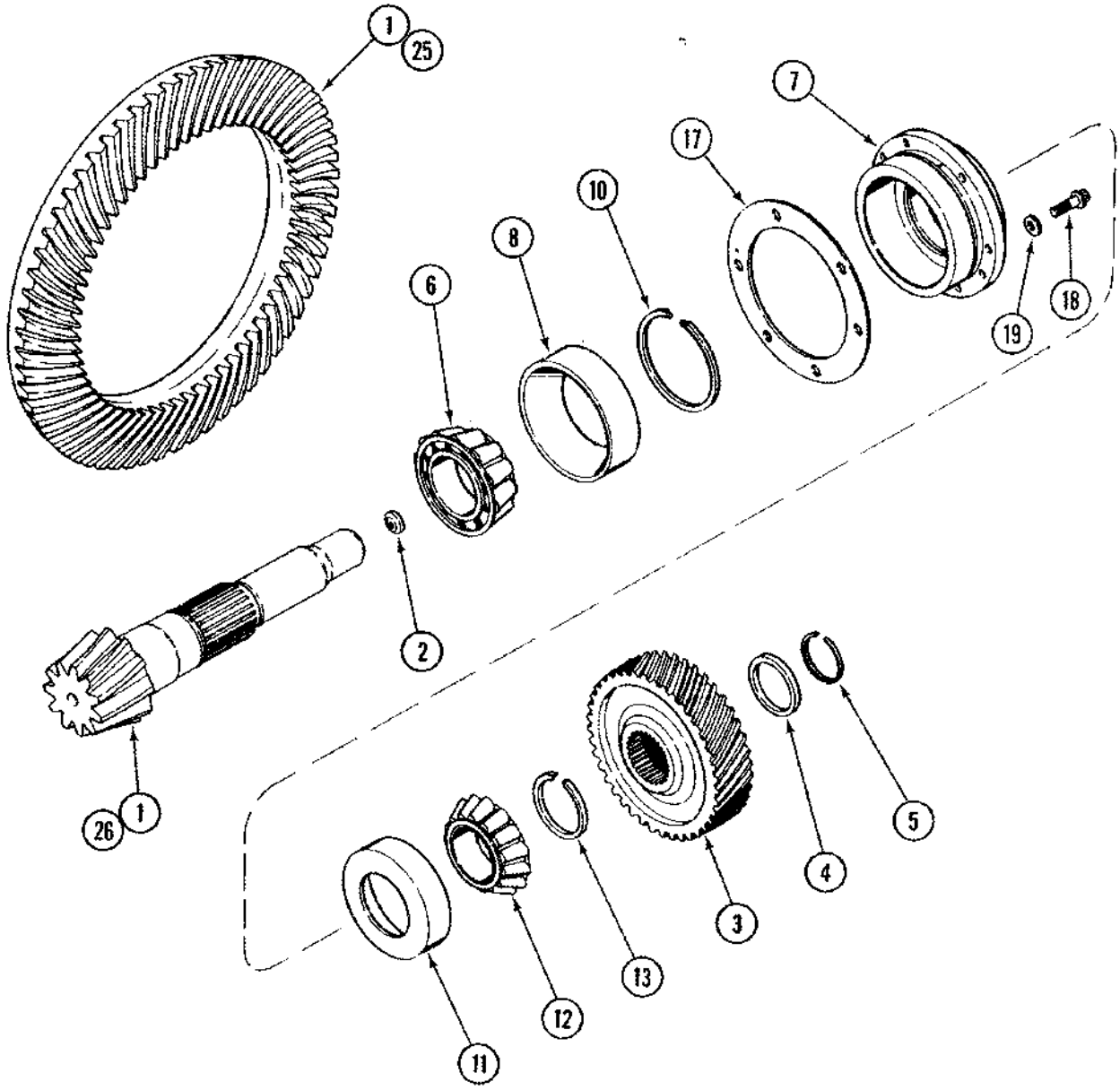

TRANSMISIÓN - ENGRANAJES Y EJE DEL PIÑÓN
TRANSMISSÃO - EIXO DO PINHÃO E ENGRENAGENS
TRANSMISSIE - PIGNONAS EN TANDWIELEN
TRANSMISSION - DREVAKSEL OG GEAR

R	N	P.N.	MOD	Q	Description Denominacion	Descrizione Denominação	Description Beschrijving	Bezeichnung Beskrivelse	L.C.
17		120977C1		2	SHIM 0,08 mm SUPLEMENTO	SPESSORE CALCO DE AFINACAO	CALE D'EPAISSEUR DIKTEPLAAT	EINSTELLSCHEIBCHEN MELLEMLAEG	198S
17		120978C1		2	SHIM 0,10 mm SUPLEMENTO	SPESSORE CALCO DE AFINACAO	CALE D'EPAISSEUR DIKTEPLAAT	EINSTELLSCHEIBCHEN MELLEMLAEG	198S
17		120979C1		2	SHIM 0,13 mm SUPLEMENTO	SPESSORE CALCO DE AFINACAO	CALE D'EPAISSEUR DIKTEPLAAT	EINSTELLSCHEIBCHEN MELLEMLAEG	198S
17		120980C1		2	SHIM 0,30 mm SUPLEMENTO	SPESSORE CALCO DE AFINACAO	CALE D'EPAISSEUR DIKTEPLAAT	EINSTELLSCHEIBCHEN MELLEMLAEG	198S
18		566-12035		6	SCREW M12 x 35; 12,9 TORNILLO	VITE PARAFUSO	VIS SCHROEF	SCHRAUBE SKRUE	7450
19		1251958C1		6	WASHER ARANDELA	ROSETTA PIANA ANILHA	RONDELLE SLUITRING	BEILAGSCHEIBE FLADSKIVE	131R
25	1	224870A1		1	RING, FLYWHEEL CORONA	ANELLO, INGRANAGGIO CREMALHEIRA	COURONNE DENTEE EX RING, FLYWHEEL	ZAHNKRANZ RING, FLYWHEEL	Z284
26	1	277610A1		1	PINION, BEVEL Inc. 2 PINON CONICO	PIGNONE CONICO PINHAO CONICO	PIGNON CONIQUE KONISCH TANDWIEL	KEGELRITZEL SPIDSHJUL	123P

(1) MX285

TRANSMISSION - DIFFERENTIAL
TRASMISSIONE - DIFFERENZIALE
TRANSMISSION - DIFFÉRENTIEL
TRANSMISSION - DIFFÉRENTIEL

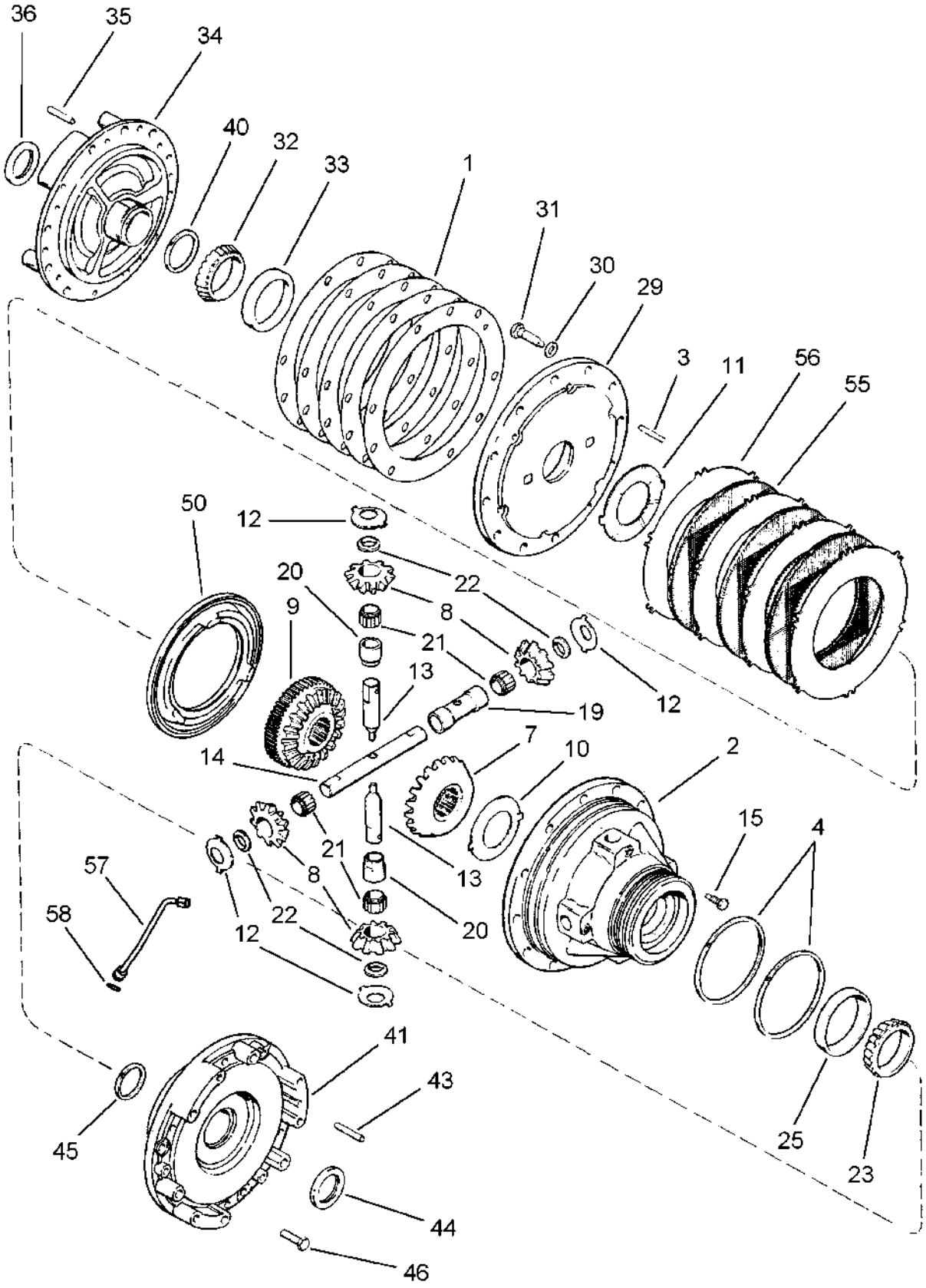

TRANSMISIÓN - DIFERENCIAL
TRANSMISSÃO - DIFERENCIAL
TRANSMISSIE - DIFFERENTIEEL
TRANSMISSION - DIFFERENTIALE

R	N	P.N.	MOD	Q	Description Denominacion	Descrizione Denominação	Description Beschrijving	Bezeichnung Beskrivelse	L.C.
1		120513C2		AR	SHIM 0,09 mm SUPLEMENTO	SPESSORE CALCO DE AFINACAO	CALE D'EPAISSEUR DIKTEPLAAT	EINSTELLSCHEIBCHEN MELLEMLAEG	198S
1		120512C2		AR	SHIM 0,10 mm SUPLEMENTO	SPESSORE CALCO DE AFINACAO	CALE D'EPAISSEUR DIKTEPLAAT	EINSTELLSCHEIBCHEN MELLEMLAEG	198S
1		120509C2		AR	SHIM 0,18 mm SUPLEMENTO	SPESSORE CALCO DE AFINACAO	CALE D'EPAISSEUR DIKTEPLAAT	EINSTELLSCHEIBCHEN MELLEMLAEG	198S
1		120510C2		AR	SHIM 0,31 mm SUPLEMENTO	SPESSORE CALCO DE AFINACAO	CALE D'EPAISSEUR DIKTEPLAAT	EINSTELLSCHEIBCHEN MELLEMLAEG	198S
1		120511C2		AR	SHIM 0,74 mm SUPLEMENTO	SPESSORE CALCO DE AFINACAO	CALE D'EPAISSEUR DIKTEPLAAT	EINSTELLSCHEIBCHEN MELLEMLAEG	198S
2		229594A1		1	CAGE JAULA	GABBIA GAIOLA	CAGE CAGE	KÄFIG KUGLEHOLDER	1270
3		137023A1		6	DOWEL 10 x 60 mm PITON	GRANO GUIA	PION STEL PEN	ZENTRIERSTIFT DYVEL	090G
4		148939C1		2	SEAL ANILLO DE CIERRE	ANELLO DI TENUTA ANEL DE VEDACAO	JOINT DICHTINGSRING	DICHTUNG PAKNINGSRING	132A
7		1259633C3		1	GEAR ENGRANAJE	INGRANAGGIO CARRETO	PIGNON TANDWIEL	ZAHNRAD TANDHJUL	050I
8		92905C1		4	PINION 10T PINON	PIGNONE PINHAO	PIGNON PINION	RITZEL PINION	P045
9		1259634C3		1	PINION PINON	PIGNONE PINHAO	PIGNON PINION	RITZEL PINION	P045
10		227116A2		1	WASHER, THRUST ARANDELA DE TOPE	RONDELLA, DI SPINTA ANILHA DE ENCOSTO	RONDELLE DE BUTÉE SLUITRING DRUKPLAAT	DRUCKSCHEIBE TRYKSKIVE	023R
11		227117A2		1	WASHER, THRUST ARANDELA DE TOPE	RONDELLA, DI SPINTA ANILHA DE ENCOSTO	RONDELLE DE BUTÉE SLUITRING DRUKPLAAT	DRUCKSCHEIBE TRYKSKIVE	023R
12		92718C2		4	WASHER ARANDELA	ROSETTA PIANA ANILHA	RONDELLE SLUITRING	BEILAGSCHEIBE FLADSKIVE	131R
13		92906C1		2	SHAFT, SHORT ARBOL CORTO	ALBERO, CORTO EIXO CURTO	ARBRE COURT SHAFT, SHORT	WELLE, KURZ KORT AKSEL	P682
14		92907C1		1	SHAFT EJE	ALBERO VEIO	ARBRE AS	WELLE AKSEL	016A
15		1997421C1		2	BOLT TORNILLO	BULLONE PARAFUSO	BOULON BOUT	SCHAUBENBOLZEN SKRUE	140B
19		1289349C1		1	SPACER SEPARADOR	DISTANZIALE ESPACADOR	ENTRETOISE AFSTANDSRING	DISTANZSTÜCK AFSTANDSSTYKKE	075D
20		1289350C1		2	SPACER SEPARADOR	DISTANZIALE ESPACADOR	ENTRETOISE AFSTANDSRING	DISTANZSTÜCK AFSTANDSSTYKKE	075D
21		1270697C1		112	NEEDLE 28 Per Gear AGUJA	AGO AGULHA	AIGUILLE NAALD	NADEL NÅL	542A
22		1289348C1		4	RING ANILLO	ANELLO ANEL	ANNEAU RING	RING RING	045A
23		622336C1		1	BEARING, CONE CONO	CONO DEL CUSCINETTO CONE	CONE DE ROULEMENT KEGEL	LAGERKONUS LEJEKONUS	237C
25		A63171		1	BEARING, CUP PISTA DE RODAMIENTO	ANELLO CUSCINETTO ANILHA ROLAMENTO	CUVETTE ROULEMENT LAGER, CUP	LAGERSCHALE LEJERING	062A
29		229593A1		1	COVER TAPADERA	COPERCHIO COBERTA	COUVERCLE DEKSEL	DECKEL DÆKSEL	265C

TRANSMISSION - DIFFERENTIAL
TRASMISSIONE - DIFFERENZIALE
TRANSMISSION - DIFFÉRENTIEL
TRANSMISSION - DIFFÉRENTIEL

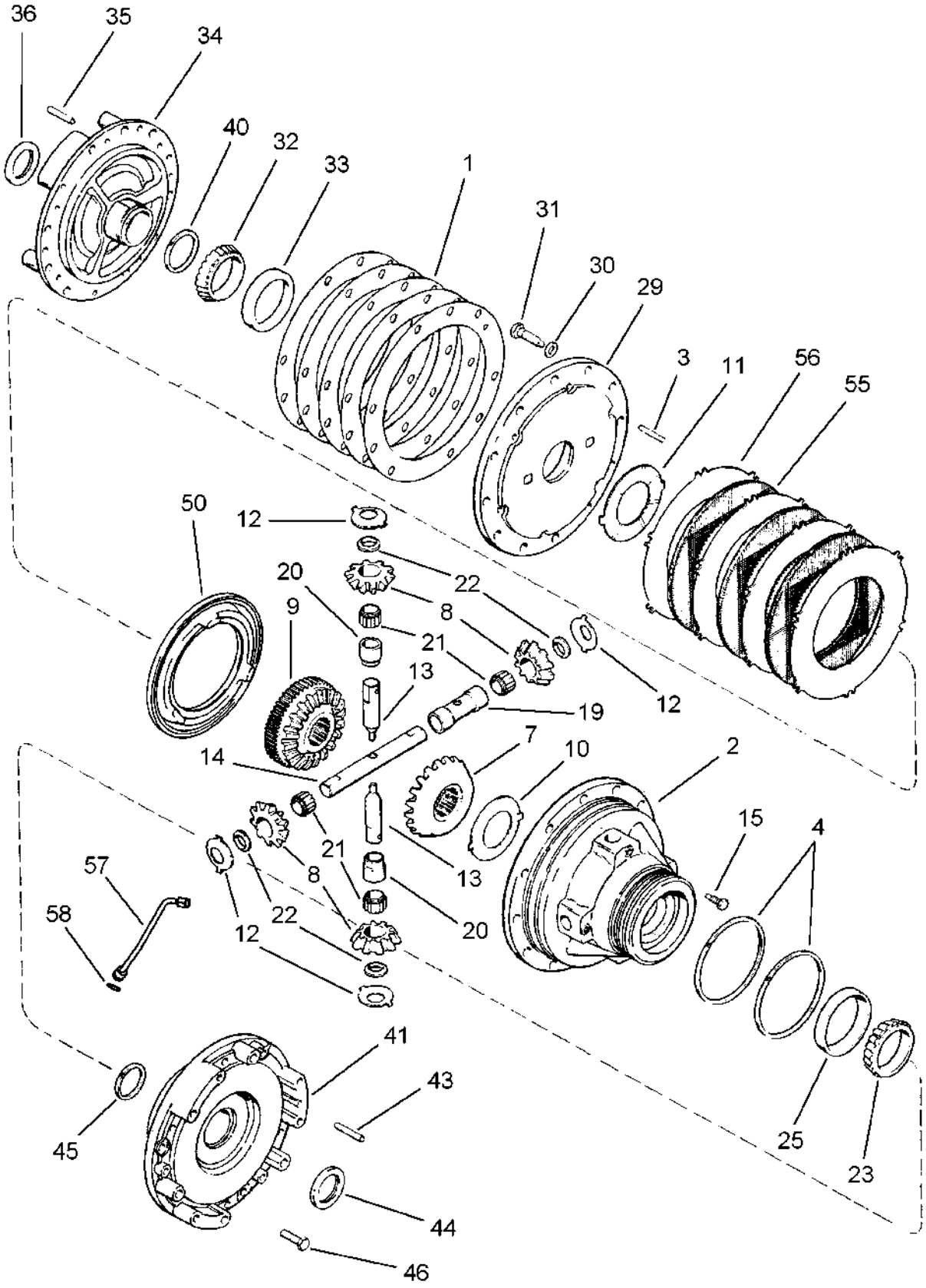

TRANSMISIÓN - DIFERENCIAL
TRANSMISSÃO - DIFERENCIAL
TRANSMISSIE - DIFFERENTIEEL
TRANSMISSION - DIFFERENTIALE

R	N	P.N.	MOD	Q	Description Denominacion	Descrizione Denominação	Description Beschrijving	Bezeichnung Beskrivelse	L.C.
30		896-11016		12	WASHER 17,5 x 30 x 4 mm ARANDELA	ROSETTA PIANA ANILHA	RONDELLE SLUITRING	SCHEIBE FLADSKIVE	9720
31		828-16055		12	SCREW M16 x 55; 10.9 TORNILLO	VITE PARAFUSO	VIS SCHROEF	SCHRAUBE SKRUE	7450
32		67250C1		1	BEARING, BALL RODAMIENTO DE BOLAS	CUSCINETTO A SFERA ROLAMENTO	ROULEMENT A BILLES LAGER, KOGEL	KUGELLAGER KUGLELEJE	343C
33		67251C1		1	BEARING, CUP PISTA DE RODAMIENTO	ANELLO CUSCINETTO ANILHA ROLAMENTO	CUVETTE ROULEMENT LAGER, CUP	LAGERSCHALE LEJERING	062A
34		120503C2		1	RETAINER RETENEDOR	RITEGNO RETENTOR	RETENEUR HOUDER	HALTEVORRICHTUNG HOLDER	109R
35		136433A1		5	DOWEL 12 x 65 mm PITON	GRANO GUIA	PION STEL PEN	ZENTRIERSTIFT DYVEL	090G
36		139059C1		1	SEAL ANILLO DE CIERRE	ANELLO DI TENUTA ANEL DE VEDACAO	JOINT DICHTINGSRING	DICHTUNG PAKNINGSRING	132A
40		139060C2		2	RING ANILLO	ANELLO ANEL	ANNEAU RING	RING RING	045A
41		1997369C1		1	RETAINER RETENEDOR	RITEGNO RETENTOR	RETENEUR HOUDER	HALTEVORRICHTUNG HOLDER	109R
43		136433A1		5	DOWEL 12 x 65 mm PITON	GRANO GUIA	PION STEL PEN	ZENTRIERSTIFT DYVEL	090G
44		139059C1		1	SEAL ANILLO DE CIERRE	ANELLO DI TENUTA ANEL DE VEDACAO	JOINT DICHTINGSRING	DICHTUNG PAKNINGSRING	132A
45		139060C2		1	RING ANILLO	ANELLO ANEL	ANNEAU RING	RING RING	045A
46		613-16040		3	SCREW M16 x 40 TORNILLO	VITE PARAFUSO	VIS SCHROEF	SCHRAUBE SKRUE	7450
46		613-16045		3	SCREW M16 x 45 TORNILLO	VITE PARAFUSO	VIS SCHROEF	SCHRAUBE SKRUE	7450
50		1997422C1		1	PISTON EMBOLO	STANTUFFO PISTAO	PISTON ZUIGER	KOLBEN STEMPEL	235S
55		120679C1		3	PLATE PLACA	PIASTRA CHAPA	PLAQUE PLAAT	PLATTE PLADE	105P
56		92915C1		4	PLATE PLACA	PIASTRA CHAPA	PLAQUE PLAAT	PLATTE PLADE	105P
57		409738A1		1	TUBE TUBO	TUBETTO TUBO	TUBE BUISJE	SCHLAUCH RØR	195T
58		238-5115		1	O-RING 11/16 ID x 3/32 JUNTA HERMETICA	ANELLO TOROIDALE ANEL O	JOINT TORIQUE O-RING	O-RING O-RING	7176

RANGE TRANSMISSION - MFD CLUTCH
CAMBIO GAMMA - FRIZIONE MFD
BOÎTE DE GAMMES - EMBRAYAGE DE PONT AVANT
ALLRADKUPPLUNG FÜR GRUPPENGETRIEBE

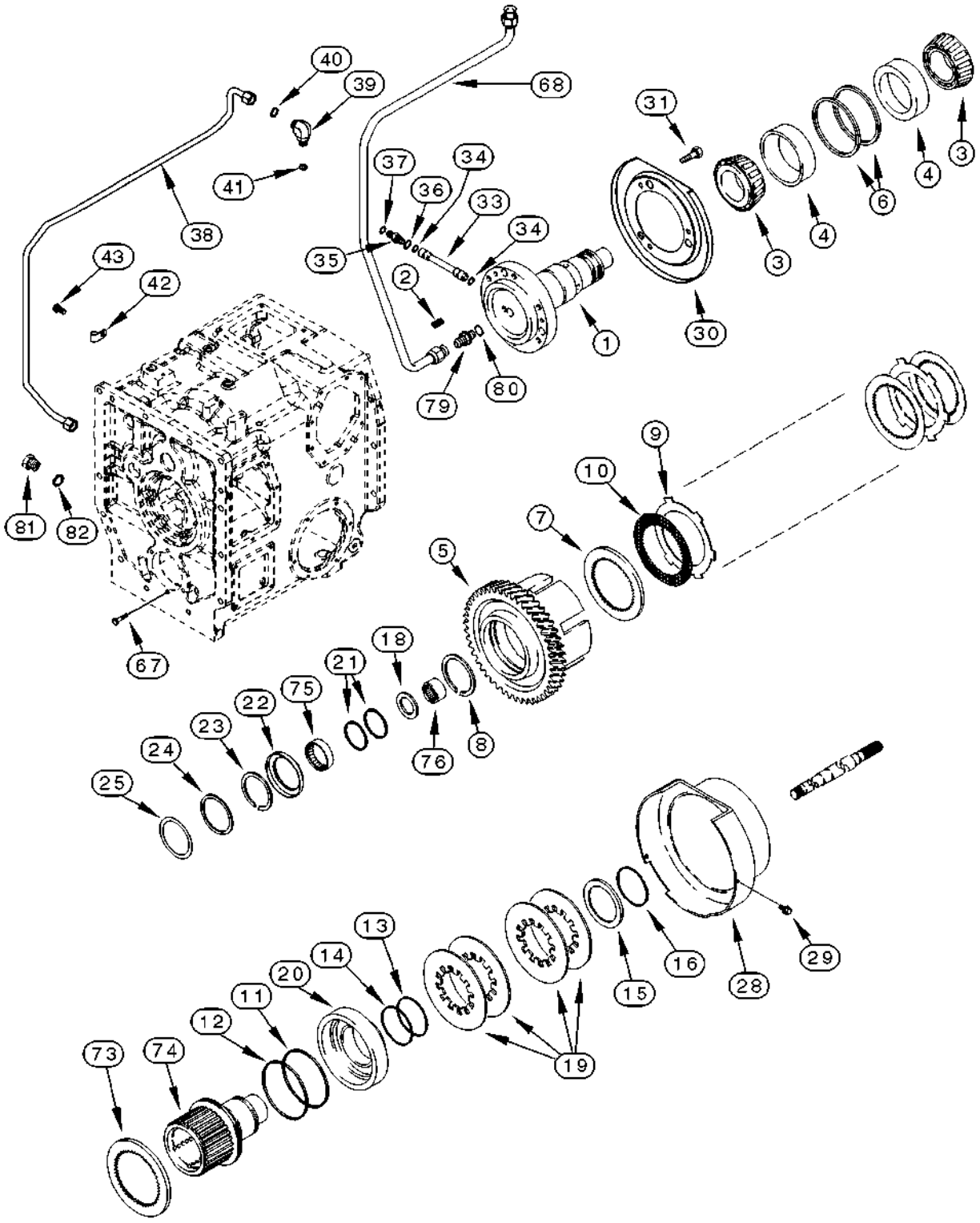

TRANSMISIÓN DE RANGO - EMBRAGUE DE LA TDM
TRANSMISSÃO DAS RELAÇÕES DE VELOCIDADE - EMBRAIAGEM DA TMD
GROEPSTRANSMISSIE - MFD-KOPPELING
OMRÅDETRANSMISSION - MFD KOBLING

R	N	P.N.	MOD	Q	Description Denominacion	Descrizione Denominação	Description Beschrijving	Bezeichnung Beskrivelse	L.C.
1		199320A1		1	SHAFT EJE	ALBERO VEIO	ARBRE AS	WELLE AKSEL	016A
2		877-11010		1	SCREW M10 x 10 TORNILLO	VITE PARAFUSO	VIS SCHROEF	SCHRAUBE SKRUE	7450
3		630694C1		2	BEARING, CONE CONO	CONO DEL CUSCINETTO CONE	CONE DE ROULEMENT KEGEL	LAGERKONUS LEJEKONUS	237C
4		630695C1		2	BEARING, CUP PISTA DE RODAMIENTO	ANELLO CUSCINETTO ANILHA ROLAMENTO	CUVETTE ROULEMENT LAGER, CUP	LAGERSCHALE LEJERING	062A
5		222856A1		1	PINION PINON	PIGNONE PINHAO	PIGNON PINION	RITZEL PINION	P045
6		101-21412		2	RING, SNAP No. 412 ANILLO DE RESORTE	ANELLO ELASTICO ANEL	ANNEAU D'ARRÊT RING, SNAP	SICHERUNGSRING LÅSERING	054A
7		128297A1		1	DISC, CLUTCH DISCO (CONJUNTO)	DISCO, FRIZIONE DISCO CONJUNTO	DISQUE-D'EMBRAYAGE DISC, CLUTCH	KUPPLUNGSCHEIBE DISC, CLUTCH	P485
8		101-11400		1	CIRCLIP No. 400 RETENEDOR	ANELLO DI RITEGNO FREIO DE MOLA	CIRCLIP BOORGVEER	HALTERING LÃSERING	P019
9	1, 2	128114A1		12	DISC DISCO	DISCO DISCO	DISQUE SCHIJF	SCHEIBE NAV	060D
9	3, 4	128114A1		15	DISC DISCO	DISCO DISCO	DISQUE SCHIJF	SCHEIBE NAV	060D
10	1, 2	1997907C1		13	PLATE PLACA	PIASTRA CHAPA	PLAQUE PLAAT	PLATTE PLADE	105P
10	3, 4	1997907C1		16	PLATE PLACA	PIASTRA CHAPA	PLAQUE PLAAT	PLATTE PLADE	105P
11		92562C1		1	RING ANILLO	ANELLO ANEL	ANNEAU RING	RING RING	045A
12		93138C1		1	O-RING JUNTA HERMETICA	ANELLO TOROIDALE O-RING	JOINT THORIQUE O-RING	DICHTRING O-RING	055A
13		1997879C1		1	SEAL ANILLO DE CIERRE	ANELLO DI TENUTA ANEL DE VEDACAO	JOINT DICHTINGSRING	DICHTUNG PAKNINGSRING	132A
14		238-7037		1	O-RING 2-1/2 ID x 1/16 JUNTA HERMETICA	ANELLO TOROIDALE O-RING	JOINT THORIQUE O-RING	DICHTRING O-RING	055A
15		123135A1		1	WASHER ARANDELA	ROSETTA PIANA ANILHA	RONDELLE SLUITRING	BEILAGSCHEIBE FLADSKIVE	131R
16		123517A1		1	SNAP RING ANILLO DE CIERRE	ANELLO ELASTICO ANEL TRAVA	ANNEAU-D'ARRET SNAP RING	SICHERUNGSRING SNAP RING	P345
18		121192A1		1	WASHER, THRUST ARANDELA DE TOPE	RONDELLA, DI SPINTA ANILHA DE ENCOSTO	RONDELLE DE BUTÉE SLUITRING DRUKPLAAT	DRUCKSCHEIBE TRYKSKIVE	023R
19	1, 2	1997880C1		4	SPRING, BELLEVILLE RESORTE LISO	MOLLA, BELLEVILLE MOLA	RESSORT BELLEVILLE SPRING, BELLEVILLE	TELLERFEDER BELLEVILLEFJEDER	P825
19	3, 4	1997880C1		6	SPRING, BELLEVILLE RESORTE LISO	MOLLA, BELLEVILLE MOLA	RESSORT BELLEVILLE SPRING, BELLEVILLE	TELLERFEDER BELLEVILLEFJEDER	P825
20	1, 2	231935A2		1	PISTON EMBOLO	STANTUFFO PISTAO	PISTON ZUIGER	KOLBEN STEMPEL	235S

(1) MX210
(2) MX230
(3) MX255
(4) MX285

RANGE TRANSMISSION - MFD CLUTCH
CAMBIO GAMMA - FRIZIONE MFD
BOÎTE DE GAMMES - EMBRAYAGE DE PONT AVANT
ALLRADKUPPLUNG FÜR GRUPPENGETRIEBE

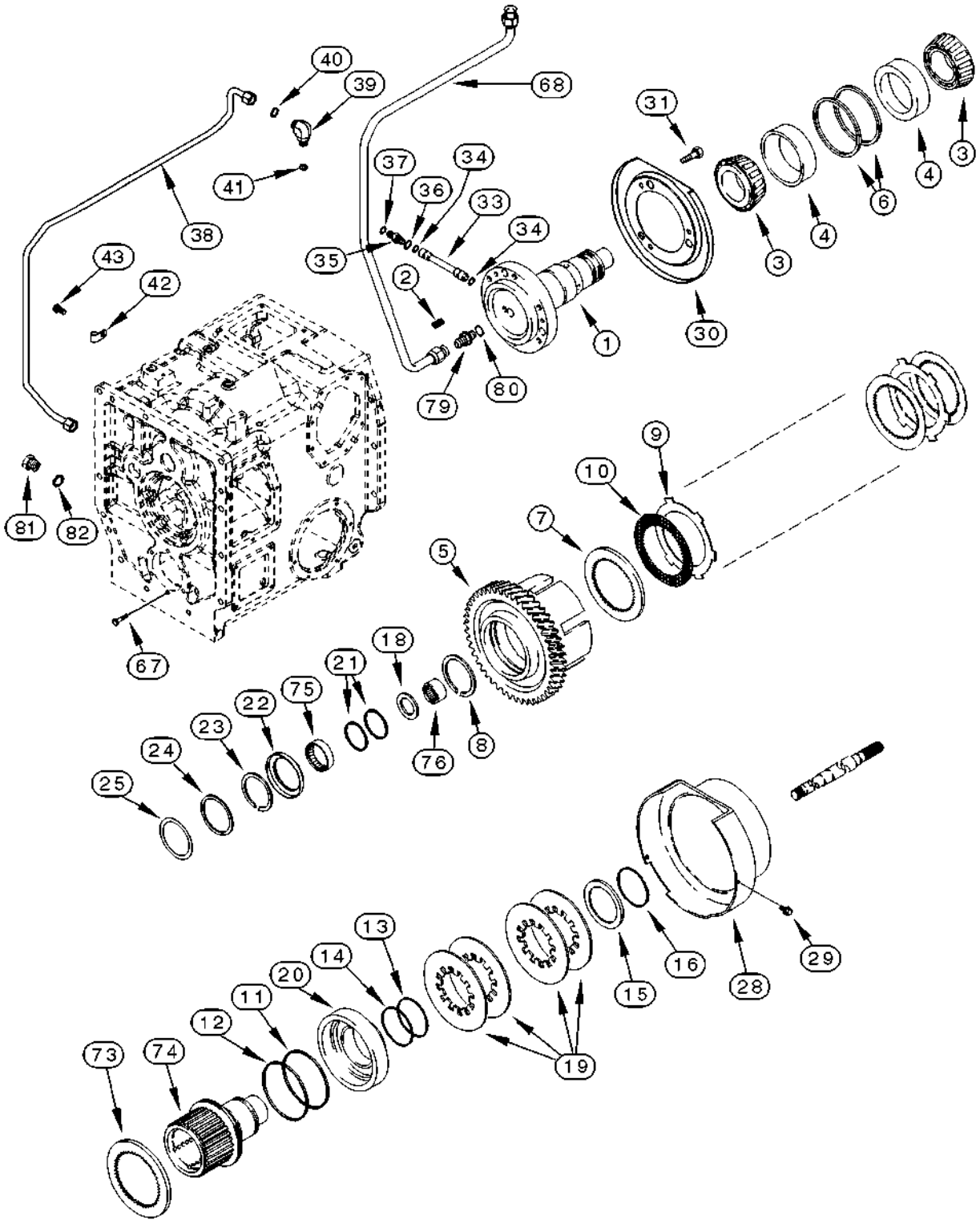

TRANSMISIÓN DE RANGO - EMBRAGUE DE LA TDM
TRANSMISSÃO DAS RELAÇÕES DE VELOCIDADE - EMBRAIAGEM DA TMD
GROEPSTRANSMISSIE - MFD-KOPPELING
OMRÅDETRANSMISSION - MFD KOBLING

R	N	P.N.	MOD	Q	Description Denominacion	Descrizione Denominação	Description Beschrijving	Bezeichnung Beskrivelse	L.C.
20	1, 2	231936A2		1	PISTON EMBOLO	STANTUFFO PISTAO	PISTON ZUIGER	KOLBEN STEMPEL	235S
21		1286024C1		2	RING ANILLO	ANELLO ANEL	ANNEAU RING	RING RING	045A
22		1997885C1		1	SEAL, OIL JUNTA DE ACEITE	PARAOLIO VEDADOR DE OLEO	JOINT D'HUILE OIL-SEAL	ÖLDICHTUNG OLIESEGL	P278
23		1997891C1		1	RING, SNAP ANILLO DE RESORTE	ANELLO ELASTICO ANEL	ANNEAU D'ARRÊT RING, SNAP	SICHERUNGSRING LÅSERING	054A
24		1277309C1		1	WASHER ARANDELA	ROSETTA PIANA ANILHA	RONDELLE SLUITRING	BEILAGSCHEIBE FLADSKIVE	131R
25		138121A1		AR	SHIM 0,20 mm SUPLEMENTO	SPESSORE CALCO DE AFINACAO	CALE D'EPAISSEUR DIKTEPLAAT	EINSTELLSCHEIBCHEN MELLEMLAEG	198S
25		1997893C1		AR	SHIM 0,51 mm SUPLEMENTO	SPESSORE CALCO DE AFINACAO	CALE D'EPAISSEUR DIKTEPLAAT	EINSTELLSCHEIBCHEN MELLEMLAEG	198S
25		1997894C1		AR	SHIM 0,56 mm SUPLEMENTO	SPESSORE CALCO DE AFINACAO	CALE D'EPAISSEUR DIKTEPLAAT	EINSTELLSCHEIBCHEN MELLEMLAEG	198S
25		1997895C1		AR	SHIM 0,64 mm SUPLEMENTO	SPESSORE CALCO DE AFINACAO	CALE D'EPAISSEUR DIKTEPLAAT	EINSTELLSCHEIBCHEN MELLEMLAEG	198S
28		117853A1		1	HOUSING CAVIDAD	ALLOGGIAMENTO ALOJAMENTO	CARTER HUIS	GEHÄUSE HUS	014V
29		782-84413		3	SCREW M4,8 X 13 TORNILLO	VITE PARAFUSO	VIS SCHROEF	SCHRAUBE SKRUE	7450
30		1997881C1		1	SHIELD PROTECCION	PROTEZIONE PROTECCAO	PROTECTION AFSCHERMING	SCHUTZ BESKYTTELSESKÆRM	224P
31		806-8016		3	SCREW M8 x 16; 10.9 TORNILLO	VITE PARAFUSO	VIS SCHROEF	SCHRAUBE SKRUE	7450
33		93201C1		1	TUBE TUBO	TUBETTO TUBO	TUBE BUISJE	SCHLAUCH RØR	195T
34		238-5013		2	O-RING 7/16 ID x 1/16 JUNTA HERMETICA	ANELLO TOROIDALE ANEL O	JOINT TORIQUE O-RING	O-RING O-RING	7176
35		201-102		1	ADAPTER 13/16 fc sl x 3/4 Or, Inc. 36, 37 ADAPTOR	ADATTATORE ADAPTADOR	ADAPTEUR VERLOOPSTUK	ADAPTER ADAPTER	0031
36		237-6008		1	O-RING 41/64 ID x 3/32 JUNTA HERMETICA	ANELLO TOROIDALE O-RING	JOINT THORIQUE O-RING	DICHTRING O-RING	055A
37		238-6014		1	O-RING 1/2 ID x 1/16 JUNTA HERMETICA	ANELLO TOROIDALE ANEL O	JOINT TORIQUE O-RING	O-RING O-RING	7176
38		258154A3		1	TUBE TUBO	TUBETTO TUBO	TUBE BUISJE	SCHLAUCH RØR	195T
39		700-305		1	ELBOW 13/16 fc sl x 18 Or, Inc. 40 - 41 CODO	GOMITO JOELHO	COUDE ELLEBOOG	KNIESTÜCK VINKELRØR	2940
40		637-63153		1	O-RING 15,3 ID x 2,2 JUNTA HERMETICA	ANELLO TOROIDALE O-RING	JOINT THORIQUE O-RING	DICHTRING O-RING	055A
41		238-6014		1	O-RING 1/2 ID x 1/16 JUNTA HERMETICA	ANELLO TOROIDALE ANEL O	JOINT TORIQUE O-RING	O-RING O-RING	7176

(1) MX255
(2) MX285

RANGE TRANSMISSION - MFD CLUTCH
CAMBIO GAMMA - FRIZIONE MFD
BOÎTE DE GAMMES - EMBRAYAGE DE PONT AVANT
ALLRADKUPPLUNG FÜR GRUPPENGETRIEBE

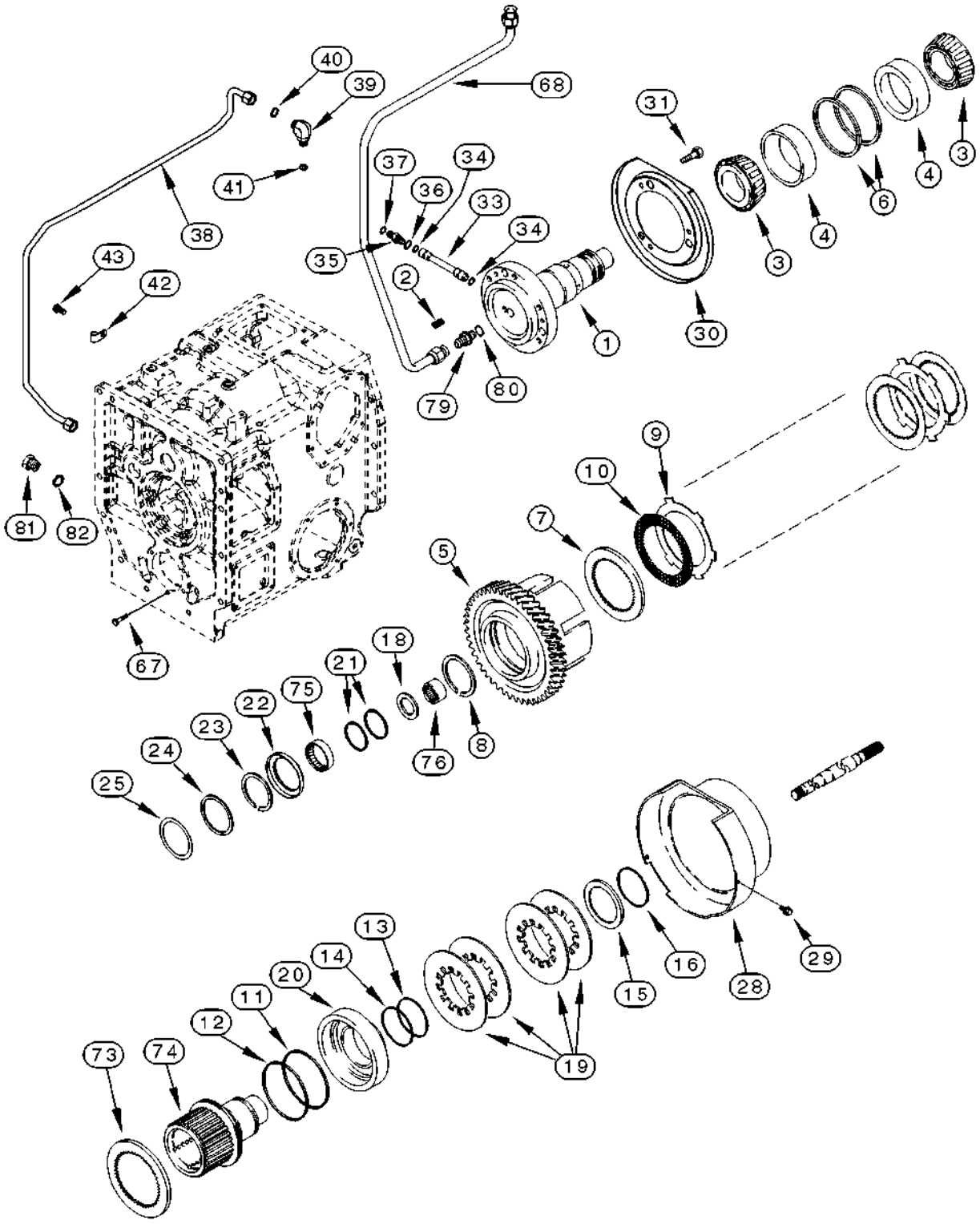

TRANSMISIÓN DE RANGO - EMBRAGUE DE LA TDM
TRANSMISSÃO DAS RELAÇÕES DE VELOCIDADE - EMBRAIAGEM DA TMD
GROEPSTRANSMISSIE - MFD-KOPPELING
OMRÅDETRANSMISSION - MFD KOBLING

R	N	P.N.	MOD	Q	Description Denominacion	Descrizione Denominação	Description Beschrijving	Bezeichnung Beskrivelse	L.C.
42		515-23127		1	CLAMP COLLAR	MORSETTO BRACADEIRA	COLLIER CLAMP	SCHELLE CLAMP	1640
43		614-10020		1	SCREW M10 x 20; 8,8 TORNILLO	VITE PARAFUSO	VIS SCHROEF	SCHRAUBE SKRUE	P136
67		814-10050		6	SCREW M10 x 50; 8 TORNILLO	VITE PARAFUSO	VIS SCHROEF	SCHRAUBE SKRUE	P136
68		124306A1		1	PIPE CUELLO DE CARGA	TUBO TUBO DE ENCHIMENTO	TUYAU OPVULPIJP	ROHR PAAFYLDNINGSSTUDS	200T
73		128297A1		1	DISC, CLUTCH DISCO (CONJUNTO)	DISCO, FRIZIONE DISCO CONJUNTO	DISQUE-D'EMBRAYAGE DISC, CLUTCH	KUPPLUNGSCHEIBE DISC, CLUTCH	P485
74		198519A3		1	HUB ASSY. Inc. 75, 76 MAZA (CONJUNTO)	MOZZO, COMPLESSIVO CUBO CONJUNTO	MOYEU (ASSEMBLE) HUB ASSY.	NABE (KPLT.) HUB ASSY.	P470
75		112822R91		1	BEARING COJINETE	CUSCINETTO ROLAMENTO	ROULEMENT BEARING	LAGER BEARING	0600
76		F19478		1	BEARING COJINETE	CUSCINETTO ROLAMENTO	ROULEMENT BEARING	LAGER BEARING	0600
79		218-5351		1	CONNECTOR, HYD. 3/4 fl x 9/16 Or, Inc. 80 RACOR	RACCORDO IDRAULICO CONECTOR	RACCORD VERBINDING	STUTZEN FORSKRUNING	020R
80		237-6006		1	O-RING 15/32 ID x 5/64 JUNTA HERMETICA	ANELLO TOROIDALE O-RING	JOINT THORIQUE O-RING	DICHTRING O-RING	055A
81	1	218-5156		1	PLUG 3/4 Or, Inc. 82 TAPÓN	TAPPO BUJÃO	BOUCHON PLUG	STOPFEN PROP	050T
82		237-6008		1	O-RING 41/64 ID x 3/32 JUNTA HERMETICA	ANELLO TOROIDALE O-RING	JOINT THORIQUE O-RING	DICHTRING O-RING	055A

(1) Without Mechanical Front Drive

06-24		p1	11/04

MFD AXLE - DRIVE SHAFT
ASSALE MFD - ALBERO MOTORE
ESSIEU DE PONT AVANT - ARBRE D'ENTRAÎNEMENT
ALLRADANTRIEBSACHSEN-ANTRIEBSWELLE

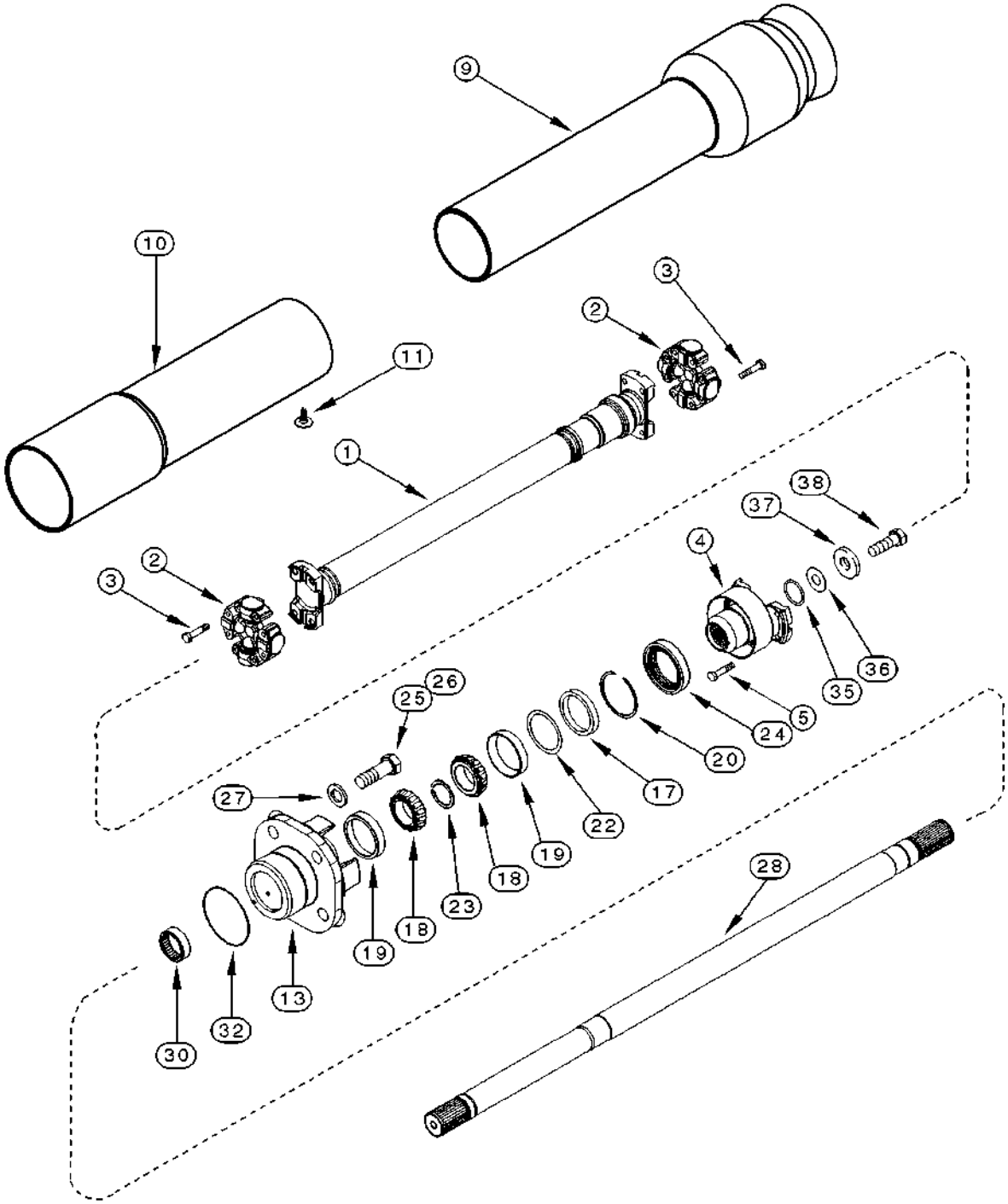

EJE DE LA TDM - EJE DE LA TRANSMISIÓN
EIXO DA TMD - EIXO DE TRANSMISSÃO
MFD-AS - AANDRIJFAS
MFD AKSEL - DRIVAKSEL

R	N	P.N.	MOD	Q	Description Denominacion	Descrizione Denominação	Description Beschrijving	Bezeichnung Beskrivelse	L.C.
1		258853A2		1	SHAFT, DRIVE Inc. 2, 3 ARBOL DE MANDO	ALBERO MOTORE EIXO COMANDO	ARBRE D'ENTRAINEMEN SHAFT, DRIVE	ANTRIEBSWELLE DRIVAKSEL	P754
2		258854A2		2	SPIDER, U-JOINT CRUCETA DE CARDÁN	STELLA CRUCETA DE CARDÁN	CROISILLON DE CARDA SPIDER, U-JOINT	KARDAN-KREUZSTÜCK U-DIFFERENTIALEKRYD	8165
3		828-10045		8	SCREW M10 x 45; 10.9 TORNILLO	VITE PARAFUSO	VIS SCHROEF	SCHRAUBE SKRUE	040V
4		258855A1		1	YOKE HORQUILLA	FORCELLA GARFO	MACHOIRE VORK	GABEL KRAFTOVERFOERINGSC	085F
5		828-10045		8	SCREW M10 x 45; 10.9 TORNILLO	VITE PARAFUSO	VIS SCHROEF	SCHRAUBE SKRUE	040V
		441554A2		1	SHIELD Inc. 9 - 10 PROTECCION	PROTEZIONE PROTECCAO	PROTECTION AFSCHERMING	SCHUTZ BESKYTTELSESKÆRM	224P
9		NSS		1	NOT SERVICED SEPARATELY Sleeve NO SE REPARA SEPARA	NON FORNITO SEPARAT NOT SERVICED SEPARA	NON FOURNI SEPAREMI NIET ALLEEN VERKRIJG	KEIN ERSATZTEIL NOT SERVICED SEPARA	064N
10		NSS		1	NOT SERVICED SEPARATELY Sleeve NO SE REPARA SEPARA	NON FORNITO SEPARAT NOT SERVICED SEPARA	NON FOURNI SEPAREMI NIET ALLEEN VERKRIJG	KEIN ERSATZTEIL NOT SERVICED SEPARA	064N
11		87400216		2	FASTENER BOTON DE RESORTE	BOTTONE A SCATTO PARAFUSO	ATTACHE DRUKKNOP	SCHALTKNOPF UDLOESERKNAP	123B
13		199922A2		1	CAGE JAULA	GABBIA GAIOLA	CAGE CAGE	KÄFIG KUGLEHOLDER	1270
17		199923A1		1	SPACER SEPARADOR	DISTANZIALE ESPACADOR	ENTRETOISE AFSTANDSRING	DISTANZSTÜCK AFSTANDSSTYKKE	075D
18		235519A1		2	BEARING, CONE CONO	CONO DEL CUSCINETTC CONE	CONE DE ROULEMENT KEGEL	LAGERKONUS LEJEKONUS	237C
19		663558R1		2	BEARING, CUP 2-57/64 OD PISTA DE RODAMIENTO	ANELLO CUSCINETTO ANILHA ROLAMENTO	CUVETTE ROULEMENT LAGER, CUP	LAGERSCHALE LEJERING	062A
20		199981A1		1	RING, SNAP ANILLO DE RESORTE	ANELLO ELASTICO ANEL	ANNEAU D'ARRÊT RING, SNAP	SICHERUNGSRING LÅSERING	054A
22		249528A1		AR	SHIM 0,203 mm SUPLEMENTO	SPESSORE CALCO DE AFINACAO	CALE D'EPAISSEUR DIKTEPLAAT	EINSTELLSCHEIBCHEN MELLEMLAEG	198S
22		199929A1		AR	SHIM 0,356 mm SUPLEMENTO	SPESSORE CALCO DE AFINACAO	CALE D'EPAISSEUR DIKTEPLAAT	EINSTELLSCHEIBCHEN MELLEMLAEG	198S
22		199928A1		AR	SHIM 0,508 mm SUPLEMENTO	SPESSORE CALCO DE AFINACAO	CALE D'EPAISSEUR DIKTEPLAAT	EINSTELLSCHEIBCHEN MELLEMLAEG	198S
22		199927A1		AR	SHIM 0,559 mm SUPLEMENTO	SPESSORE CALCO DE AFINACAO	CALE D'EPAISSEUR DIKTEPLAAT	EINSTELLSCHEIBCHEN MELLEMLAEG	198S
22		222675A1		AR	SHIM 0,635 mm SUPLEMENTO	SPESSORE CALCO DE AFINACAO	CALE D'EPAISSEUR DIKTEPLAAT	EINSTELLSCHEIBCHEN MELLEMLAEG	198S
23		222732A1		1	RING, SNAP ANILLO DE RESORTE	ANELLO ELASTICO ANEL	ANNEAU D'ARRÊT RING, SNAP	SICHERUNGSRING LÅSERING	054A
24		226851A1		1	SEAL, OIL JUNTA DE ACEITE	PARAOLIO VEDADOR DE OLEO	JOINT D'HUILE OIL-SEAL	ÖLDICHTUNG OLIESEGL	P278
25		628-20060		2	SCREW M20 x 60; 10,9 TORNILLO	VITE PARAFUSO	VIS SCHROEF	SCHRAUBE SKRUE	7450
26		828-20150		2	SCREW M20 x 150; 10.9 TORNILLO	VITE PARAFUSO	VIS SCHROEF	SCHRAUBE SKRUE	7450

MFD AXLE - DRIVE SHAFT
ASSALE MFD - ALBERO MOTORE
ESSIEU DE PONT AVANT - ARBRE D'ENTRAÎNEMENT
ALLRADANTRIEBSACHSEN-ANTRIEBSWELLE

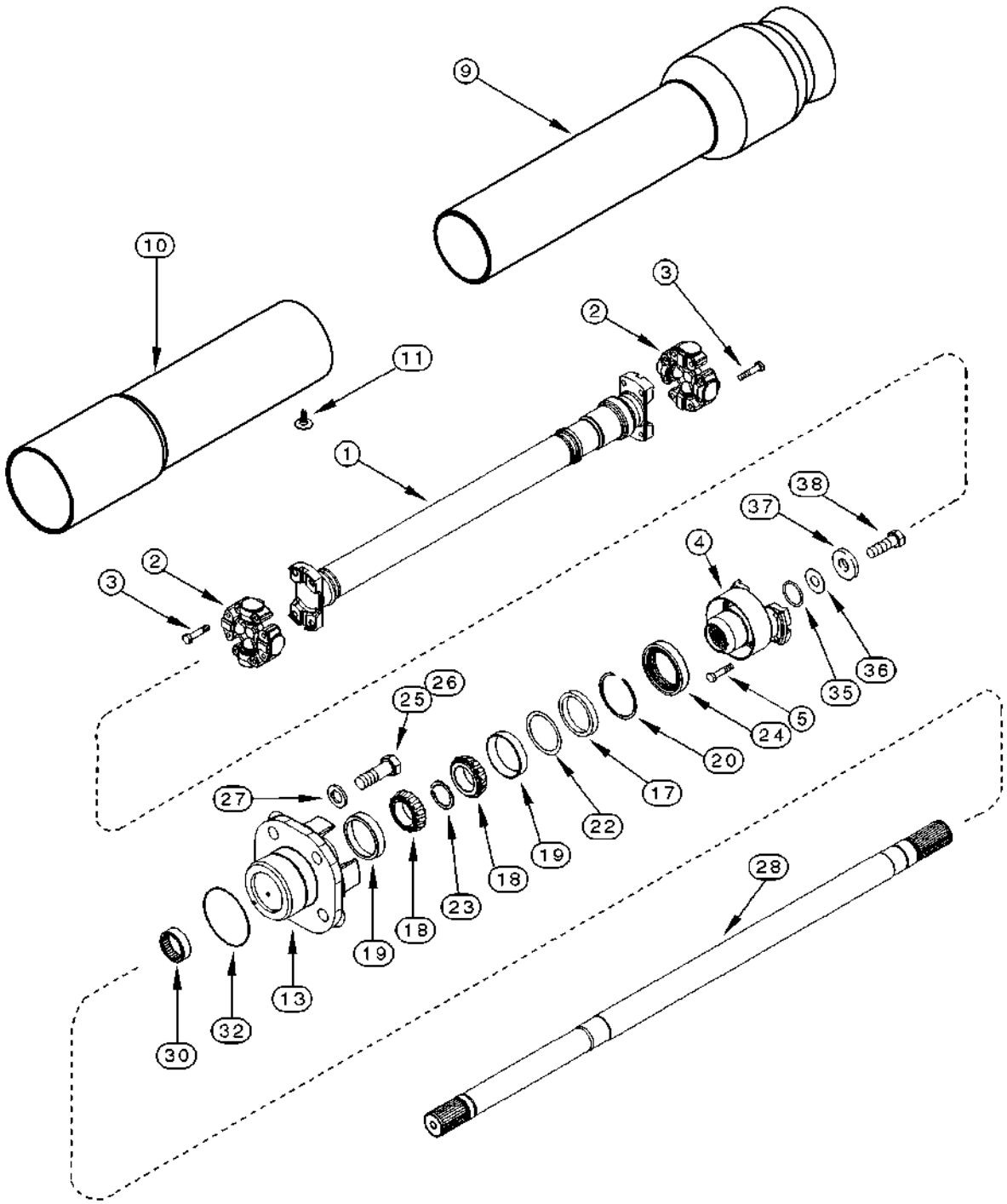

EJE DE LA TDM - EJE DE LA TRANSMISIÓN
EIXO DA TMD - EIXO DE TRANSMISSÃO
MFD-AS - AANDRIJFAS
MFD AKSEL - DRIVAKSEL

R	N	P.N.	MOD	Q	Description Denominacion	Descrizione Denominação	Description Beschrijving	Bezeichnung Beskrivelse	L.C.
27		896-12020		4	WASHER 22 x 37 x 4 mm ARANDELA	ROSETTA PIANA ANILHA	RONDELLE SLUITRING	SCHEIBE FLADSKIVE	9720
28		197595A3		1	SHAFT EJE	ALBERO VEIO	ARBRE AS	WELLE AKSEL	016A
30		205369R91		1	BEARING, NEEDLE RODAMIENTO DE RPDIL	CUSCINETTO A RULLINI ROLAMENTO	ROULEMENT A AIGUILLE LAGER, NAALD	NADELLAGER NAALELEJE	344C
32		238-5043		1	SEALRING 3-1/2 ID x 1/16 RETEN	ANELLO, GUARNIZIONE ANEL VEDADOR	JOINT ANNULAIRE SEALRING	LIPPENDICHTING SEALRING	Z125
35		238-5220		1	O-RING 1-3/8 ID x 1/8 JUNTA HERMETICA	ANELLO TOROIDALE ANEL O	JOINT TORIQUE O-RING	O-RING O-RING	7176
36		337680A1		AR	SHIM 0,203 mm SUPLEMENTO	SPESSORE CALCO DE AFINACAO	CALE D'EPAISSEUR DIKTEPLAAT	EINSTELLSCHEIBCHEN MELLEMLAEG	198S
36		222674A1		AR	SHIM 0,356 mm SUPLEMENTO	SPESSORE CALCO DE AFINACAO	CALE D'EPAISSEUR DIKTEPLAAT	EINSTELLSCHEIBCHEN MELLEMLAEG	198S
36		222000A1		AR	SHIM 0,508 mm SUPLEMENTO	SPESSORE CALCO DE AFINACAO	CALE D'EPAISSEUR DIKTEPLAAT	EINSTELLSCHEIBCHEN MELLEMLAEG	198S
36		222001A1		AR	SHIM 0,559 mm SUPLEMENTO	SPESSORE CALCO DE AFINACAO	CALE D'EPAISSEUR DIKTEPLAAT	EINSTELLSCHEIBCHEN MELLEMLAEG	198S
36		222002A1		AR	SHIM 0,635 mm SUPLEMENTO	SPESSORE CALCO DE AFINACAO	CALE D'EPAISSEUR DIKTEPLAAT	EINSTELLSCHEIBCHEN MELLEMLAEG	198S
37		221943A1		1	WASHER ARANDELA	ROSETTA PIANA ANILHA	RONDELLE SLUITRING	BEILAGSCHEIBE FLADSKIVE	131R
38		628-16050		1	SCREW M16 x 50; 10,9 TORNILLO	VITE PARAFUSO	VIS SCHROEF	SCHRAUBE SKRUE	040V

TRANSMISSION CONTROL VALVE LOCATION
SEDE DELLA VALVOLA DI COMANDO DELLA TRASMISSIONE
EMPLACEMENT DISTRIBUTEUR DE LA TRANSMISSION
ANORDNUNG DES GETRIEBE-STEUERVENTILS

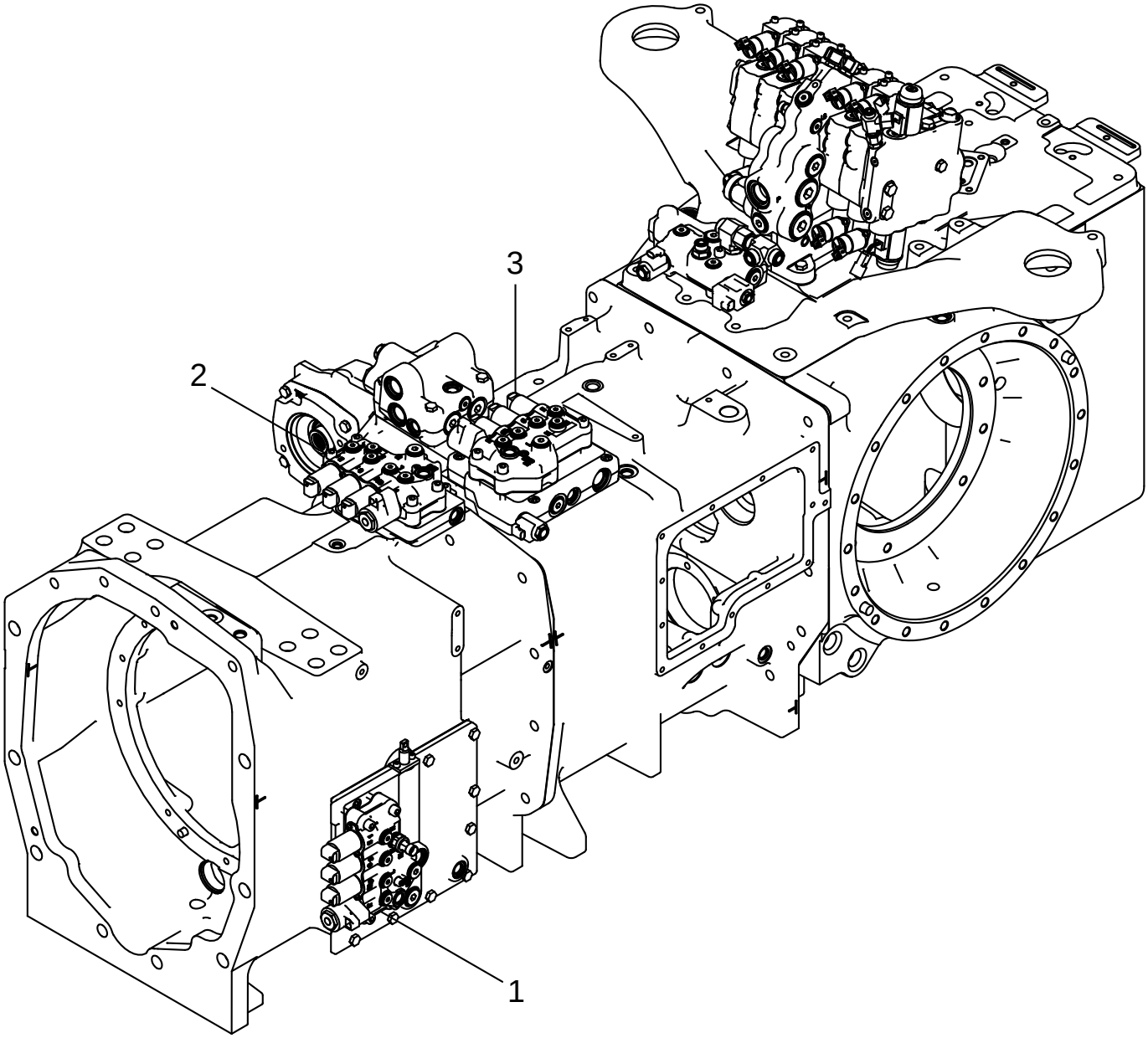

UBICACIÓN DE LA VÁLVULA DE CONTROL DE LA TRANSMISIÓN
LOCALIZAÇÃO DA VÁLVULA DE CONTROLO DA TRANSMISSÃO
LOKATIE TRANSMISSIEREGELKLEP
TRANSMISSIONSSTYREVENTILENS PLACERING

R	N	P.N.	MOD	Q	Description Denominacion	Descrizione Denominação	Description Beschrijving	Bezeichnung Beskrivelse	L.C.
1	1	450729A2		1	VALVE VALVULA	VALVOLA VALVULA	SOUPAPE VALVE	VENTIL VALVE	9620
2	2, 3	450721A2		1	VALVE VALVULA	VALVOLA VALVULA	SOUPAPE VALVE	VENTIL VALVE	9620
2	4, 5	450726A2		1	VALVE VALVULA	VALVOLA VALVULA	SOUPAPE VALVE	VENTIL VALVE	9620
3	6	450728A2		1	VALVE VALVULA	VALVOLA VALVULA	SOUPAPE VALVE	VENTIL VALVE	9620

(1) See Figure 06-26
(2) Without Creep Speed
(3) See Figure 06-27
(4) With Creep Speed
(5) See Figure 06-28
(6) See Figure 06-29

VALVE ASSEMBLY - TRANSMISSION CONTROL (450729A2)
GRUPPO DELLA VALVOLA - COMANDO DELLA TRASMISSIONE (450729A2)
DISTRIBUTEUR DE LA TRANSMISSION (450729A2)
GETRIEBE-STEUERVENTIL (450729A2)

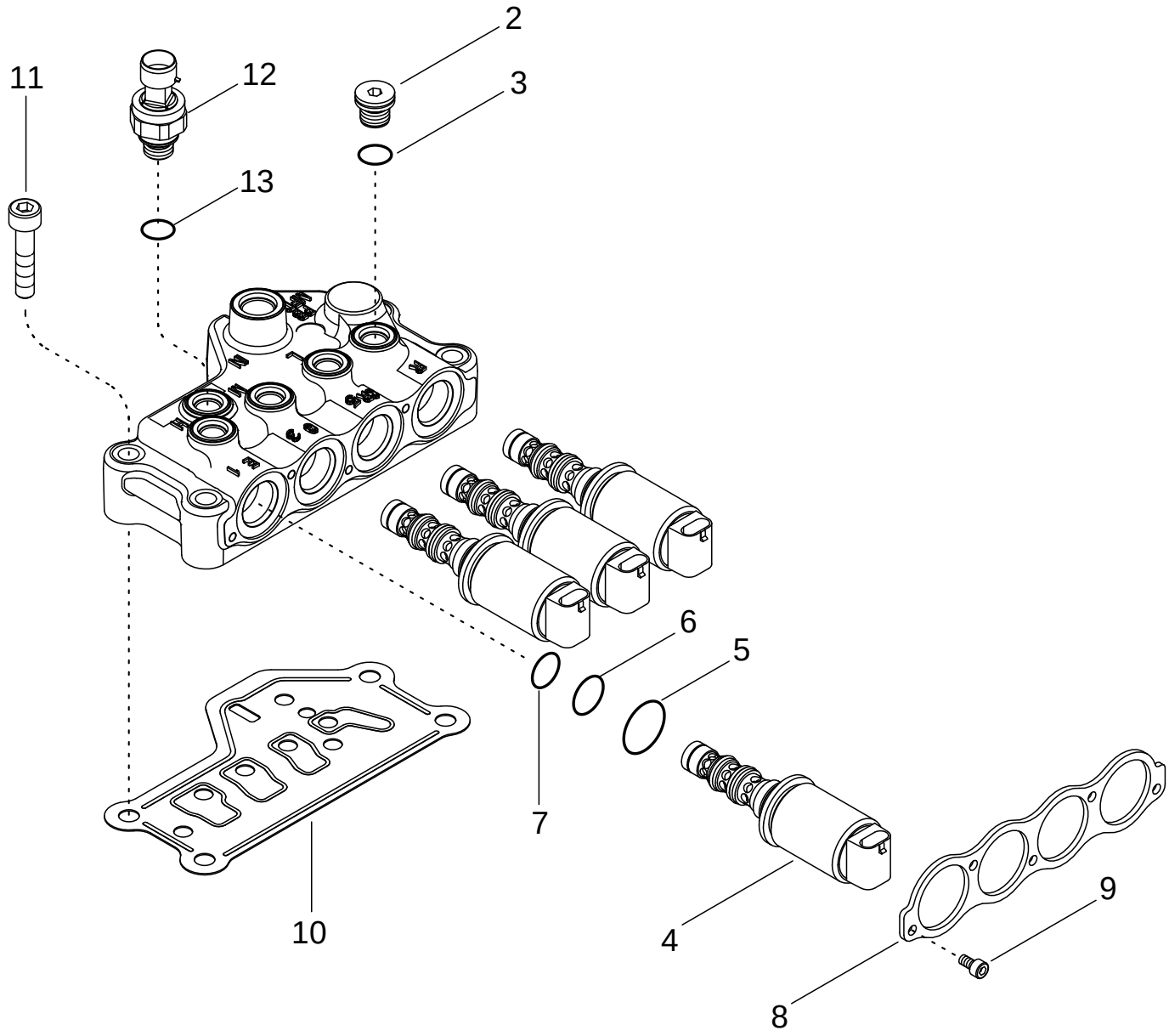

CONJUNTO DE LA VÁLVULA - CONTROL DE LA TRANSMISIÓN (450729A2)
CONJUNTO DA VÁLVULA - CONTROLO DA TRANSMISSÃO (450729A2)
KLEPCONSTRUCTIE - TRANSMISSIEBEDIENING (450729A2)
VENTILSAMLING - TRANSMISSIONSSTYRING (450729A2)

R	N	P.N.	MOD	Q	Description Denominacion	Descrizione Denominação	Description Beschrijving	Bezeichnung Beskrivelse	L.C.
		450729A2		1	VALVE Inc. 1 - 9, 12, 13 VALVULA	VALVOLA VALVULA	SOUPAPE VALVE	VENTIL VALVE	9620
1		**NSS**		1	NOT SERVICED SEPARATELY Body, Valve NO SE REPARA SEPARA	NON FORNITO SEPARAT NOT SERVICED SEPARA	NON FOURNI SEPAREMI NIET ALLEEN VERKRIJG	KEIN ERSATZTEIL NOT SERVICED SEPARA	064N
2		**221576A1**		4	PLUG M14 Or, Inc. 3 TAPÓN	TAPPO BUJÃO	BOUCHON PLUG	STOPFEN PROP	050T
3		**637-63113**		1	O-RING 11,3 ID x 2,2 JUNTA HERMETICA	ANELLO TOROIDALE O-RING	JOINT THORIQUE O-RING	DICHTRING O-RING	055A
4		**86989388**		4	SOLENOID Inc. 5 - 7 SOLENOIDE	SOLENOIDE SOLEMOID	SOLENOIDE SOLENOIDE	MAGNETSPULE, MECH. MAGNETVENTIL	168S
5		**87014033**		1	O-RING JUNTA HERMETICA	ANELLO TOROIDALE O-RING	JOINT THORIQUE O-RING	DICHTRING O-RING	055A
6		**238-7016**		1	O-RING 5/8 ID x 1/16 JUNTA HERMETICA	ANELLO TOROIDALE ANEL O	JOINT TORIQUE O-RING	O-RING O-RING	7176
7		**238-7015**		1	O-RING 9/16 ID X 1/16 JUNTA HERMETICA	ANELLO TOROIDALE ANEL O	JOINT TORIQUE O-RING	O-RING O-RING	7176
8		**86985026**		1	COVER TAPADERA	COPERCHIO COBERTA	COUVERCLE DEKSEL	DECKEL DÆKSEL	265C
9		**864-5010**		6	SCREW M5 x 10 TORNILLO	VITE PARAFUSO	VIS SCHROEF	SCHRAUBE SKRUE	7450
10		**444196A2**	a	1	GASKET JUNTA HERMETICA	GUARNIZIONE JUNTA	JOINT DICHTINGSSTUK	DICHTUNG, FLACH PAKNING	123G
10		**87445066**	b	1	GASKET JUNTA HERMETICA	GUARNIZIONE JUNTA	JOINT DICHTINGSSTUK	DICHTUNG, FLACH PAKNING	123G
11		**864-10055**		4	SCREW M10 x 55 mm TORNILLO	VITE PARAFUSO	VIS SCHROEF	SCHRAUBE SKRUE	7450
12		**86987513**		1	SENSOR Inc. 13 SENSOR	SENSORE SENSOR	CAPTEUR SENSOR	SENSOR FØLER	608S
13		**637-63113**		1	O-RING 11,3 ID x 2,2 JUNTA HERMETICA	ANELLO TOROIDALE O-RING	JOINT THORIQUE O-RING	DICHTRING O-RING	055A

(a) BSN AJB0355338
(b) ASN AJB0355338

VALVE ASSEMBLY - TRANSMISSION CONTROL (450721A2)
GRUPPO DELLA VALVOLA - COMANDO DELLA TRASMISSIONE (450721A2)
DISTRIBUTEUR DE LA TRANSMISSION (450721A2)
GETRIEBE-STEUERVENTIL (450721A2)

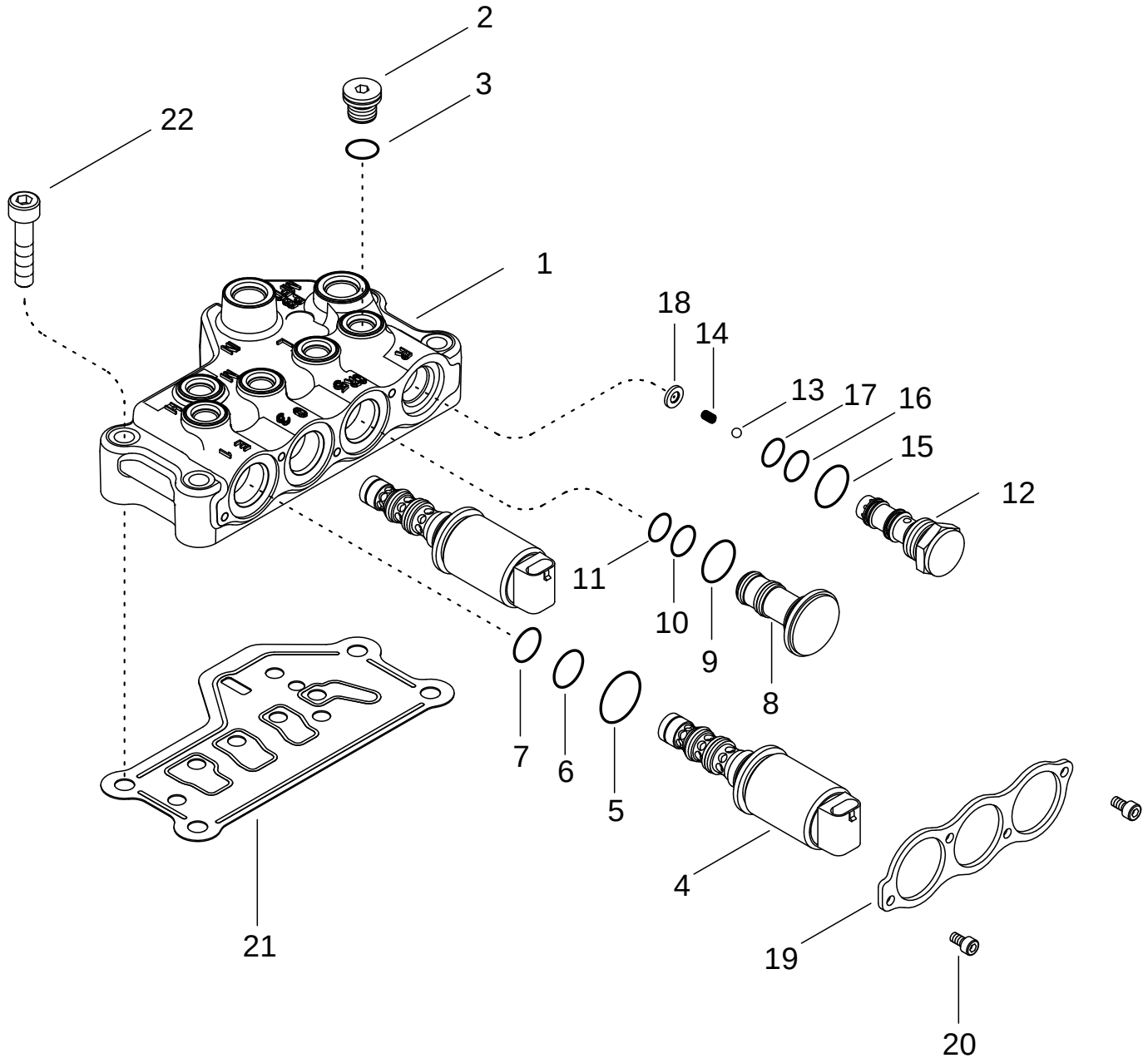

CONJUNTO DE LA VÁLVULA - CONTROL DE LA TRANSMISIÓN (450721A2)
CONJUNTO DA VÁLVULA - CONTROLO DA TRANSMISSÃO (450721A2)
KLEPCONSTRUCTIE - TRANSMISSIEBEDIENING (450721A2)
VENTILSAMLING - TRANSMISSIONSSTYRING (450721A2)

R	N	P.N.	MOD	Q	Description Denominacion	Descrizione Denominação	Description Beschrijving	Bezeichnung Beskrivelse	L.C.
		450721A2		1	VALVE Inc. 1 - 20 VALVULA	VALVOLA VALVULA	SOUPAPE VALVE	VENTIL VALVE	9620
1		NSS		1	NOT SERVICED SEPARATELY Body, Valve NO SE REPARA SEPARA	NON FORNITO SEPARAT NOT SERVICED SEPARA	NON FOURNI SEPAREMI NIET ALLEEN VERKRIJG	KEIN ERSATZTEIL NOT SERVICED SEPARA	064N
2		221576A1		4	PLUG M14 Or, Inc. 3 TAPÓN	TAPPO BUJÃO	BOUCHON PLUG	STOPFEN PROP	050T
3		637-63113		1	O-RING 11,3 ID x 2,2 JUNTA HERMETICA	ANELLO TOROIDALE O-RING	JOINT THORIQUE O-RING	DICHTRING O-RING	055A
4		86989388		2	SOLENOID Inc. 5 - 7 SOLENOIDE	SOLENOIDE SOLEMOID	SOLENOIDE SOLENOIDE	MAGNETSPULE, MECH. MAGNETVENTIL	168S
5		87014033		1	O-RING JUNTA HERMETICA	ANELLO TOROIDALE O-RING	JOINT THORIQUE O-RING	DICHTRING O-RING	055A
6		238-7016		1	O-RING 5/8 ID x 1/16 JUNTA HERMETICA	ANELLO TOROIDALE ANEL O	JOINT TORIQUE O-RING	O-RING O-RING	7176
7		238-7015		1	O-RING 9/16 ID X 1/16 JUNTA HERMETICA	ANELLO TOROIDALE ANEL O	JOINT TORIQUE O-RING	O-RING O-RING	7176
8		86984122		1	PLUG Inc. 9 - 11 TAPÓN	TAPPO BUJÃO	BOUCHON PLUG	STOPFEN PROP	050T
9		87014033		1	O-RING JUNTA HERMETICA	ANELLO TOROIDALE O-RING	JOINT THORIQUE O-RING	DICHTRING O-RING	055A
10		238-7016		1	O-RING 5/8 ID x 1/16 JUNTA HERMETICA	ANELLO TOROIDALE ANEL O	JOINT TORIQUE O-RING	O-RING O-RING	7176
11		238-7015		1	O-RING 9/16 ID X 1/16 JUNTA HERMETICA	ANELLO TOROIDALE ANEL O	JOINT TORIQUE O-RING	O-RING O-RING	7176
		235532A3		1	VALVE, PRESSURE RELIEF Inc. 12 - 18 VÁLVULA, DESCARGA	VALVOLA, DI SICUREZZA VÁLVULA, DESCARGA	SOUPAPE, DÉCHARGE OVERDRUKVENTIEL	ÜBERDRUCKVENTIL SIKKERHEDSVENTIL	007V
12		NSS		1	NOT SERVICED SEPARATELY Valve, Check NO SE REPARA SEPARA	NON FORNITO SEPARAT NOT SERVICED SEPARA	NON FOURNI SEPAREMI NIET ALLEEN VERKRIJG	KEIN ERSATZTEIL NOT SERVICED SEPARA	064N
13		NSS		1	NOT SERVICED SEPARATELY Ball NO SE REPARA SEPARA	NON FORNITO SEPARAT NOT SERVICED SEPARA	NON FOURNI SEPAREMI NIET ALLEEN VERKRIJG	KEIN ERSATZTEIL NOT SERVICED SEPARA	064N
14		NSS		1	NOT SERVICED SEPARATELY Spring NO SE REPARA SEPARA	NON FORNITO SEPARAT NOT SERVICED SEPARA	NON FOURNI SEPAREMI NIET ALLEEN VERKRIJG	KEIN ERSATZTEIL NOT SERVICED SEPARA	064N
15		237-6010		1	O-RING 3/4 ID x 3/32 JUNTA HERMETICA	ANELLO TOROIDALE ANEL O	JOINT TORIQUE O-RING	O-RING O-RING	7176
16		238-5015		1	O-RING 9/16 ID x 1/16 JUNTA HERMETICA	ANELLO TOROIDALE O-RING	JOINT THORIQUE O-RING	DICHTRING O-RING	055A
17		238-5014		1	O-RING 1/2 ID x 1/16 JUNTA HERMETICA	ANELLO TOROIDALE ANEL O	JOINT TORIQUE O-RING	O-RING O-RING	7176
18		NSS		1	NOT SERVICED SEPARATELY Plug NO SE REPARA SEPARA	NON FORNITO SEPARAT NOT SERVICED SEPARA	NON FOURNI SEPAREMI NIET ALLEEN VERKRIJG	KEIN ERSATZTEIL NOT SERVICED SEPARA	064N
19		86985027		1	COVER TAPADERA	COPERCHIO COBERTA	COUVERCLE DEKSEL	DECKEL DÆKSEL	265C

VALVE ASSEMBLY - TRANSMISSION CONTROL (450721A2)
GRUPPO DELLA VALVOLA - COMANDO DELLA TRASMISSIONE (450721A2)
DISTRIBUTEUR DE LA TRANSMISSION (450721A2)
GETRIEBE-STEUERVENTIL (450721A2)

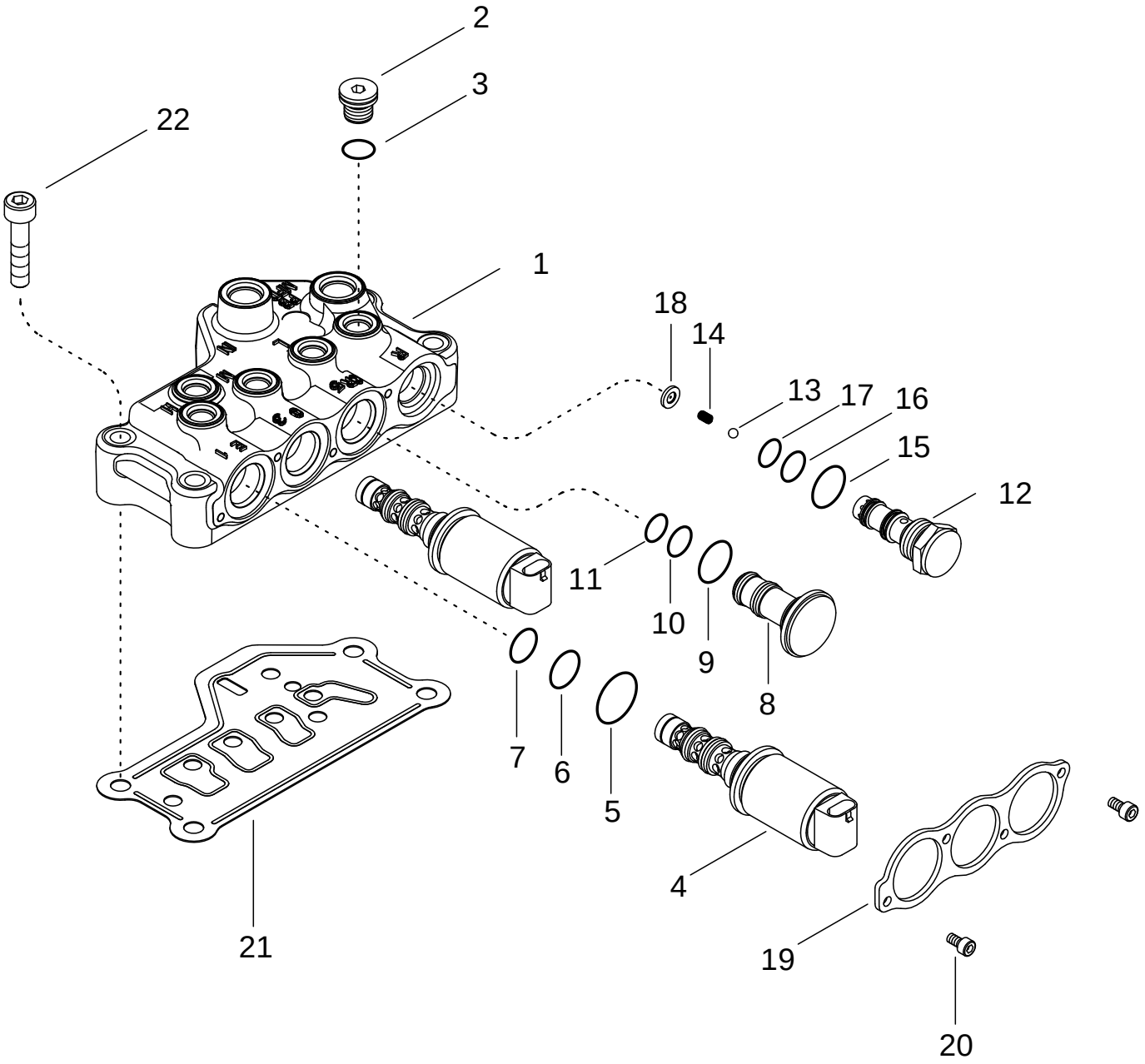

CONJUNTO DE LA VÁLVULA - CONTROL DE LA TRANSMISIÓN (450721A2)
CONJUNTO DA VÁLVULA - CONTROLO DA TRANSMISSÃO (450721A2)
KLEPCONSTRUCTIE - TRANSMISSIEBEDIENING (450721A2)
VENTILSAMLING - TRANSMISSIONSSTYRING (450721A2)

R	N	P.N.	MOD	Q	Description Denominacion	Descrizione Denominação	Description Beschrijving	Bezeichnung Beskrivelse	L.C.
20		864-5010		4	SCREW M5 x 10 TORNILLO	VITE PARAFUSO	VIS SCHROEF	SCHRAUBE SKRUE	7450
21		444196A2	a	1	GASKET JUNTA HERMETICA	GUARNIZIONE JUNTA	JOINT DICHTINGSSTUK	DICHTUNG, FLACH PAKNING	123G
21		87445066	b	1	GASKET JUNTA HERMETICA	GUARNIZIONE JUNTA	JOINT DICHTINGSSTUK	DICHTUNG, FLACH PAKNING	123G
22		864-10055		4	SCREW M10 x 55 mm TORNILLO	VITE PARAFUSO	VIS SCHROEF	SCHRAUBE SKRUE	7450

(a) BSN AJB0355338
(b) ASN AJB0355338

VALVE ASSEMBLY - TRANSMISSION CONTROL (450726A2)
GRUPPO DELLA VALVOLA - COMANDO DELLA TRASMISSIONE (450726A2)
DISTRIBUTEUR DE LA TRANSMISSION (450726A2)
GETRIEBE-STEUERVENTIL (450726A2)

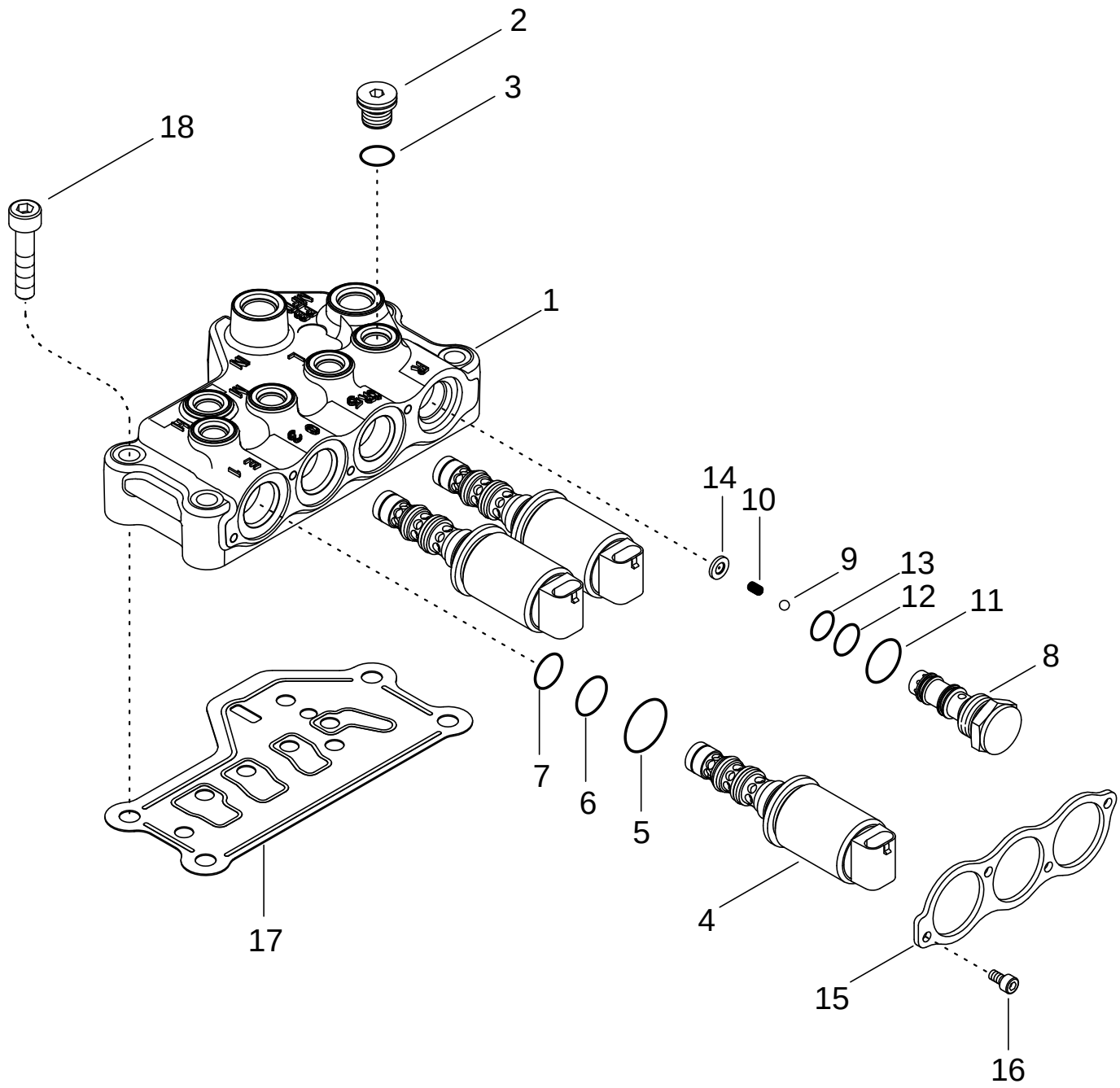

CONJUNTO DE LA VÁLVULA - CONTROL DE LA TRANSMISIÓN (450726A2)
CONJUNTO DA VÁLVULA - CONTROLO DA TRANSMISSÃO (450726A2)
KLEPCONSTRUCTIE - TRANSMISSIEBEDIENING (450726A2)
VENTILSAMLING - TRANSMISSIONSSTYRING (450726A2)

R	N	P.N.	MOD	Q	Description Denominacion	Descrizione Denominação	Description Beschrijving	Bezeichnung Beskrivelse	L.C.
		450726A2		1	VALVE Inc. 1 - 16 VALVULA	VALVOLA VALVULA	SOUPAPE VALVE	VENTIL VALVE	9620
1		**NSS**		1	NOT SERVICED SEPARATELY Body, Valve				
						NON FORNITO SEPARAT	NON FOURNI SEPAREMI	KEIN ERSATZTEIL	064N
					NO SE REPARA SEPARA	NOT SERVICED SEPARA	NIET ALLEEN VERKRIJG	NOT SERVICED SEPARA	
2		**221576A1**		4	PLUG M14 Or, Inc. 3 TAPÓN	TAPPO BUJÃO	BOUCHON PLUG	STOPFEN PROP	050T
3		**637-63113**		1	O-RING 11,3 ID x 2,2 JUNTA HERMETICA	ANELLO TOROIDALE O-RING	JOINT THORIQUE O-RING	DICHTRING O-RING	055A
4		**86989388**		3	SOLENOID Inc. 5 - 7 SOLENOIDE	SOLENOIDE SOLEMOID	SOLENOIDE SOLENOIDE	MAGNETSPULE, MECH. MAGNETVENTIL	168S
5		**87014033**		1	O-RING JUNTA HERMETICA	ANELLO TOROIDALE O-RING	JOINT THORIQUE O-RING	DICHTRING O-RING	055A
6		**238-7016**		1	O-RING 5/8 ID x 1/16 JUNTA HERMETICA	ANELLO TOROIDALE ANEL O	JOINT TORIQUE O-RING	O-RING O-RING	7176
7		**238-7015**		1	O-RING 9/16 ID X 1/16 JUNTA HERMETICA	ANELLO TOROIDALE ANEL O	JOINT TORIQUE O-RING	O-RING O-RING	7176
		235532A3		1	VALVE, PRESSURE RELIEF Inc. 8 - 14				
						VALVOLA, DI SICUREZZA	SOUPAPE, DÉCHARGE	ÜBERDRUCKVENTIL	007V
					VÁLVULA, DESCARGA	VÁLVULA, DESCARGA	OVERDRUKVENTIEL	SIKKERHEDSVENTIL	
8		**NSS**		1	NOT SERVICED SEPARATELY Valve, Check				
						NON FORNITO SEPARAT	NON FOURNI SEPAREMI	KEIN ERSATZTEIL	064N
					NO SE REPARA SEPARA	NOT SERVICED SEPARA	NIET ALLEEN VERKRIJG	NOT SERVICED SEPARA	
9		**NSS**		1	NOT SERVICED SEPARATELY Ball				
						NON FORNITO SEPARAT	NON FOURNI SEPAREMI	KEIN ERSATZTEIL	064N
					NO SE REPARA SEPARA	NOT SERVICED SEPARA	NIET ALLEEN VERKRIJG	NOT SERVICED SEPARA	
10		**NSS**		1	NOT SERVICED SEPARATELY Spring				
						NON FORNITO SEPARAT	NON FOURNI SEPAREMI	KEIN ERSATZTEIL	064N
					NO SE REPARA SEPARA	NOT SERVICED SEPARA	NIET ALLEEN VERKRIJG	NOT SERVICED SEPARA	
11		**237-6010**		1	O-RING 3/4 ID x 3/32 JUNTA HERMETICA	ANELLO TOROIDALE ANEL O	JOINT TORIQUE O-RING	O-RING O-RING	7176
12		**238-5015**		1	O-RING 9/16 ID x 1/16 JUNTA HERMETICA	ANELLO TOROIDALE O-RING	JOINT THORIQUE O-RING	DICHTRING O-RING	055A
13		**238-5014**		1	O-RING 1/2 ID x 1/16 JUNTA HERMETICA	ANELLO TOROIDALE ANEL O	JOINT TORIQUE O-RING	O-RING O-RING	7176
14		**NSS**		1	NOT SERVICED SEPARATELY Plug				
						NON FORNITO SEPARAT	NON FOURNI SEPAREMI	KEIN ERSATZTEIL	064N
					NO SE REPARA SEPARA	NOT SERVICED SEPARA	NIET ALLEEN VERKRIJG	NOT SERVICED SEPARA	
15		**86985027**		1	COVER TAPADERA	COPERCHIO COBERTA	COUVERCLE DEKSEL	DECKEL DÆKSEL	265C
16		**864-5010**		4	SCREW M5 x 10 TORNILLO	VITE PARAFUSO	VIS SCHROEF	SCHRAUBE SKRUE	7450
17		**444196A2**	a	1	GASKET JUNTA HERMETICA	GUARNIZIONE JUNTA	JOINT DICHTINGSSTUK	DICHTUNG, FLACH PAKNING	123G
17		**87445066**	b	1	GASKET JUNTA HERMETICA	GUARNIZIONE JUNTA	JOINT DICHTINGSSTUK	DICHTUNG, FLACH PAKNING	123G

(a) BSN AJB0355338
(b) ASN AJB0355338

VALVE ASSEMBLY - TRANSMISSION CONTROL (450726A2)
GRUPPO DELLA VALVOLA - COMANDO DELLA TRASMISSIONE (450726A2)
DISTRIBUTEUR DE LA TRANSMISSION (450726A2)
GETRIEBE-STEUERVENTIL (450726A2)

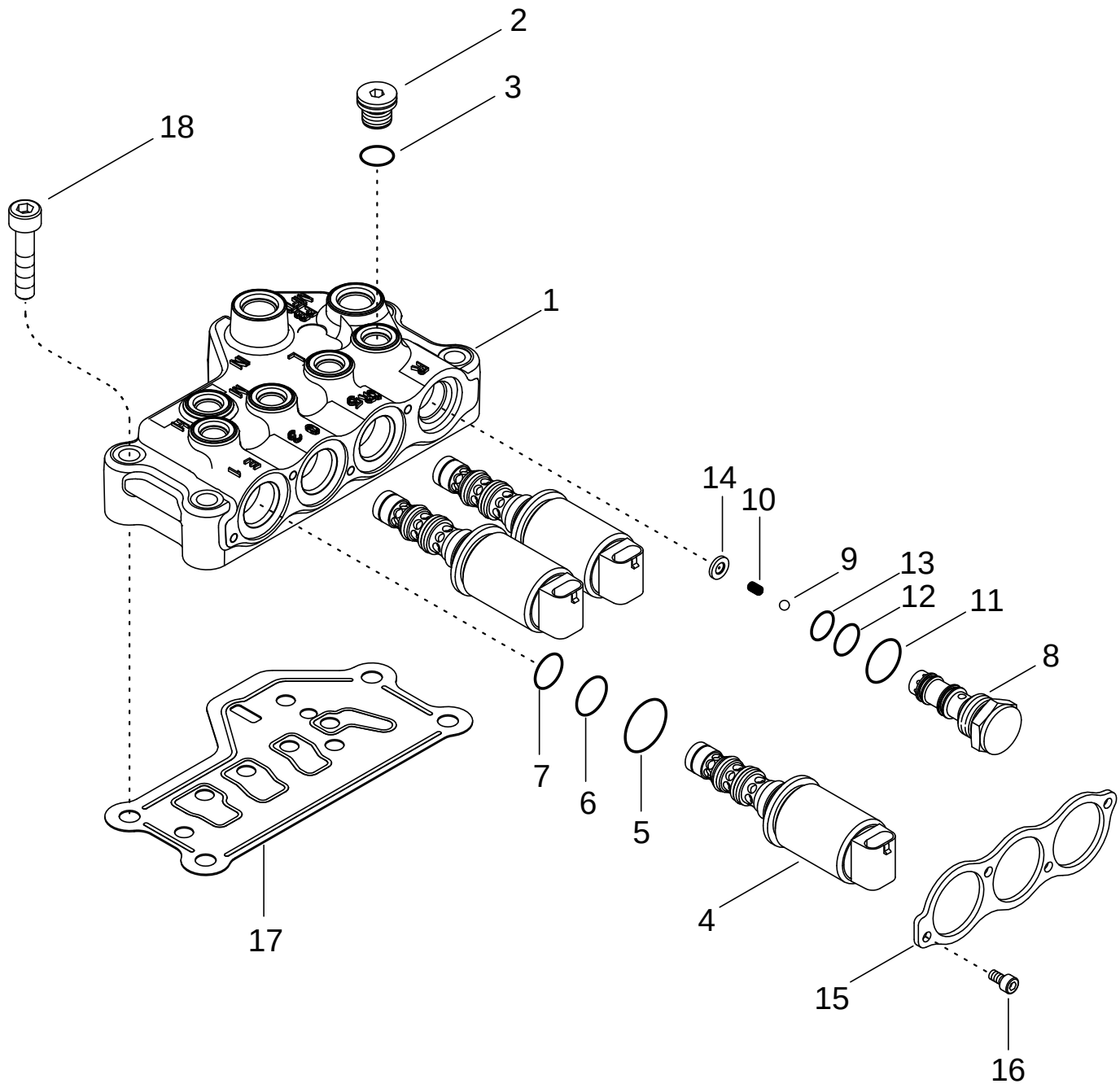

CONJUNTO DE LA VÁLVULA - CONTROL DE LA TRANSMISIÓN (450726A2)
CONJUNTO DA VÁLVULA - CONTROLO DA TRANSMISSÃO (450726A2)
KLEPCONSTRUCTIE - TRANSMISSIEBEDIENING (450726A2)
VENTILSAMLING - TRANSMISSIONSSTYRING (450726A2)

R	N	P.N.	MOD	Q	Description Denominacion	Descrizione Denominação	Description Beschrijving	Bezeichnung Beskrivelse	L.C.
18		864-10055		4	SCREW M10 x 55 mm TORNILLO	VITE PARAFUSO	VIS SCHROEF	SCHRAUBE SKRUE	7450

VALVE ASSEMBLY - TRANSMISSION CONTROL (450728A2)
GRUPPO DELLA VALVOLA - COMANDO DELLA TRASMISSIONE (450728A2)
DISTRIBUTEUR DE LA TRANSMISSION (450728A2)
GETRIEBE-STEUERVENTIL (450728A2)

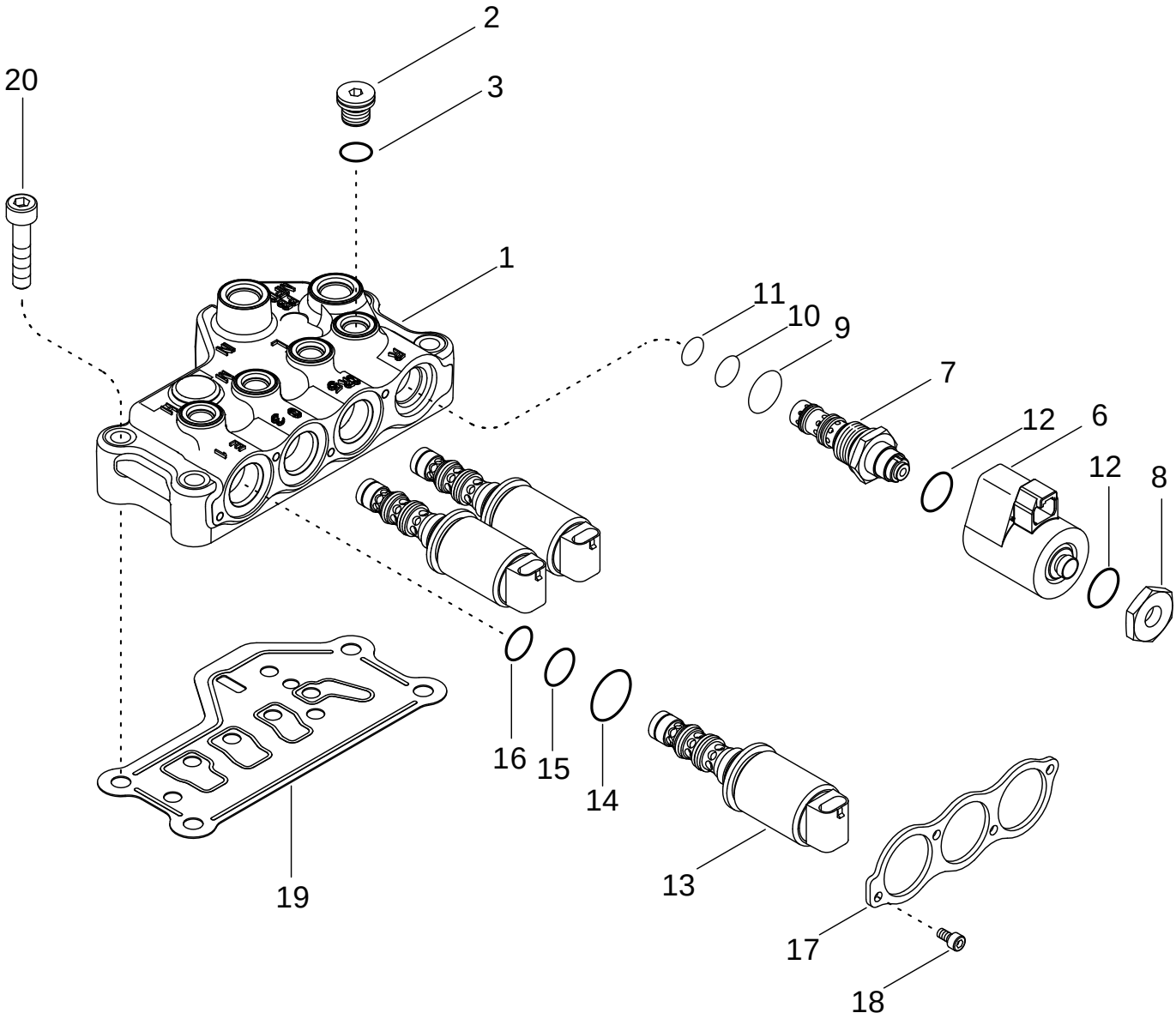

CONJUNTO DE LA VÁLVULA - CONTROL DE LA TRANSMISIÓN (450728A2)
CONJUNTO DA VÁLVULA - CONTROLO DA TRANSMISSÃO (450728A2)
KLEPCONSTRUCTIE - TRANSMISSIEBEDIENING (450728A2)
VENTILSAMLING - TRANSMISSIONSSTYRING (450728A2)

R	N	P.N.	MOD	Q	Description Denominacion	Descrizione Denominação	Description Beschrijving	Bezeichnung Beskrivelse	L.C.
		450728A2		1	VALVE Inc. 1 - 18 VALVULA	VALVOLA VALVULA	SOUPAPE VALVE	VENTIL VALVE	9620
1		NSS		1	NOT SERVICED SEPARATELY Body, Valve NO SE REPARA SEPARA	NON FORNITO SEPARAT NOT SERVICED SEPARA	NON FOURNI SEPAREMI NIET ALLEEN VERKRIJG	KEIN ERSATZTEIL NOT SERVICED SEPARA	064N
2		221576A1		4	PLUG M14 Or, Inc. 3 TAPÓN	TAPPO BUJÃO	BOUCHON PLUG	STOPFEN PROP	050T
3		637-63113		1	O-RING 11,3 ID x 2,2 JUNTA HERMETICA	ANELLO TOROIDALE O-RING	JOINT THORIQUE O-RING	DICHTRING O-RING	055A
		234783A8		1	SOLENOID Inc. 6 - 12 SOLENOIDE	SOLENOIDE SOLEMOID	SOLENOIDE SOLENOIDE	MAGNETSPULE, MECH. MAGNETVENTIL	168S
6		NSS		1	NOT SERVICED SEPARATELY Coil NO SE REPARA SEPARA	NON FORNITO SEPARAT NOT SERVICED SEPARA	NON FOURNI SEPAREMI NIET ALLEEN VERKRIJG	KEIN ERSATZTEIL NOT SERVICED SEPARA	064N
7		NSS		1	NOT SERVICED SEPARATELY Cartridge NO SE REPARA SEPARA	NON FORNITO SEPARAT NOT SERVICED SEPARA	NON FOURNI SEPAREMI NIET ALLEEN VERKRIJG	KEIN ERSATZTEIL NOT SERVICED SEPARA	064N
8		252462A2		1	NUT TUERCA	DADO PORCA	ECROU MOER	MUTTER MØTRIK	010D
9		237-6010		1	O-RING 3/4 ID x 3/32 JUNTA HERMETICA	ANELLO TOROIDALE ANEL O	JOINT TORIQUE O-RING	O-RING O-RING	7176
10		238-5015		1	O-RING 9/16 ID x 1/16 JUNTA HERMETICA	ANELLO TOROIDALE O-RING	JOINT THORIQUE O-RING	DICHTRING O-RING	055A
11		256633A1		1	O-RING 12,9 ID x 1,24 mm JUNTA HERMETICA	ANELLO TOROIDALE O-RING	JOINT THORIQUE O-RING	DICHTRING O-RING	055A
12		238-7115		2	O-RING 11/16 ID x 3/32 JUNTA HERMETICA	ANELLO TOROIDALE ANEL O	JOINT TORIQUE O-RING	O-RING O-RING	7176
13		86989388		3	SOLENOID Inc. 14 - 16 SOLENOIDE	SOLENOIDE SOLEMOID	SOLENOIDE SOLENOIDE	MAGNETSPULE, MECH. MAGNETVENTIL	168S
14		87014033		1	O-RING JUNTA HERMETICA	ANELLO TOROIDALE O-RING	JOINT THORIQUE O-RING	DICHTRING O-RING	055A
15		238-7016		1	O-RING 5/8 ID x 1/16 JUNTA HERMETICA	ANELLO TOROIDALE ANEL O	JOINT TORIQUE O-RING	O-RING O-RING	7176
16		238-7015		1	O-RING 9/16 ID X 1/16 JUNTA HERMETICA	ANELLO TOROIDALE ANEL O	JOINT TORIQUE O-RING	O-RING O-RING	7176
17		86985027		1	COVER TAPADERA	COPERCHIO COBERTA	COUVERCLE DEKSEL	DECKEL DÆKSEL	265C
18		864-5010		4	SCREW M5 x 10 TORNILLO	VITE PARAFUSO	VIS SCHROEF	SCHRAUBE SKRUE	7450
19		444196A2	a	1	GASKET JUNTA HERMETICA	GUARNIZIONE JUNTA	JOINT DICHTINGSSTUK	DICHTUNG, FLACH PAKNING	123G
19		87445066	b	1	GASKET JUNTA HERMETICA	GUARNIZIONE JUNTA	JOINT DICHTINGSSTUK	DICHTUNG, FLACH PAKNING	123G
20		864-10055		4	SCREW M10 x 55 mm TORNILLO	VITE PARAFUSO	VIS SCHROEF	SCHRAUBE SKRUE	7450

(a) BSN AJB0355338
(b) ASN AJB0355338

06-30		p1	11/04

PEDAL - INCHING
PEDALE - SPOSTAMENTO GRADUALE
PÉDALE D'APPROCHE
SCHRITTFAHRPEDAL

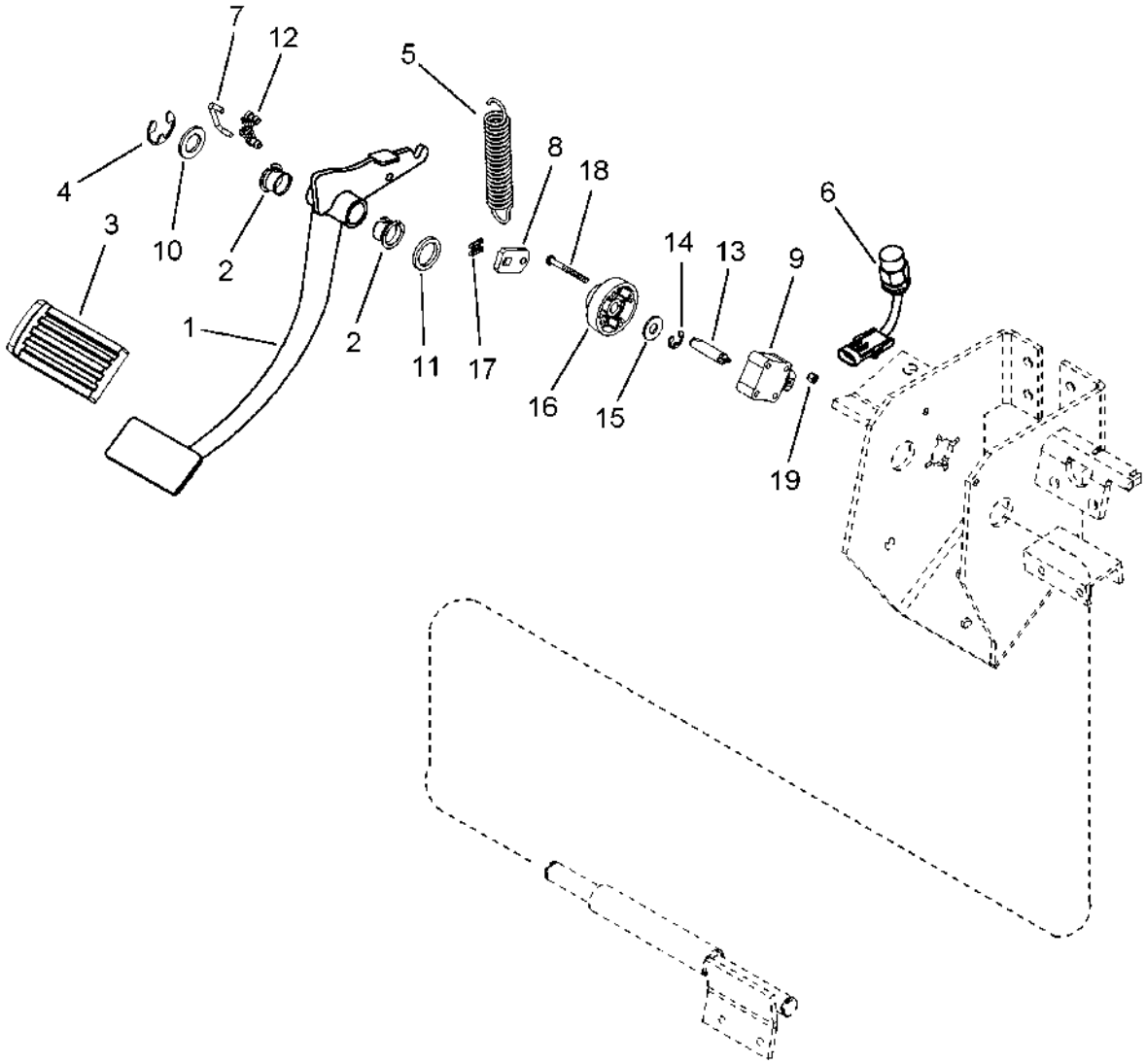

PEDAL - MARCHA LENTA
PEDAL GRADUAL
PEDAAL - INCHING
PEDAL - SKRIDTVIS INDSTILLING

R	N	P.N.	MOD	Q	Description Denominacion	Descrizione Denominação	Description Beschrijving	Bezeichnung Beskrivelse	L.C.
1		416255A3		1	PEDAL ASSY. Inc. 2, 3 PEDAL (CONJUNTO)	GRUPPO PEDALE PEDAL CONJUNTO	PEDALE (ASSEMBLEE) PEDAL ASSY.	PEDAL (KPLT.) PEDAL ASSY.	P523
2		1990753C1		2	PLASTIC RING CASQUILLO PLASTICO	ANELLO DI PLASTICA ANEL DE PLASTICO	BAGUE-PLASTIQUE PLASTIC RING	KUNSTSTOFFRING PLASTIC RING	Z390
3		1999382C1		1	PAD, RUBBER PLACA, CAUCHO	TAMPONE DI GOMMA ALMOFADA DE BORRAC	PLAQUE CAOUTCHOUC RUBBEREN LAGERKUSS	GUMMIPLATTE GUMMIKLODS	025T
4		800-3120		1	RING, SNAP 20 mm ANILLO DE RESORTE	ANELLO ELASTICO ANEL	ANNEAU D'ARRÊT RING, SNAP	SICHERUNGSRING LÅSERING	054A
5		303754A1		1	SPRING RESORTE	MOLLA MOLA	RESSORT VEER	FEDER FJEDER	100M
6		414144A1		1	SWITCH Bottom Of Clutch CONTACTOR	INTERRUTTORE INTERRUPTOR	CONTACTEUR SCHAKELAAR	SCHALTER KONTAKT	075I
7		255077A1		1	ROD VARILLA	ASTA HASTE	TRINGLE STANG	STANGE STANG	090A
8		302275A2		1	LEVER PALANCA	LEVA ALAVANCA	LEVIER HEFBOOM	HEBEL HAANDTAG	045L
9		301271A1		1	SENSOR Position SENSOR	SENSORE SENSOR	CAPTEUR SENSOR	SENSOR FØLER	608S
10		895-11018		1	WASHER 20 x 34 x 3 mm ARANDELA	ROSETTA PIANA ANILHA	RONDELLE SLUITRING	SCHEIBE FLADSKIVE	9720
11		258242A1		1	WASHER ARANDELA	ROSETTA PIANA ANILHA	RONDELLE SLUITRING	BEILAGSCHEIBE FLADSKIVE	131R
12		256833A1		2	RETAINER RETENEDOR	RITEGNO RETENTOR	RETENEUR HOUDER	HALTEVORRICHTUNG HOLDER	109R
13		295013A2		1	PIN PERNO	PERNO PERNO	AXE PEN	BOLZEN STIFT	080P
14		800-4311		1	SNAP RING 11 mm ANILLO DE CIERRE	ANELLO ELASTICO ANEL TRAVA	ANNEAU-D'ARRET SNAP RING	SICHERUNGSRING SNAP RING	P345
15		495-21044		1	WASHER 7/16 x 1 x 5/64 ARANDELA	ROSETTA PIANA ANILHA	RONDELLE SLUITRING	SCHEIBE FLADSKIVE	9720
16		295012A2		1	BUSHING CASQUILLO	BOCCOLA CASQUILHO	BAGUE LAGERBUS	BUECHSE BOESNING	095B
17		3226538R1		1	CLIP SUJETADOR	FERMAGLIO FIXADOR	CLIP KLEM	KLAMMER KLIPS	045F
18		840-1550		4	SCREW M5 x 50; 4,8 TORNILLO	VITE PARAFUSO	VIS SCHROEF	SCHRAUBE SKRUE	7450
19		832-10405		4	NUT M5 TUERCA	DADO PORCA	ECROU MOER	MUTTER MØTRIK	5780

06-31		p1	11/04

LEVER ASSEMBLY - TRANSMISSION CONTROL
GRUPPO DELLA LEVA - COMANDO DELLA TRASMISSIONE
LEVIER DE COMMANDE DE LA TRANSMISSION
SCHALTHEBEL

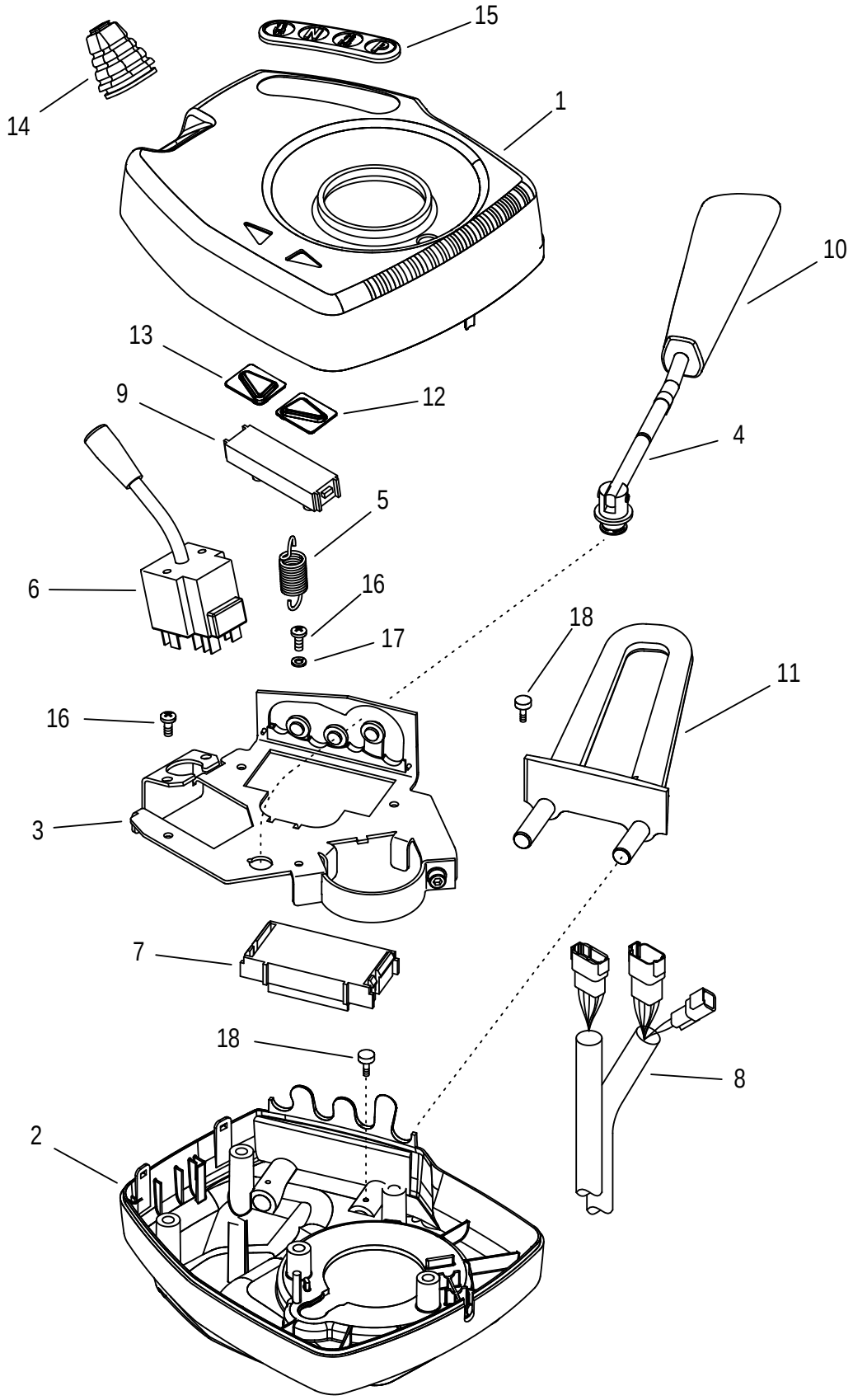

CONJUNTO DE PALANCA - CONTROL DE LA TRANSMISIÓN
CONJUNTO DA ALAVANCA - CONTROLO DA TRANSMISSÃO
HENDEL - TRANSMISSIEBEDIENING
HÅNDGREBSSAMLING - TRANSMISSIONSSTYRING

R	N	P.N.	MOD	Q	Description Denominacion	Descrizione Denominação	Description Beschrijving	Bezeichnung Beskrivelse	L.C.
		86993721		1	CONTROL Inc. 1 -18 MANDO	COMANDO COMANDO	COMMANDE BEDIENING	MONITOR KONTROL	2040
1		325064A1		1	HOUSING Upper CAVIDAD	ALLOGGIAMENTO ALOJAMENTO	CARTER HUIS	GEHÄUSE HUS	4540
2		325065A1		1	HOUSING Lower CAVIDAD	ALLOGGIAMENTO ALOJAMENTO	CARTER HUIS	GEHÄUSE HUS	4540
3		325362A1		1	CHASSIS CHASIS	CHASSIS CHASSI	CHASSIS CHASSIS	FAHRGESTELL CHASSIS	Z439
4		325363A1		1	LEVER Transmission Control PALANCA	LEVA ALAVANCA	LEVIER HEFBOOM	HEBEL HAANDTAG	5110
5		250939A1		1	SPRING RESORTE	MOLLA MOLA	RESSORT VEER	FEDER FJEDER	8315
6		284777A1		1	SWITCH Turn Signal, Horn, High Beam CONTACTOR	INTERRUTTORE INTERRUPTOR	CONTACTEUR SCHAKELAAR	SCHALTER KONTAKT	075I
7		447256A2		1	SWITCH Transmission Control CONTACTOR	INTERRUTTORE INTERRUPTOR	CONTACTEUR SCHAKELAAR	SCHALTER KONTAKT	075I
8		375681A1		1	HARNESS HAZ	CABLAGGIO CHICOTE	FAISCEAU HARNESS	KABELSTRANG HARNESS	4160
9		303465A2		1	LAMP FARO	FANALE FAROL	LAMPE LAMP	LEUCHTE LYGTE	009F
10		325533A1		1	HANDLE MANECILLA	MANIGLIA MANIPULO	POIGNÉE HENDEL	HANDGRIFF HAANDTAG	4120
11		325066A2		1	GUARD DEFENSA	RIPARO PROTECCAO	GARANT AFSCHERMING	SCHUTZBLECH BESKYTTELSESSKAERM	070R
12		303466A1		1	SYMBOLS Right-Hand IDEOGRAMA	IDEOGRAMMI SIMBOLOS	SYMBOLE SYMBOLEN	SYMBOLE SYMBOLER	P829
13		303867A2		1	TUBE Left-Hand TUBO	TUBETTO TUBO	TUBE BUISJE	SCHLAUCH RØR	195T
14		325068A1		1	BELLOWS FUELLE	SOFFIETTO FOLE	SOUFFLET BLAASBALG	FEDERBALG BLÆSEBÆLG	P012
15		358353A1		1	SYMBOLS IDEOGRAMA	IDEOGRAMMI SIMBOLOS	SYMBOLE SYMBOLEN	SYMBOLE SYMBOLER	P829
16		840-1410		7	SCREW M4 x 10; 4.8 TORNILLO	VITE PARAFUSO	VIS SCHROEF	SCHRAUBE SKRUE	7450
17		892-11004		7	WASHER M4 ARANDELA	ROSETTA PIANA ANILHA	RONDELLE SLUITRING	SCHEIBE FLADSKIVE	9720
18		905974R1		2	SCREW M2.9 x 13 TORNILLO	VITE PARAFUSO	VIS SCHROEF	SCHRAUBE SKRUE	7450

06-32		p1	11/04

REAR AXLE - HOUSING
ASSALE POSTERIORE - ALLOGGIAMENTO
CARTER DE L'ESSIEU ARRIÈRE
HINTERES ACHSGEHÄUSE

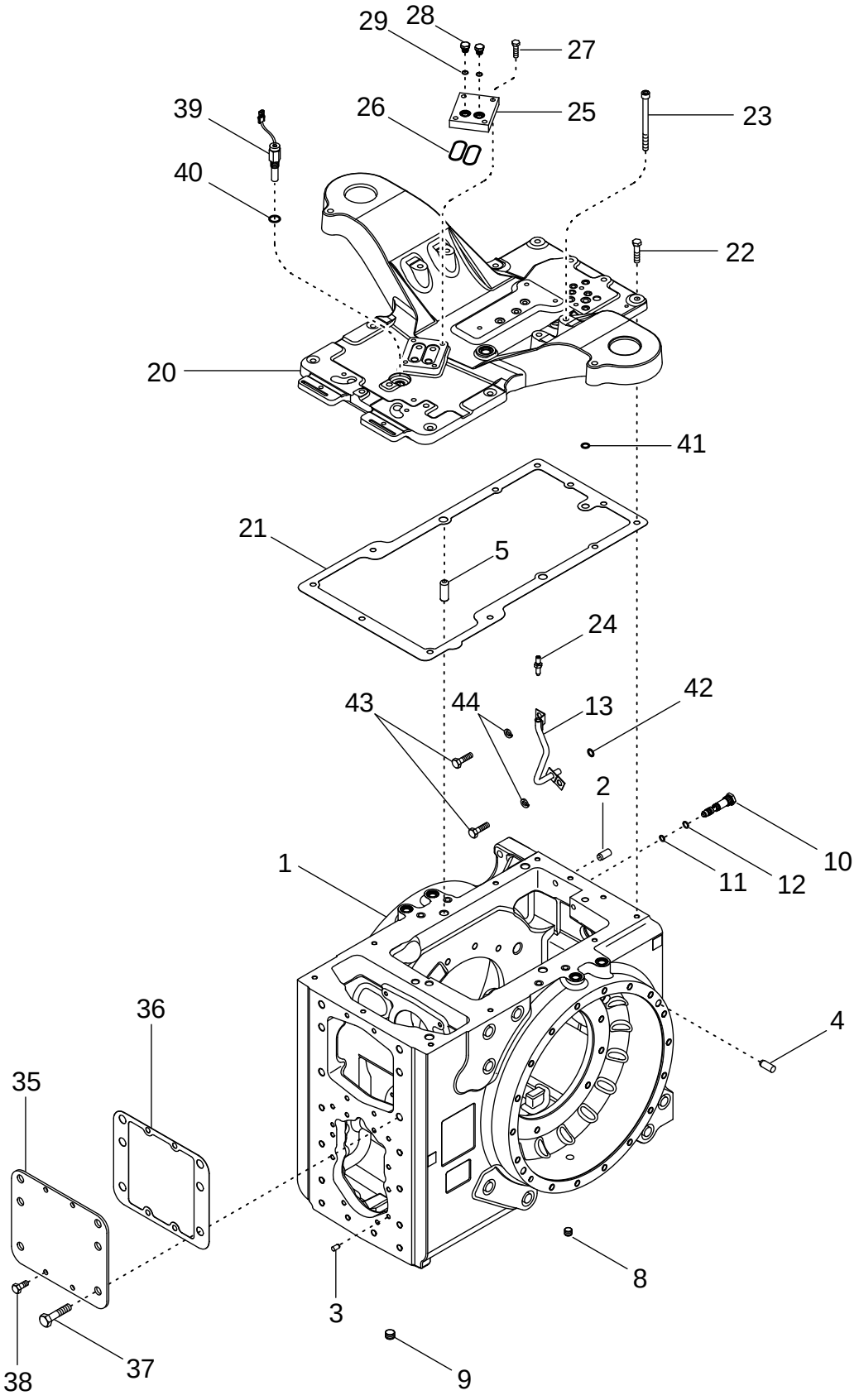

EJE TRASERO - ALOJAMIENTO
CÁRTER DO EIXO TRASEIRO
ACHTERAS - BEHUIZING
BAGAKSEL - HUS

R	N	P.N.	MOD	Q	Description Denominacion	Descrizione Denominação	Description Beschrijving	Bezeichnung Beskrivelse	L.C.
1		410749A3		1	HOUSING ASSY. Inc. 2 - 12 CUBIERTA PRINCIPAL	ALLOGGIAM., COMPL. CARCAÇA CONJUNTO	CARTER (ASSEMBLE) HOUSING ASSY.	GEHAEUSE (KPLT.) HOUSING ASSY.	P479
2		837-16035		1	DOWEL 16 x 35 mm PITON	GRANO GUIA	PION STEL PEN	PAßTIFT DYVEL	P176
3		837-10020		2	PIN M10 x 20 PERNO	PERNO PERNO	AXE PEN	BOLZEN STIFT	080P
4		837-16040		4	DOWEL 16 x 40 mm PITON	GRANO GUIA	PION STEL PEN	PAßTIFT DYVEL	P176
5		37-11232		2	PIN, LARGE 3/4 x 2 BULON/PIN, LARGO	SPINA, GRANDE PINO LARGO	AXE, GROS PIN, LARGE	BOLZEN, GROSS STOR PIND	Z009
8		192791A1		2	PLUG 1/2 in TAPÓN	TAPPO BUJÃO	BOUCHON PLUG	STOPFEN PROP	050T
9		192792A1		1	PLUG 3/4 in TAPÓN	TAPPO BUJÃO	BOUCHON PLUG	STOPFEN PROP	050T
10		411075A1		1	FITTING CONEXION	RACCORDO CONEXAO	RACCORD FITTING	ANSCHLUSSSTÜCK FITTING	3300
11		238-6111		1	O-RING 7/16 ID x 3/32 JUNTA HERMETICA	ANELLO TOROIDALE ANEL O	JOINT TORIQUE O-RING	O-RING O-RING	7176
12		238-6112		1	O-RING 1/2 ID x 3/32 JUNTA HERMETICA	ANELLO TOROIDALE ANEL O	JOINT TORIQUE O-RING	O-RING O-RING	7176
13		409741A1		1	TUBE ASSY. TUBO (CONJUNTO)	TUBO, COMPLESSIVO TUBO CONJUNTO	TUYAUTERIE TUBE ASSY.	ROHRLEITUNG TUBE ASSY.	P465
20		414416A3		1	COVER TAPADERA	COPERCHIO COBERTA	COUVERCLE DEKSEL	DECKEL DÆKSEL	265C
21		413900A1		1	GASKET JUNTA HERMETICA	GUARNIZIONE JUNTA	JOINT DICHTINGSSTUK	DICHTUNG, FLACH PAKNING	123G
22		828-12050		11	SCREW M12 x 50; 10.9 TORNILLO	VITE PARAFUSO	VIS SCHROEF	SCHRAUBE SKRUE	7450
23		863-12150		4	SCREW M12 x 150; 12.9 TORNILLO	VITE PARAFUSO	VIS SCHROEF	SCHRAUBE SKRUE	7450
24		414320A1		1	FITTING CONEXION	RACCORDO CONEXAO	RACCORD FITTING	ANSCHLUSSSTÜCK FITTING	3300
25		440076A1		1	PLATE PLACA	PIASTRA CHAPA	PLAQUE PLAAT	PLATTE PLADE	105P
26		238-6139		2	O-RING 2-3/16 ID X 3/32 JUNTA HERMETICA	ANELLO TOROIDALE ANEL O	JOINT TORIQUE O-RING	O-RING O-RING	7176
27		628-10035		4	SCREW M10 x 35; 10.9 TORNILLO	VITE PARAFUSO	VIS SCHROEF	SCHRAUBE SKRUE	7450
28		220064A1		2	PLUG Inc. 29 TAPÓN	TAPPO BUJÃO	BOUCHON PLUG	STOPFEN PROP	050T
29		637-63113		1	O-RING 11,3 ID x 2,2 JUNTA HERMETICA	ANELLO TOROIDALE O-RING	JOINT THORIQUE O-RING	DICHTRING O-RING	055A
35	1	236602A1		1	COVER COBERTURA	COPERTURA COBERTURA	COUVERTURE AFSCHERMING	ABDECKUNG AFDÆKNING	271C
36		379145A1		1	GASKET JUNTA HERMETICA	GUARNIZIONE JUNTA	JOINT DICHTINGSSTUK	DICHTUNG, FLACH PAKNING	123G
37		628-20045		6	SCREW M20 x 45; 10,9 TORNILLO	VITE PARAFUSO	VIS SCHROEF	SCHRAUBE SKRUE	7450

(1) Without Hitch

REAR AXLE - HOUSING
ASSALE POSTERIORE - ALLOGGIAMENTO
CARTER DE L'ESSIEU ARRIÈRE
HINTERES ACHSGEHÄUSE

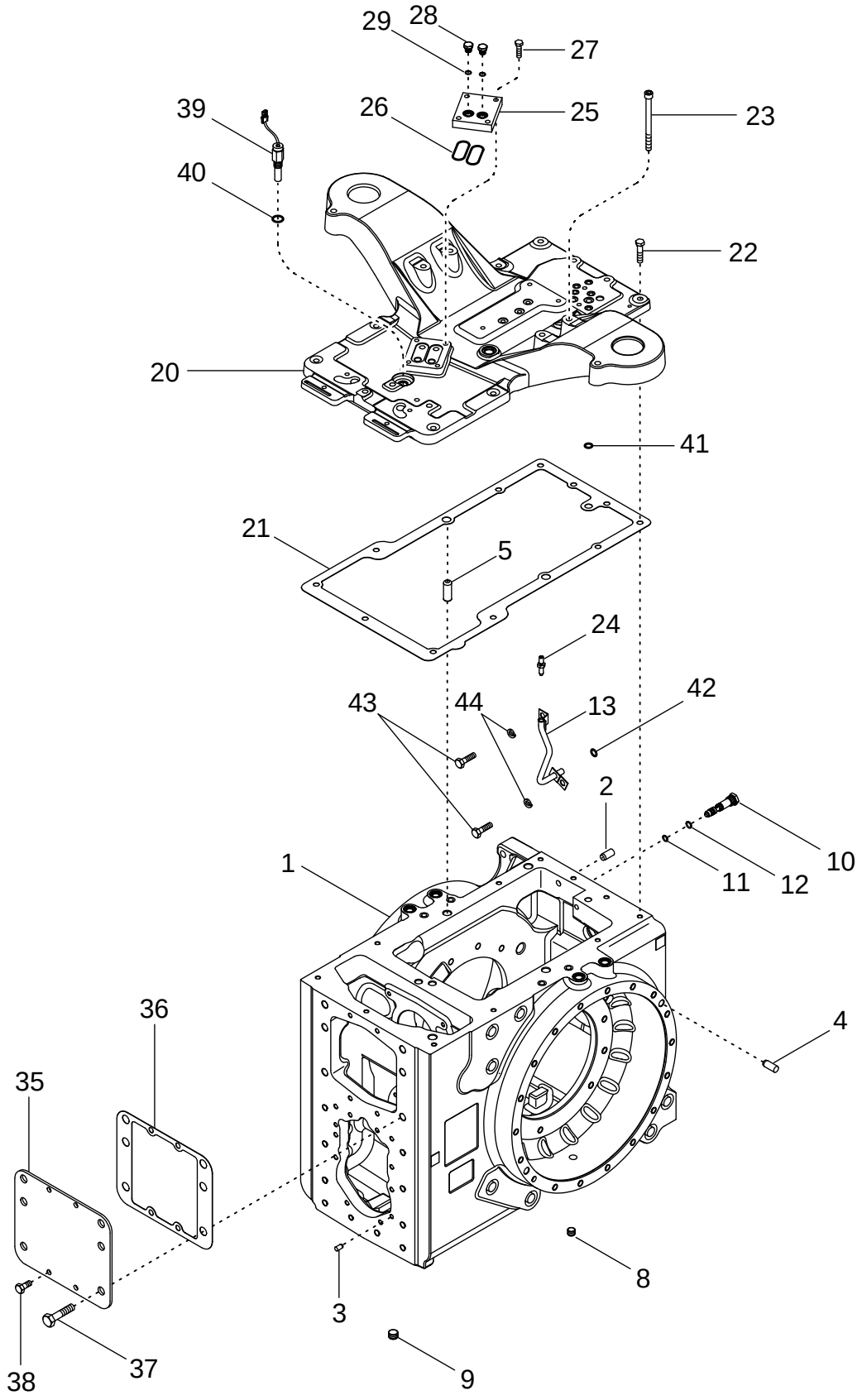

EJE TRASERO - ALOJAMIENTO
CÁRTER DO EIXO TRASEIRO
ACHTERAS - BEHUIZING
BAGAKSEL - HUS

R	N	P.N.	MOD	Q	Description Denominacion	Descrizione Denominação	Description Beschrijving	Bezeichnung Beskrivelse	L.C.
38		628-12025		4	SCREW M12 x 25; 10.9 TORNILLO	VITE PARAFUSO	VIS SCHROEF	SCHRAUBE SKRUE	7450
39		352787A2		1	SENSOR SENSOR	SENSORE SENSOR	CAPTEUR SENSOR	SENSOR FØLER	608S
40		238-5115		1	O-RING 9/16 ID x 1/16 JUNTA HERMETICA	ANELLO TOROIDALE ANEL O	JOINT TORIQUE O-RING	O-RING O-RING	7176
41		238-5111		1	O-RING 7/16 ID x 3/32 JUNTA HERMETICA	ANELLO TOROIDALE ANEL O	JOINT TORIQUE O-RING	O-RING O-RING	7176
42		239-5112		1	SEAL ANILLO DE CIERRE	ANELLO DI TENUTA ANEL DE VEDACAO	JOINT DICHTINGSRING	DICHTUNG PAKNINGSRING	7460
43		613-12025		2	SCREW M12 x 25; 8.8 TORNILLO	VITE PARAFUSO	VIS SCHROEF	SCHRAUBE SKRUE	7450
44		892-11012		2	WASHER, LOCK M12 ARANDELA DE FRENO	ROSETTA DI SICUREZZA ANILHA DE FIXACAO	RONDELLE FREIN VEERRING	SPRENGRING LAASESKIVE	132R

BREATHER - TRANSMISSION
SFIATATOIO - TRASMISSIONE
RENIFLARD - TRANSMISSION
GETRIEBEENTLÜFTER

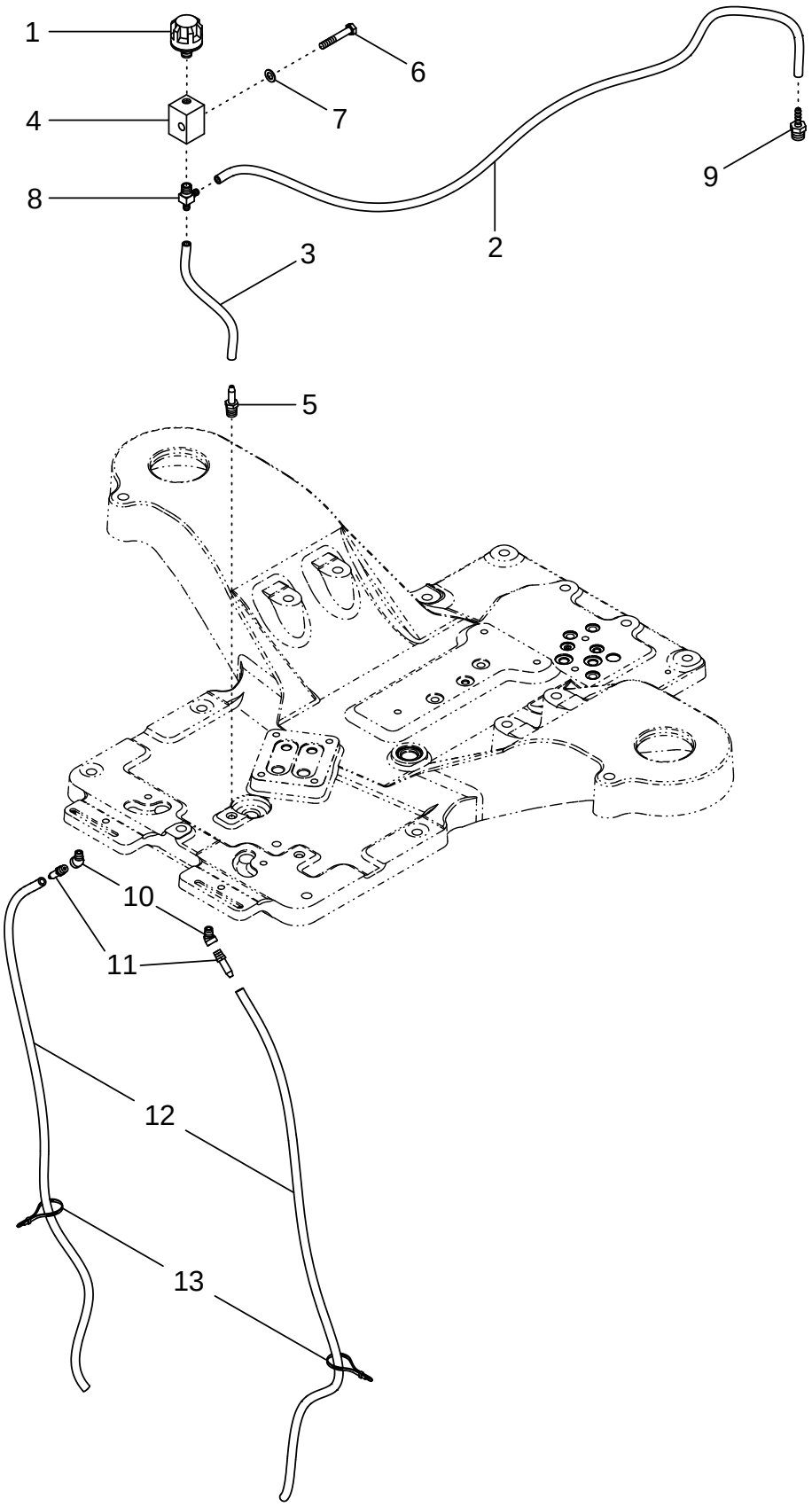

RESPIRADERO DE LA TRANSMISIÓN
RESPIRADOR - TRANSMISSÃO
BELUCHTER - TRANSMISSIE
ÅNDERØR - TRANSMISSION

R	N	P.N.	MOD	Q	Description Denominacion	Descrizione Denominação	Description Beschrijving	Bezeichnung Beskrivelse	L.C.
1		1971726C1		1	BREATHER RESPIRADERO	SFIATATOIO RESPIRADOR	RENIFLARD ONTLUCHTER	ENTLÜFTER UDLUFTNINGSSKRUE	145S
2		359116A1		1	HOSE MANGA	MANICOTTO FLESSIBILE TUBO FLEXIVEL	FLEXIBLE FLEXIBELE BUIS	SCHLAUCHMUFFE SLANGE	4480
3		359117A1		1	HOSE MANGA	MANICOTTO FLESSIBILE TUBO FLEXIVEL	FLEXIBLE FLEXIBELE BUIS	SCHLAUCH SLANGE	030M
4		132093A2		1	BLOCK ASSY. BLOQUE (CONJUNTO)	BOZZELLO, COMPL. BLOCO CONJUNTO	BLOC (ASSEMBLE) BLOCK ASSY.	BLOCK (KPLT.) BLOCK ASSY.	P503
5		220-502		1	COUPLING, BREAK AWAY ACOPLAMIENTO	ATTACCO, CONTROFAS ACOPLAMENTO	ACCOUPLEMENT HYDR. COUPLING, BREAK AWA	ABREISSKUPPLUNG COUPLING, BREAK AWA	2220
6		814-8050		1	SCREW M8 x 50; 8,8 TORNILLO	VITE PARAFUSO	VIS SCHROEF	SCHRAUBE SKRUE	P136
7		895-15008		1	WASHER 9 x 20 x 1,6 mm ARANDELA	ROSETTA PIANA ANILHA	RONDELLE SLUITRING	SCHEIBE FLADSKIVE	9720
8		369378A1		1	TEE RACOR-T	PEZZO A T TE	TE TEE	T-STÜCK T-STYKKE	9020
9		369941A1		1	COUPLING ELEMENTO DE ACOPLAI	TESTA A CAMPANA ELEMENTO DE ACOPLAI	CHAPE KOPPELING	GLOCKENKOPF KOBLING	109T
10		217-15		2	FITTING CONEXION	RACCORDO CONEXAO	RACCORD FITTING	ANSCHLUSSSTÜCK FITTING	3300
11		217-120		2	CONNECTOR, HYD. RACOR	RACCORDO IDRAULICO CONECTOR	RACCORD VERBINDING	STUTZEN FORSKRUNING	020R
12		413825A1		2	HOSE MANGA	MANICOTTO FLESSIBILE TUBO FLEXIVEL	FLEXIBLE FLEXIBELE BUIS	SCHLAUCHMUFFE SLANGE	4480
13		L11541		2	STRAP BANDA	BANDELLA BANDA	SANGLE RIEM	GURT STROP	532B

REAR AXLE - PLANETARY, MX210, MX230 AND MX255
ASSALE POSTERIORE - RIDUTTORI FINALI EPICICLOIDALI, MX210, MX230 E MX255
PLANÉTAIRE DE L'ESSIEU ARRIÈRE, MX210, MX230 ET MX255
HINTERACHSEN-PLANETENGETRIEBE DER SERIEN MX210, MX230 UND MX255

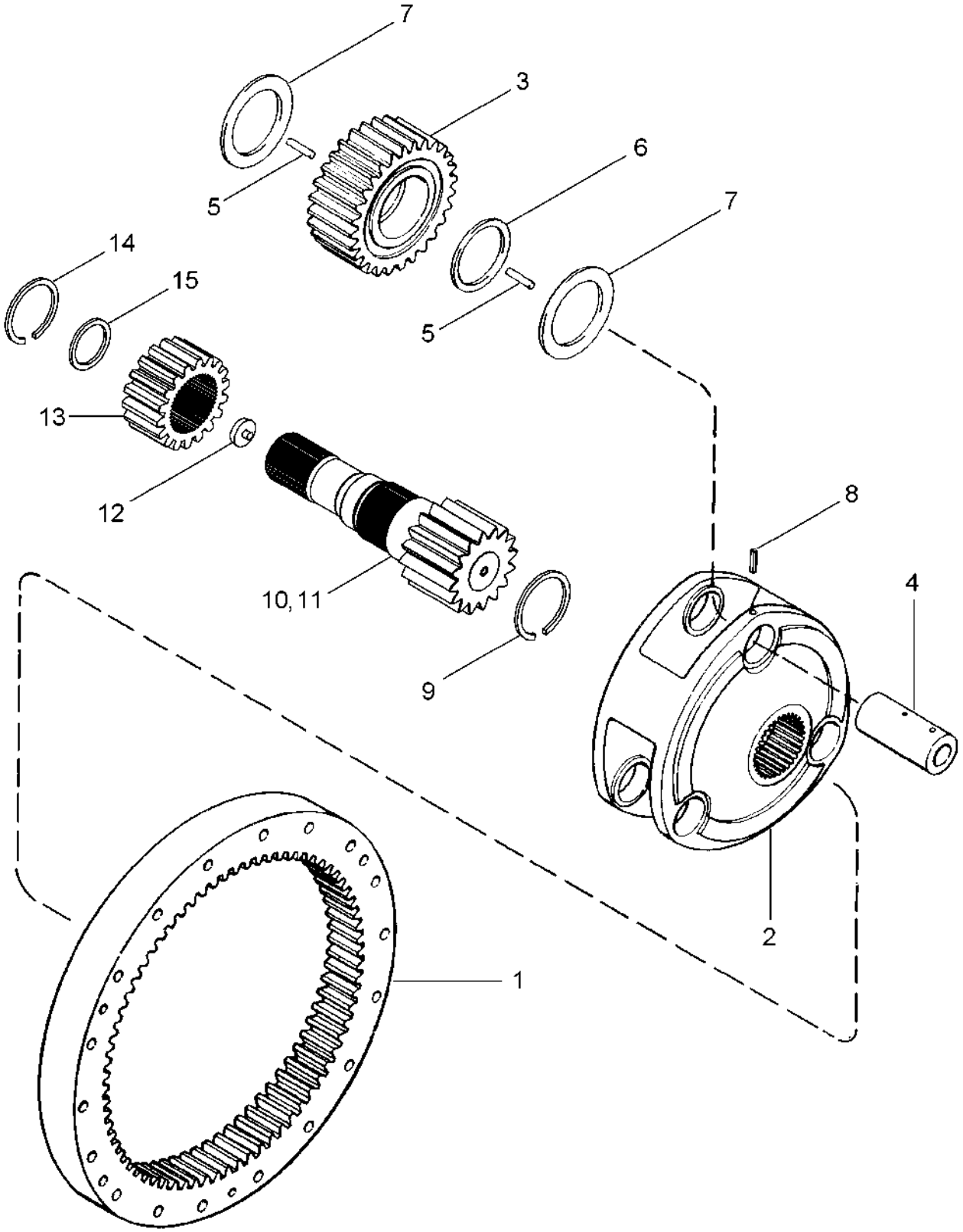

EJE TRASERO - PLANETARIO, MX210, MX230 Y MX255
PLANETÁRIO DO EIXO TRASEIRO, MODELOS MX210, MX230 E MX255
ACHTERAS - PLANETAIR, MX210, MX230 EN MX255
BAGAKSEL - PLANETGEAR, MX210, MX230 OG MX255

R	N	P.N.	MOD	Q	Description Denominacion	Descrizione Denominação	Description Beschrijving	Bezeichnung Beskrivelse	L.C.
1		1259670C2		2	GEAR, RING CORONA DENTADA	CORONA DENTATA CREMALHEIRA	COURONNE DENTÉE KROONWIEL	ZAHNKRANZ TANDKRANS	297C
2		1349345C1		2	CARRIER EJE DE SATELITES	PORTASATELLITI PORTA-SATELITES	PILIER, SOUTIEN SATELIETDRAGER	PLANETENTRÄGER SPIDSHJULSHOLDER	196P
3		1349350C2		6	PINION PINON	PIGNONE PINHAO	PIGNON PINION	RITZEL PINION	P045
4		1349346C2		6	SHAFT EJE	ALBERO VEIO	ARBRE AS	WELLE AKSEL	016A
5		1349347C1		348	BEARING, NEEDLE RODAMIENTO DE RPDIL	CUSCINETTO A RULLINI ROLAMENTO	ROULEMENT A AIGUILLE LAGER, NAALD	NADELLAGER NAALELEJE	344C
6		1349348C1		6	RING, THRUST ANILLO DE EMPUJE	ANELLO, DI SPINTA ANEL DE PRESSAO	BAGUE DE POUSSÉE RING, THRUST	DRUCKKRAFTRING TRYKRING	P618
7		1997886C1		12	WASHER, THRUST ARANDELA DE TOPE	RONDELLA, DI SPINTA ANILHA DE ENCOSTO	RONDELLE DE BUTÉE SLUITRING DRUKPLAAT	DRUCKSCHEIBE TRYKSKIVE	023R
8		838-3826		6	PIN 8 x 26 mm PERNO	PERNO PERNO	AXE PEN	BOLZEN STIFT	080P
9		101-11350		2	SNAP RING No. 350 ANILLO DE CIERRE	ANELLO ELASTICO ANEL TRAVA	ANNEAU-D'ARRET SNAP RING	SICHERUNGSRING SNAP RING	P345
10		94651C2		1	SHAFT Left Hand EJE	ALBERO VEIO	ARBRE AS	WELLE AKSEL	016A
11		94652C3		1	SHAFT Right Hand, Inc. 12 EJE	ALBERO VEIO	ARBRE AS	WELLE AKSEL	016A
12		1981327C1		1	PLUG TAPÓN	TAPPO BUJÃO	BOUCHON PLUG	STOPFEN PROP	050T
13		1259732C1		2	HUB CUBO	MOZZO CUBO	MOYEU NAAF	NABE NAV	135M
14		101-11275		2	SNAP RING No. 275 ANILLO DE CIERRE	ANELLO ELASTICO ANEL TRAVA	ANNEAU-D'ARRET SNAP RING	SICHERUNGSRING SNAP RING	P345
15		1259753C1		2	WASHER ARANDELA	ROSETTA PIANA ANILHA	RONDELLE SLUITRING	BEILAGSCHEIBE FLADSKIVE	131R

06-35		p1	11/04

REAR AXLE - PLANETARY, MX285
ASSALE POSTERIORE - RIDUTTORI FINALI EPICICLOIDALI, MX285
PLANÉTAIRE DE L'ESSIEU ARRIÈRE, MX285
HINTERACHSEN-PLANETENGETRIEBE DER SERIE MX285

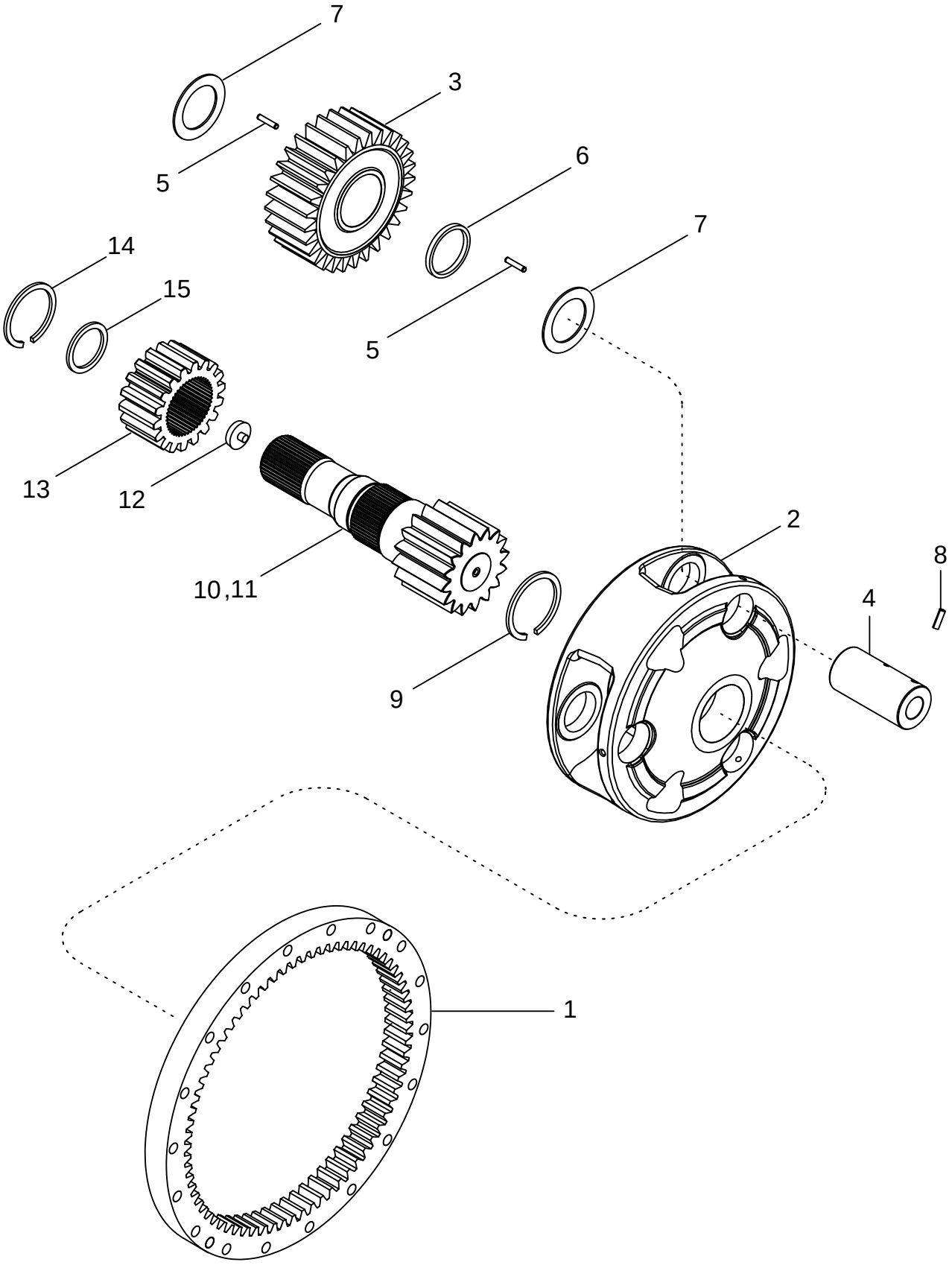

EJE TRASERO - PLANETARIO, MX285
PLANETÁRIO DO EIXO TRASEIRO, MODELO MX285
ACHTERAS - PLANETAIR, MX285
BAGAKSEL - PLANETGEAR, MX285

R	N	P.N.	MOD	Q	Description Denominacion	Descrizione Denominação	Description Beschrijving	Bezeichnung Beskrivelse	L.C.
1		310695A1		2	GEAR, RING CORONA DENTADA	CORONA DENTATA CREMALHEIRA	COURONNE DENTÉE KROONWIEL	ZAHNKRANZ TANDKRANS	297C
2		388366A1		2	CARRIER, GEARS PORTA SATELITE	PIGNONE TRASPORT PORTA SATELITES	PORTE-PLANETAIRE CARRIER, GEARS	ZAHNRADTRÄGER CARRIER, GEARS	P732
3		310694A2		6	GEAR, PLANETARY PINON PLANETARIO	PLANETARIO PLANETARIO	PLANETAIRE PLANEETWIEL	PLANETENRAD KRONHJUL	145P
4		310697A3		6	SHAFT EJE	ALBERO VEIO	ARBRE AS	WELLE AKSEL	016A
5		1349347C1		396	BEARING, NEEDLE RODAMIENTO DE RPDIL	CUSCINETTO A RULLINI ROLAMENTO	ROULEMENT A AIGUILLE LAGER, NAALD	NADELLAGER NAALELEJE	344C
6		310728A2	a	6	RING Metal ANILLO	ANELLO ANEL	ANNEAU RING	RING RING	045A
6		86985634	b	6	SPACER, RING Nylon CASQUILLO ESPACIADC	ANELLO, DISTANZIALE ANEL ESPACADOR	BAGUE D'EPAISSEUR SPACER, RING	ZWISCHENRING SPACER, RING	Z296
7		385900A1		12	WASHER ARANDELA	ROSETTA PIANA ANILHA	RONDELLE SLUITRING	BEILAGSCHEIBE FLADSKIVE	131R
8		838-3826		6	PIN 8 x 26 mm PERNO	PERNO PERNO	AXE PEN	BOLZEN STIFT	080P
9		101-11350		2	SNAP RING No. 350 ANILLO DE CIERRE	ANELLO ELASTICO ANEL TRAVA	ANNEAU-D'ARRET SNAP RING	SICHERUNGSRING SNAP RING	P345
10		395481A1		1	SHAFT, GEAR 16T, Left Hand EJE DE PINIONS	ALBERO, INGRANAGGIO EIXO PINHAO	ARBRE DE PIGNONS SHAFT, GEAR	ZAHNRADWELLE GEARAKSEL	P722
11		395481A1		1	SHAFT, GEAR 16T, Right Hand EJE DE PINIONS	ALBERO, INGRANAGGIO EIXO PINHAO	ARBRE DE PIGNONS SHAFT, GEAR	ZAHNRADWELLE GEARAKSEL	P722
12		1981327C1		1	PLUG Sun Shaft Locator, Right Hand Shaft Only TAPÓN	TAPPO BUJÃO	BOUCHON PLUG	STOPFEN PROP	050T
13		1259732C1		2	HUB CUBO	MOZZO CUBO	MOYEU NAAF	NABE NAV	135M
14		101-11275		2	SNAP RING No. 275 ANILLO DE CIERRE	ANELLO ELASTICO ANEL TRAVA	ANNEAU-D'ARRET SNAP RING	SICHERUNGSRING SNAP RING	P345
15		1259753C1		2	WASHER ARANDELA	ROSETTA PIANA ANILHA	RONDELLE SLUITRING	BEILAGSCHEIBE FLADSKIVE	131R

(a) BSN AJB0228408
(b) ASN AJB0228408

REAR AXLE - 4 X 98 INCH, MX210 AND MX230
ASSALE POSTERIORE - 4 X 98 IN., MX210 E MX230
ESSIEU ARRIÈRE - 4 X 98 POUCES, MX210 ET MX230
4 X 98 IN.-HINTERACHSE DER SERIEN MX210 UND MX230

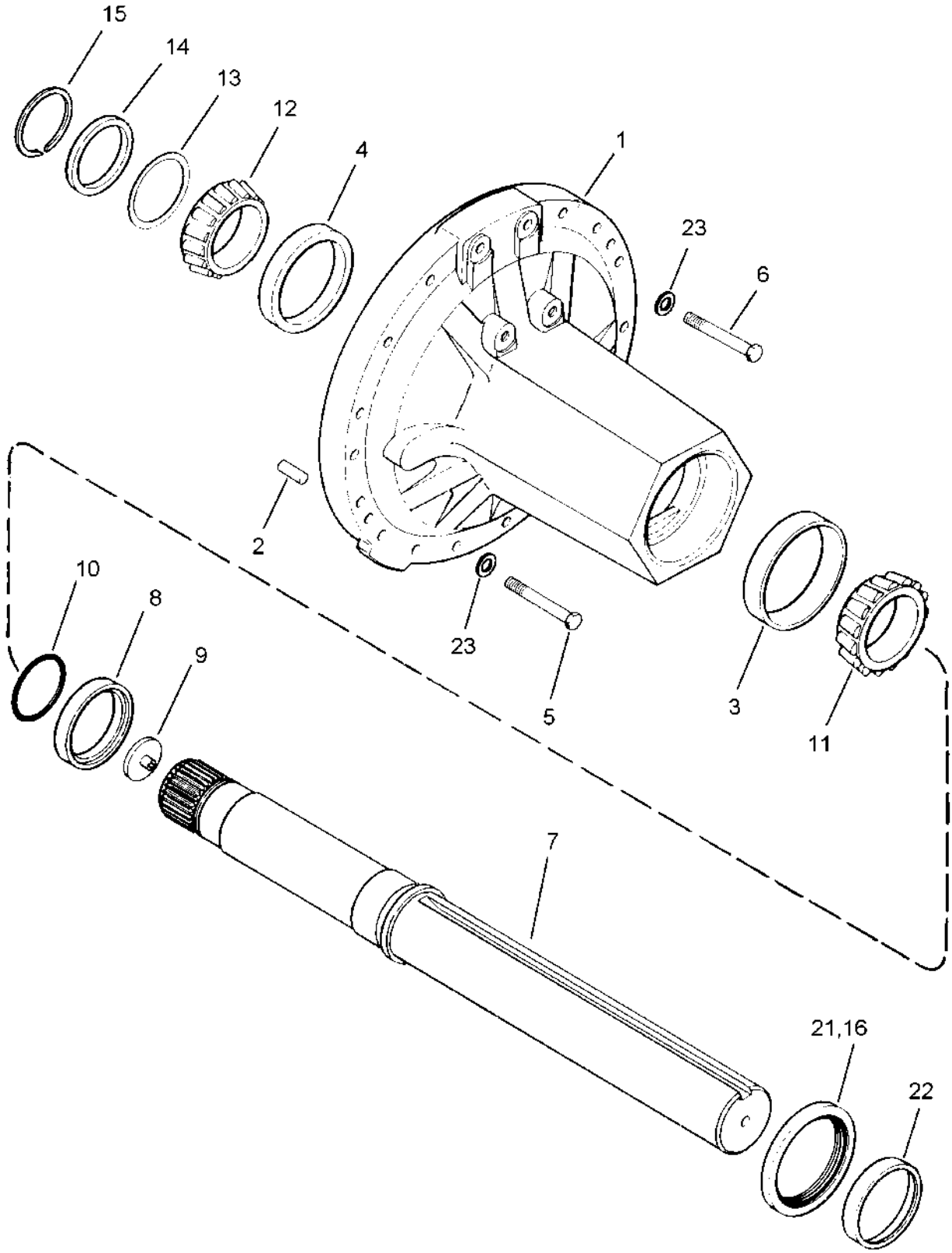

EJE TRASERO - 4 X 98 PULG., MX210 Y MX230
EIXO TRASEIRO - 4 X 98 POLEGADAS, MODELOS MX210 E MX230
ACHTERAS - 4 X 98 INCH, MX210 EN MX230
BAGAKSEL - 4 X 98 IN., MX210 OG MX230

R	N	P.N.	MOD	Q	Description Denominacion	Descrizione Denominação	Description Beschrijving	Bezeichnung Beskrivelse	L.C.
1		1968489C1		2	CARRIER Inc. 2 - 4 EJE DE SATELITES	PORTASATELLITI PORTA-SATELITES	PILIER, SOUTIEN SATELIETDRAGER	PLANETENTRÄGER SPIDSHJULSHOLDER	196P
2		837-16040		2	DOWEL 16 x 40 mm PITON	GRANO GUIA	PION STEL PEN	PAßTIFT DYVEL	P176
3		630899C1		1	BEARING, CUP PISTA DE RODAMIENTO	ANELLO CUSCINETTO ANILHA ROLAMENTO	CUVETTE ROULEMENT LAGER, CUP	LAGERSCHALE LEJERING	062A
4		619697C1		1	BEARING, CUP PISTA DE RODAMIENTO	ANELLO CUSCINETTO ANILHA ROLAMENTO	CUVETTE ROULEMENT LAGER, CUP	LAGERSCHALE LEJERING	062A
5		828-16150		32	SCREW M16 x 150; 10.9 TORNILLO	VITE PARAFUSO	VIS SCHROEF	SCHRAUBE SKRUE	7450
6		828-16170		4	SCREW M16 x 170; 10.9 TORNILLO	VITE PARAFUSO	VIS SCHROEF	SCHRAUBE SKRUE	7450
7		1968339C4		2	SHAFT Inc. 8, 9 EJE	ALBERO VEIO	ARBRE AS	WELLE AKSEL	016A
8		1968334C1		1	BUSHING CASQUILLO	BOCCOLA CASQUILHO	BAGUE LAGERBUS	BUECHSE BOESNING	095B
9		1981270C1		1	INSERT INTRODUCTOR	INSERTO POSTICO	INSERT TUSSENSTUK	EINSATZ INDSATS	055I
10		238-5241		2	O-RING 3-7/8 ID x 1/8 JUNTA HERMETICA	ANELLO TOROIDALE ANEL O	JOINT TORIQUE O-RING	O-RING O-RING	7176
11		630874C1		2	BEARING, CONE CONO	CONO DEL CUSCINETTO CONE	CONE DE ROULEMENT KEGEL	LAGERKONUS LEJEKONUS	237C
12		123869R1		2	BEARING, CONE CONO	CONO DEL CUSCINETTO CONE	CONE DE ROULEMENT KEGEL	LAGERKONUS LEJEKONUS	237C
13		143921C1		AR	SHIM 0,760 mm SUPLEMENTO	SPESSORE CALCO DE AFINACAO	CALE D'EPAISSEUR DIKTEPLAAT	EINSTELLSCHEIBCHEN MELLEMLAEG	198S
13		143922C1		AR	SHIM 0,300 mm SUPLEMENTO	SPESSORE CALCO DE AFINACAO	CALE D'EPAISSEUR DIKTEPLAAT	EINSTELLSCHEIBCHEN MELLEMLAEG	198S
13		143923C1		AR	SHIM 0,13 mm SUPLEMENTO	SPESSORE CALCO DE AFINACAO	CALE D'EPAISSEUR DIKTEPLAAT	EINSTELLSCHEIBCHEN MELLEMLAEG	198S
13		143924C1		AR	SHIM 0,10 mm SUPLEMENTO	SPESSORE CALCO DE AFINACAO	CALE D'EPAISSEUR DIKTEPLAAT	EINSTELLSCHEIBCHEN MELLEMLAEG	198S
13		143925C1		AR	SHIM 0,076 mm SUPLEMENTO	SPESSORE CALCO DE AFINACAO	CALE D'EPAISSEUR DIKTEPLAAT	EINSTELLSCHEIBCHEN MELLEMLAEG	198S
14		124744C1		2	RING ANILLO	ANELLO ANEL	ANNEAU RING	RING RING	045A
15		1277020C2		2	RING ANILLO	ANELLO ANEL	ANNEAU RING	RING RING	045A
16		84842C1		2	SEAL ASSY. SELLO (CONJUNTO)	GRUPPO TENUTA VEDADOR CONJUNTO	JOINT-D'ETANCH. ASS. SEAL ASSY.	DICHTRING (KPLT.) SEAL ASSY.	P558
		94547C1		2	KIT, GASKET Inc. 21, 22 EMPAQUE DE JUNTAS	CONFEZIONE, GUARNIZ JOGO DE JUNTAS	JEU JOINTS ETANCHEIT KIT, GASKET	DICHTUNGSSATZ PAKNINGS PAKKE	3740
21		92689C1		1	SEAL Oversize ANILLO DE CIERRE	ANELLO DI TENUTA ANEL DE VEDACAO	JOINT DICHTINGSRING	DICHTUNG PAKNINGSRING	132A
22		92687C1		1	SLEEVE MANGUITO	MANICOTTO TUBO	MANCHON SLEEVE	MUFFE TRYKLEJE, KOBLING	031M
23		896-12016		36	WASHER 17,5 x 30 x 4 mm ARANDELA	ROSETTA PIANA ANILHA	RONDELLE SLUITRING	SCHEIBE FLADSKIVE	9720

REAR AXLE - 4 X 98 INCH, MX255 AND MX285
ASSALE POSTERIORE - 4 X 98 IN., MX255 E MX285
ESSIEU ARRIÈRE - 4 X 98 POUCES, MX255 ET MX285
4 X 98 IN.-HINTERACHSE DER SERIEN MX255 UND MX285

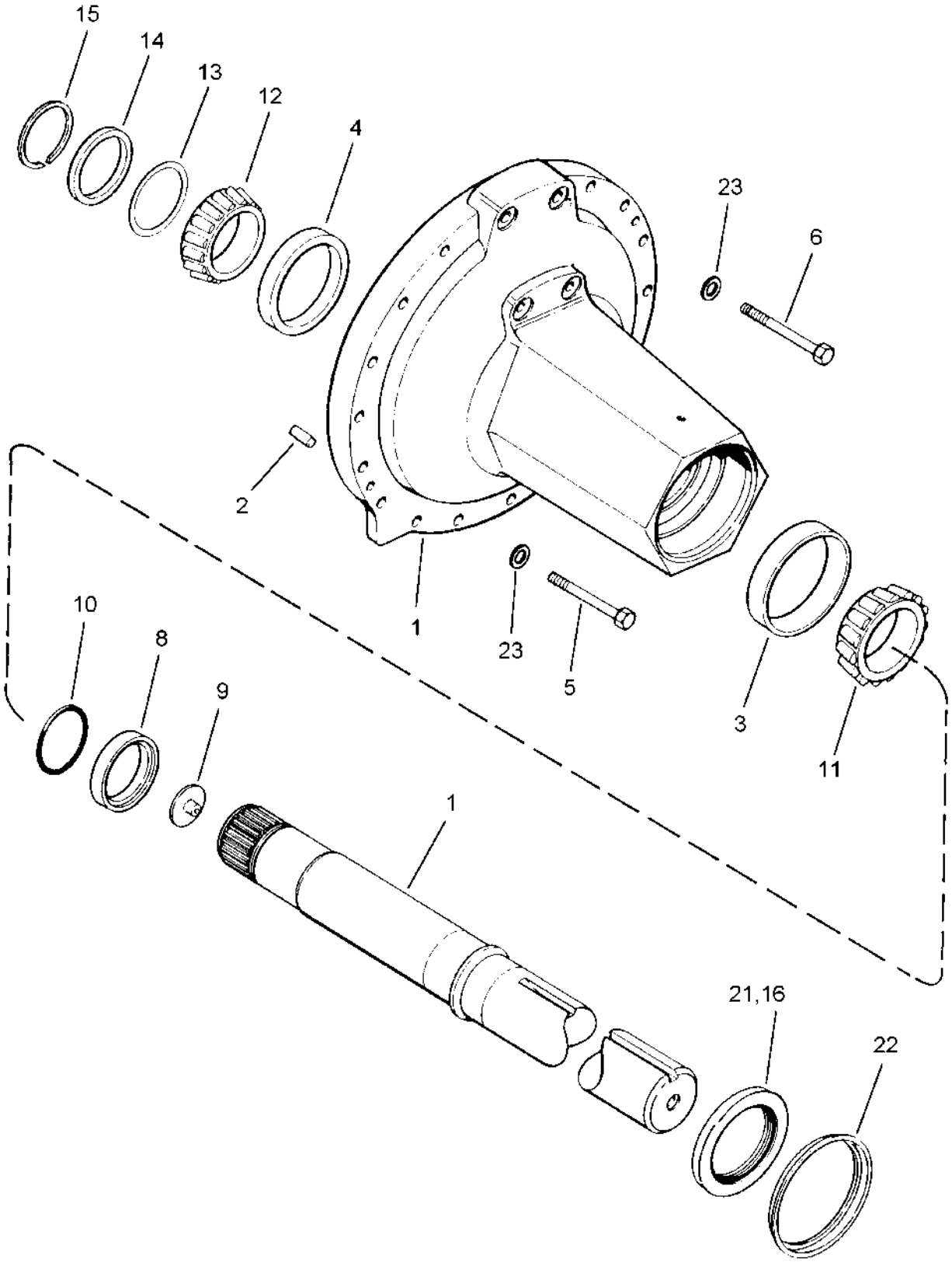

EJE TRASERO - 4 X 98 PULG., MX255 Y MX285
EIXO TRASEIRO - 4 X 98 POLEGADAS, MODELOS MX255 E MX285
ACHTERAS - 4 X 98 IN., MX255 EN MX285
BAGAKSEL - 4 X 98 IN., MX255 OG MX285

R	N	P.N.	MOD	Q	Description Denominacion	Descrizione Denominação	Description Beschrijving	Bezeichnung Beskrivelse	L.C.
1		1342268C1		2	CARRIER Inc. 2 - 4 EJE DE SATELITES	PORTASATELLITI PORTA-SATELITES	PILIER, SOUTIEN SATELIETDRAGER	PLANETENTRÄGER SPIDSHJULSHOLDER	196P
2		837-16040		2	DOWEL 16 x 40 mm PITON	GRANO GUIA	PION STEL PEN	PAßTIFT DYVEL	P176
3		1975500C1		1	BEARING, CUP PISTA DE RODAMIENTO	ANELLO CUSCINETTO ANILHA ROLAMENTO	CUVETTE ROULEMENT LAGER, CUP	LAGERSCHALE LEJERING	062A
4		619697C1		1	BEARING, CUP PISTA DE RODAMIENTO	ANELLO CUSCINETTO ANILHA ROLAMENTO	CUVETTE ROULEMENT LAGER, CUP	LAGERSCHALE LEJERING	062A
5		828-16150		32	SCREW M16 x 150; 10.9 TORNILLO	VITE PARAFUSO	VIS SCHROEF	SCHRAUBE SKRUE	7450
6		828-16170		4	SCREW M16 x 170; 10.9 TORNILLO	VITE PARAFUSO	VIS SCHROEF	SCHRAUBE SKRUE	7450
7		118654A3		2	AXLE Inc. 8, 9 EJE	ASSALE EIXO	ESSIEU AS	ACHSE AKSEL	087A
8		1963837C1		1	BUSHING CASQUILLO	BOCCOLA CASQUILHO	BAGUE LAGERBUS	BUECHSE BOESNING	095B
9		1981270C1		1	INSERT INTRODUCTOR	INSERTO POSTICO	INSERT TUSSENSTUK	EINSATZ INDSATS	055I
10		238-5155		2	O-RING 4 ID x 3/32 JUNTA HERMETICA	ANELLO TOROIDALE ANEL O	JOINT TORIQUE O-RING	O-RING O-RING	7176
11		1975499C1		2	BEARING, CONE CONO	CONO DEL CUSCINETTO CONE	CONE DE ROULEMENT KEGEL	LAGERKONUS LEJEKONUS	237C
12		1963841C1		2	BEARING, CONE CONO	CONO DEL CUSCINETTO CONE	CONE DE ROULEMENT KEGEL	LAGERKONUS LEJEKONUS	237C
13		143921C1		AR	SHIM 0,760 mm SUPLEMENTO	SPESSORE CALCO DE AFINACAO	CALE D'EPAISSEUR DIKTEPLAAT	EINSTELLSCHEIBCHEN MELLEMLAEG	198S
13		143922C1		AR	SHIM 0,300 mm SUPLEMENTO	SPESSORE CALCO DE AFINACAO	CALE D'EPAISSEUR DIKTEPLAAT	EINSTELLSCHEIBCHEN MELLEMLAEG	198S
13		143923C1		AR	SHIM 0,13 mm SUPLEMENTO	SPESSORE CALCO DE AFINACAO	CALE D'EPAISSEUR DIKTEPLAAT	EINSTELLSCHEIBCHEN MELLEMLAEG	198S
13		143924C1		AR	SHIM 0,10 mm SUPLEMENTO	SPESSORE CALCO DE AFINACAO	CALE D'EPAISSEUR DIKTEPLAAT	EINSTELLSCHEIBCHEN MELLEMLAEG	198S
13		143925C1		AR	SHIM 0,076 mm SUPLEMENTO	SPESSORE CALCO DE AFINACAO	CALE D'EPAISSEUR DIKTEPLAAT	EINSTELLSCHEIBCHEN MELLEMLAEG	198S
14		124744C1		2	RING ANILLO	ANELLO ANEL	ANNEAU RING	RING RING	045A
15		1277020C2		2	RING ANILLO	ANELLO ANEL	ANNEAU RING	RING RING	045A
16		1963839C1		2	SEAL ANILLO DE CIERRE	ANELLO DI TENUTA ANEL DE VEDACAO	JOINT DICHTINGSRING	DICHTUNG PAKNINGSRING	132A
		1349182C1		2	KIT, GASKET Inc. 21, 22 EMPAQUE DE JUNTAS	CONFEZIONE, GUARNIZ JOGO DE JUNTAS	JEU JOINTS ETANCHEIT KIT, GASKET	DICHTUNGSSATZ PAKNINGS PAKKE	3740
21		1349183C1		1	SEAL, OIL Oversize JUNTA DE ACEITE	PARAOLIO VEDADOR DE OLEO	JOINT D'HUILE OIL-SEAL	ÖLDICHTUNG OLIESEGL	P278
22		1349184C1		1	SLEEVE MANGUITO	MANICOTTO TUBO	MANCHON SLEEVE	MUFFE TRYKLEJE, KOBLING	031M
23		896-12016		36	WASHER 17,5 x 30 x 4 mm ARANDELA	ROSETTA PIANA ANILHA	RONDELLE SLUITRING	SCHEIBE FLADSKIVE	9720

TRANSMISSION - PUMP DRIVE
TRASMISSIONE - COMANDO DELLA POMPA
TRANSMISSION - ENTRAÎNEMENT DE LA POMPE
GETRIEBEPUMPENANTRIEB

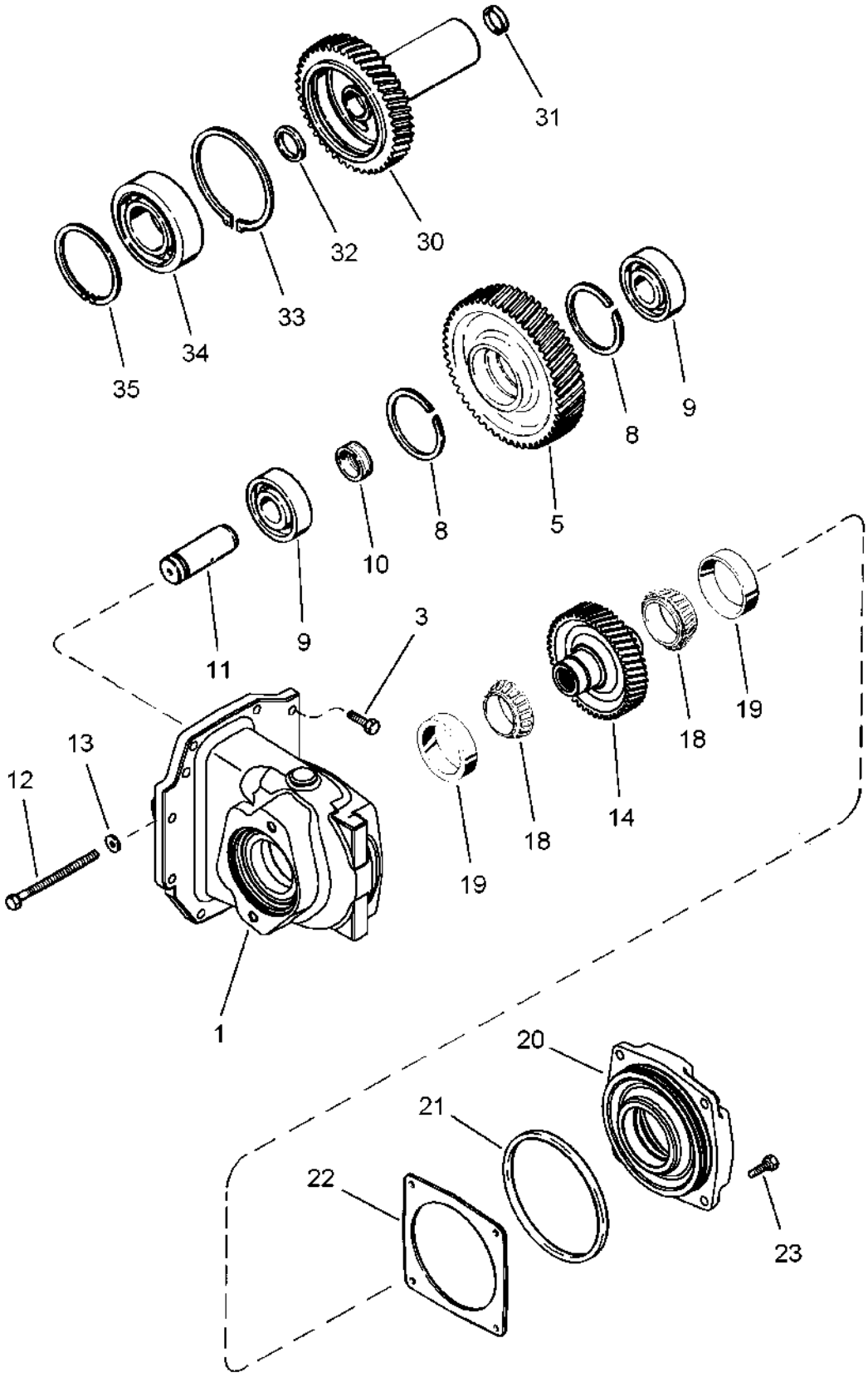

TRANSMISIÓN - ACCIONAMIENTO DE LA BOMBA
TRANSMISSÃO - TRANSMISSÃO DA BOMBA
TRANSMISSIE - POMPAANDRIJVING
TRANSMISSION - PUMPEDREV

R	N	P.N.	MOD	Q	Description Denominacion	Descrizione Denominação	Description Beschrijving	Bezeichnung Beskrivelse	L.C.
1		389550A1		1	HOUSING CAVIDAD	ALLOGGIAMENTO ALOJAMENTO	CARTER HUIS	GEHÄUSE HUS	014V
3		613-10035		8	SCREW M10 x 35 TORNILLO	VITE PARAFUSO	VIS SCHROEF	SCHRAUBE SKRUE	7450
5		220199A1		1	PINION PINON	PIGNONE PINHAO	PIGNON PINION	RITZEL PINION	P045
8		472163R1		2	RING ANILLO	ANELLO ANEL	ANNEAU RING	RING RING	045A
9		394326A1		2	BEARING, BALL RODAMIENTO DE BOLAS	CUSCINETTO A SFERA ROLAMENTO	ROULEMENT A BILLES LAGER, KOGEL	KUGELLAGER KUGLELEJE	343C
10		93316C1		1	SPACER SEPARADOR	DISTANZIALE ESPACADOR	ENTRETOISE AFSTANDSRING	DISTANZSTÜCK AFSTANDSSTYKKE	075D
11		1286151C1		1	SHAFT EJE	ALBERO VEIO	ARBRE AS	WELLE AKSEL	016A
12		813-10130		1	SCREW M10 x 130 TORNILLO	VITE PARAFUSO	VIS SCHROEF	SCHRAUBE SKRUE	7450
13		896-12010		1	WASHER 11 x 21 x 2,5 mm ARANDELA	ROSETTA PIANA ANILHA	RONDELLE SLUITRING	SCHEIBE FLADSKIVE	9720
14		404173A1		1	GEAR, DRIVEN PINON CONDUCIDO	INGRANAGGIO CONDOT CARRETO MOVIDO	PIGNON CONDUIT AANGEDREVEN TANDW	ANTRIEBSZAHNRAD DREVET TANDHJUL	051I
18		399933C91		2	BEARING, CONE CONO	CONO DEL CUSCINETTO CONE	CONE DE ROULEMENT KEGEL	LAGERKONUS LEJEKONUS	237C
19		399934C1		2	BEARING, CUP PISTA DE RODAMIENTO	ANELLO CUSCINETTO ANILHA ROLAMENTO	CUVETTE ROULEMENT LAGER, CUP	LAGERSCHALE LEJERING	062A
20		405664A2		1	CAGE JAULA	GABBIA GAIOLA	CAGE CAGE	KÄFIG KUGLEHOLDER	1270
21		238-5257		1	O-RING 5-7/8 ID x 1/8 JUNTA HERMETICA	ANELLO TOROIDALE ANEL O	JOINT TORIQUE O-RING	O-RING O-RING	7176
22		120946C1		AR	SHIM 0,08 mm SUPLEMENTO	SPESSORE CALCO DE AFINACAO	CALE D'EPAISSEUR DIKTEPLAAT	EINSTELLSCHEIBCHEN MELLEMLAEG	198S
22		120947C1		AR	SHIM 0,10 mm SUPLEMENTO	SPESSORE CALCO DE AFINACAO	CALE D'EPAISSEUR DIKTEPLAAT	EINSTELLSCHEIBCHEN MELLEMLAEG	198S
22		120948C1		AR	SHIM 0,13 mm SUPLEMENTO	SPESSORE CALCO DE AFINACAO	CALE D'EPAISSEUR DIKTEPLAAT	EINSTELLSCHEIBCHEN MELLEMLAEG	198S
22		120949C1		AR	SHIM 0,30 mm SUPLEMENTO	SPESSORE CALCO DE AFINACAO	CALE D'EPAISSEUR DIKTEPLAAT	EINSTELLSCHEIBCHEN MELLEMLAEG	198S
22		149011C1		AR	SHIM 0,76 mm SUPLEMENTO	SPESSORE CALCO DE AFINACAO	CALE D'EPAISSEUR DIKTEPLAAT	EINSTELLSCHEIBCHEN MELLEMLAEG	198S
23		613-10035		4	SCREW M10 x 35 TORNILLO	VITE PARAFUSO	VIS SCHROEF	SCHRAUBE SKRUE	7450
30		220560A1		1	PINION PINON	PIGNONE PINHAO	PIGNON PINION	RITZEL PINION	P045
31		238-5223		1	O-RING 1-5/8 ID x 1/8 JUNTA HERMETICA	ANELLO TOROIDALE ANEL O	JOINT TORIQUE O-RING	O-RING O-RING	7176
32		1286023C1		1	RING ANILLO	ANELLO ANEL	ANNEAU RING	RING RING	045A
33		100-11237		1	RING, SNAP No. 237 ANILLO DE RESORTE	ANELLO ELASTICO ANEL	ANNEAU D'ARRÊT RING, SNAP	SICHERUNGSRING LÅSERING	054A

TRANSMISSION - PUMP DRIVE
TRASMISSIONE - COMANDO DELLA POMPA
TRANSMISSION - ENTRAÎNEMENT DE LA POMPE
GETRIEBEPUMPENANTRIEB

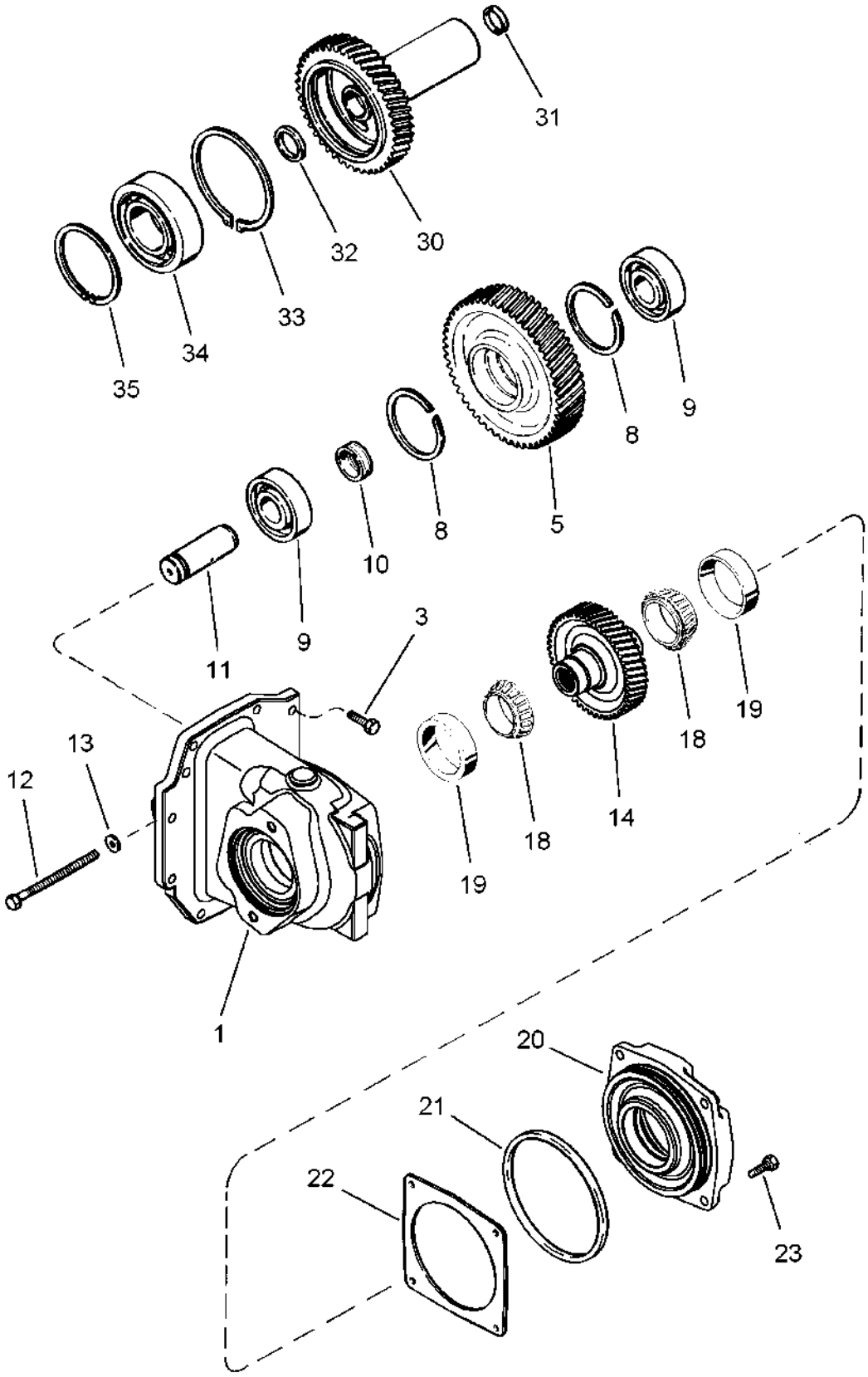

TRANSMISIÓN - ACCIONAMIENTO DE LA BOMBA
TRANSMISSÃO - TRANSMISSÃO DA BOMBA
TRANSMISSIE - POMPAANDRIJVING
TRANSMISSION - PUMPEDREV

R	N	P.N.	MOD	Q	Description Denominacion	Descrizione Denominação	Description Beschrijving	Bezeichnung Beskrivelse	L.C.
34		ST269A		1	BEARING, BALL RODAMIENTO DE BOLAS	CUSCINETTO A SFERA ROLAMENTO	ROULEMENT A BILLES LAGER, KOGEL	KUGELLAGER KUGLELEJE	343C
35		101-21433		1	RING, SNAP No. 433 ANILLO DE RESORTE	ANELLO ELASTICO ANEL	ANNEAU D'ARRÊT RING, SNAP	SICHERUNGSRING LÅSERING	054A

06-39		p1	11/04

POWER TAKE OFF ASSEMBLY - INPUT SHAFT, BSN AJB0355026
GRUPPO DELLA PTO - ALBERO D'ENTRATA, BSN AJB0355026
PRISE DE FORCE - ARBRE D'ADMISSION, BSN AJB0355026
ZAPFWELLEN-EINGANGSWELLE, BSN AJB0355026

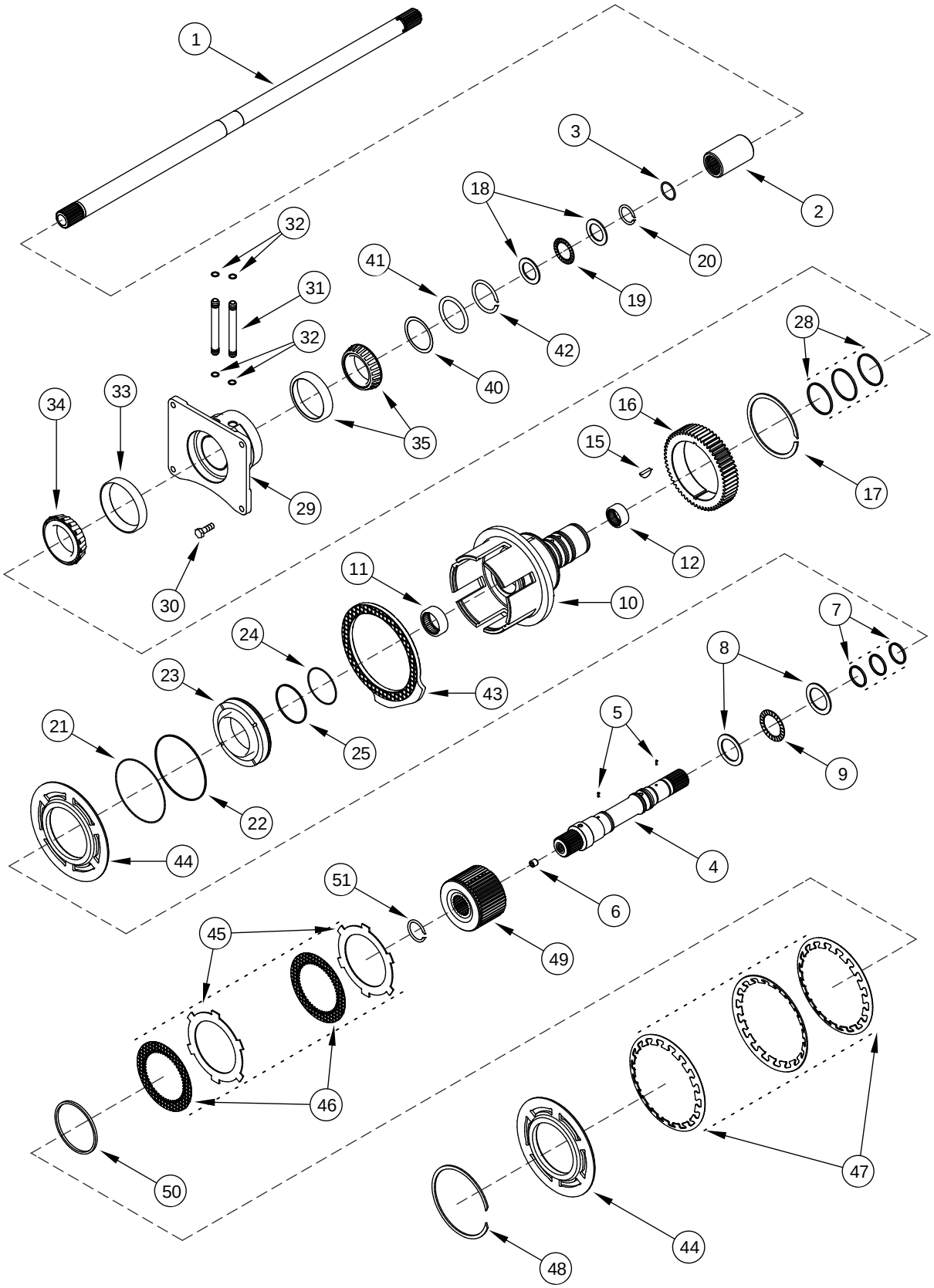

CONJUNTO DE LA TOMA DE FUERZA - EJE DE ENTRADA, BSN AJB0355026
CONJUNTO DA TOMADA DE FORÇA - EIXO DE ENTRADA, BSN AJB0355026
AFTAKAS - AANDRIJFAS, BSN AJB0355026
KRAFTOVERFØRINGSSAMLING - INDGANGSAKSEL, BSN AJB0355026

R	N	P.N.	MOD	Q	Description Denominacion	Descrizione Denominação	Description Beschrijving	Bezeichnung Beskrivelse	L.C.
1		198496A1		1	COUNTERSHAFT CONTRAARBOL	ALBERO SECONDARIO VEIO INTERMEDIARIO	ARBRE INTERMÉDIAIRE TUSSENAS	VORGELEGEWELLE FORLAGSAKSEL	013A
2		231241A1		1	COUPLING, SPLINED MANGUITO ACOPLAMIEI	ATTACO, SCANALATO ACOPLAMENTO DISTRIE	MANCHON CANNELÉE COUPLING, SPLINED	KEILVERBINDUNG MANGENOTKOBLING	Z224
3		238-6124		1	O-RING 1-1/4 ID x 3/32 JUNTA HERMETICA	ANELLO TOROIDALE ANEL O	JOINT TORIQUE O-RING	O-RING O-RING	7176
4		225800A2		1	SHAFT Inc. 5 EJE	ALBERO VEIO	ARBRE AS	WELLE AKSEL	016A
5		38-3605		2	PIN 3/32 x 5/16 PERNO	PERNO PERNO	AXE PEN	BOLZEN STIFT	080P
6		877-31212		1	SET SCREW M12 x 12 TORNILLO DE AJUSTE	VITE DI FERMO TORNILLO DE AJUSTE	VIS DE RÉGLAGE KRACHTBRON	STELLSCHRAUBE PINOLSKRUE	P327
7		225802A1		3	SEAL ANILLO DE CIERRE	ANELLO DI TENUTA ANEL DE VEDACAO	JOINT DICHTINGSRING	DICHTUNG PAKNINGSRING	132A
8		A54021		2	WASHER Thrust, 1-3/4 x 2-1/2 x 3/32 inch (44 x 64 x 2 mm) ARANDELA	ROSETTA PIANA ANILHA	RONDELLE SLUITRING	BEILAGSCHEIBE FLADSKIVE	131R
9		A54022		1	BEARING COJINETE	CUSCINETTO ROLAMENTO	ROULEMENT BEARING	LAGER BEARING	0600
10		323734A1		1	CARRIER Inc. 11, 12 EJE DE SATELITES	PORTASATELLITI PORTA-SATELITES	PILIER, SOUTIEN SATELIETDRAGER	PLANETENTRÄGER SPIDSHJULSHOLDER	196P
11		R21491		1	BEARING COJINETE	CUSCINETTO ROLAMENTO	ROULEMENT BEARING	LAGER BEARING	0600
12		38834		1	BEARING COJINETE	CUSCINETTO ROLAMENTO	ROULEMENT BEARING	LAGER BEARING	0600
15		126-124		1	WOODRUFF KEY 1/4 x 1 CHAVETA MEDIA-LUNA	LINGUETTA AMERICANA CHAVETA MEIA LUA	CLAVETTE DEMI-LUNE WOODRUFF KEY	WOODRUFF - KEIL SKIVEFEDER	P412
16		221203A1		1	PINION Gear, 57T PINON	PIGNONE PINHAO	PIGNON PINION	RITZEL PINION	P045
17		101-11475		1	RING No. 475 ANILLO	ANELLO ANEL	ANNEAU RING	RING RING	7175
18		1327732C1		2	WASHER 1-13/32 x 2 x 3/32 inch ARANDELA	ROSETTA PIANA ANILHA	RONDELLE SLUITRING	BEILAGSCHEIBE FLADSKIVE	131R
19		607146R91		1	BEARING COJINETE	CUSCINETTO ROLAMENTO	ROULEMENT BEARING	LAGER BEARING	0600
20		1259828C1		1	RING ANILLO	ANELLO ANEL	ANNEAU RING	RING RING	045A
21		1286083C1		1	O-RING JUNTA HERMETICA	ANELLO TOROIDALE O-RING	JOINT THORIQUE O-RING	DICHTRING O-RING	055A
22		1286079C1		1	RING ANILLO	ANELLO ANEL	ANNEAU RING	RING RING	045A
23		230166A1		1	PISTON EMBOLO	STANTUFFO PISTAO	PISTON ZUIGER	KOLBEN STEMPEL	235S
24		1286081C1		1	O-RING JUNTA HERMETICA	ANELLO TOROIDALE O-RING	JOINT THORIQUE O-RING	DICHTRING O-RING	055A
25		1286077C1		1	RING ANILLO	ANELLO ANEL	ANNEAU RING	RING RING	045A

06-39		p2	11/04

POWER TAKE OFF ASSEMBLY - INPUT SHAFT, BSN AJB0355026
GRUPPO DELLA PTO - ALBERO D'ENTRATA, BSN AJB0355026
PRISE DE FORCE - ARBRE D'ADMISSION, BSN AJB0355026
ZAPFWELLEN-EINGANGSWELLE, BSN AJB0355026

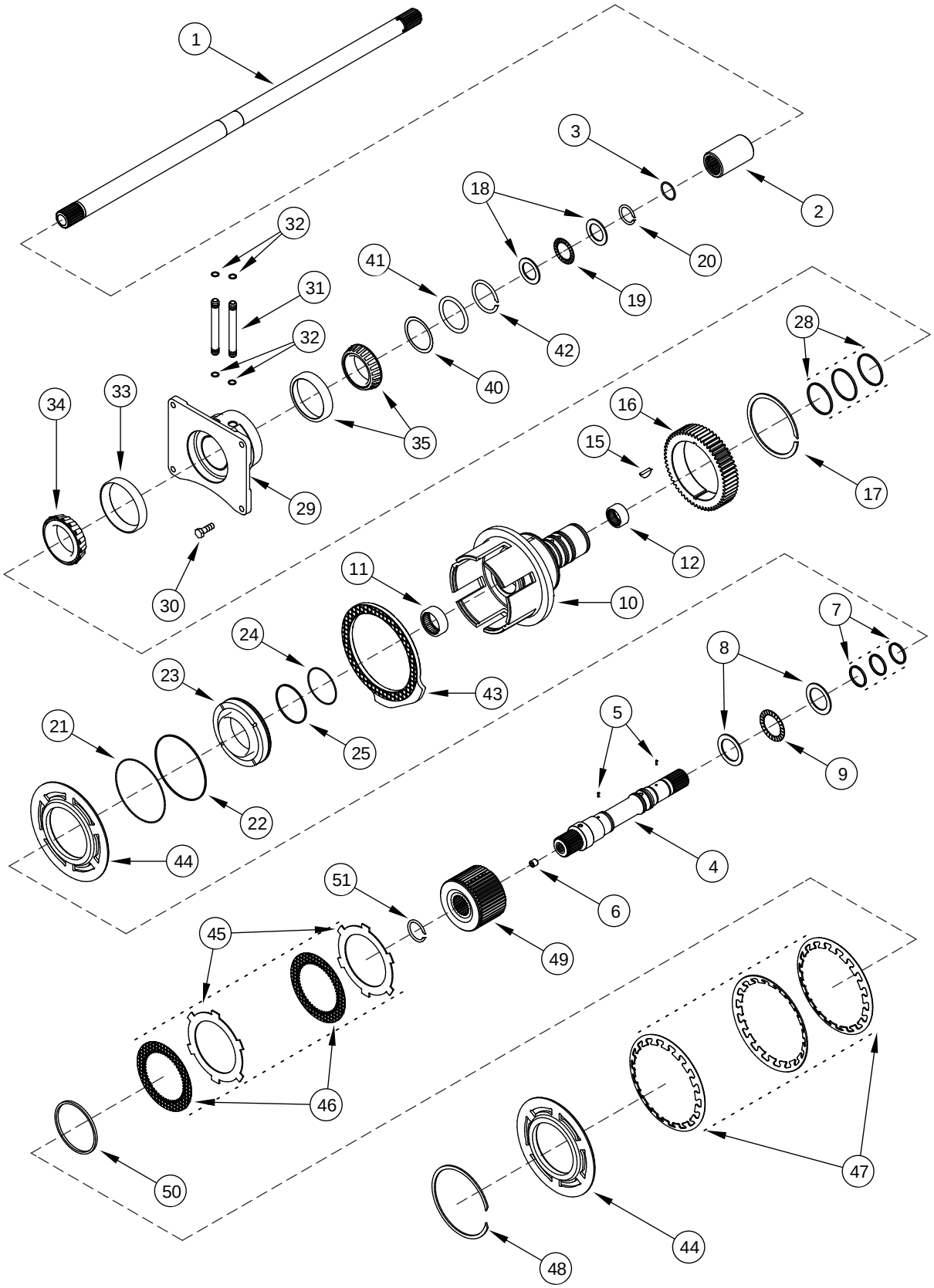

CONJUNTO DE LA TOMA DE FUERZA - EJE DE ENTRADA, BSN AJB0355026
CONJUNTO DA TOMADA DE FORÇA - EIXO DE ENTRADA, BSN AJB0355026
AFTAKAS - AANDRIJFAS, BSN AJB0355026
KRAFTOVERFØRINGSSAMLING - INDGANGSAKSEL, BSN AJB0355026

R	N	P.N.	MOD	Q	Description Denominacion	Descrizione Denominação	Description Beschrijving	Bezeichnung Beskrivelse	L.C.
28		1286026C1		3	RING ANILLO	ANELLO ANEL	ANNEAU RING	RING RING	045A
29		254105A1		1	CAGE JAULA	GABBIA GAIOLA	CAGE CAGE	KÄFIG KUGLEHOLDER	1270
30		628-10030		4	SCREW M10 x 30; 10.9 TORNILLO	VITE PARAFUSO	VIS SCHROEF	SCHRAUBE SKRUE	7450
31		413665A1		2	TUBE TUBO	TUBETTO TUBO	TUBE BUISJE	SCHLAUCH RØR	195T
32		238-5013		4	O-RING 7/16 ID x 1/16 JUNTA HERMETICA	ANELLO TOROIDALE ANEL O	JOINT TORIQUE O-RING	O-RING O-RING	7176
33		630694C1		1	BEARING, CONE CONO	CONO DEL CUSCINETTO CONE	CONE DE ROULEMENT KEGEL	LAGERKONUS LEJEKONUS	237C
34		630695C1		1	BEARING, CUP PISTA DE RODAMIENTO	ANELLO CUSCINETTO ANILHA ROLAMENTO	CUVETTE ROULEMENT LAGER, CUP	LAGERSCHALE LEJERING	062A
35		225805A1		1	BEARING, ROLLER RODAMIENTO DE RODIL	CUSCINETTO A RULLI ROLAMENTO ROLETES	ROULEMENT A ROULEA STEL RINGEN +0.8	ROLLEN LAGER RULLELEJE	346C
		253458A1		1	KIT, SHIM Inc. 40 JUEGO DE CALCES	KIT SPESSORE JUEGO DE CALCES	JEU DE CALES PACKAGE, SHIMS	EINSTELLSCHEIBEN, SC KIT, AFSTANDSSTYKKE	P688
40		249528A1		1	SHIM 0,203 mm SUPLEMENTO	SPESSORE CALCO DE AFINACAO	CALE D'EPAISSEUR DIKTEPLAAT	EINSTELLSCHEIBCHEN MELLEMLAEG	198S
40		199929A1		1	SHIM 0,356 mm SUPLEMENTO	SPESSORE CALCO DE AFINACAO	CALE D'EPAISSEUR DIKTEPLAAT	EINSTELLSCHEIBCHEN MELLEMLAEG	198S
40		199928A1		1	SHIM 0,508 mm SUPLEMENTO	SPESSORE CALCO DE AFINACAO	CALE D'EPAISSEUR DIKTEPLAAT	EINSTELLSCHEIBCHEN MELLEMLAEG	198S
40		199927A1		1	SHIM 0,559 mm SUPLEMENTO	SPESSORE CALCO DE AFINACAO	CALE D'EPAISSEUR DIKTEPLAAT	EINSTELLSCHEIBCHEN MELLEMLAEG	198S
40		222675A1		1	SHIM 0,635 mm SUPLEMENTO	SPESSORE CALCO DE AFINACAO	CALE D'EPAISSEUR DIKTEPLAAT	EINSTELLSCHEIBCHEN MELLEMLAEG	198S
41		199923A1		1	SPACER SEPARADOR	DISTANZIALE ESPACADOR	ENTRETOISE AFSTANDSRING	DISTANZSTÜCK AFSTANDSSTYKKE	075D
42		357194R1		1	RING ANILLO	ANELLO ANEL	ANNEAU RING	RING RING	045A
43		325666A1		1	BRAKE DISC DISCO DE FRENO	DISCO FRENO DISCO DE TRAVAO	DISQUE DE FREIN REMSCHIJF	BREMSSCHEIBE BREMSESKIVE	064D
44		239718A2		2	PLATE PLACA	PIASTRA CHAPA	PLAQUE PLAAT	PLATTE PLADE	105P
45		128114A1		10	DISC DISCO	DISCO DISCO	DISQUE SCHIJF	SCHEIBE NAV	060D
46		1997907C1		10	PLATE Friction PLACA	PIASTRA CHAPA	PLAQUE PLAAT	PLATTE PLADE	105P
47		225801A1		9	WASHER, SPECIAL ARANDELA FRENO	RONDELLA SPECIALE ARRUELA ESPECIAL	RONDELLE SPÉCIALE CILINDERPAKKING. KOF	SPEZIALSCHEIBE SPECIALSKIVE	Z333
48		1285996C1		1	RING, SNAP ANILLO DE RESORTE	ANELLO ELASTICO ANEL	ANNEAU D'ARRÊT RING, SNAP	SICHERUNGSRING LÅSERING	054A
49		221209A1		1	HOUSING, CLUTCH CÁRTER DE EMBRAGUE	COPPA DELLA FRIZIONE CAPA EMBREAGEM	CLOCHE D'EMBRAYAGE HOUSING, CLUTCH	KUPPLUNGSGEHÄUSE KOBLINGSHUS	P652
50		1286052C1		1	RING ANILLO	ANELLO ANEL	ANNEAU RING	RING RING	045A

POWER TAKE OFF ASSEMBLY - INPUT SHAFT, BSN AJB0355026
GRUPPO DELLA PTO - ALBERO D'ENTRATA, BSN AJB0355026
PRISE DE FORCE - ARBRE D'ADMISSION, BSN AJB0355026
ZAPFWELLEN-EINGANGSWELLE, BSN AJB0355026

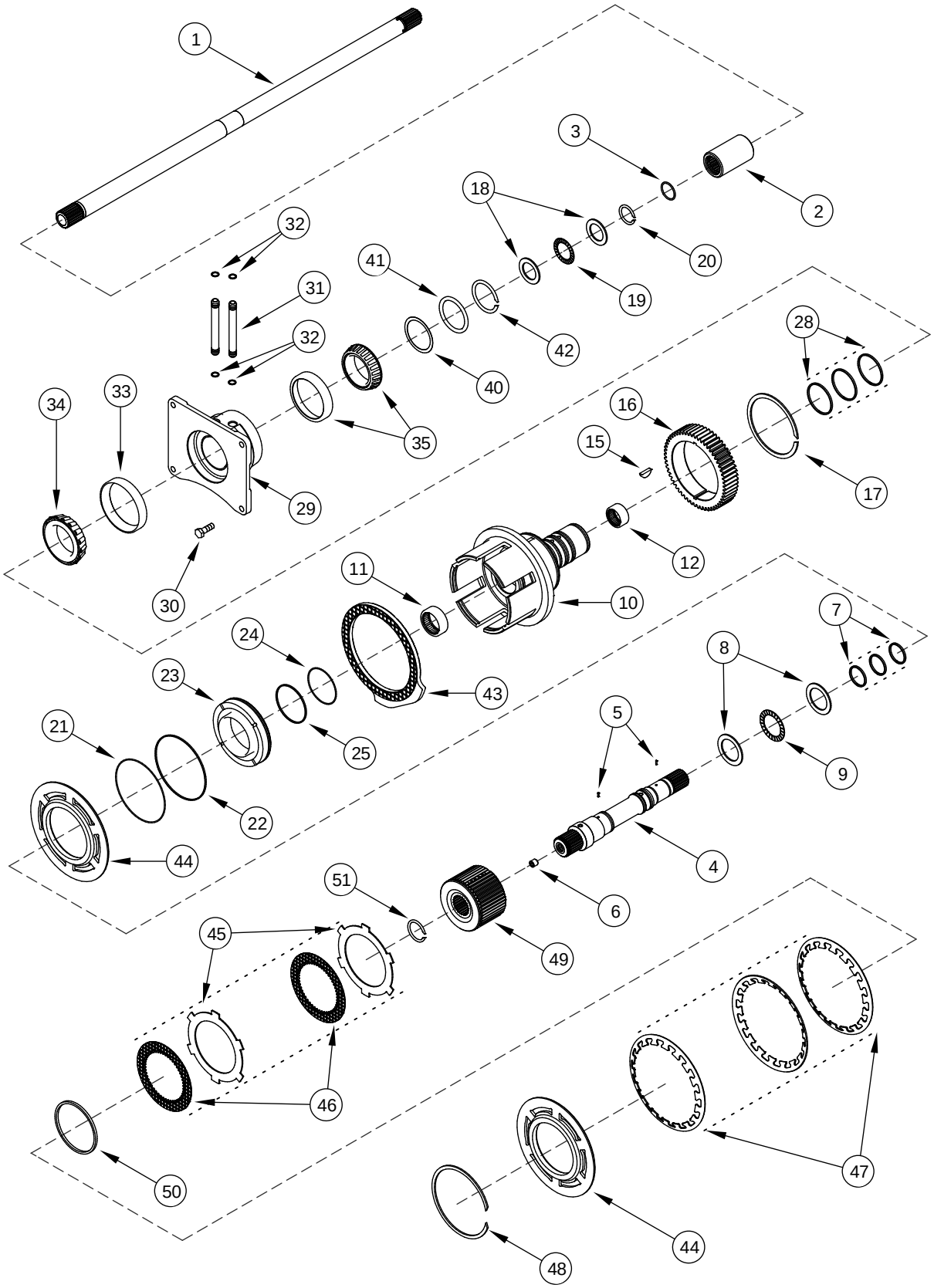

CONJUNTO DE LA TOMA DE FUERZA - EJE DE ENTRADA, BSN AJB0355026
CONJUNTO DA TOMADA DE FORÇA - EIXO DE ENTRADA, BSN AJB0355026
AFTAKAS - AANDRIJFAS, BSN AJB0355026
KRAFTOVERFØRINGSSAMLING - INDGANGSAKSEL, BSN AJB0355026

R	N	P.N.	MOD	Q	Description Denominacion	Descrizione Denominação	Description Beschrijving	Bezeichnung Beskrivelse	L.C.
51		555570R1		1	RING, SNAP ANILLO DE RESORTE	ANELLO ELASTICO ANEL	ANNEAU D'ARRÊT RING, SNAP	SICHERUNGSRING LÅSERING	054A

POWER TAKE OFF ASSEMBLY - INPUT SHAFT, ASN AJB0355026
GRUPPO DELLA PTO - ALBERO D'ENTRATA, ASN AJB0355026
PRISE DE FORCE - ARBRE D'ADMISSION, ASN AJB0355026
ZAPFWELLEN-EINGANGSWELLE, ASN AJB0355026

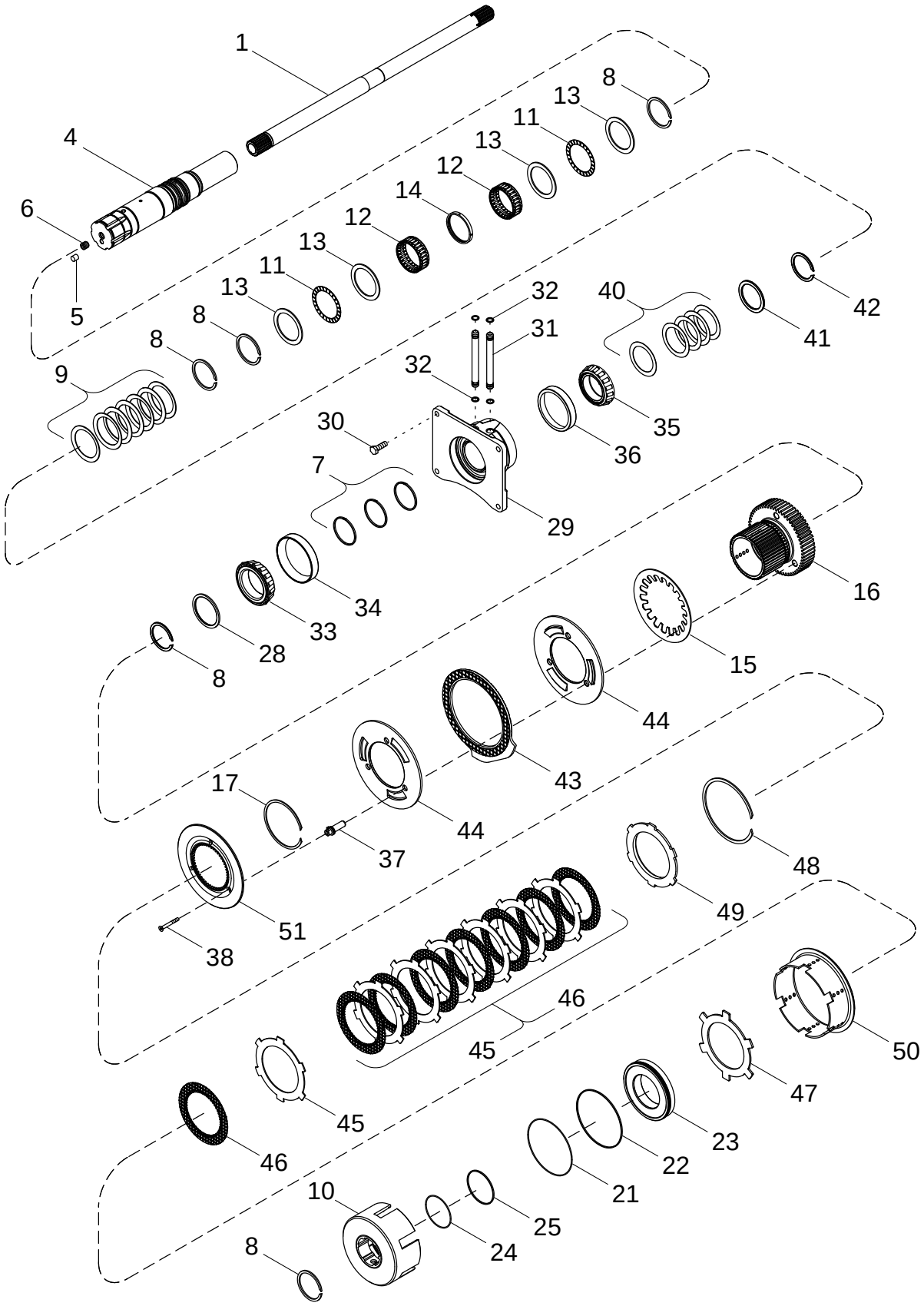

CONJUNTO DE LA TOMA DE FUERZA - EJE DE ENTRADA, ASN AJB0355026
CONJUNTO DA TOMADA DE FORÇA - EIXO DE ENTRADA, ASN AJB0355026
AFTAKAS - AANDRIJFAS, ASN AJB0355026
KRAFTOVERFØRINGSSAMLING - INDGANGSAKSEL, ASN AJB0355026

R	N	P.N.	MOD	Q	Description Denominacion	Descrizione Denominação	Description Beschrijving	Bezeichnung Beskrivelse	L.C.
1		198496A1		1	COUNTERSHAFT CONTRAARBOL	ALBERO SECONDARIO VEIO INTERMEDIARIO	ARBRE INTERMÉDIAIRE TUSSENAS	VORGELEGEWELLE FORLAGSAKSEL	013A
4		435388A3		1	SHAFT Inc. 5, 6 EJE	ALBERO VEIO	ARBRE AS	WELLE AKSEL	016A
5		1342851C1		1	PLUG 10 mm TAPÓN	TAPPO BUJÃO	BOUCHON PLUG	STOPFEN PROP	050T
6		877-31212		1	SET SCREW M12 x 12 TORNILLO DE AJUSTE	VITE DI FERMO TORNILLO DE AJUSTE	VIS DE RÉGLAGE KRACHTBRON	STELLSCHRAUBE PINOLSKRUE	P327
7		1286026C1		3	RING Seal ANILLO	ANELLO ANEL	ANNEAU RING	RING RING	045A
8		93350C1		5	RING Retaining ANILLO	ANELLO ANEL	ANNEAU RING	RING RING	045A
9		1286012C2		1	WASHER Belleville ARANDELA	ROSETTA PIANA ANILHA	RONDELLE SLUITRING	BEILAGSCHEIBE FLADSKIVE	131R
10		446596A4		1	CARRIER EJE DE SATELITES	PORTASATELLITI PORTA-SATELITES	PILIER, SOUTIEN SATELIETDRAGER	PLANETENTRÄGER SPIDSHJULSHOLDER	196P
11		572182R1		2	BEARING, THRUST COJINETE DE EMBRAGU	CUSCINETTO, REGGISP ROL. ENCOSTO	BUTÉE A BILLES LAGER, DRUKKOPPELIN	DRUKLAGER KUGLELEJE	342C
12		435716A1		2	BEARING, NEEDLE RODAMIENTO DE RPDIL	CUSCINETTO A RULLINI ROLAMENTO	ROULEMENT A AIGUILLE LAGER, NAALD	NADELLAGER NAALELEJE	344C
13		1286043C1		4	WASHER, THRUST ARANDELA DE TOPE	RONDELLA, DI SPINTA ANILHA DE ENCOSTO	RONDELLE DE BUTÉE SLUITRING DRUKPLAAT	DRUCKSCHEIBE TRYKSKIVE	023R
14		86989332		1	RING Needle Bearing Support ANILLO	ANELLO ANEL	ANNEAU RING	RING RING	045A
15		435636A1		1	SPRING Brake Apply Disc RESORTE	MOLLA MOLA	RESSORT VEER	FEDER FJEDER	100M
16		446598A4		1	GEAR 57T, 42T ENGRANAJE	INGRANAGGIO CARRETO	PIGNON TANDWIEL	ZAHNRAD TANDHJUL	050I
17		101-11400		1	CIRCLIP No. 400 RETENEDOR	ANELLO DI RITEGNO FREIO DE MOLA	CIRCLIP BOORGVEER	HALTERING LÃSERING	P019
21		1286083C1		1	O-RING JUNTA HERMETICA	ANELLO TOROIDALE O-RING	JOINT THORIQUE O-RING	DICHTRING O-RING	055A
22		1286079C1		1	RING ANILLO	ANELLO ANEL	ANNEAU RING	RING RING	045A
23		446597A2		1	PISTON EMBOLO	STANTUFFO PISTAO	PISTON ZUIGER	KOLBEN STEMPEL	235S
24		1286081C1		1	O-RING JUNTA HERMETICA	ANELLO TOROIDALE O-RING	JOINT THORIQUE O-RING	DICHTRING O-RING	055A
25		1286076C1		1	RING ANILLO	ANELLO ANEL	ANNEAU RING	RING RING	045A
28		1277309C1		1	WASHER ARANDELA	ROSETTA PIANA ANILHA	RONDELLE SLUITRING	BEILAGSCHEIBE FLADSKIVE	131R
29		436252A1		1	CAGE JAULA	GABBIA GAIOLA	CAGE CAGE	KÄFIG KUGLEHOLDER	1270
30		628-10030		4	SCREW M10 x 30; 10.9 TORNILLO	VITE PARAFUSO	VIS SCHROEF	SCHRAUBE SKRUE	7450
31		413665A1		2	TUBE TUBO	TUBETTO TUBO	TUBE BUISJE	SCHLAUCH RØR	195T

POWER TAKE OFF ASSEMBLY - INPUT SHAFT, ASN AJB0355026
GRUPPO DELLA PTO - ALBERO D'ENTRATA, ASN AJB0355026
PRISE DE FORCE - ARBRE D'ADMISSION, ASN AJB0355026
ZAPFWELLEN-EINGANGSWELLE, ASN AJB0355026

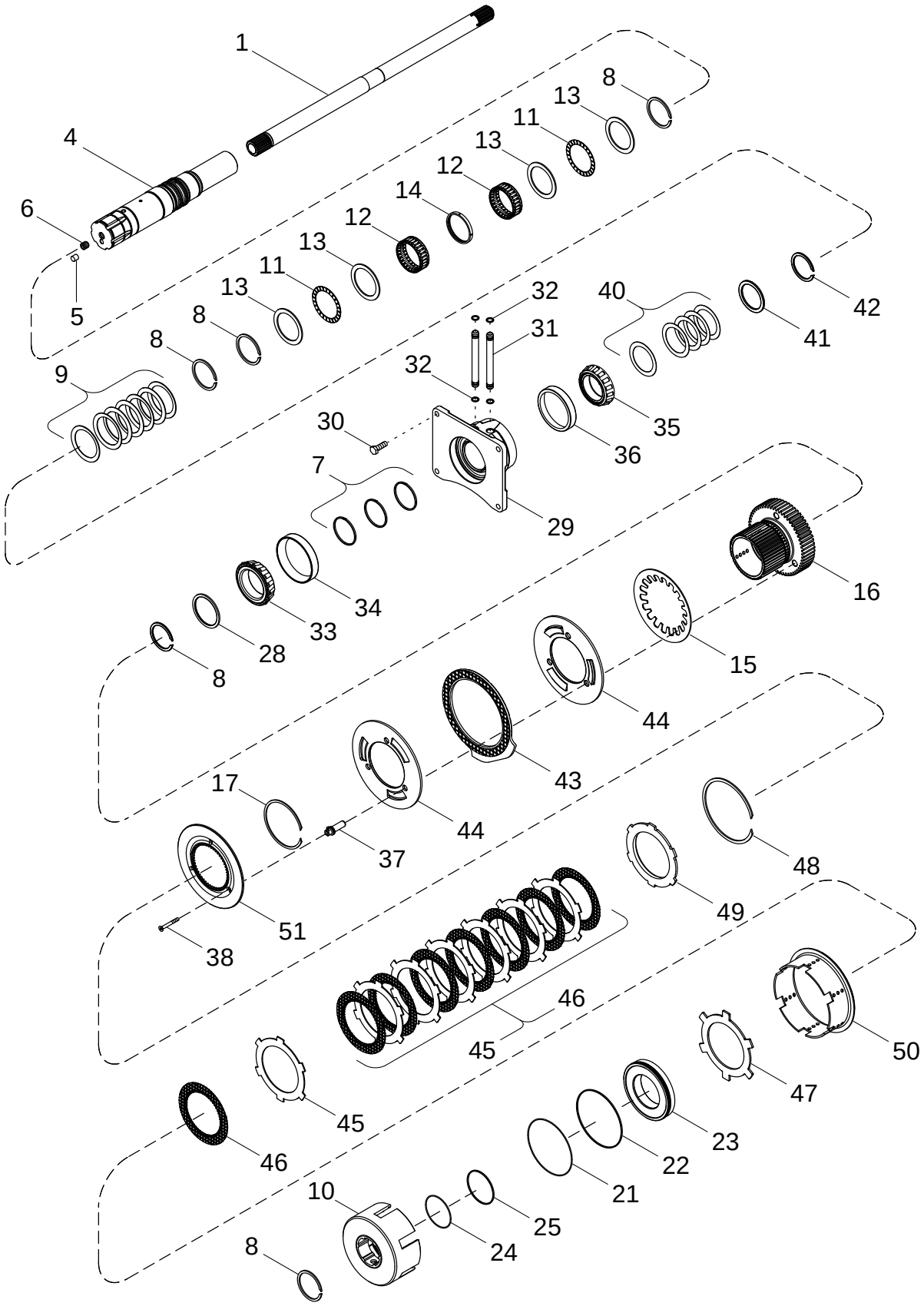

CONJUNTO DE LA TOMA DE FUERZA - EJE DE ENTRADA, ASN AJB0355026
CONJUNTO DA TOMADA DE FORÇA - EIXO DE ENTRADA, ASN AJB0355026
AFTAKAS - AANDRIJFAS, ASN AJB0355026
KRAFTOVERFØRINGSSAMLING - INDGANGSAKSEL, ASN AJB0355026

R	N	P.N.	MOD	Q	Description Denominacion	Descrizione Denominação	Description Beschrijving	Bezeichnung Beskrivelse	L.C.
32		238-5013		4	O-RING 7/16 ID x 1/16 JUNTA HERMETICA	ANELLO TOROIDALE ANEL O	JOINT TORIQUE O-RING	O-RING O-RING	7176
33		630694C1		1	BEARING, CONE CONO	CONO DEL CUSCINETTO CONE	CONE DE ROULEMENT KEGEL	LAGERKONUS LEJEKONUS	237C
34		630695C1		1	BEARING, CUP PISTA DE RODAMIENTO	ANELLO CUSCINETTO ANILHA ROLAMENTO	CUVETTE ROULEMENT LAGER, CUP	LAGERSCHALE LEJERING	062A
35		659458R1		1	BEARING, CONE CONO	CONO DEL CUSCINETTO CONE	CONE DE ROULEMENT KEGEL	KEGEL LEJEKONUS	P690
36		105497H		1	BEARING, CUP PISTA DE RODAMIENTO	ANELLO CUSCINETTO ANILHA ROLAMENTO	CUVETTE ROULEMENT LAGER, CUP	LAGERSCHALE LEJERING	062A
37		435718A3		3	ADJUSTER Pin, Brake REGULADOR	REGOLATORE REGULADOR	REGLEUR REGELAPPARAAT	EINSTELLVORRICHTING JUSTERER	118A
38		87427330		3	SCREW M6 x 50, with Loctite TORNILLO	VITE PARAFUSO	VIS SCHROEF	SCHRAUBE SKRUE	040V
		446943A1		1	SHIM Inc. 40 SUPLEMENTO	SPESSORE CALCO DE AFINACAO	CALE D'EPAISSEUR DIKTEPLAAT	EINSTELLSCHEIBCHEN MELLEMLAEG	198S
40		249776A1		1	SHIM 0,203 mm SUPLEMENTO	SPESSORE CALCO DE AFINACAO	CALE D'EPAISSEUR DIKTEPLAAT	EINSTELLSCHEIBCHEN MELLEMLAEG	198S
40		249777A1		1	SHIM 0,356 mm SUPLEMENTO	SPESSORE CALCO DE AFINACAO	CALE D'EPAISSEUR DIKTEPLAAT	EINSTELLSCHEIBCHEN MELLEMLAEG	198S
40		249778A1		1	SHIM 0,508 mm SUPLEMENTO	SPESSORE CALCO DE AFINACAO	CALE D'EPAISSEUR DIKTEPLAAT	EINSTELLSCHEIBCHEN MELLEMLAEG	198S
40		249779A1		1	SHIM 0,559 mm SUPLEMENTO	SPESSORE CALCO DE AFINACAO	CALE D'EPAISSEUR DIKTEPLAAT	EINSTELLSCHEIBCHEN MELLEMLAEG	198S
40		249780A1		1	SHIM 0,635 mm SUPLEMENTO	SPESSORE CALCO DE AFINACAO	CALE D'EPAISSEUR DIKTEPLAAT	EINSTELLSCHEIBCHEN MELLEMLAEG	198S
41		87427329		1	SPACER SEPARADOR	DISTANZIALE ESPACADOR	ENTRETOISE AFSTANDSRING	DISTANZSTÜCK AFSTANDSSTYKKE	075D
42		375374R1		1	RING ANILLO	ANELLO ANEL	ANNEAU RING	RING RING	045A
43		435892A2		1	BRAKE DISC DISCO DE FRENO	DISCO FRENO DISCO DE TRAVAO	DISQUE DE FREIN REMSCHIJF	BREMSSCHEIBE BREMSESKIVE	064D
44		435393A1		2	PLATE PLACA	PIASTRA CHAPA	PLAQUE PLAAT	PLATTE PLADE	105P
45		128114A1		7	DISC DISCO	DISCO DISCO	DISQUE SCHIJF	SCHEIBE NAV	060D
46		1997907C1		8	PLATE Friction PLACA	PIASTRA CHAPA	PLAQUE PLAAT	PLATTE PLADE	105P
47		435389A1		1	DISC DISCO	DISCO DISCO	DISQUE SCHIJF	SCHEIBE NAV	060D
48		1285996C1		1	RING, SNAP ANILLO DE RESORTE	ANELLO ELASTICO ANEL	ANNEAU D'ARRÊT RING, SNAP	SICHERUNGSRING LÅSERING	054A
49		1342645C3		1	DISC, CLUTCH DISCO (CONJUNTO)	DISCO, FRIZIONE DISCO CONJUNTO	DISQUE-D'EMBRAYAGE DISC, CLUTCH	KUPPLUNGSCHEIBE DISC, CLUTCH	P485
50		86989330		1	TUBE Brake Pusher TUBO	TUBETTO TUBO	TUBE BUISJE	SCHLAUCH RØR	195T
51		86989331		1	BRAKE DISC Pusher DISCO DE FRENO	DISCO FRENO DISCO DE TRAVAO	DISQUE DE FREIN REMSCHIJF	BREMSSCHEIBE BREMSESKIVE	064D

06-41		p1	11/04

POWER TAKE OFF ASSEMBLY - REDUCTION GEAR, DUAL SPEED
GRUPPO DELLA PTO - RIDUTTORE A INGRANAGGI, DOPPIO REGIME
PRISE DE FORCE - PIGNON DE RÉDUCTION, DEUX VITESSES
ZAPFWELLE - REDUKTIONSGETRIEBE MIT ZWEISTUFIGER DREHZAHL

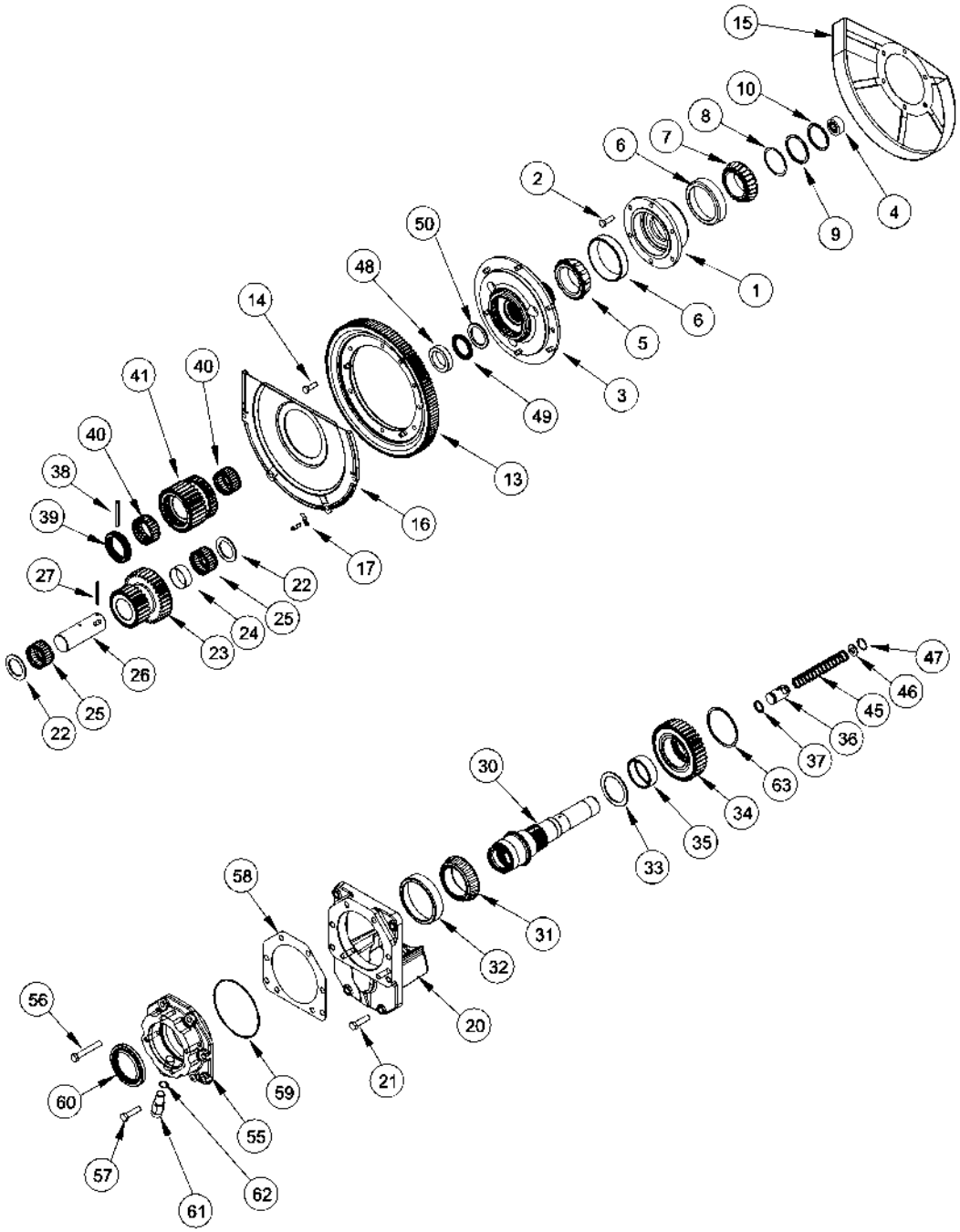

CONJUNTO DE LA TOMA DE FUERZA - ENGRANAJES DE REDUCCIÓN, VELOCIDAD DOBLE
CONJUNTO DA TOMADA DE FORÇA - ENGRENAGEM DE REDUÇÃO, DUAS VELOCIDADES
AFTAKAS - REDUCTIETANDWIEL, TWEE VERSNELLINGEN
CONJUNTO DE LA TOMA DE FUERZA - EJE DE ENTRADA

R	N	P.N.	MOD	Q	Description Denominacion	Descrizione Denominação	Description Beschrijving	Bezeichnung Beskrivelse	L.C.
1		225806A1		1	CAGE JAULA	GABBIA GAIOLA	CAGE CAGE	KÄFIG KUGLEHOLDER	1270
2		628-10030		6	SCREW M10 x 30; 10.9 TORNILLO	VITE PARAFUSO	VIS SCHROEF	SCHRAUBE SKRUE	7450
3		277389A2		1	HUB ASSY. Inc. 4 MAZA (CONJUNTO)	MOZZO, COMPLESSIVO CUBO CONJUNTO	MOYEU (ASSEMBLE) HUB ASSY.	NABE (KPLT.) HUB ASSY.	P470
4		R21491		1	BEARING COJINETE	CUSCINETTO ROLAMENTO	ROULEMENT BEARING	LAGER BEARING	0600
5		435536A1		1	BEARING, CONE CONO	CONO DEL CUSCINETTO CONE	CONE DE ROULEMENT KEGEL	LAGERKONUS LEJEKONUS	237C
6		435535A1		2	BEARING, CUP PISTA DE RODAMIENTO	ANELLO CUSCINETTO ANILHA ROLAMENTO	CUVETTE ROULEMENT LAGER, CUP	LAGERSCHALE LEJERING	062A
7		235545A1		1	BEARING, CONE CONO	CONO DEL CUSCINETTO CONE	CONE DE ROULEMENT KEGEL	LAGERKONUS LEJEKONUS	237C
		253456A1		1	SHIM Inc. 8 SUPLEMENTO	SPESSORE CALCO DE AFINACAO	CALE D'EPAISSEUR DIKTEPLAAT	EINSTELLSCHEIBCHEN MELLEMLAEG	198S
8		373471A1		1	SHIM 0,152 mm SUPLEMENTO	SPESSORE CALCO DE AFINACAO	CALE D'EPAISSEUR DIKTEPLAAT	EINSTELLSCHEIBCHEN MELLEMLAEG	198S
8		373474A1		1	SHIM 0,178 mm SUPLEMENTO	SPESSORE CALCO DE AFINACAO	CALE D'EPAISSEUR DIKTEPLAAT	EINSTELLSCHEIBCHEN MELLEMLAEG	198S
8		249529A1		1	SHIM 0,203 mm SUPLEMENTO	SPESSORE CALCO DE AFINACAO	CALE D'EPAISSEUR DIKTEPLAAT	EINSTELLSCHEIBCHEN MELLEMLAEG	198S
8		231773A1		1	SHIM 0,356 mm SUPLEMENTO	SPESSORE CALCO DE AFINACAO	CALE D'EPAISSEUR DIKTEPLAAT	EINSTELLSCHEIBCHEN MELLEMLAEG	198S
8		231778A1		1	SHIM 0,635 mm SUPLEMENTO	SPESSORE CALCO DE AFINACAO	CALE D'EPAISSEUR DIKTEPLAAT	EINSTELLSCHEIBCHEN MELLEMLAEG	198S
9		231772A1		1	SPACER SEPARADOR	DISTANZIALE ESPACADOR	ENTRETOISE AFSTANDSRING	DISTANZSTÜCK AFSTANDSSTYKKE	075D
10		231760A1		1	RING, SNAP ANILLO DE RESORTE	ANELLO ELASTICO ANEL	ANNEAU D'ARRÊT RING, SNAP	SICHERUNGSRING LÅSERING	054A
13		226950A4		1	RING, FLYWHEEL CORONA	ANELLO, INGRANAGGIO CREMALHEIRA	COURONNE DENTEE EX RING, FLYWHEEL	ZAHNKRANZ RING, FLYWHEEL	Z284
14		628-10030		6	SCREW M10 x 30; 10.9 TORNILLO	VITE PARAFUSO	VIS SCHROEF	SCHRAUBE SKRUE	7450
15		198709A1		1	PROTECTION PLATE CHAPA PROTECCION	PIASTRA, PROTETTIVA CHAPA PROTE O	TOLE-PROTECTION SHIELD	SCHUTZBLECH SHIELD	Z647
16		225810A1		1	COVER TAPADERA	COPERCHIO COBERTA	COUVERCLE DEKSEL	DECKEL DÆKSEL	265C
17		139327C1		4	CLIP SUJETADOR	FERMAGLIO FIXADOR	CLIP KLEM	KLAMMER KLIPS	045F
20		226037A4		1	COVER TAPADERA	COPERCHIO COBERTA	COUVERCLE DEKSEL	DECKEL DÆKSEL	265C
21		828-12045		4	SCREW M12 x 45; 10.9 TORNILLO	VITE PARAFUSO	VIS SCHROEF	SCHRAUBE SKRUE	7450
22		226035A1		2	WASHER ARANDELA	ROSETTA PIANA ANILHA	RONDELLE SLUITRING	BEILAGSCHEIBE FLADSKIVE	131R
23		226033A3		1	PINION PINON	PIGNONE PINHAO	PIGNON PINION	RITZEL PINION	P045

06-41		p2	11/04

POWER TAKE OFF ASSEMBLY - REDUCTION GEAR, DUAL SPEED
GRUPPO DELLA PTO - RIDUTTORE A INGRANAGGI, DOPPIO REGIME
PRISE DE FORCE - PIGNON DE RÉDUCTION, DEUX VITESSES
ZAPFWELLE - REDUKTIONSGETRIEBE MIT ZWEISTUFIGER DREHZAHL

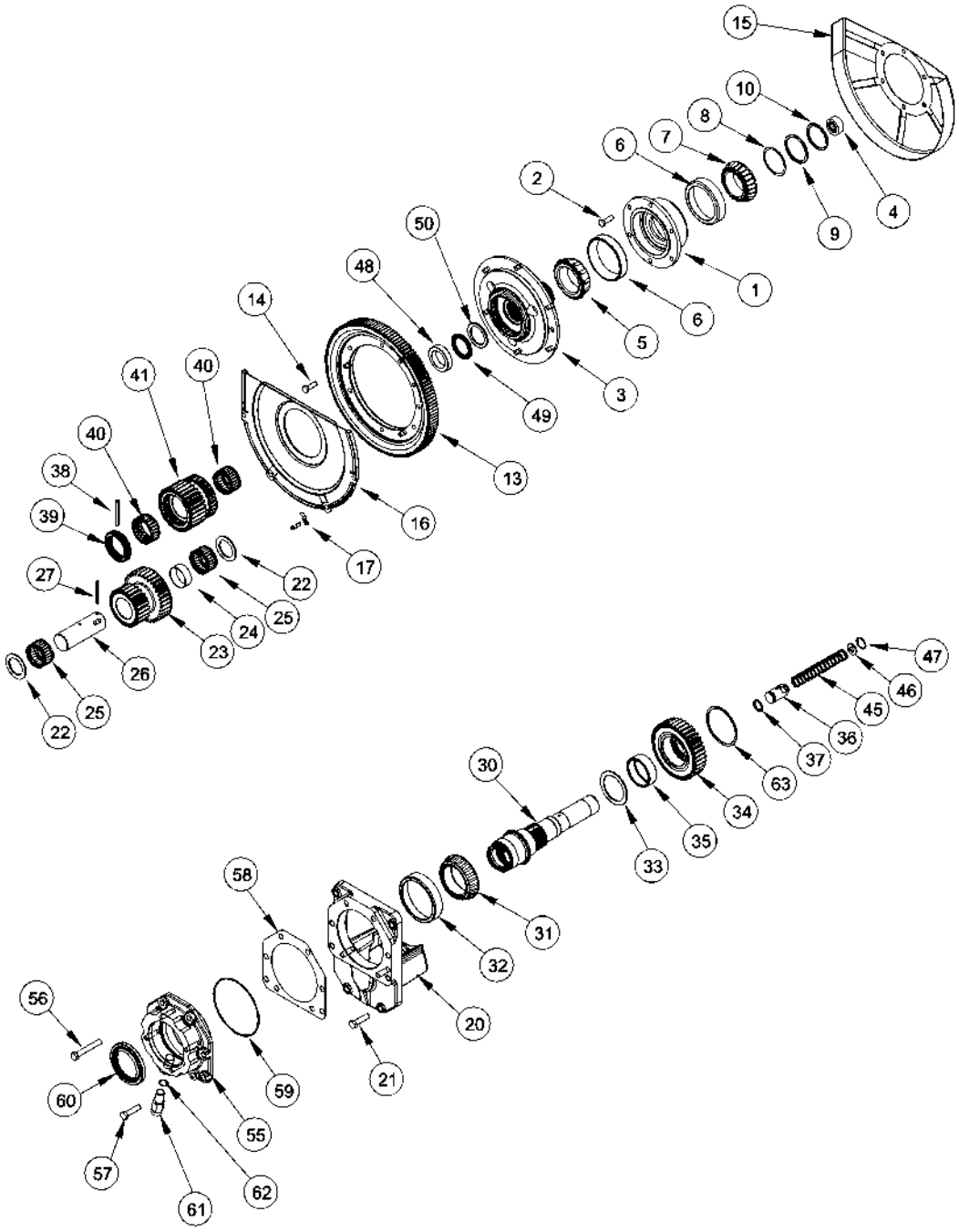

CONJUNTO DE LA TOMA DE FUERZA - ENGRANAJES DE REDUCCIÓN, VELOCIDAD DOBLE
CONJUNTO DA TOMADA DE FORÇA - ENGRENAGEM DE REDUÇÃO, DUAS VELOCIDADES
AFTAKAS - REDUCTIETANDWIEL, TWEE VERSNELLINGEN
CONJUNTO DE LA TOMA DE FUERZA - EJE DE ENTRADA

R	N	P.N.	MOD	Q	Description Denominacion	Descrizione Denominação	Description Beschrijving	Bezeichnung Beskrivelse	L.C.
24		300084A1		1	SPACER SEPARADOR	DISTANZIALE ESPACADOR	ENTRETOISE AFSTANDSRING	DISTANZSTÜCK AFSTANDSSTYKKE	075D
25		138763C91		2	BEARING, NEEDLE RODAMIENTO DE RPDIL	CUSCINETTO A RULLINI ROLAMENTO	ROULEMENT A AIGUILLE LAGER, NAALD	NADELLAGER NAALELEJE	344C
26		226034A2		1	SHAFT EJE	ALBERO VEIO	ARBRE AS	WELLE AKSEL	016A
27		38-21240		1	PIN, ROLL 3/16 x 2-1/2 in PASADOR TUBOLAR	SPINA ELASTICA TROCO	GOUPILLE ELASTIQUE SPANSTIFT	SPANNSTIFT SPLIT	P613
30		324000A1		1	SHAFT, GEAR EJE DE PINIONS	ALBERO, INGRANAGGIO EIXO PINHAO	ARBRE DE PIGNONS SHAFT, GEAR	ZAHNRADWELLE GEARAKSEL	P722
31		A67328		1	BEARING, CONE CONO	CONO DEL CUSCINETTO CONE	CONE DE ROULEMENT KEGEL	LAGERKONUS LEJEKONUS	237C
32		A67327		1	BEARING, CUP PISTA DE RODAMIENTO	ANELLO CUSCINETTO ANILHA ROLAMENTO	CUVETTE ROULEMENT LAGER, CUP	LAGERSCHALE LEJERING	062A
33		226024A3		1	WASHER, THRUST ARANDELA DE TOPE	RONDELLA, DI SPINTA ANILHA DE ENCOSTO	RONDELLE DE BUTÉE SLUITRING DRUKPLAAT	DRUCKSCHEIBE TRYKSKIVE	023R
34		326733A1		1	PINION PINON	PIGNONE PINHAO	PIGNON PINION	RITZEL PINION	P045
35		318641A1		1	BEARING, NEEDLE RODAMIENTO DE RPDIL	CUSCINETTO A RULLINI ROLAMENTO	ROULEMENT A AIGUILLE LAGER, NAALD	NADELLAGER NAALELEJE	344C
36		226028A2		1	PISTON EMBOLO	STANTUFFO PISTAO	PISTON ZUIGER	KOLBEN STEMPEL	235S
37		226029A1		1	RING ANILLO	ANELLO ANEL	ANNEAU RING	RING RING	045A
38		38-32044		1	PIN, ROLL 5/16 x 2-3/4 PASADOR TUBOLAR	SPINA ELASTICA TROCO	GOUPILLE ELASTIQUE SPANSTIFT	SPANNSTIFT SPLIT	200S
39		226031A2		1	COLLAR ABRAZADERA	FASCETTA COLAR	COLLIER SPANKRAAG	FLANSCH SLANGEBAAND	031F
40		330162A1		2	BEARING, NEEDLE RODAMIENTO DE RPDIL	CUSCINETTO A RULLINI ROLAMENTO	ROULEMENT A AIGUILLE LAGER, NAALD	NADELLAGER NAALELEJE	344C
41		326731A1		1	GEAR ENGRANAJE	INGRANAGGIO CARRETO	PIGNON TANDWIEL	ZAHNRAD TANDHJUL	050I
45		323066A1		1	SPRING RESORTE	MOLLA MOLA	RESSORT VEER	FEDER FJEDER	100M
46		295066A1		1	WASHER ARANDELA	ROSETTA PIANA ANILHA	RONDELLE SLUITRING	BEILAGSCHEIBE FLADSKIVE	131R
47		100-21112		1	SNAP RING No. 112 ANILLO DE CIERRE	ANELLO ELASTICO ANEL TRAVA	ANNEAU-D'ARRET SNAP RING	SICHERUNGSRING SNAP RING	P345
48		327172A1		1	SPACER SEPARADOR	DISTANZIALE ESPACADOR	ENTRETOISE AFSTANDSRING	DISTANZSTÜCK AFSTANDSSTYKKE	075D
49		243544A1		1	BEARING, NEEDLE RODAMIENTO DE RPDIL	CUSCINETTO A RULLINI ROLAMENTO	ROULEMENT A AIGUILLE LAGER, NAALD	NADELLAGER NAALELEJE	344C
50		327372A1		1	WASHER ARANDELA	ROSETTA PIANA ANILHA	RONDELLE SLUITRING	BEILAGSCHEIBE FLADSKIVE	131R
55		241384A3		1	HOUSING, BEARING CAJA DEL COJINETE	SCATOLA DEL CUSCINE CAIXA DE ROLAMENTO	PALIER DE ROULEMENT LAGERHUIS	LAGERGEHÄUSE LEJEHUS	039S
56		828-12080		6	SCREW M12 x 80; 10.9 TORNILLO	VITE PARAFUSO	VIS SCHROEF	SCHRAUBE SKRUE	040V

POWER TAKE OFF ASSEMBLY - REDUCTION GEAR, DUAL SPEED
GRUPPO DELLA PTO - RIDUTTORE A INGRANAGGI, DOPPIO REGIME
PRISE DE FORCE - PIGNON DE RÉDUCTION, DEUX VITESSES
ZAPFWELLE - REDUKTIONSGETRIEBE MIT ZWEISTUFIGER DREHZAHL

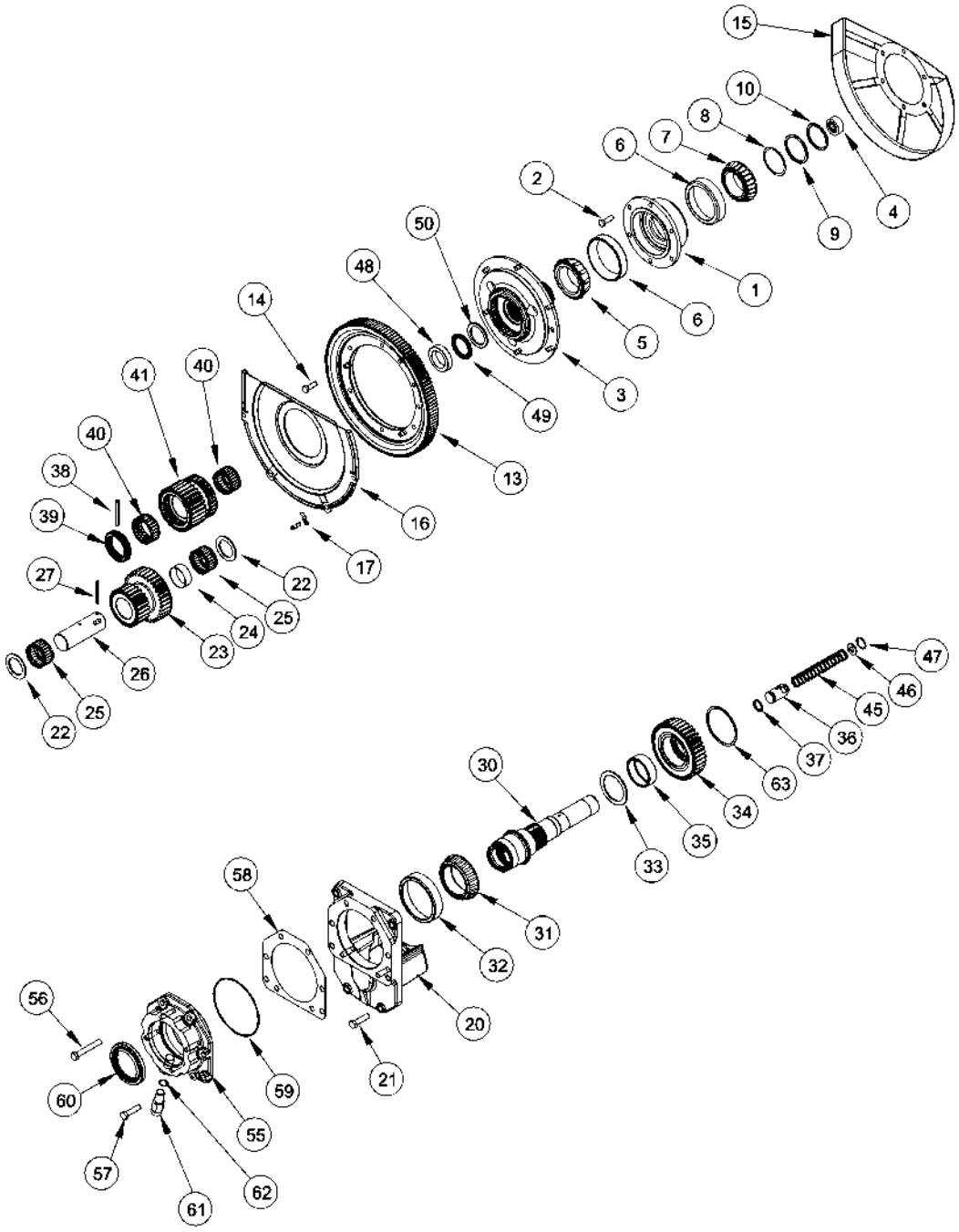

CONJUNTO DE LA TOMA DE FUERZA - ENGRANAJES DE REDUCCIÓN, VELOCIDAD DOBLE
CONJUNTO DA TOMADA DE FORÇA - ENGRENAGEM DE REDUÇÃO, DUAS VELOCIDADES
AFTAKAS - REDUCTIETANDWIEL, TWEE VERSNELLINGEN
CONJUNTO DE LA TOMA DE FUERZA - EJE DE ENTRADA

R	N	P.N.	MOD	Q	Description Denominacion	Descrizione Denominação	Description Beschrijving	Bezeichnung Beskrivelse	L.C.
57		828-12045		2	SCREW M12 x 45; 10.9 TORNILLO	VITE PARAFUSO	VIS SCHROEF	SCHRAUBE SKRUE	7450
		253460A1		1	SHIM Inc. 58 SUPLEMENTO	SPESSORE CALCO DE AFINACAO	CALE D'EPAISSEUR DIKTEPLAAT	EINSTELLSCHEIBCHEN MELLEMLAEG	198S
58		249530A1		1	SHIM 0,203 mm SUPLEMENTO	SPESSORE CALCO DE AFINACAO	CALE D'EPAISSEUR DIKTEPLAAT	EINSTELLSCHEIBCHEN MELLEMLAEG	198S
58		241383A1		1	SHIM 0,356 mm SUPLEMENTO	SPESSORE CALCO DE AFINACAO	CALE D'EPAISSEUR DIKTEPLAAT	EINSTELLSCHEIBCHEN MELLEMLAEG	198S
58		241380A1		1	SHIM 0,508 mm SUPLEMENTO	SPESSORE CALCO DE AFINACAO	CALE D'EPAISSEUR DIKTEPLAAT	EINSTELLSCHEIBCHEN MELLEMLAEG	198S
58		241381A1		1	SHIM 0,559 mm SUPLEMENTO	SPESSORE CALCO DE AFINACAO	CALE D'EPAISSEUR DIKTEPLAAT	EINSTELLSCHEIBCHEN MELLEMLAEG	198S
58		241382A1		1	SHIM 0,635 mm SUPLEMENTO	SPESSORE CALCO DE AFINACAO	CALE D'EPAISSEUR DIKTEPLAAT	EINSTELLSCHEIBCHEN MELLEMLAEG	198S
59		638-54145		1	O-RING 145 ID x 3,55 mm JUNTA HERMETICA	ANELLO TOROIDALE O-RING	JOINT THORIQUE O-RING	DICHTRING O-RING	055A
60		293053A1		1	SEAL, OIL JUNTA DE ACEITE	PARAOLIO VEDADOR DE OLEO	JOINT D'HUILE OIL-SEAL	ÖLDICHTUNG OLIESEGL	P278
61		A186004		1	SENSOR SENSOR	SENSORE SENSOR	CAPTEUR SENSOR	SENSOR FØLER	608S
62		238-5115		1	O-RING 11/16 ID x 3/32 JUNTA HERMETICA	ANELLO TOROIDALE ANEL O	JOINT TORIQUE O-RING	O-RING O-RING	7176
63		102-22318		1	RING No. 318 ANILLO	ANELLO ANEL	ANNEAU RING	RING RING	045A

POWER TAKE OFF ASSEMBLY - OUTPUT SHAFT, DUAL SPEED
GRUPPO DELLA PTO - ALBERO D'USCITA, DOPPIO REGIME
PRISE DE FORCE - ARBRE DE SORTIE, DEUX VITESSES
ZAPFWELLE - AUSGANGSWELLE MIT ZWEISTUFIGER DREHZAHL

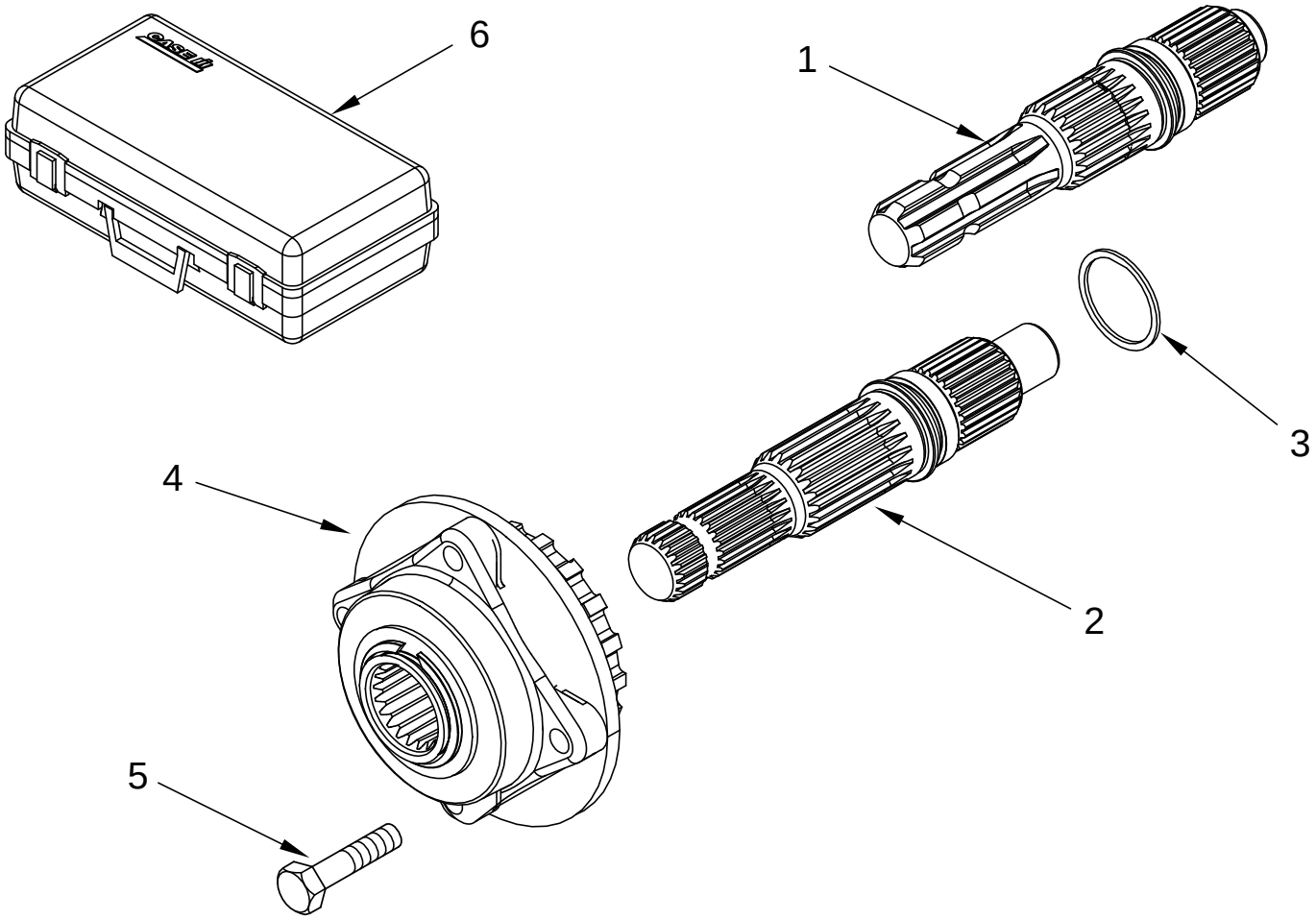

CONJUNTO DE LA TOMA DE FUERZA - EJE DE SALIDA, VELOCIDAD DOBLE
CONJUNTO DA TOMADA DE FORÇA - EIXO DE SAÍDA, DUAS VELOCIDADES
AFTAKAS CONSTRUCTIE - UITVOERAS, TWEE VERSNELLINGEN
KRAFTOVERFØRINGSSAMLING - UDGANGSAKSEL, DOBBELT HASTIGHED

R	N	P.N.	MOD	Q	Description Denominacion	Descrizione Denominação	Description Beschrijving	Bezeichnung Beskrivelse	L.C.
1		226045A2		1	SHAFT, DRIVE RPM 540, 35 mm (1-3/8 in)				
						ALBERO MOTORE	ARBRE D'ENTRAINEMEN	ANTRIEBSWELLE	P754
					ARBOL DE MANDO	EIXO COMANDO	SHAFT, DRIVE	DRIVAKSEL	
2		226042A2		1	SHAFT, DRIVE RPM 1000, 35 mm (1-3/8 in)				
						ALBERO MOTORE	ARBRE D'ENTRAINEMEN	ANTRIEBSWELLE	P754
					ARBOL DE MANDO	EIXO COMANDO	SHAFT, DRIVE	DRIVAKSEL	
3		341418A2		1	SEAL	ANELLO DI TENUTA	JOINT	DICHTUNG	132A
					ANILLO DE CIERRE	ANEL DE VEDACAO	DICHTINGSRING	PAKNINGSRING	
4		241387A5		1	HOUSING	ALLOGGIAMENTO	CARTER	GEHÄUSE	014V
					CAVIDAD	ALOJAMENTO	HUIS	HUS	
5		614-10040		4	SCREW M10 x 40	VITE	VIS	SCHRAUBE	P136
					TORNILLO	PARAFUSO	SCHROEF	SKRUE	
6		258531A1		1	BOX	SCATOLA	BOÎTIER	KISTE	0960
					CAJA	CAIXA	KAST	KASSE	

POWER TAKE OFF ASSEMBLY - OUTPUT SHAFT, SINGLE SPEED, BSN AJB0355026
GRUPPO DELLA PTO - ALBERO D'USCITA, REGIME UNICO, BSN AJB0355026
PRISE DE FORCE - ARBRE DE SORTIE, UNE VITESSE, BSN AJB0355026
ZAPFWELLE - AUSGANGSWELLE MIT EINSTUFIGER DREHZAHL, BSN AJB0355026

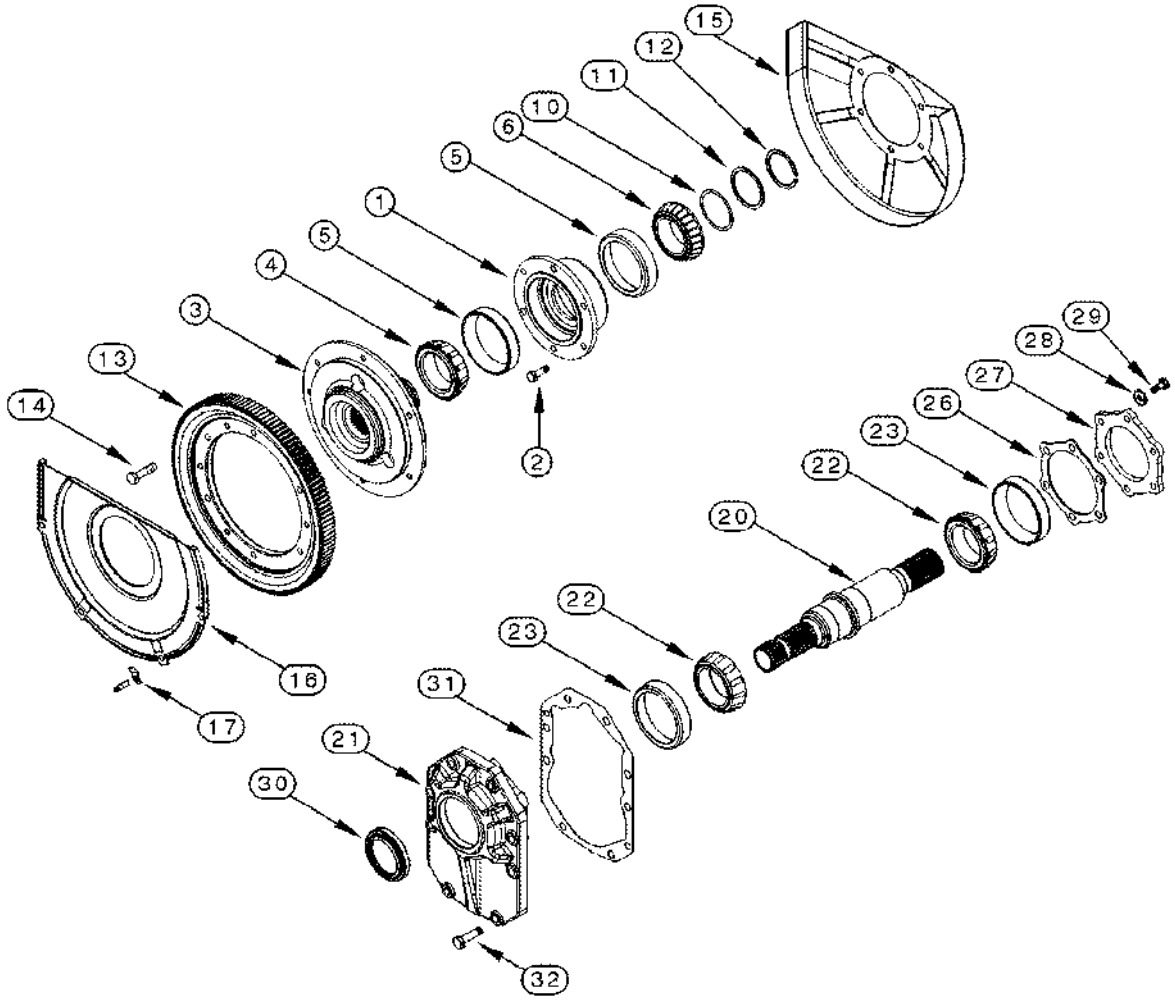

CONJUNTO DE LA TOMA DE FUERZA - EJE DE SALIDA, VELOCIDAD ÚNICA, BSN AJB0355026
CONJUNTO DA TOMADA DE FORÇA - EIXO DE SAÍDA, UMA VELOCIDADE, BSN AJB0355026
AFTAKAS - UITVOERAS, ENKELE VERSNELLING, BSN AJB0355026
KRAFTOVERFØRINGSSAMLING - UDGANGSAKSEL, EN HASTIGHED, BSN AJB0355026

R	N	P.N.	MOD	Q	Description Denominacion	Descrizione Denominação	Description Beschrijving	Bezeichnung Beskrivelse	L.C.
1		225806A1		1	CAGE JAULA	GABBIA GAIOLA	CAGE CAGE	KÄFIG KUGLEHOLDER	1270
2		628-10030		6	SCREW M10 x 30; 10.9 TORNILLO	VITE PARAFUSO	VIS SCHROEF	SCHRAUBE SKRUE	7450
3		277389A2		1	HUB ASSY. MAZA (CONJUNTO)	MOZZO, COMPLESSIVO CUBO CONJUNTO	MOYEU (ASSEMBLE) HUB ASSY.	NABE (KPLT.) HUB ASSY.	P470
4		435536A1		1	BEARING, CONE CONO	CONO DEL CUSCINETTO CONE	CONE DE ROULEMENT KEGEL	LAGERKONUS LEJEKONUS	237C
5		435535A1		2	BEARING, CUP PISTA DE RODAMIENTO	ANELLO CUSCINETTO ANILHA ROLAMENTO	CUVETTE ROULEMENT LAGER, CUP	LAGERSCHALE LEJERING	062A
6		235545A1		1	BEARING, CONE CONO	CONO DEL CUSCINETTO CONE	CONE DE ROULEMENT KEGEL	LAGERKONUS LEJEKONUS	237C
		253456A1		1	SHIM Inc. 10 SUPLEMENTO	SPESSORE CALCO DE AFINACAO	CALE D'EPAISSEUR DIKTEPLAAT	EINSTELLSCHEIBCHEN MELLEMLAEG	198S
10		373471A1		1	SHIM 0,152 mm SUPLEMENTO	SPESSORE CALCO DE AFINACAO	CALE D'EPAISSEUR DIKTEPLAAT	EINSTELLSCHEIBCHEN MELLEMLAEG	198S
10		373474A1		1	SHIM 0.178 mm SUPLEMENTO	SPESSORE CALCO DE AFINACAO	CALE D'EPAISSEUR DIKTEPLAAT	EINSTELLSCHEIBCHEN MELLEMLAEG	198S
10		249529A1		1	SHIM 0,203 mm SUPLEMENTO	SPESSORE CALCO DE AFINACAO	CALE D'EPAISSEUR DIKTEPLAAT	EINSTELLSCHEIBCHEN MELLEMLAEG	198S
10		231773A1		1	SHIM 0,356 mm SUPLEMENTO	SPESSORE CALCO DE AFINACAO	CALE D'EPAISSEUR DIKTEPLAAT	EINSTELLSCHEIBCHEN MELLEMLAEG	198S
10		231777A1		1	SHIM 0,559 mm SUPLEMENTO	SPESSORE CALCO DE AFINACAO	CALE D'EPAISSEUR DIKTEPLAAT	EINSTELLSCHEIBCHEN MELLEMLÆG	7770
10		231778A1		1	SHIM 0,635 mm SUPLEMENTO	SPESSORE CALCO DE AFINACAO	CALE D'EPAISSEUR DIKTEPLAAT	EINSTELLSCHEIBCHEN MELLEMLAEG	198S
11		231772A1		1	SPACER SEPARADOR	DISTANZIALE ESPACADOR	ENTRETOISE AFSTANDSRING	DISTANZSTÜCK AFSTANDSSTYKKE	075D
12		231760A1		1	RING, SNAP ANILLO DE RESORTE	ANELLO ELASTICO ANEL	ANNEAU D'ARRÊT RING, SNAP	SICHERUNGSRING LÅSERING	054A
13		226950A4		1	RING, FLYWHEEL CORONA	ANELLO, INGRANAGGIO CREMALHEIRA	COURONNE DENTEE EX RING, FLYWHEEL	ZAHNKRANZ RING, FLYWHEEL	Z284
14		628-10030		6	SCREW M10 x 30; 10.9 TORNILLO	VITE PARAFUSO	VIS SCHROEF	SCHRAUBE SKRUE	7450
15		198709A1		1	PROTECTION PLATE CHAPA PROTECCION	PIASTRA, PROTETTIVA CHAPA PROTE O	TOLE-PROTECTION SHIELD	SCHUTZBLECH SHIELD	Z647
16		225810A1		1	COVER TAPADERA	COPERCHIO COBERTA	COUVERCLE DEKSEL	DECKEL DÆKSEL	265C
17		139327C1		4	CLIP SUJETADOR	FERMAGLIO FIXADOR	CLIP KLEM	KLAMMER KLIPS	045F
20		225812A1		1	SHAFT 45 mm (1-3/4 in) EJE	ALBERO VEIO	ARBRE AS	WELLE AKSEL	016A
21		243946A4		1	COVER TAPADERA	COPERCHIO COBERTA	COUVERCLE DEKSEL	DECKEL DÆKSEL	265C
22		435536A1		2	BEARING, CONE CONO	CONO DEL CUSCINETTO CONE	CONE DE ROULEMENT KEGEL	LAGERKONUS LEJEKONUS	237C
23		435535A1		2	BEARING, CUP PISTA DE RODAMIENTO	ANELLO CUSCINETTO ANILHA ROLAMENTO	CUVETTE ROULEMENT LAGER, CUP	LAGERSCHALE LEJERING	062A

POWER TAKE OFF ASSEMBLY - OUTPUT SHAFT, SINGLE SPEED, BSN AJB0355026
GRUPPO DELLA PTO - ALBERO D'USCITA, REGIME UNICO, BSN AJB0355026
PRISE DE FORCE - ARBRE DE SORTIE, UNE VITESSE, BSN AJB0355026
ZAPFWELLE - AUSGANGSWELLE MIT EINSTUFIGER DREHZAHL, BSN AJB0355026

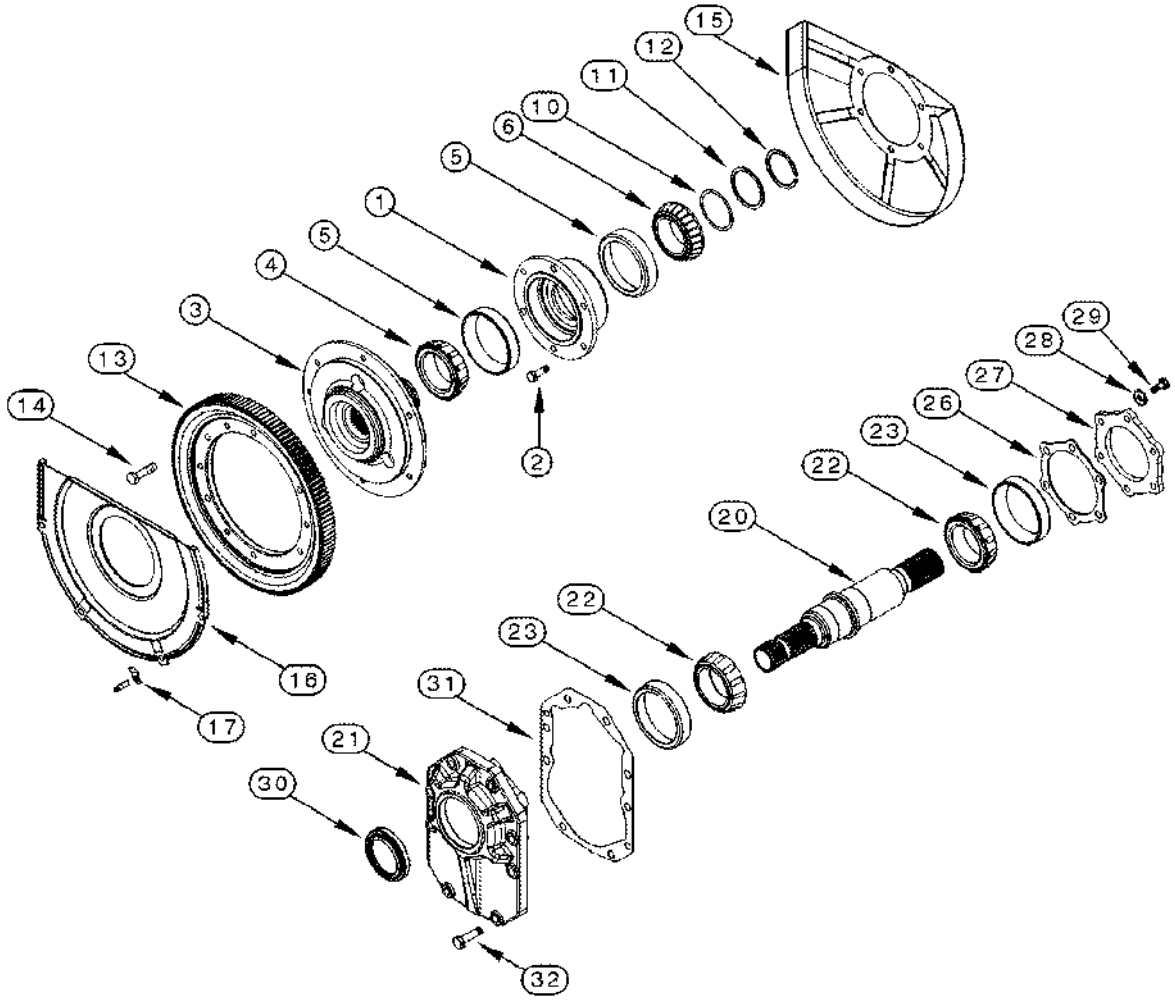

CONJUNTO DE LA TOMA DE FUERZA - EJE DE SALIDA, VELOCIDAD ÚNICA, BSN AJB0355026
CONJUNTO DA TOMADA DE FORÇA - EIXO DE SAÍDA, UMA VELOCIDADE, BSN AJB0355026
AFTAKAS - UITVOERAS, ENKELE VERSNELLING, BSN AJB0355026
KRAFTOVERFØRINGSSAMLING - UDGANGSAKSEL, EN HASTIGHED, BSN AJB0355026

R	N	P.N.	MOD	Q	Description Denominacion	Descrizione Denominação	Description Beschrijving	Bezeichnung Beskrivelse	L.C.
		253459A4		1	KIT, SHIM Inc. 26 JUEGO DE CALCES	KIT SPESSORE JUEGO DE CALCES	JEU DE CALES PACKAGE, SHIMS	EINSTELLSCHEIBEN, SC KIT, AFSTANDSSTYKKE	P688
26		380164A1		1	SHIM 0,152 mm SUPLEMENTO	SPESSORE CALCO DE AFINACAO	CALE D'EPAISSEUR DIKTEPLAAT	EINSTELLSCHEIBCHEN MELLEMLAEG	198S
26		380165A1		1	SHIM 0,178 mm SUPLEMENTO	SPESSORE CALCO DE AFINACAO	CALE D'EPAISSEUR DIKTEPLAAT	EINSTELLSCHEIBCHEN MELLEMLAEG	198S
26		249532A4		1	SHIM 0,203 mm SUPLEMENTO	SPESSORE CALCO DE AFINACAO	CALE D'EPAISSEUR DIKTEPLAAT	EINSTELLSCHEIBCHEN MELLEMLAEG	198S
26		243949A4		1	SHIM 0,356 mm SUPLEMENTO	SPESSORE CALCO DE AFINACAO	CALE D'EPAISSEUR DIKTEPLAAT	EINSTELLSCHEIBCHEN MELLEMLAEG	198S
26		243952A4		1	SHIM 0,635 mm SUPLEMENTO	SPESSORE CALCO DE AFINACAO	CALE D'EPAISSEUR DIKTEPLAAT	EINSTELLSCHEIBCHEN MELLEMLAEG	198S
27		305751A1		1	PLATE PLACA	PIASTRA CHAPA	PLAQUE PLAAT	PLATTE PLADE	105P
28		896-12012		6	WASHER 13,5 x 24 x 3 mm ARANDELA	ROSETTA PIANA ANILHA	RONDELLE SLUITRING	SCHEIBE FLADSKIVE	9720
29		627-12080		6	SCREW M12 x 80; 10.9 TORNILLO	VITE PARAFUSO	VIS SCHROEF	SCHRAUBE SKRUE	040V
30		225820A1		1	SEAL, OIL JUNTA DE ACEITE	PARAOLIO VEDADOR DE OLEO	JOINT D'HUILE OIL-SEAL	ÖLDICHTUNG OLIESEGL	P278
31		228256A1		1	GASKET JUNTA HERMETICA	GUARNIZIONE JUNTA	JOINT DICHTINGSSTUK	DICHTUNG, FLACH PAKNING	123G
32		828-12045		8	SCREW M12 x 45; 10.9 TORNILLO	VITE PARAFUSO	VIS SCHROEF	SCHRAUBE SKRUE	7450

06-44		p1	11/04

POWER TAKE OFF ASSEMBLY - OUTPUT SHAFT, SINGLE SPEED - ASN AJB0355026
GRUPPO DELLA PTO - ALBERO D'USCITA, REGIME UNICO - ASN AJB0355026
PRISE DE FORCE - ARBRE DE SORTIE, UNE VITESSE - ASN AJB0355026
ZAPFWELLE - AUSGANGSWELLE MIT EINSTUFIGER DREHZAHL - ASN AJB0355026

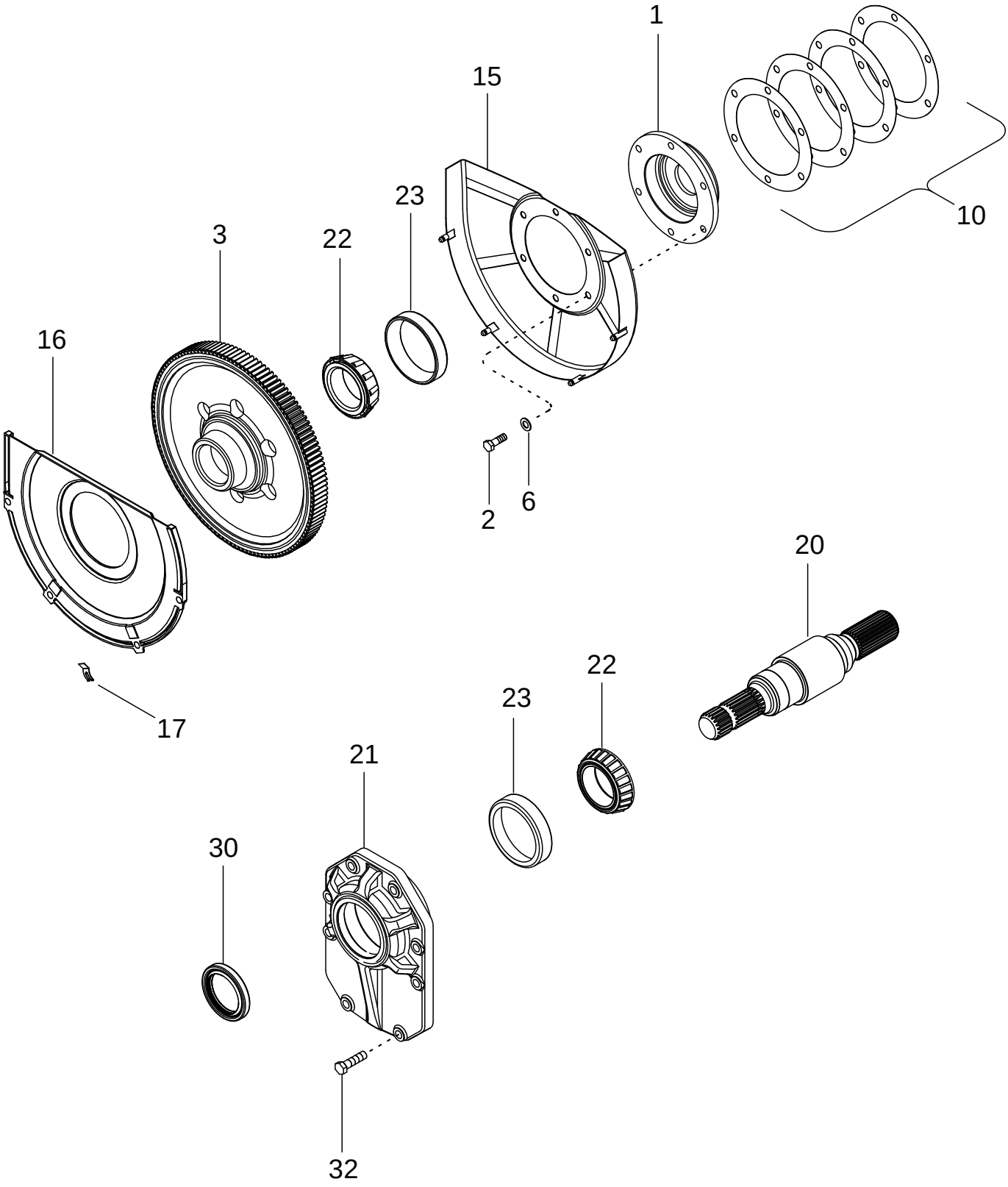

CONJUNTO DE LA TOMA DE FUERZA - EJE DE SALIDA, VELOCIDAD ÚNICA - ASN AJB0355026
CONJUNTO DA TOMADA DE FORÇA - EIXO DE SAÍDA, UMA VELOCIDADE - ASN AJB0355026
AFTAKAS - UITVOERAS, ENKELE VERSNELLING - ASN AJB0355026
KRAFTOVERFØRINGSSAMLING - UDGANGSAKSEL, EN HASTIGHED - ASN AJB0355026

R	N	P.N.	MOD	Q	Description Denominacion	Descrizione Denominação	Description Beschrijving	Bezeichnung Beskrivelse	L.C.
1		444803A2		1	CAGE JAULA	GABBIA GAIOLA	CAGE CAGE	KÄFIG KUGLEHOLDER	1270
2		628-10030		6	SCREW M10 x 30; 10.9 TORNILLO	VITE PARAFUSO	VIS SCHROEF	SCHRAUBE SKRUE	7450
3		444799A2		1	RING, FLYWHEEL 125T CORONA	ANELLO, INGRANAGGIO CREMALHEIRA	COURONNE DENTEE EX RING, FLYWHEEL	ZAHNKRANZ RING, FLYWHEEL	Z284
6		895-11010		6	WASHER 11 x 20 x 2 mm ARANDELA	ROSETTA PIANA ANILHA	RONDELLE SLUITRING	SCHEIBE FLADSKIVE	9720
		445991A1		1	KIT, SHIM Inc. 10 JUEGO DE CALCES	KIT SPESSORE JUEGO DE CALCES	JEU DE CALES PACKAGE, SHIMS	EINSTELLSCHEIBEN, SC KIT, AFSTANDSSTYKKE	P688
10		444805A1		1	SHIM 0,152 mm SUPLEMENTO	SPESSORE CALCO DE AFINACAO	CALE D'EPAISSEUR DIKTEPLAAT	EINSTELLSCHEIBCHEN MELLEMLAEG	198S
10		444806A1		1	SHIM 0.178 mm SUPLEMENTO	SPESSORE CALCO DE AFINACAO	CALE D'EPAISSEUR DIKTEPLAAT	EINSTELLSCHEIBCHEN MELLEMLAEG	198S
10		444807A1		1	SHIM 0,203 mm SUPLEMENTO	SPESSORE CALCO DE AFINACAO	CALE D'EPAISSEUR DIKTEPLAAT	EINSTELLSCHEIBCHEN MELLEMLAEG	198S
10		444809A1		1	SHIM 0,635 mm SUPLEMENTO	SPESSORE CALCO DE AFINACAO	CALE D'EPAISSEUR DIKTEPLAAT	EINSTELLSCHEIBCHEN MELLEMLAEG	198S
15		446759A1		1	SHIELD PROTECCION	PROTEZIONE PROTECCAO	PROTECTION AFSCHERMING	SCHUTZ BESKYTTELSESKÆRM	224P
16		225810A1		1	COVER TAPADERA	COPERCHIO COBERTA	COUVERCLE DEKSEL	DECKEL DÆKSEL	265C
17		139327C1		4	CLIP SUJETADOR	FERMAGLIO FIXADOR	CLIP KLEM	KLAMMER KLIPS	045F
20		444798A2		1	SHAFT 45 mm (1-3/4 in) EJE	ALBERO VEIO	ARBRE AS	WELLE AKSEL	016A
21		444801A1		1	COVER TAPADERA	COPERCHIO COBERTA	COUVERCLE DEKSEL	DECKEL DÆKSEL	265C
22		446268A1		2	BEARING, CONE CONO	CONO DEL CUSCINETTC CONE	CONE DE ROULEMENT KEGEL	LAGERKONUS LEJEKONUS	237C
23		446269A1		2	BEARING, CUP PISTA DE RODAMIENTO	ANELLO CUSCINETTO ANILHA ROLAMENTO	CUVETTE ROULEMENT LAGER, CUP	LAGERSCHALE LEJERING	062A
30		225820A1		1	SEAL, OIL JUNTA DE ACEITE	PARAOLIO VEDADOR DE OLEO	JOINT D'HUILE OIL-SEAL	ÖLDICHTUNG OLIESEGL	P278
32		828-12045		8	SCREW M12 x 45; 10.9 TORNILLO	VITE PARAFUSO	VIS SCHROEF	SCHRAUBE SKRUE	7450

06-45		p1	11/04

POWER TAKE OFF ASSEMBLY - SHIELDS
GRUPPO DELLA PTO - PROTEZIONI
PRISE DE FORCE - GARANTS
ZAPFWELLENABDECKUNGEN

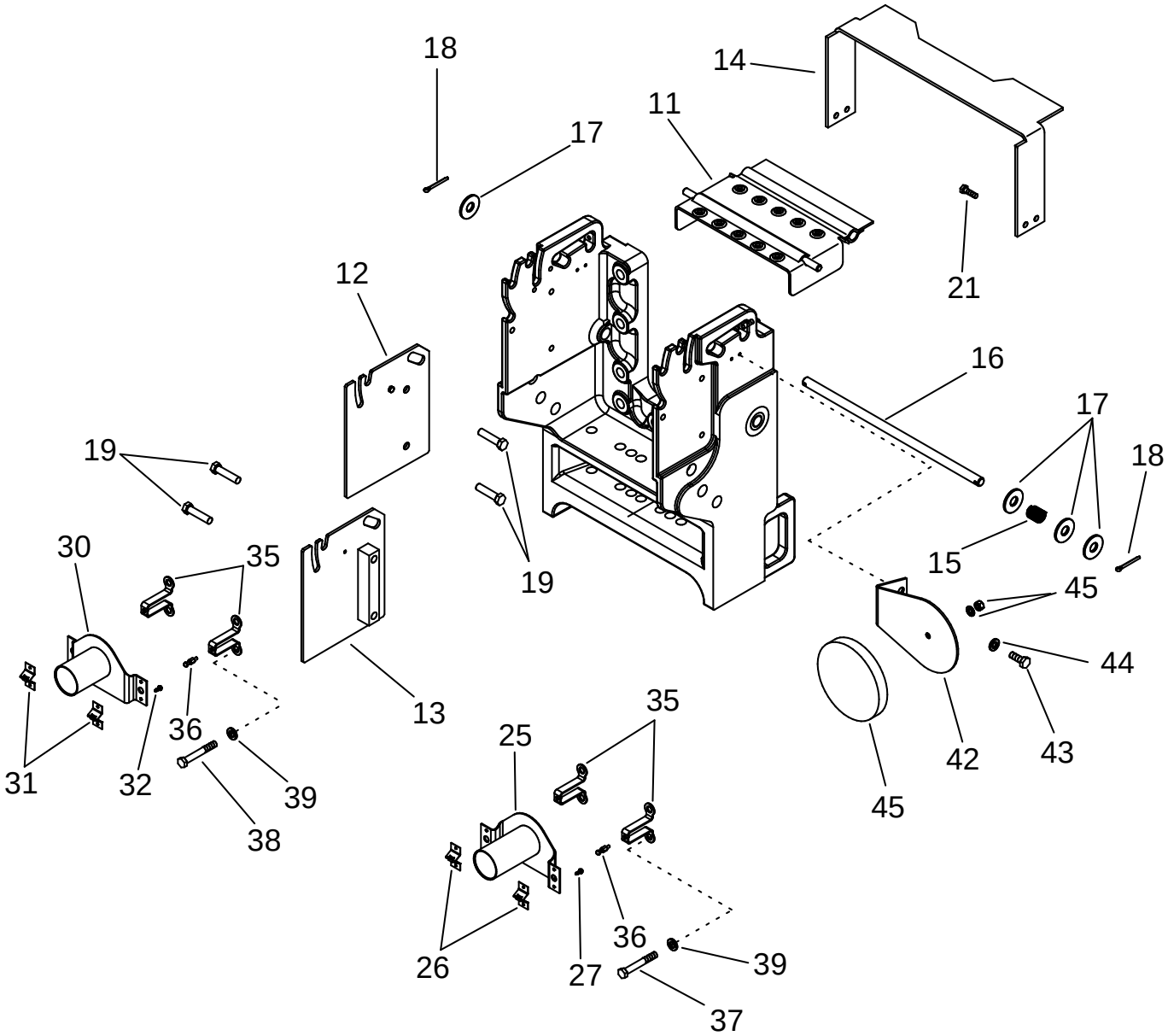

CONJUNTO DE LA TOMA DE FUERZA - PROTECTORES
CONJUNTO DA TOMADA DE FORÇA - PROTECÇÕES
AFTAKAS - SCHERMEN
KRAFTOVERFØRINGSSAMLING - SKÆRME

R	N	P.N.	MOD	Q	Description Denominacion	Descrizione Denominação	Description Beschrijving	Bezeichnung Beskrivelse	L.C.
11		275108A5		1	PROTECTION PLATE CHAPA PROTECCION	PIASTRA, PROTETTIVA CHAPA PROTE O	TOLE-PROTECTION SHIELD	SCHUTZBLECH SHIELD	Z647
12		275257A4		1	PLATE ASSY. Left Hand PLACA (CONJUNTO)	PIASTRA, COMPLESSIVO PLACA CONJUNTO	PLAQUE (ASSEMBLEE) PLATE ASSY.	PLATTE (KPLT.) PLATE ASSY.	P433
13		275258A4		1	PLATE ASSY. Right Hand PLACA (CONJUNTO)	PIASTRA, COMPLESSIVO PLACA CONJUNTO	PLAQUE (ASSEMBLEE) PLATE ASSY.	PLATTE (KPLT.) PLATE ASSY.	P433
14		377751A2		1	PROTECTION PLATE CHAPA PROTECCION	PIASTRA, PROTETTIVA CHAPA PROTE O	TOLE-PROTECTION SHIELD	SCHUTZBLECH SHIELD	Z647
15		179657A2		1	SPRING RESORTE	MOLLA MOLA	RESSORT VEER	FEDER FJEDER	100M
16		225672A2		1	ROD VARILLA	ASTA HASTE	TRINGLE STANG	STANGE STANG	090A
17		495-21069		4	WASHER 11/16 x 1-3/4 x 9/64				
						ROSETTA PIANA	RONDELLE	SCHEIBE	9720
					ARANDELA	ANILHA	SLUITRING	FLADSKIVE	
18		733-5040		2	SPLIT PIN/SAFETY PIN 5 x 40 mm				
						PERNO DIVISO	GOUPILLE	SPLINT/STIFT	Z510
					PASADOR	PINO	SPLIT PIN/SAFETY PIN	SPLIT PIN/SAFETY PIN	
19		814-12050		4	SCREW M12 x 50; 8,8 TORNILLO	VITE PARAFUSO	VIS SCHROEF	SCHRAUBE SKRUE	7450
21		614-6016		4	SCREW M6 x 16; 8,8 TORNILLO	VITE PARAFUSO	VIS SCHROEF	SCHRAUBE SKRUE	P136
		311112A4		1	GUARD Single Speed, Inc. 25 - 27				
						RIPARO	GARANT	SCHUTZBLECH	070R
					DEFENSA	PROTECCAO	AFSCHERMING	BESKYTTELSESSKAERM	
25		NSS		1	NOT SERVICED SEPARATELY Shield				
						NON FORNITO SEPARAT	NON FOURNI SEPAREMI	KEIN ERSATZTEIL	064N
					NO SE REPARA SEPARA	NOT SERVICED SEPARA	NIET ALLEEN VERKRIJG	NOT SERVICED SEPARA	
26		1968039C3		2	FASTENER BOTON DE RESORTE	BOTTONE A SCATTO PARAFUSO	ATTACHE DRUKKNOP	SCHALTKNOPF UDLOESERKNAP	123B
27		280-5348		4	SCREW TORNILLO	VITE PARAFUSO	VIS SCHROEF	SCHRAUBE SKRUE	7450
		311113A4		1	GUARD Dual Speed, Inc. 30 - 32				
						RIPARO	GARANT	SCHUTZBLECH	070R
					DEFENSA	PROTECCAO	AFSCHERMING	BESKYTTELSESSKAERM	
30		NSS		1	NOT SERVICED SEPARATELY Shield				
						NON FORNITO SEPARAT	NON FOURNI SEPAREMI	KEIN ERSATZTEIL	064N
					NO SE REPARA SEPARA	NOT SERVICED SEPARA	NIET ALLEEN VERKRIJG	NOT SERVICED SEPARA	
31		1968039C3		2	FASTENER BOTON DE RESORTE	BOTTONE A SCATTO PARAFUSO	ATTACHE DRUKKNOP	SCHALTKNOPF UDLOESERKNAP	123B
32		280-5348		4	SCREW TORNILLO	VITE PARAFUSO	VIS SCHROEF	SCHRAUBE SKRUE	7450
35		308308A1		2	SUPPORT SOPORTE	SUPPORTO SUPORTE	SUPPORT STEUN	STÜTZE BESLAG	300S
36		1977929C1		2	STUD PRISIONERO	PRIGIONIERO PERNE	GOUJON TAPEIND	STEHBOLZEN STOETTEBOLT	210P
37		828-12050		4	SCREW M12 x 50; 10.9 TORNILLO	VITE PARAFUSO	VIS SCHROEF	SCHRAUBE SKRUE	7450

06-45		p2	11/04

POWER TAKE OFF ASSEMBLY - SHIELDS
GRUPPO DELLA PTO - PROTEZIONI
PRISE DE FORCE - GARANTS
ZAPFWELLENABDECKUNGEN

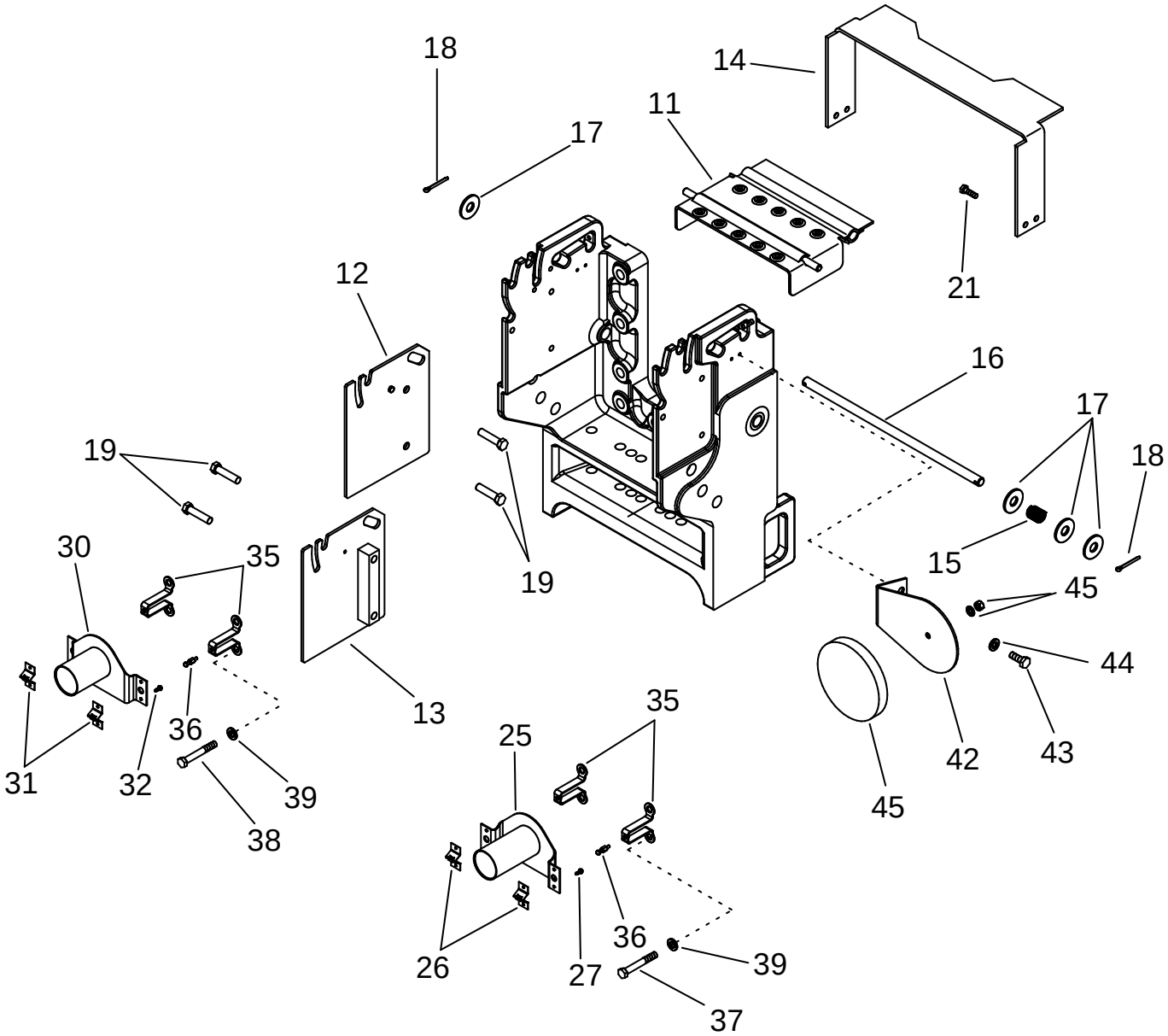

CONJUNTO DE LA TOMA DE FUERZA - PROTECTORES
CONJUNTO DA TOMADA DE FORÇA - PROTECÇÕES
AFTAKAS - SCHERMEN
KRAFTOVERFØRINGSSAMLING - SKÆRME

R	N	P.N.	MOD	Q	Description Denominacion	Descrizione Denominação	Description Beschrijving	Bezeichnung Beskrivelse	L.C.
38		828-12085		4	SCREW M12 x 85; 10.9 TORNILLO	VITE PARAFUSO	VIS SCHROEF	SCHRAUBE SKRUE	7450
39		896-12012		4	WASHER 13,5 x 24 x 3 mm ARANDELA	ROSETTA PIANA ANILHA	RONDELLE SLUITRING	SCHEIBE FLADSKIVE	9720
42		101588A2		2	BRACKET PIEZA DE SOPORTE	STAFFA BRACADEIRA	PATTE FIXATION STEUNBEUGEL	HALTERUNG BESLAG	225S
43		614-6016		4	SCREW M6 x 16; 8,8 TORNILLO	VITE PARAFUSO	VIS SCHROEF	SCHRAUBE SKRUE	P136
44		895-11006		4	WASHER 6,6 x 12 x 1,6 mm ARANDELA	ROSETTA PIANA ANILHA	RONDELLE SLUITRING	BEILAGSCHEIBE FLADSKIVE	131R
45		107484C1		2	REFLECTOR CATADIOPTRICO	CATADIOTTRO RETRO-REFLECTOR	CATADIOPTRE RETRO-REFLECTOR	RÜCKSTRAHLER BAGREFLEKS	090C

06-46		p1	11/04

SOLID STEEL REAR WHEELS
RUOTE POSTERIORI IN ACCIAIO CALMATO
ROUES ARRIÈRE EN ACIER SOLIDE
STAHL-HINTERRÄDER

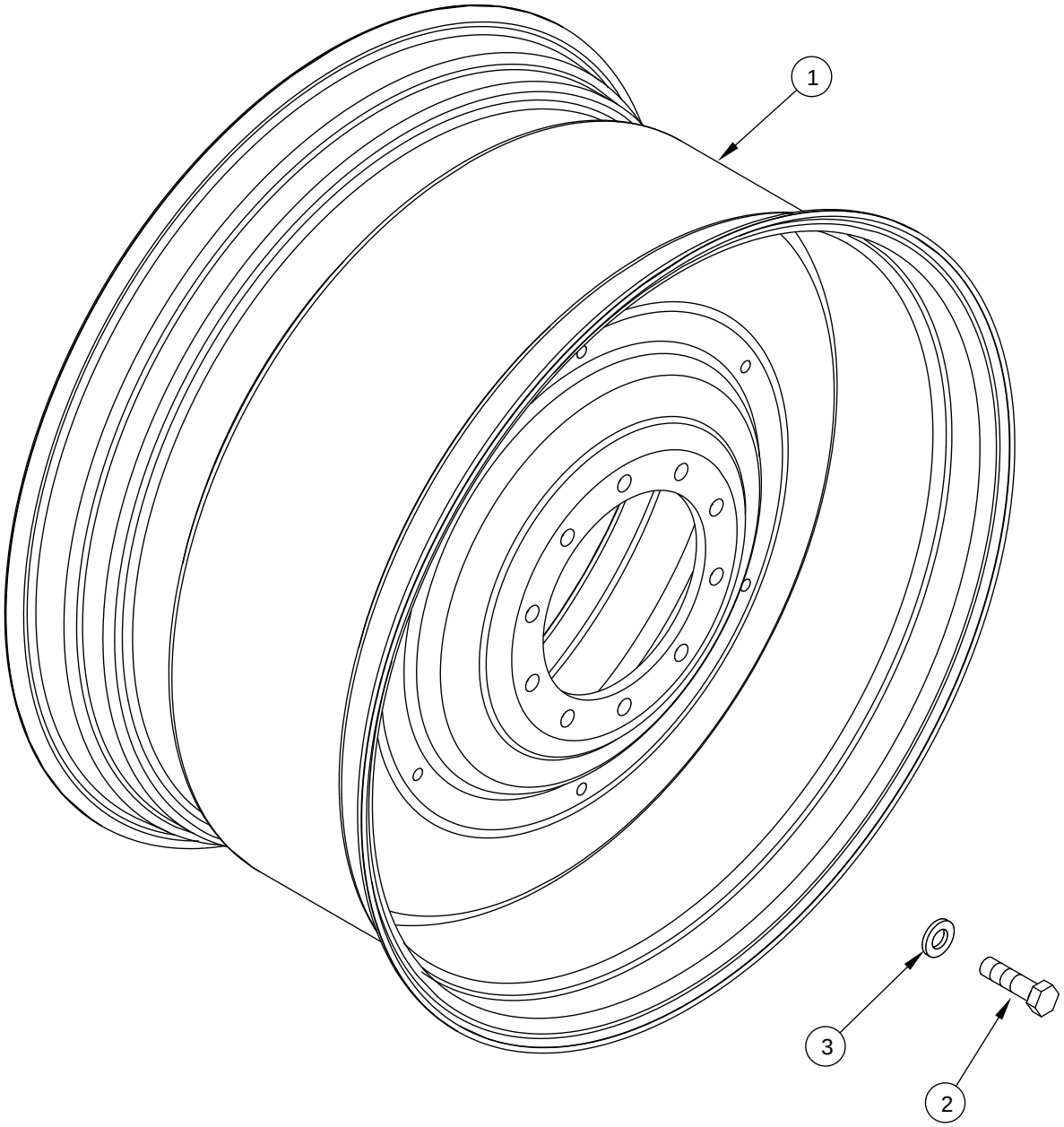

RUEDAS TRASERAS DE ACERO SÓLIDO
RODAS TRASEIRAS DE AÇO SÓLIDO
MASSIEF STALEN ACHTERWIELEN
BAGHJUL AF MASSIVT STÅL

R	N	P.N.	MOD	Q	Description Denominacion	Descrizione Denominação	Description Beschrijving	Bezeichnung Beskrivelse	L.C.
1	1	336726A1		2	RIM MW23Ax38 RIN	CERCHIONE JANTE	JANTE WIELVELG	FELGE RIFLE	7160
1	2	336724A1		2	RIM W18Ax42 RIN	CERCHIONE JANTE	JANTE WIELVELG	FELGE RIFLE	7160
1	3	336725A1		2	RIM MW20Ax42 RIN	CERCHIONE JANTE	JANTE WIELVELG	FELGE RIFLE	7160
1	4	336728A1		2	RIM MW23Ax42 RIN	CERCHIONE JANTE	JANTE WIELVELG	FELGE RIFLE	7160
1	5	336727A1		2	RIM W16Ax46 RIN	CERCHIONE JANTE	JANTE WIELVELG	FELGE RIFLE	7160
2		827-22080		20	SCREW M22 x 80; 10.9 TORNILLO	VITE PARAFUSO	VIS SCHROEF	SCHRAUBE SKRUE	7450
3		496-31094		20	WASHER 15/16 x 1-3/4 x 7/32 ARANDELA	ROSETTA PIANA ANILHA	RONDELLE SLUITRING	SCHEIBE FLADSKIVE	9720

(1) For Tires 650/85R38, 710/70R38
(2) For Tires 20.8R42
(3) For Tires 620/70R42
(4) For Tires 710/70R42
(5) For Tires 520/85R46

06-47		p1	11/04

HUB ASSEMBLY - REAR WHEEL
GRUPPO DEL MOZZO - RUOTA POSTERIORE
MOYEU DES ROUES ARRIÈRE
HINTERRADNABE

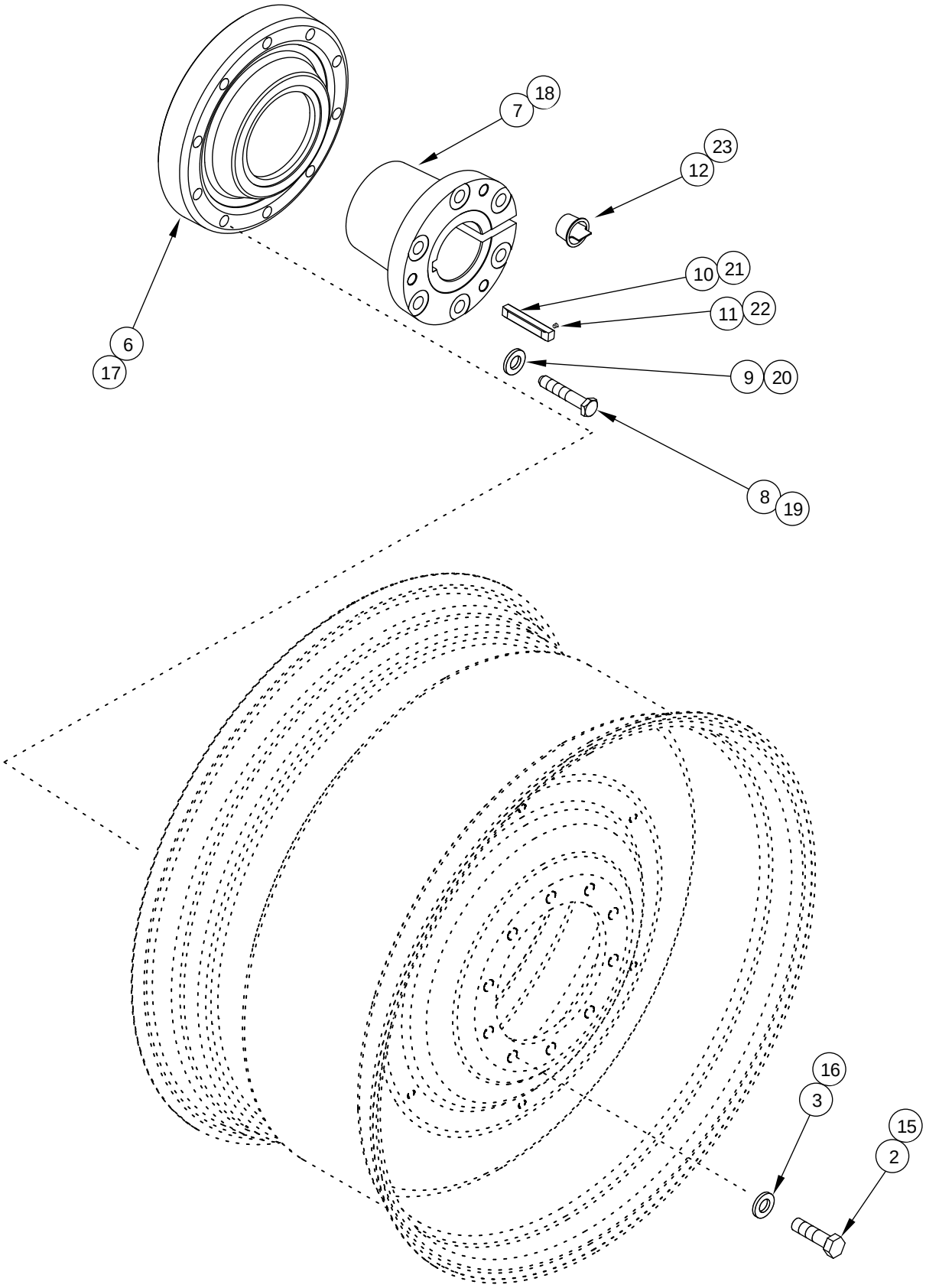

CONJUNTO DEL CUBO - RUEDA TRASERA
CONJUNTO DO CUBO - RODA TRASEIRA
NAAF - ACHTERWIEL
NAVSAMLING - BAGHJUL

R	N	P.N.	MOD	Q	Description Denominacion	Descrizione Denominação	Description Beschrijving	Bezeichnung Beskrivelse	L.C.
	1	**435955A1**		1	PACKAGE Hub For 102 mm (4 in) axle, Inc. 2 - 11				
						CONFEZIONE	COLIS	PACKUNG	5920
					PAQUETE	PACOTE	PACKAGE	PAKNING	
2		**827-22080**		20	SCREW M22 x 80; 10.9	VITE	VIS	SCHRAUBE	7450
					TORNILLO	PARAFUSO	SCHROEF	SKRUE	
3		**496-31094**		20	WASHER 15/16 x 1-3/4 x 7/32				
						ROSETTA PIANA	RONDELLE	SCHEIBE	9720
					ARANDELA	ANILHA	SLUITRING	FLADSKIVE	
6		**405812A1**		2	HUB	MOZZO	MOYEU	NABE	135M
					CUBO	CUBO	NAAF	NAV	
7		**405815A1**		2	BUSHING 102 mm (4 in)	BOCCOLA	BAGUE	BUECHSE	095B
					CASQUILLO	CASQUILHO	LAGERBUS	BOESNING	
8		**228273A1**		12	BOLT M20 x 110; 10,9	BULLONE	BOULON	SCHAUBENBOLZEN	140B
					TORNILLO	PARAFUSO	BOUT	SKRUE	
9		**396-31081**		12	WASHER 13/16 x 1-1/2 x 7/32				
						ROSETTA PIANA	RONDELLE	BEILAGSCHEIBE	131R
					ARANDELA	ANILHA	SLUITRING	FLADSKIVE	
10		**A63219**		2	KEY 3/4 x 6	LINGUETTA	CLAVETTE	SCHLÜSSEL	060L
					CHAVETA	CHAVETA	INLEGSPIE	KILE	
11		**38-11608**		2	PIN, ROLL 1/4 x 1/2	SPINA ELASTICA	GOUPILLE ELASTIQUE	SPANNSTIFT	P613
					PASADOR TUBOLAR	TROCO	SPANSTIFT	SPLIT	
12		**303401A1**		6	PLUG	TAPPO	BOUCHON	STOPFEN	050T
					TAPÓN	BUJÃO	PLUG	PROP	
	1	**435956A1**		1	PACKAGE Hub For 115 mm (4-1/2 in) axle, Inc. 15 - 23				
						CONFEZIONE	COLIS	PACKUNG	5920
					PAQUETE	PACOTE	PACKAGE	PAKNING	
15		**827-22080**		20	SCREW M22 x 80; 10.9	VITE	VIS	SCHRAUBE	7450
					TORNILLO	PARAFUSO	SCHROEF	SKRUE	
16		**496-31094**		20	WASHER 15/16 x 1-3/4 x 7/32				
						ROSETTA PIANA	RONDELLE	SCHEIBE	9720
					ARANDELA	ANILHA	SLUITRING	FLADSKIVE	
17		**405812A1**		2	HUB	MOZZO	MOYEU	NABE	135M
					CUBO	CUBO	NAAF	NAV	
18		**405816A1**		2	BUSHING 115 mm (4-1/2 in)				
						BOCCOLA	BAGUE	BUECHSE	095B
					CASQUILLO	CASQUILHO	LAGERBUS	BOESNING	
19		**228273A1**		12	BOLT M20 x 110; 10,9	BULLONE	BOULON	SCHAUBENBOLZEN	140B
					TORNILLO	PARAFUSO	BOUT	SKRUE	
20		**396-31081**		12	WASHER 13/16 x 1-1/2 x 7/32				
						ROSETTA PIANA	RONDELLE	BEILAGSCHEIBE	131R
					ARANDELA	ANILHA	SLUITRING	FLADSKIVE	
21		**A63219**		2	KEY 3/4 x 6	LINGUETTA	CLAVETTE	SCHLÜSSEL	060L
					CHAVETA	CHAVETA	INLEGSPIE	KILE	
22		**38-11608**		2	PIN, ROLL 1/4 x 1/2	SPINA ELASTICA	GOUPILLE ELASTIQUE	SPANNSTIFT	P613
					PASADOR TUBOLAR	TROCO	SPANSTIFT	SPLIT	
23		**303401A1**		6	PLUG	TAPPO	BOUCHON	STOPFEN	050T
					TAPÓN	BUJÃO	PLUG	PROP	

(1) Order From Machinery Price List

SPACER - DUAL REAR WHEELS
DISTANZIALE - RUOTE POSTERIORI DOPPIE
ENTRETOISE DES ROUES JUMELÉES ARRIÈRE
DISTANZSTÜCK - HINTERE ZWILLINGSRÄDER

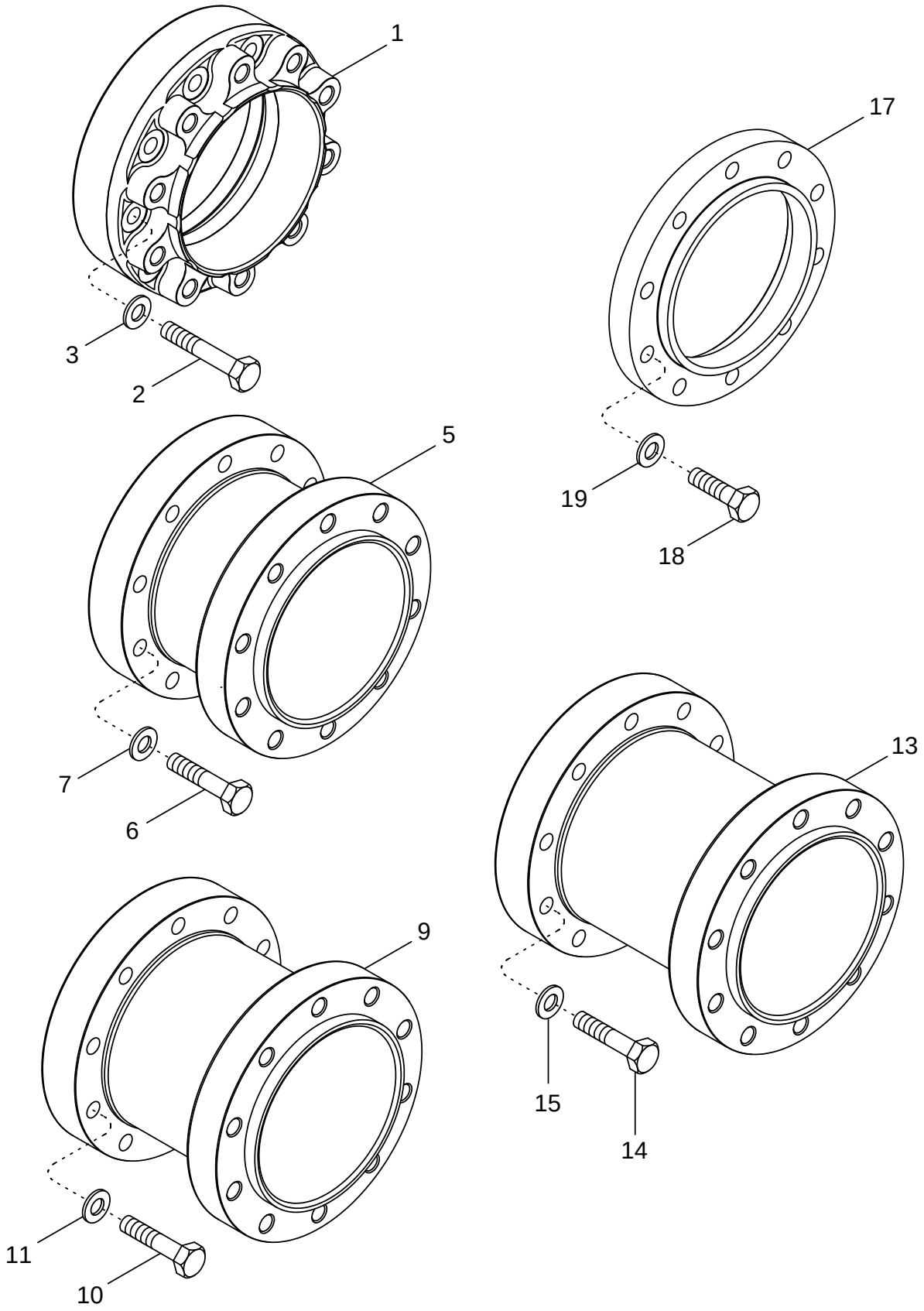

ESPACIADOR - RUEDAS TRASERAS DOBLES
ESPAÇADOR - RODAS TRASEIRAS DUPLAS
AFSTANDHOUDER - DUBBELE ACHTERWIELEN
MELLEMSTYKKE - DOBBELTE BAGHJUL

R	N	P.N.	MOD	Q	Description Denominacion	Descrizione Denominação	Description Beschrijving	Bezeichnung Beskrivelse	L.C.
	1	**441597A1**		1	SPACER Inc. 1 - 3	DISTANZIALE	ENTRETOISE	DISTANZSTÜCK	8090
					ESPACIADOR	ESPACADOR	AFSTANDSRING	AFSTANDSSTYKKE	
1		**405822A1**		2	SPACER 127 mm (5 in)	DISTANZIALE	ENTRETOISE	DISTANZSTÜCK	075D
					SEPARADOR	ESPACADOR	AFSTANDSRING	AFSTANDSSTYKKE	
2		**827-22160**		20	SCREW M22 x 160; 10.9	VITE	VIS	SCHRAUBE	7450
					TORNILLO	PARAFUSO	SCHROEF	SKRUE	
3		**496-31094**		20	WASHER 15/16 x 1-3/4 x 7/32				
						ROSETTA PIANA	RONDELLE	SCHEIBE	9720
					ARANDELA	ANILHA	SLUITRING	FLADSKIVE	
	1	**441598A1**		1	SPACER Inc. 5 - 7	DISTANZIALE	ENTRETOISE	DISTANZSTÜCK	8090
					ESPACIADOR	ESPACADOR	AFSTANDSRING	AFSTANDSSTYKKE	
5		**405823A1**		2	SPACER 254 mm (10 in)	DISTANZIALE	ENTRETOISE	DISTANZSTÜCK	075D
					SEPARADOR	ESPACADOR	AFSTANDSRING	AFSTANDSSTYKKE	
6		**827-22130**		20	SCREW M22 x 130; 10.9	VITE	VIS	SCHRAUBE	7450
					TORNILLO	PARAFUSO	SCHROEF	SKRUE	
7		**496-31094**		20	WASHER 15/16 x 1-3/4 x 7/32				
						ROSETTA PIANA	RONDELLE	SCHEIBE	9720
					ARANDELA	ANILHA	SLUITRING	FLADSKIVE	
	1	**441599A1**		1	SPACER Inc. 9 - 11	DISTANZIALE	ENTRETOISE	DISTANZSTÜCK	8090
					ESPACIADOR	ESPACADOR	AFSTANDSRING	AFSTANDSSTYKKE	
9		**405824A1**		2	SPACER 330 mm (13 in)	DISTANZIALE	ENTRETOISE	DISTANZSTÜCK	075D
					SEPARADOR	ESPACADOR	AFSTANDSRING	AFSTANDSSTYKKE	
10		**827-22130**		20	SCREW M22 x 130; 10.9	VITE	VIS	SCHRAUBE	7450
					TORNILLO	PARAFUSO	SCHROEF	SKRUE	
11		**496-31094**		20	WASHER 15/16 x 1-3/4 x 7/32				
						ROSETTA PIANA	RONDELLE	SCHEIBE	9720
					ARANDELA	ANILHA	SLUITRING	FLADSKIVE	
	1	**441600A1**		1	SPACER Inc. 13 - 15	DISTANZIALE	ENTRETOISE	DISTANZSTÜCK	075D
					SEPARADOR	ESPACADOR	AFSTANDSRING	AFSTANDSSTYKKE	
13		**405825A1**		2	SPACER 381 mm (15 in)	DISTANZIALE	ENTRETOISE	DISTANZSTÜCK	075D
					SEPARADOR	ESPACADOR	AFSTANDSRING	AFSTANDSSTYKKE	
14		**827-22130**		20	SCREW M22 x 130; 10.9	VITE	VIS	SCHRAUBE	7450
					TORNILLO	PARAFUSO	SCHROEF	SKRUE	
15		**496-31094**		20	WASHER 15/16 x 1-3/4 x 7/32				
						ROSETTA PIANA	RONDELLE	SCHEIBE	9720
					ARANDELA	ANILHA	SLUITRING	FLADSKIVE	
	2	**NSS**		1	NOT SERVICED SEPARATELY Spacer Extension, Inc. 17 - 19				
						NON FORNITO SEPARAT	NON FOURNI SEPAREMI	KEIN ERSATZTEIL	064N
					NO SE REPARA SEPARA	NOT SERVICED SEPARA	NIET ALLEEN VERKRIJG	NOT SERVICED SEPARA	
17		**NSS**		2	NOT SERVICED SEPARATELY Spacer, 38 mm (1-1/2 in)				
						NON FORNITO SEPARAT	NON FOURNI SEPAREMI	KEIN ERSATZTEIL	064N
					NO SE REPARA SEPARA	NOT SERVICED SEPARA	NIET ALLEEN VERKRIJG	NOT SERVICED SEPARA	
18		**827-22120**		20	SCREW M22 x 120; 10,9	VITE	VIS	SCHRAUBE	040V
					TORNILLO	PARAFUSO	SCHROEF	SKRUE	
19		**496-31094**		20	WASHER 15/16 x 1-3/4 x 7/32				
						ROSETTA PIANA	RONDELLE	SCHEIBE	9720
					ARANDELA	ANILHA	SLUITRING	FLADSKIVE	

(1) Order From Machinery Price List
(2) Order 719605006 From Machinery Price List

06-49		p1	11/04

REAR WHEEL WEIGHTS
PESI DELLE RUOTE POSTERIORI
MASSES D'ALOURDISSEMENT DES ROUES ARRIÈRE
HINTERRADGEWICHTE

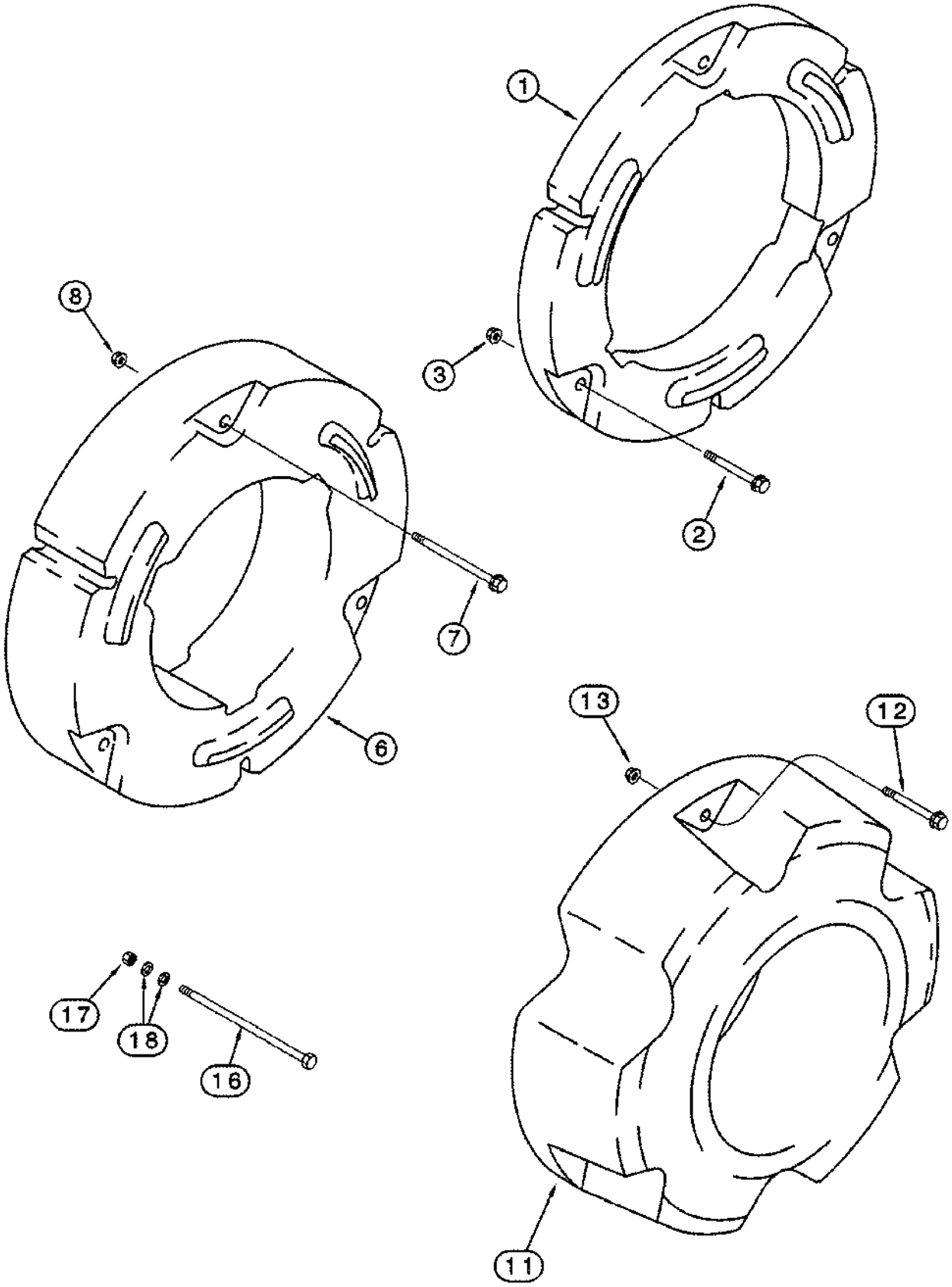

PESOS DE LAS RUEDAS TRASERAS
PESOS PARA AS RODAS TRASEIRAS
ACHTERWIELGEWICHTEN
BAGHJULSVÆGTE

R	N	P.N.	MOD	Q	Description Denominacion	Descrizione Denominação	Description Beschrijving	Bezeichnung Beskrivelse	L.C.
	1	**435961A1**		1	WHEEL WEIGHT 200 lb, Inc. 1 - 3				
						ZAVORRE RUOTE	MASSE ROUE	RADGEWICHT	P410
					CONTRAPESO DE RUED	PESO	WIELGEWICHTEN	HIULVÆGT	
1		**405828A1**		2	WEIGHT	ZAVORRA	POIDS	GEWICHT	010Z
					LASTRE	BALASTRO	BALLAST	FRONTVAEGT	
2		**857-16110**		6	BOLT M16 x 110; 10.9	BULLONE	BOULON	SCHAUBENBOLZEN	0810
					TORNILLO	PARAFUSO	BOUT	SKRUE	
3		**832-44416**		6	NUT M16; 10	DADO	ECROU	MUTTER	010D
					TUERCA	PORCA	MOER	MØTRIK	
	1	**435962A1**		1	WEIGHT 500 lb, Inc. 6 - 8	ZAVORRA	POIDS	GEWICHT	010Z
					LASTRE	BALASTRO	BALLAST	FRONTVAEGT	
6		**405829A1**		2	WEIGHT	ZAVORRA	POIDS	GEWICHT	010Z
					LASTRE	BALASTRO	BALLAST	FRONTVAEGT	
7		**857-16180**		6	BOLT M16 x 180; 10.9	BULLONE	BOULON	SCHAUBENBOLZEN	0810
					TORNILLO	PARAFUSO	BOUT	SKRUE	
8		**832-44416**		6	NUT M16; 10	DADO	ECROU	MUTTER	010D
					TUERCA	PORCA	MOER	MØTRIK	
	1	**435963A1**		1	WHEEL WEIGHT 1000 lb, Inc. 11 - 13				
						ZAVORRE RUOTE	MASSE ROUE	RADGEWICHT	P410
					CONTRAPESO DE RUED	PESO	WIELGEWICHTEN	HIULVÆGT	
11		**405830A1**		2	WEIGHT	ZAVORRA	POIDS	GEWICHT	010Z
					LASTRE	BALASTRO	BALLAST	FRONTVAEGT	
12		**857-16110**		6	BOLT M16 x 110; 10.9	BULLONE	BOULON	SCHAUBENBOLZEN	0810
					TORNILLO	PARAFUSO	BOUT	SKRUE	
13		**832-44416**		6	NUT M16; 10	DADO	ECROU	MUTTER	010D
					TUERCA	PORCA	MOER	MØTRIK	
16		**413-1088**		6	BOLT 5/8 x 5-1/2	BULLONE	BOULON	SCHAUBENBOLZEN	140B
					TORNILLO	PARAFUSO	BOUT	SKRUE	
16		**413-10136**		6	BOLT 5/8 x 8-1/2	BULLONE	BOULON	SCHAUBENBOLZEN	140B
					TORNILLO	PARAFUSO	BOUT	SKRUE	
17		**425-2810**		6	NUT 5/8	DADO	ECROU	MUTTER	5780
					TUERCA	PORCA	MOER	MØTRIK	
18		**496-21066**		12	WASHER 21/32 x 1-5/16 x 5/32				
						ROSETTA PIANA	RONDELLE	SCHEIBE	9720
					ARANDELA	ANILHA	SLUITRING	FLADSKIVE	

(1) Order From Machinery Price List

SECTION INDEX

07-01	BRAKES - PEDAL BRAKE
07-02	BRAKES - HYDRAULIC SYSTEM, WITHOUT TRAILER BRAKES
07-03	BRAKES - HYDRAULIC SYSTEM, WITH HYDRAULIC TRAILER BRAKES
07-04	BRAKES - HYDRAULIC SYSTEM, WITH PNEUMATIC TRAILER BRAKES
07-05	BRAKES - CONTROL VALVE
07-06	BRAKES - DIFFERENTIAL
07-07	PARK AND EMERGENCY BRAKE - LEVER AND LINKAGE
07-08	PARK AND EMERGENCY BRAKE - HYDRAULIC SYSTEM
07-09	PARK AND EMERGENCY BRAKE - VALVE ASSEMBLY
07-10	PARK AND EMERGENCY BRAKE - BRAKE ASSEMBLY
07-11	PARK BRAKE - RELEASE, BSN AJB0355923
07-12	PARK BRAKE - RELEASE, ASN AJB0355923
07-13	TRAILER BRAKES - HYDRAULIC, EXCEPT ITALY
07-14	TRAILER BRAKES - HYDRAULIC, ITALY ONLY
07-15	TRAILER BRAKES - PNEUMATIC, AIR COMPRESSOR MOUNTING AND DRIVE
07-16	TRAILER BRAKES - PNEUMATIC, RESERVOIR, EXCEPT ITALY
07-17	TRAILER BRAKES - PNEUMATIC, RESERVOIR, ITALY ONLY
07-18	TRAILER BRAKES - PNEUMATIC, VALVES
07-19	TRAILER BRAKES - PNEUMATIC, COUPLERS, EXCEPT ITALY
07-20	TRAILER BRAKES - PNEUMATIC, COUPLERS, ITALY ONLY

07-01		p1	12/02

BRAKES - PEDAL BRAKE
FRENI - FRENO A PEDALE
FREINS - PÉDALE DE FREIN
BREMSEN - PEDALBREMSE

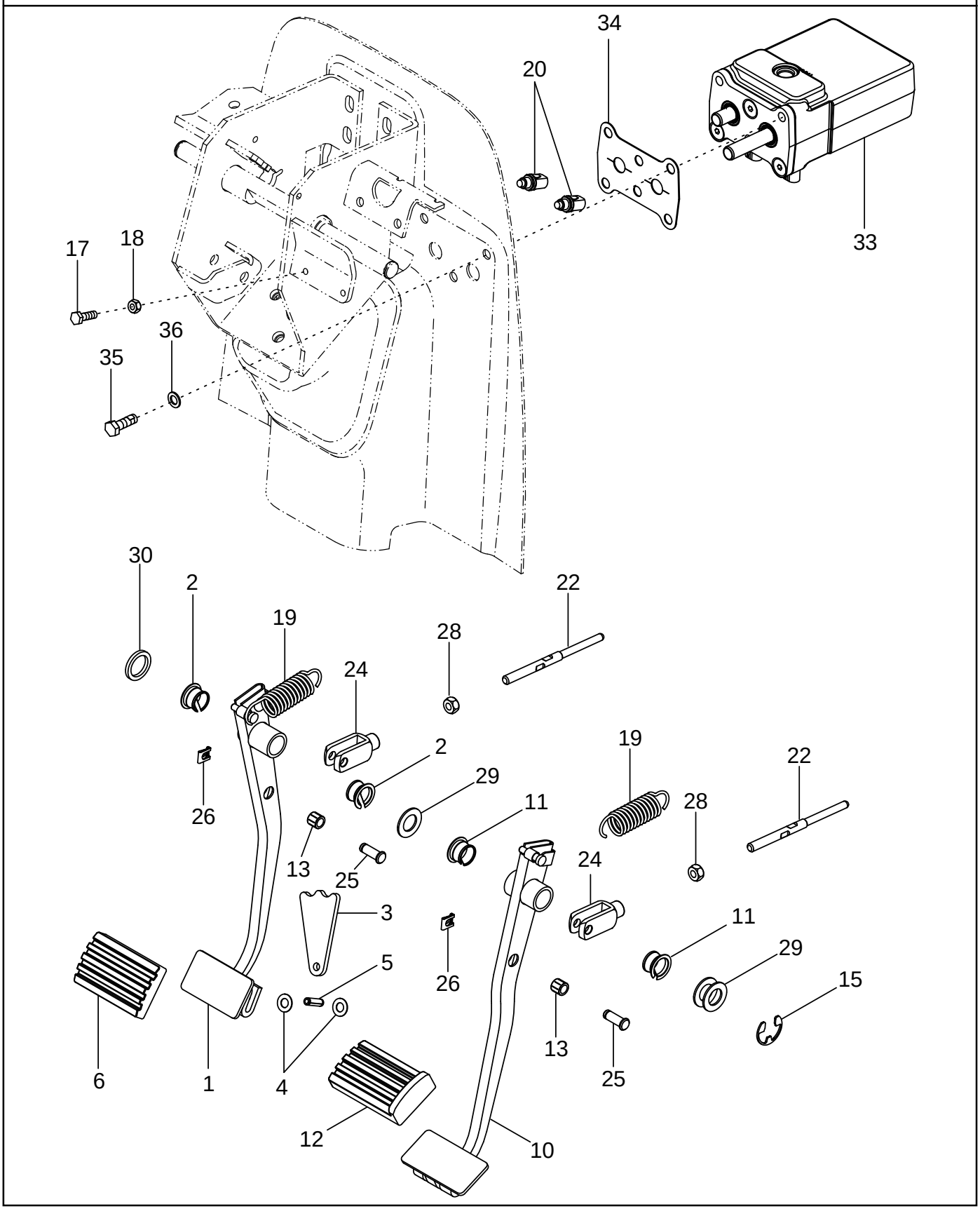

FRENOS - PEDAL DEL FRENO
TRAVÕES - PEDAL DO TRAVÃO
REMMEN - PEDAALREM
BREMSER - PEDALBREMSE

R	N	P.N.	MOD	Q	Description Denominacion	Descrizione Denominação	Description Beschrijving	Bezeichnung Beskrivelse	L.C.
1		400859A3		1	PEDAL ASSY. Left Hand, Inc. 2 - 7				
						GRUPPO PEDALE	PEDALE (ASSEMBLEE)	PEDAL (KPLT.)	P523
					PEDAL (CONJUNTO)	PEDAL CONJUNTO	PEDAL ASSY.	PEDAL ASSY.	
2		1990753C1		2	PLASTIC RING	ANELLO DI PLASTICA	BAGUE-PLASTIQUE	KUNSTSTOFFRING	Z390
					CASQUILLO PLASTICO	ANEL DE PLASTICO	PLASTIC RING	PLASTIC RING	
3		188419A1		1	ARM	BRACCIO	BRAS	AUSLEGER	130B
					BRAZO	BRAÇO	ARM	ARM	
4		906045R1		2	WASHER 10,2 x 20 x 0,8 mm				
						ROSETTA PIANA	RONDELLE	BEILAGSCHEIBE	131R
					ARANDELA	ANILHA	SLUITRING	FLADSKIVE	
5		738-1825		1	SPLIT PIN/SAFETY PIN 8 x 25				
						PERNO DIVISO	GOUPILLE	SPLINT/STIFT	Z510
					PASADOR	PINO	SPLIT PIN/SAFETY PIN	SPLIT PIN/SAFETY PIN	
6		1999381C1		1	PAD, RUBBER	TAMPONE DI GOMMA	PLAQUE CAOUTCHOUC	GUMMIPLATTE	025T
					PLACA, CAUCHO	ALMOFADA DE BORRAC	RUBBEREN LAGERKUSS	GUMMIKLODS	
7		298715A1		1	BUSHING	BOCCOLA	BAGUE	BUECHSE	095B
					CASQUILLO	CASQUILHO	LAGERBUS	BOESNING	
10		400862A3		1	PEDAL ASSY. Right Hand, Inc. 11 - 13				
						GRUPPO PEDALE	PEDALE (ASSEMBLEE)	PEDAL (KPLT.)	P523
					PEDAL (CONJUNTO)	PEDAL CONJUNTO	PEDAL ASSY.	PEDAL ASSY.	
11		1990753C1		2	PLASTIC RING	ANELLO DI PLASTICA	BAGUE-PLASTIQUE	KUNSTSTOFFRING	Z390
					CASQUILLO PLASTICO	ANEL DE PLASTICO	PLASTIC RING	PLASTIC RING	
12		1999382C1		1	PAD, RUBBER	TAMPONE DI GOMMA	PLAQUE CAOUTCHOUC	GUMMIPLATTE	025T
					PLACA, CAUCHO	ALMOFADA DE BORRAC	RUBBEREN LAGERKUSS	GUMMIKLODS	
13		298715A1		1	BUSHING	BOCCOLA	BAGUE	BUECHSE	095B
					CASQUILLO	CASQUILHO	LAGERBUS	BOESNING	
15		800-3120		1	RING, SNAP 20 mm	ANELLO ELASTICO	ANNEAU D'ARRÊT	SICHERUNGSRING	054A
					ANILLO DE RESORTE	ANEL	RING, SNAP	LÅSERING	
17		614-8025		2	SCREW M8 x 25; 8.8	VITE	VIS	SCHRAUBE	P136
					TORNILLO	PARAFUSO	SCHROEF	SKRUE	
18		829-1408		2	NUT M8; 10	DADO	ECROU	MUTTER	010D
					TUERCA	PORCA	MOER	MØTRIK	
19		236504A2		2	SPRING	MOLLA	RESSORT	FEDER	100M
					RESORTE	MOLA	VEER	FJEDER	
20		279265A2		2	SWITCH	INTERRUTTORE	CONTACTEUR	SCHALTER	075I
					CONTACTOR	INTERRUPTOR	SCHAKELAAR	KONTAKT	
22		400865A1		2	ROD	ASTA	TRINGLE	STANGE	090A
					VARILLA	HASTE	STANG	STANG	
24		236323A1		2	CLEVIS	FORCELLINO	FOURCHETTE	GABELKOPF	084F
					HORQUILLA PEQUENA	FORQUILHA	GAFFEL	GAFFELBOLT	
25		192869A1		2	PIN, CLEVIS	SPINA, PER FORCELLA	AXE DE CHAPE	GABELSTIFT	P694
					PASADOR DE HORQUILL	CUPILHA	PIN, CLEVIS	GAFFELBOLT	
26		193182A1		2	CLIP	FERMAGLIO	CLIP	KLAMMER	045F
					SUJETADOR	FIXADOR	KLEM	KLIPS	
28		829-1410		2	NUT M10; 10.9	DADO	ECROU	MUTTER	5780
					TUERCA	PORCA	MOER	MØTRIK	
29		T102217		AR	WASHER	ROSETTA PIANA	RONDELLE	BEILAGSCHEIBE	131R
					ARANDELA	ANILHA	SLUITRING	FLADSKIVE	

BRAKES - PEDAL BRAKE
FRENI - FRENO A PEDALE
FREINS - PÉDALE DE FREIN
BREMSEN - PEDALBREMSE

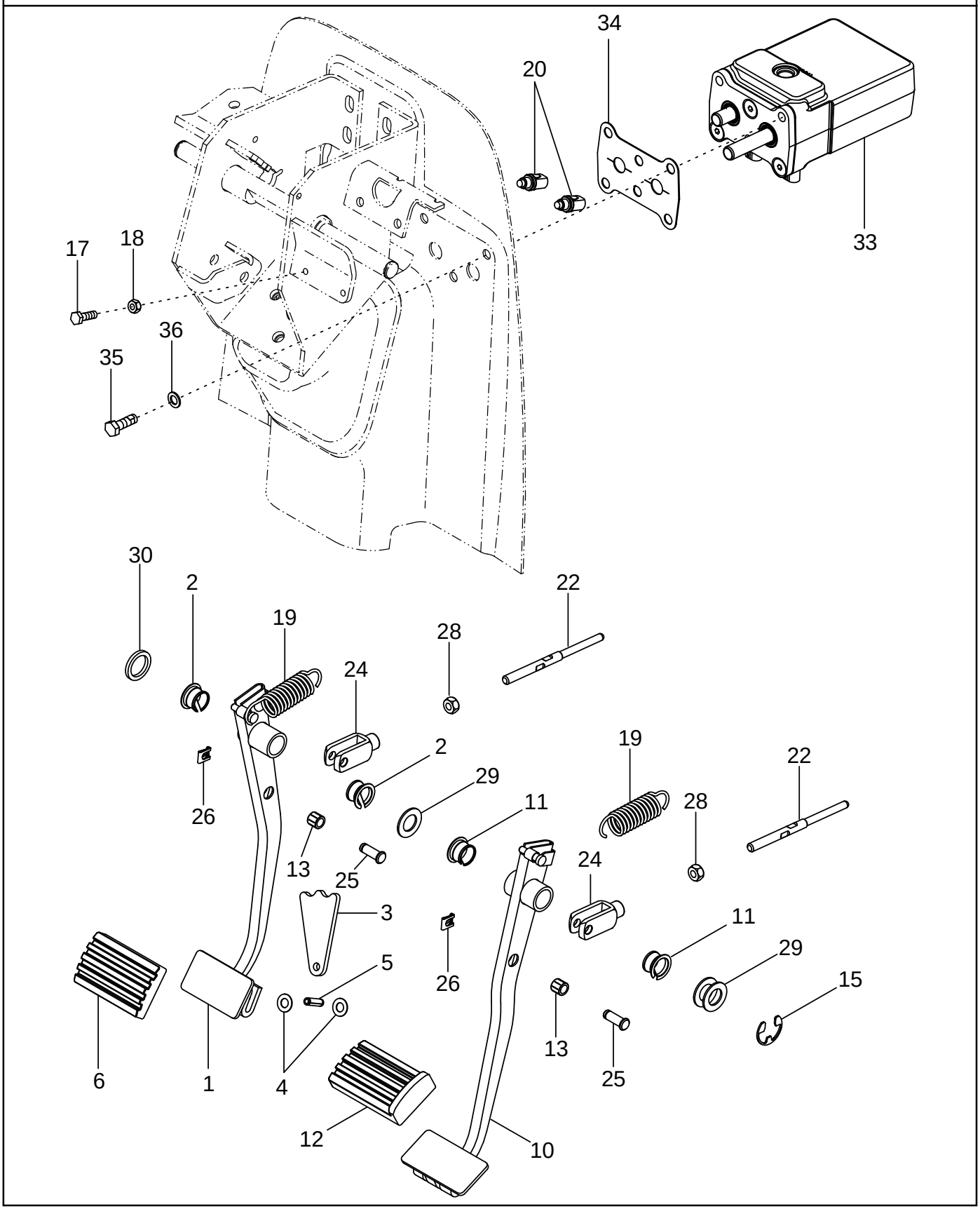

FRENOS - PEDAL DEL FRENO
TRAVÕES - PEDAL DO TRAVÃO
REMMEN - PEDAALREM
BREMSER - PEDALBREMSE

R	N	P.N.	MOD	Q	Description Denominacion	Descrizione Denominação	Description Beschrijving	Bezeichnung Beskrivelse	L.C.
30		258242A1		1	WASHER ARANDELA	ROSETTA PIANA ANILHA	RONDELLE SLUITRING	BEILAGSCHEIBE FLADSKIVE	131R
33	1	397101A6		1	VALVE Brake VALVULA	VALVOLA VALVULA	SOUPAPE VALVE	VENTIL VALVE	9620
34		407142A1		1	GASKET JUNTA HERMETICA	GUARNIZIONE JUNTA	JOINT DICHTINGSSTUK	DICHTUNG, FLACH PAKNING	123G
35		806-10030		3	SCREW M10 x 30; 10.9 TORNILLO	VITE PARAFUSO	VIS SCHROEF	SCHRAUBE SKRUE	7450
36		895-18010		3	WASHER 11 x 18 x 1,6 mm ARANDELA	ROSETTA PIANA ANILHA	RONDELLE SLUITRING	SCHEIBE FLADSKIVE	9720

(1) See Figure 07-05

07-02		p1	08/04

BRAKES - HYDRAULIC SYSTEM, WITHOUT TRAILER BRAKES
FRENI - IMPIANTO IDRAULICO, SENZA FRENI DEL RIMORCHIO
FREINS - CIRCUIT HYDRAULIQUE, SANS FREINS DE REMORQUE
BREMSEN - HYDRAULIKANLAGE, OHNE ANHÄNGERBREMSEN

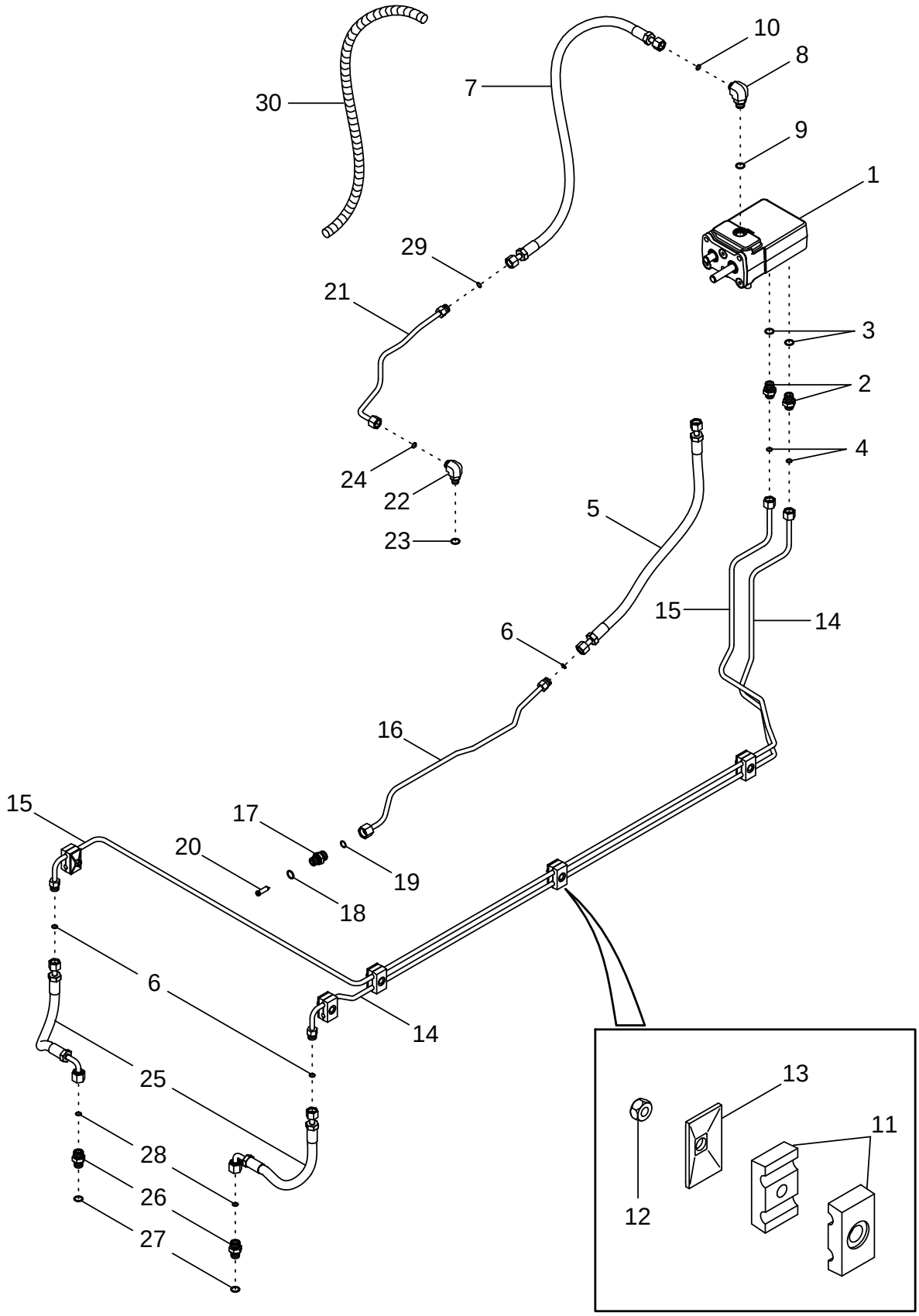

FRENOS - SISTEMA HIDRÁULICO, SIN FRENOS DE REMOLQUE
TRAVÕES - SISTEMA HIDRÁULICO, SEM TRAVÕES DO REBOQUE
REMMEN - HYDRAULISCH SYSTEEM, ZONDER OPLEGGERREMMEN
BREMSER - HYDRAULIKSYSTEM, UDEN ANHÆNGERBREMSER

R	N	P.N.	MOD	Q	Description Denominacion	Descrizione Denominação	Description Beschrijving	Bezeichnung Beskrivelse	L.C.
1	1	87442167		1	VALVE Brake VALVULA	VALVOLA VALVULA	VALVE VALVE	VENTIL VALVE	P468
2		700-106		2	CONNECTOR, HYD. 11/16 fc sl x 18 Or, Inc 3, 4 RACOR	RACCORDO IDRAULICO CONECTOR	RACCORD VERBINDING	STUTZEN FORSKRUNING	020R
3		637-63153		1	O-RING 15,3 ID x 2,2 JUNTA HERMETICA	ANELLO TOROIDALE O-RING	JOINT THORIQUE O-RING	DICHTRING O-RING	055A
4		238-6012		1	O-RING 3/8 ID x 1/16 JUNTA HERMETICA	ANELLO TOROIDALE ANEL O	JOINT TORIQUE O-RING	O-RING O-RING	7176
5		87404717		1	HOSE ASSY. Supply MANGUERA (CONJUNTO	GRUPPO TUBO FLESS MANGUEIRA CONJUNTO	FLEXIBLE (ASSEMBLE) HOSE ASSY.	SCHLAUCH (KPLT.) HOSE ASSY.	P457
6		238-6012		3	O-RING 3/8 ID x 1/16 JUNTA HERMETICA	ANELLO TOROIDALE ANEL O	JOINT TORIQUE O-RING	O-RING O-RING	7176
7		400692A1	a	1	HOSE Return MANGA	MANICOTTO FLESSIBILE TUBO FLEXIVEL	FLEXIBLE FLEXIBELE BUIS	SCHLAUCH SLANGE	030M
7		87432131	b	1	HOSE Return MANGA	MANICOTTO FLESSIBILE TUBO FLEXIVEL	FLEXIBLE FLEXIBELE BUIS	SCHLAUCH SLANGE	030M
8		700-345	a	1	ELBOW 11/16 fc sl x 18 Or, Inc. 9, 10 CODO	GOMITO COTOVELO	COUDE ELBOW	ROHRKNIE ELBOW	P549
8		700-305	b	1	ELBOW 13/16 fc sl x 18 Or, Inc. 9, 10 CODO	GOMITO JOELHO	COUDE ELLEBOOG	KNIESTÜCK VINKELRØR	2940
9		637-63153		1	O-RING 15,3 ID x 2,2 JUNTA HERMETICA	ANELLO TOROIDALE O-RING	JOINT THORIQUE O-RING	DICHTRING O-RING	055A
10		238-6012	a	1	O-RING 3/8 ID x 1/16 JUNTA HERMETICA	ANELLO TOROIDALE ANEL O	JOINT TORIQUE O-RING	O-RING O-RING	7176
10		238-6014	b	1	O-RING 1/2 ID x 1/16 JUNTA HERMETICA	ANELLO TOROIDALE ANEL O	JOINT TORIQUE O-RING	O-RING O-RING	7176
11		1546024C1		5	CLAMP COLLAR	MORSETTO BRACADEIRA	COLLIER CLAMP	SCHELLE CLAMP	1640
12		829-1408		5	NUT M8; 10 TUERCA	DADO PORCA	ECROU MOER	MUTTER MØTRIK	010D
13		384870A1		5	PLATE PLACA	PIASTRA CHAPA	PLAQUE PLAAT	PLATTE PLADE	105P
14		436382A1		1	TUBE ASSY. Right Hand Brake TUBO (CONJUNTO)	TUBO, COMPLESSIVO TUBO CONJUNTO	TUYAUTERIE TUBE ASSY.	ROHRLEITUNG TUBE ASSY.	P465
15		436383A1		1	TUBE ASSY. Left Hand Brake TUBO (CONJUNTO)	TUBO, COMPLESSIVO TUBO CONJUNTO	TUYAUTERIE TUBE ASSY.	ROHRLEITUNG TUBE ASSY.	P465
16		433588A1		1	TUBE ASSY. Supply TUBO (CONJUNTO)	TUBO, COMPLESSIVO TUBO CONJUNTO	TUYAUTERIE TUBE ASSY.	ROHRLEITUNG TUBE ASSY.	P465
17		700-102		1	CONNECTOR, HYD. 13/16 fc sl x 18 Or, Inc. 18 - 20 RACOR	RACCORDO IDRAULICO CONECTOR	RACCORD VERBINDING	STUTZEN FORSKRUNING	020R

(1) See Figure 07-05
(a) BSN AJB0304631
(b) ASN AJB0304631

BRAKES - HYDRAULIC SYSTEM, WITHOUT TRAILER BRAKES
FRENI - IMPIANTO IDRAULICO, SENZA FRENI DEL RIMORCHIO
FREINS - CIRCUIT HYDRAULIQUE, SANS FREINS DE REMORQUE
BREMSEN - HYDRAULIKANLAGE, OHNE ANHÄNGERBREMSEN

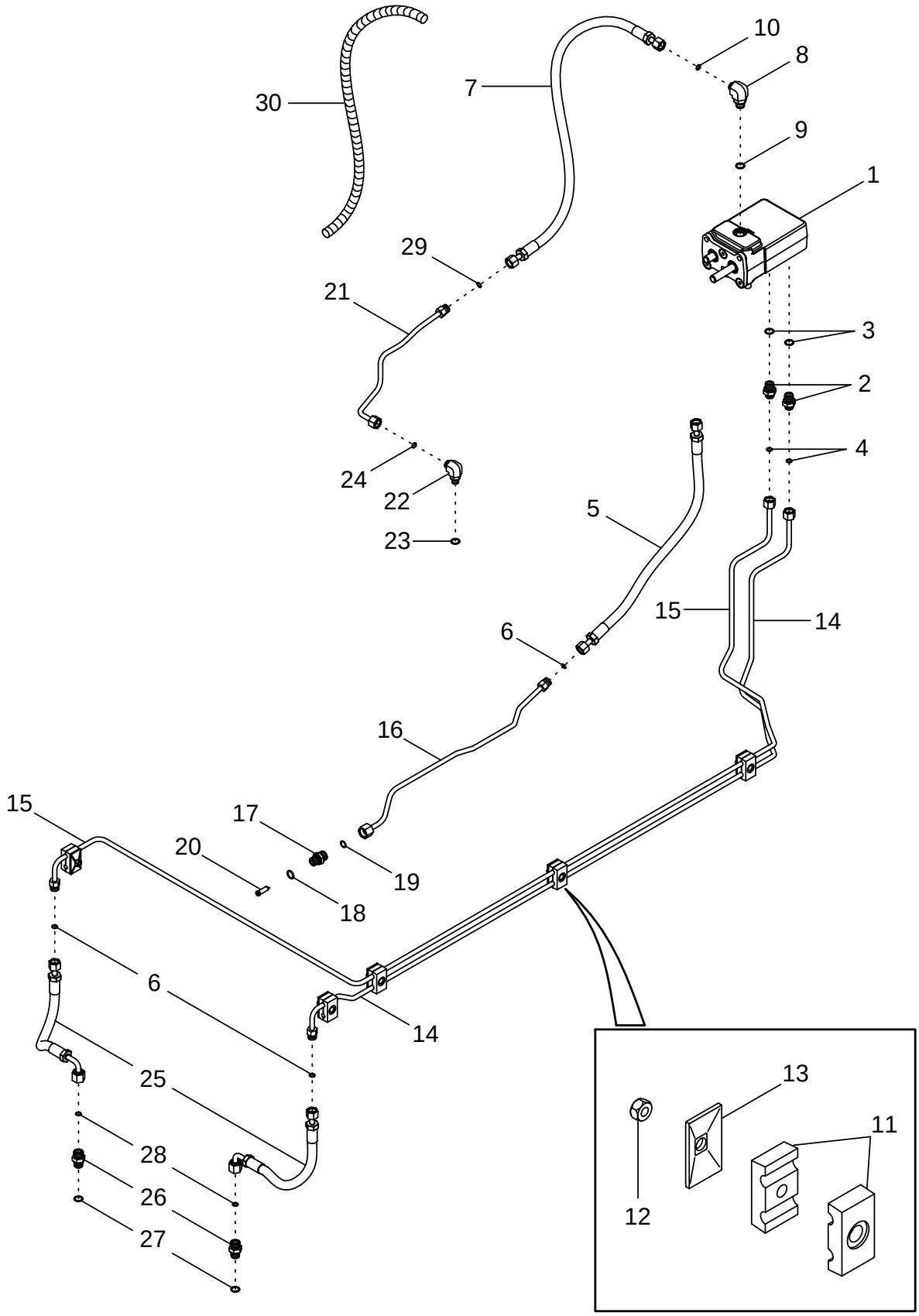

FRENOS - SISTEMA HIDRÁULICO, SIN FRENOS DE REMOLQUE
TRAVÕES - SISTEMA HIDRÁULICO, SEM TRAVÕES DO REBOQUE
REMMEN - HYDRAULISCH SYSTEEM, ZONDER OPLEGGERREMMEN
BREMSER - HYDRAULIKSYSTEM, UDEN ANHÆNGERBREMSER

R	N	P.N.	MOD	Q	Description Denominacion	Descrizione Denominação	Description Beschrijving	Bezeichnung Beskrivelse	L.C.
18		637-63153		1	O-RING 15,3 ID x 2,2 JUNTA HERMETICA	ANELLO TOROIDALE O-RING	JOINT THORIQUE O-RING	DICHTRING O-RING	055A
19		238-6014		1	O-RING 1/2 ID x 1/16 JUNTA HERMETICA	ANELLO TOROIDALE ANEL O	JOINT TORIQUE O-RING	O-RING O-RING	7176
20		326965A1		1	SCREEN CERNIDOR (CONJUNTO	VAGLIO TELA	TAMIS SCREEN	SIEB SCREEN	P584
21		387024A1	a	1	TUBE ASSY. Return TUBO (CONJUNTO)	TUBO, COMPLESSIVO TUBO CONJUNTO	TUYAUTERIE TUBE ASSY.	ROHRLEITUNG TUBE ASSY.	P465
21		87432130	b	1	TUBE ASSY. Return TUBO (CONJUNTO)	TUBO, COMPLESSIVO TUBO CONJUNTO	TUYAUTERIE TUBE ASSY.	ROHRLEITUNG TUBE ASSY.	P465
21		87440347	c	1	TUBE ASSY. Return TUBO (CONJUNTO)	TUBO, COMPLESSIVO TUBO CONJUNTO	TUYAUTERIE TUBE ASSY.	ROHRLEITUNG TUBE ASSY.	P465
22		201-304	a	1	ELBOW 11/16 fc sl x 9/16 Or, Inc. 23, 24 CODO	GOMITO JOELHO	COUDE ELLEBOOG	KNIESTÜCK VINKELRØR	2940
22		87432129	b	1	ELBOW 13/16 fc sl x 9/16 Or, Inc. 23, 24 CODO	GOMITO JOELHO	COUDE ELLEBOOG	KNIESTÜCK VINKELROER	085G
22		700-305	c	1	ELBOW 13/16 fc sl x 18 Or, Inc. 23, 24 CODO	GOMITO JOELHO	COUDE ELLEBOOG	KNIESTÜCK VINKELRØR	2940
23		237-6006		1	O-RING 15/32 ID x 5/64 JUNTA HERMETICA	ANELLO TOROIDALE O-RING	JOINT THORIQUE O-RING	DICHTRING O-RING	055A
24		238-6012	a	1	O-RING 3/8 ID x 1/16 JUNTA HERMETICA	ANELLO TOROIDALE ANEL O	JOINT TORIQUE O-RING	O-RING O-RING	7176
24		238-6014	d	1	O-RING 1/2 ID x 1/16 JUNTA HERMETICA	ANELLO TOROIDALE ANEL O	JOINT TORIQUE O-RING	O-RING O-RING	7176
25		86985588		2	HOSE, FLEXIBLE MANGA FLEXIBLE	TUBO FLESSIBILE TUBO FLEXIVEL	TUYAU FLEXIBLE FLEXIBELE SLANG	SCHLAUCH, FLEXIBEL FLEKSIBEL SLANGE	192T
26		700-102		2	CONNECTOR, HYD. 13/16 fc sl x 18 Or, Inc. 27, 28 RACOR	RACCORDO IDRAULICO CONECTOR	RACCORD VERBINDING	STUTZEN FORSKRUNING	020R
27		637-63153		1	O-RING 15,3 ID x 2,2 JUNTA HERMETICA	ANELLO TOROIDALE O-RING	JOINT THORIQUE O-RING	DICHTRING O-RING	055A
28		238-6014		1	O-RING 1/2 ID x 1/16 JUNTA HERMETICA	ANELLO TOROIDALE ANEL O	JOINT TORIQUE O-RING	O-RING O-RING	7176
29		238-6012	a	1	O-RING 3/8 ID x 1/16 JUNTA HERMETICA	ANELLO TOROIDALE ANEL O	JOINT TORIQUE O-RING	O-RING O-RING	7176
29		238-6014	d	1	O-RING 1/2 ID x 1/16 JUNTA HERMETICA	ANELLO TOROIDALE ANEL O	JOINT TORIQUE O-RING	O-RING O-RING	7176
30	1	384834A1		1	LINE Conduit TUBERIA	CONDOTTO LINHA	CONDUITE LINE	LEITUNG LINE	P258

(1) With Fuel Separator Filter
(a) BSN AJB0304631
(b) BTW AJB0304631 & AJB0355338
(c) ASN AJB0355338
(d) ASN AJB0304631

BRAKES - HYDRAULIC SYSTEM, WITH HYDRAULIC TRAILER BRAKES
FRENI - IMPIANTO IDRAULICO, CON FRENI IDRAULICI DEL RIMORCHIO
FREINS - CIRCUIT HYDRAULIQUE, À FREINS DE REMORQUE HYDRAULIQUES
BREMSEN - HYDRAULIKANLAGE, MIT HYDRAULISCHEN ANHÄNGERBREMSEN

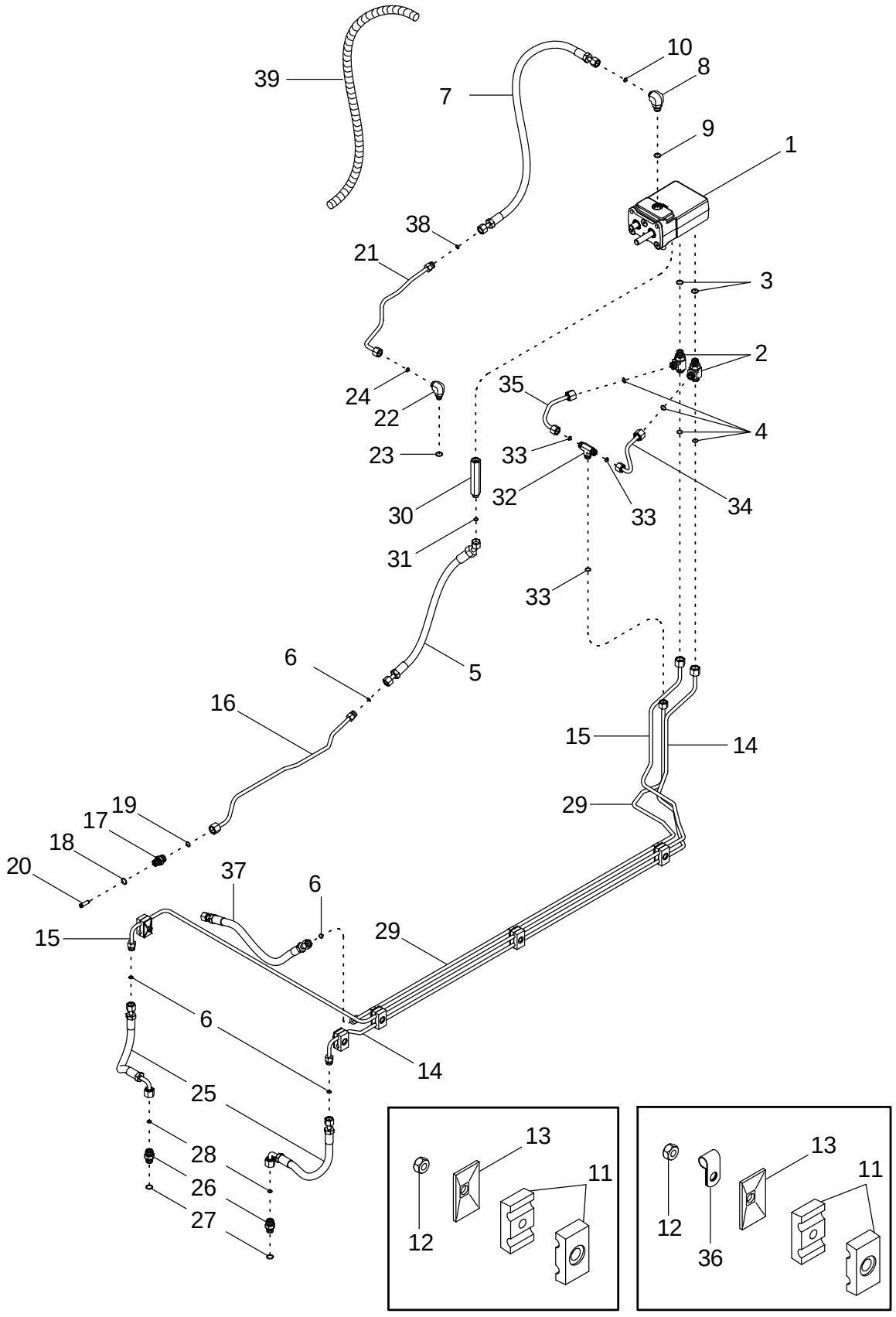

FRENOS - SISTEMA HIDRÁULICO, CON FRENOS HIDRÁULICOS DE REMOLQUE
TRAVÕES - SISTEMA HIDRÁULICO, COM TRAVÕES DO REBOQUE HIDRÁULICO
REMMEN - HYDRAULISCH SYSTEEM, MET HYDRAULISCHE OPLEGGERREMMEN
BREMSER - HYDRAULIKSYSTEM, MED HYDRAULISKE ANHÆNGERBREMSER

R	N	P.N.	MOD	Q	Description Denominacion	Descrizione Denominação	Description Beschrijving	Bezeichnung Beskrivelse	L.C.
1	1	87442167		1	VALVE Brake VALVULA	VALVOLA VALVULA	VALVE VALVE	VENTIL VALVE	P468
2		700-412		2	TEE 13/16 fc sl x 18 Or, Inc. 3, 4 RACOR-T	PEZZO A T TE	TE TEE	T-STÜCK T-STYKKE	9020
3		637-63153		1	O-RING 15,3 ID x 2,2 JUNTA HERMETICA	ANELLO TOROIDALE O-RING	JOINT THORIQUE O-RING	DICHTRING O-RING	055A
4		238-6014		2	O-RING 1/2 ID x 1/16 JUNTA HERMETICA	ANELLO TOROIDALE ANEL O	JOINT TORIQUE O-RING	O-RING O-RING	7176
5		87423387		1	HOSE ASSY. Supply MANGUERA (CONJUNTO	GRUPPO TUBO FLESS MANGUEIRA CONJUNTO	FLEXIBLE (ASSEMBLE) HOSE ASSY.	SCHLAUCH (KPLT.) HOSE ASSY.	P457
6		238-6012		3	O-RING 3/8 ID x 1/16 JUNTA HERMETICA	ANELLO TOROIDALE ANEL O	JOINT TORIQUE O-RING	O-RING O-RING	7176
7		400692A1		1	HOSE Return MANGA	MANICOTTO FLESSIBILE TUBO FLEXIVEL	FLEXIBLE FLEXIBELE BUIS	SCHLAUCH SLANGE	030M
7		400692A1	a	1	HOSE Return MANGA	MANICOTTO FLESSIBILE TUBO FLEXIVEL	FLEXIBLE FLEXIBELE BUIS	SCHLAUCH SLANGE	030M
7		87432131	b	1	HOSE Return MANGA	MANICOTTO FLESSIBILE TUBO FLEXIVEL	FLEXIBLE FLEXIBELE BUIS	SCHLAUCH SLANGE	030M
8		700-345	a	1	ELBOW 11/16 fc sl x 18 Or, Inc. 9, 10 CODO	GOMITO COTOVELO	COUDE ELBOW	ROHRKNIE ELBOW	P549
8		700-305	b	1	ELBOW 13/16 fc sl x 18 Or, Inc. 9, 10 CODO	GOMITO JOELHO	COUDE ELLEBOOG	KNIESTÜCK VINKELRØR	2940
9		637-63153		1	O-RING 15,3 ID x 2,2 JUNTA HERMETICA	ANELLO TOROIDALE O-RING	JOINT THORIQUE O-RING	DICHTRING O-RING	055A
10		238-6012	a	1	O-RING 3/8 ID x 1/16 JUNTA HERMETICA	ANELLO TOROIDALE ANEL O	JOINT TORIQUE O-RING	O-RING O-RING	7176
10		238-6014	b	1	O-RING 1/2 ID x 1/16 JUNTA HERMETICA	ANELLO TOROIDALE ANEL O	JOINT TORIQUE O-RING	O-RING O-RING	7176
11		1546024C1		5	CLAMP COLLAR	MORSETTO BRACADEIRA	COLLIER CLAMP	SCHELLE CLAMP	1640
12		829-1408		5	NUT M8; 10 TUERCA	DADO PORCA	ECROU MOER	MUTTER MØTRIK	010D
13		384870A1		5	PLATE PLACA	PIASTRA CHAPA	PLAQUE PLAAT	PLATTE PLADE	105P
14		86992766		1	TUBE ASSY. Right Hand Brake TUBO (CONJUNTO)	TUBO, COMPLESSIVO TUBO CONJUNTO	TUYAUTERIE TUBE ASSY.	ROHRLEITUNG TUBE ASSY.	P465
15		86992767		1	TUBE ASSY. Left Hand Brake TUBO (CONJUNTO)	TUBO, COMPLESSIVO TUBO CONJUNTO	TUYAUTERIE TUBE ASSY.	ROHRLEITUNG TUBE ASSY.	P465
16		433588A1		1	TUBE ASSY. Supply TUBO (CONJUNTO)	TUBO, COMPLESSIVO TUBO CONJUNTO	TUYAUTERIE TUBE ASSY.	ROHRLEITUNG TUBE ASSY.	P465

(1) See Figure 07-05
(a) BSN AJB0304631
(b) ASN AJB0304631

07-03		p2	08/04

BRAKES - HYDRAULIC SYSTEM, WITH HYDRAULIC TRAILER BRAKES
FRENI - IMPIANTO IDRAULICO, CON FRENI IDRAULICI DEL RIMORCHIO
FREINS - CIRCUIT HYDRAULIQUE, À FREINS DE REMORQUE HYDRAULIQUES
BREMSEN - HYDRAULIKANLAGE, MIT HYDRAULISCHEN ANHÄNGERBREMSEN

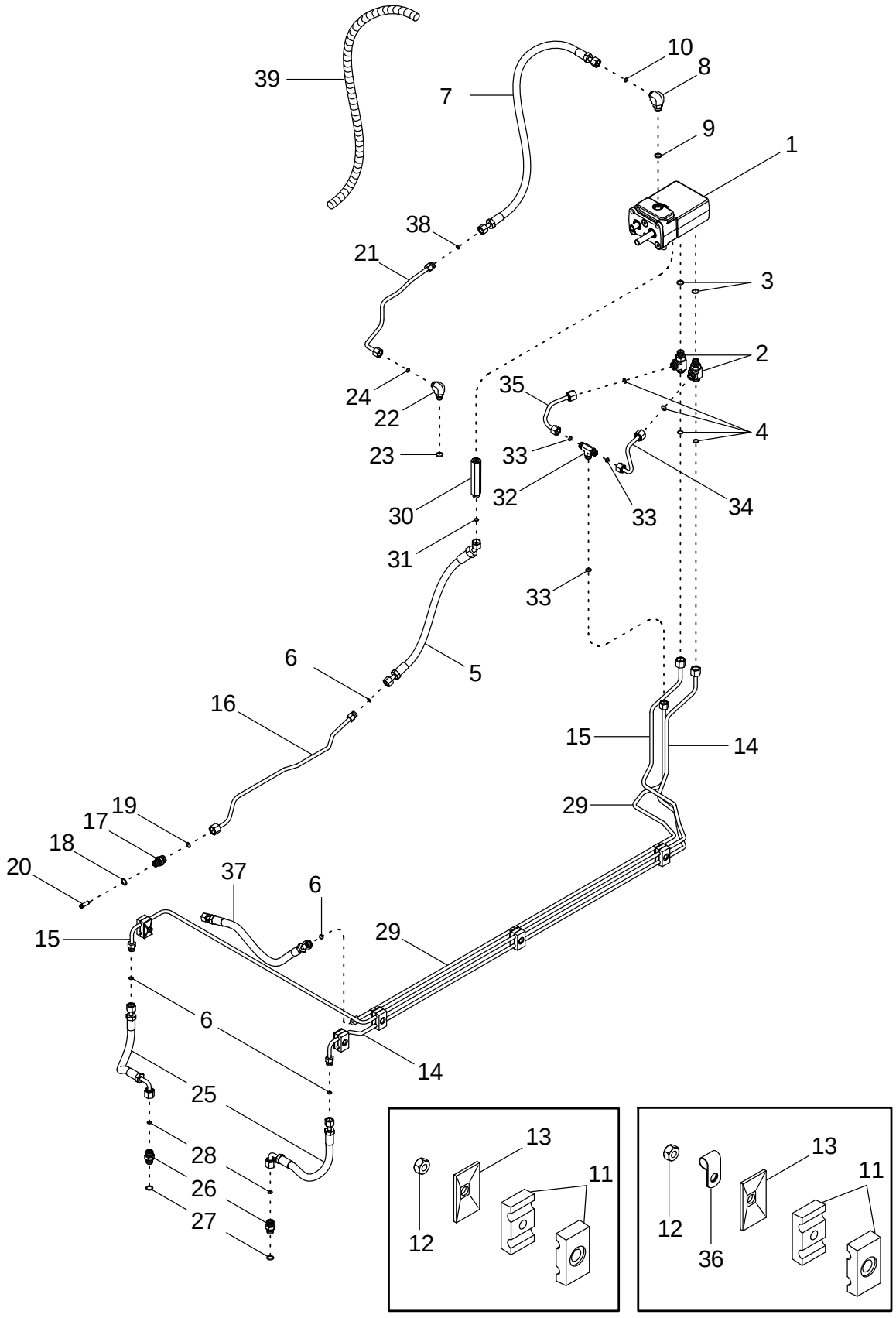

FRENOS - SISTEMA HIDRÁULICO, CON FRENOS HIDRÁULICOS DE REMOLQUE
TRAVÕES - SISTEMA HIDRÁULICO, COM TRAVÕES DO REBOQUE HIDRÁULICO
REMMEN - HYDRAULISCH SYSTEEM, MET HYDRAULISCHE OPLEGGERREMMEN
BREMSER - HYDRAULIKSYSTEM, MED HYDRAULISKE ANHÆNGERBREMSER

R	N	P.N.	MOD	Q	Description Denominacion	Descrizione Denominação	Description Beschrijving	Bezeichnung Beskrivelse	L.C.
17		316443A2		1	FITTING 13/16 fc sl x 18 Or, Inc. 18 - 20				
						RACCORDO	RACCORD	ANSCHLUSSSTÜCK	3300
					CONEXION	CONEXAO	FITTING	FITTING	
18		637-63153		1	O-RING 15,3 ID x 2,2	ANELLO TOROIDALE	JOINT THORIQUE	DICHTRING	055A
					JUNTA HERMETICA	O-RING	O-RING	O-RING	
19		238-6014		1	O-RING 1/2 ID x 1/16	ANELLO TOROIDALE	JOINT TORIQUE	O-RING	7176
					JUNTA HERMETICA	ANEL O	O-RING	O-RING	
20		326965A1		1	SCREEN	VAGLIO	TAMIS	SIEB	P584
					CERNIDOR (CONJUNTO	TELA	SCREEN	SCREEN	
21		387024A1	a	1	TUBE ASSY. Return	TUBO, COMPLESSIVO	TUYAUTERIE	ROHRLEITUNG	P465
					TUBO (CONJUNTO)	TUBO CONJUNTO	TUBE ASSY.	TUBE ASSY.	
21		87432130	b	1	TUBE ASSY. Return	TUBO, COMPLESSIVO	TUYAUTERIE	ROHRLEITUNG	P465
					TUBO (CONJUNTO)	TUBO CONJUNTO	TUBE ASSY.	TUBE ASSY.	
21		87440347	c	1	TUBE ASSY. Return	TUBO, COMPLESSIVO	TUYAUTERIE	ROHRLEITUNG	P465
					TUBO (CONJUNTO)	TUBO CONJUNTO	TUBE ASSY.	TUBE ASSY.	
22		201-304	a	1	ELBOW 11/16 fc sl x 9/16 Or, Inc. 23, 24				
						GOMITO	COUDE	KNIESTÜCK	2940
					CODO	JOELHO	ELLEBOOG	VINKELRØR	
22		87432129	b	1	ELBOW 13/16 fc sl x 9/16 Or, Inc. 23, 24				
						GOMITO	COUDE	KNIESTÜCK	085G
					CODO	JOELHO	ELLEBOOG	VINKELROER	
22		700-305	c	1	ELBOW 13/16 fc sl x 18 Or, Inc. 23, 24				
						GOMITO	COUDE	KNIESTÜCK	2940
					CODO	JOELHO	ELLEBOOG	VINKELRØR	
23		237-6006		1	O-RING 15/32 ID x 5/64	ANELLO TOROIDALE	JOINT THORIQUE	DICHTRING	055A
					JUNTA HERMETICA	O-RING	O-RING	O-RING	
24		238-6012	a	1	O-RING 3/8 ID x 1/16	ANELLO TOROIDALE	JOINT TORIQUE	O-RING	7176
					JUNTA HERMETICA	ANEL O	O-RING	O-RING	
24		238-6014	d	1	O-RING 1/2 ID x 1/16	ANELLO TOROIDALE	JOINT TORIQUE	O-RING	7176
					JUNTA HERMETICA	ANEL O	O-RING	O-RING	
25		86985588		2	HOSE, FLEXIBLE	TUBO FLESSIBILE	TUYAU FLEXIBLE	SCHLAUCH, FLEXIBEL	192T
					MANGA FLEXIBLE	TUBO FLEXIVEL	FLEXIBELE SLANG	FLEKSIBEL SLANGE	
26		700-102		2	CONNECTOR, HYD. 13/16 fc sl x 18 Or, Inc. 26, 27				
						RACCORDO IDRAULICO	RACCORD	STUTZEN	020R
					RACOR	CONECTOR	VERBINDING	FORSKRUNING	
27		637-63153		1	O-RING 15,3 ID x 2,2	ANELLO TOROIDALE	JOINT THORIQUE	DICHTRING	055A
					JUNTA HERMETICA	O-RING	O-RING	O-RING	
28		238-6014		1	O-RING 1/2 ID x 1/16	ANELLO TOROIDALE	JOINT TORIQUE	O-RING	7176
					JUNTA HERMETICA	ANEL O	O-RING	O-RING	
29		87404777		1	TUBE ASSY.	TUBO, COMPLESSIVO	TUYAUTERIE	ROHRLEITUNG	P465
					TUBO (CONJUNTO)	TUBO CONJUNTO	TUBE ASSY.	TUBE ASSY.	
30		86988933		1	CONNECTOR, HYD. Inc. 3	RACCORDO IDRAULICO	RACCORD	STUTZEN	020R
					RACOR	CONECTOR	VERBINDING	FORSKRUNING	
31		238-6012		1	O-RING 3/8 ID x 1/16	ANELLO TOROIDALE	JOINT TORIQUE	O-RING	7176
					JUNTA HERMETICA	ANEL O	O-RING	O-RING	

(a) BSN AJB0304631
(b) BTW AJB0304631 & AJB0355338
(c) ASN AJB0355338
(d) ASN AJB0304631

BRAKES - HYDRAULIC SYSTEM, WITH HYDRAULIC TRAILER BRAKES
FRENI - IMPIANTO IDRAULICO, CON FRENI IDRAULICI DEL RIMORCHIO
FREINS - CIRCUIT HYDRAULIQUE, À FREINS DE REMORQUE HYDRAULIQUES
BREMSEN - HYDRAULIKANLAGE, MIT HYDRAULISCHEN ANHÄNGERBREMSEN

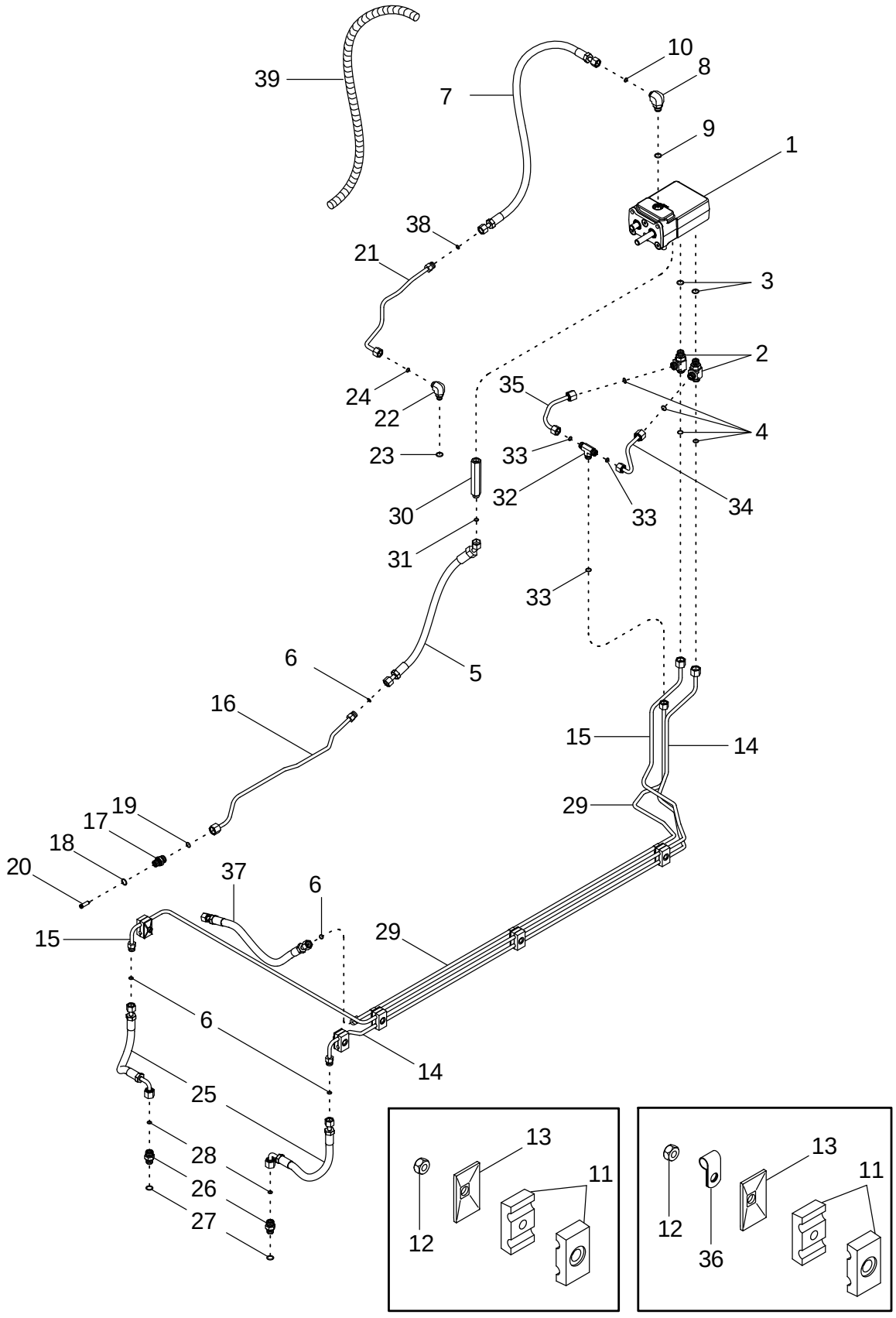

FRENOS - SISTEMA HIDRÁULICO, CON FRENOS HIDRÁULICOS DE REMOLQUE
TRAVÕES - SISTEMA HIDRÁULICO, COM TRAVÕES DO REBOQUE HIDRÁULICO
REMMEN - HYDRAULISCH SYSTEEM, MET HYDRAULISCHE OPLEGGERREMMEN
BREMSER - HYDRAULIKSYSTEM, MED HYDRAULISKE ANHÆNGERBREMSER

R	N	P.N.	MOD	Q	Description Denominacion	Descrizione Denominação	Description Beschrijving	Bezeichnung Beskrivelse	L.C.
32		86991302		1	VALVE, HYDRAULIC Inc. 33 VALVULA HIDRAULICA	VALVOLA IDRAULICA VALVULA HIDRAULICA	SOUPAPE HYDRAULIQU KLEP, HYDRAULISCH	VENTIL, HYDRAULISCH VENTIL HYDRAULIK	010V
33		238-6012		3	O-RING 3/8 ID x 1/16 JUNTA HERMETICA	ANELLO TOROIDALE ANEL O	JOINT TORIQUE O-RING	O-RING O-RING	7176
34		86992682		1	TUBE ASSY. Right Hand TUBO (CONJUNTO)	TUBO, COMPLESSIVO TUBO CONJUNTO	TUYAUTERIE TUBE ASSY.	ROHRLEITUNG TUBE ASSY.	P465
35		86992681		1	TUBE ASSY. Left Hand TUBO (CONJUNTO)	TUBO, COMPLESSIVO TUBO CONJUNTO	TUYAUTERIE TUBE ASSY.	ROHRLEITUNG TUBE ASSY.	P465
36		515-2295		3	CLAMP 3/8 ID COLLAR	MORSETTO BRACADEIRA	COLLIER CLAMP	SCHELLE CLAMP	1640
37		86985589		1	HOSE ASSY. MANGUERA (CONJUNTO	GRUPPO TUBO FLESS MANGUEIRA CONJUNTO	FLEXIBLE (ASSEMBLE) HOSE ASSY.	SCHLAUCH (KPLT.) HOSE ASSY.	P457
38		238-6012	a	1	O-RING 3/8 ID x 1/16 JUNTA HERMETICA	ANELLO TOROIDALE ANEL O	JOINT TORIQUE O-RING	O-RING O-RING	7176
38		238-6014	b	1	O-RING 1/2 ID x 1/16 JUNTA HERMETICA	ANELLO TOROIDALE ANEL O	JOINT TORIQUE O-RING	O-RING O-RING	7176
39	1	384834A1		1	LINE Conduit TUBERIA	CONDOTTO LINHA	CONDUITE LINE	LEITUNG LINE	P258

(1) With Fuel Separator Filter
(a) BSN AJB0304631
(b) ASN AJB0304631

07-04		p1	08/04

BRAKES - HYDRAULIC SYSTEM, WITH PNEUMATIC TRAILER BRAKES
FRENI - IMPIANTO IDRAULICO, CON FRENI PNEUMATICI DEL RIMORCHIO
FREINS - CIRCUIT HYDRAULIQUE, À FREINS DE REMORQUE PNEUMATIQUES
BREMSEN - HYDRAULIKANLAGE, MIT PNEUMATISCHEN ANHÄNGERBREMSEN

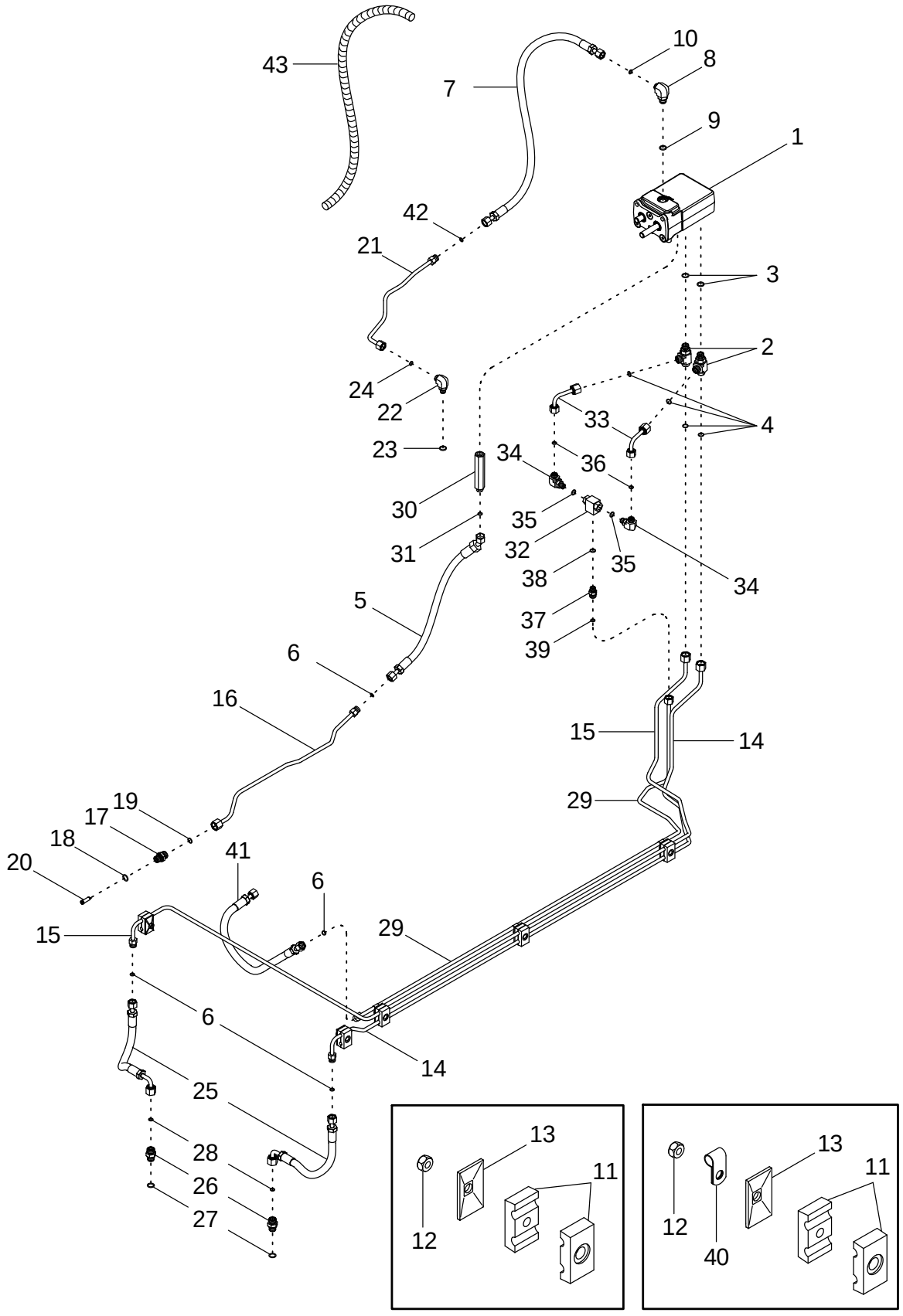

FRENOS - SISTEMA HIDRÁULICO, CON FRENOS NEUMÁTICOS DE REMOLQUE
TRAVÕES - SISTEMA HIDRÁULICO, COM TRAVÕES DO REBOQUE PNEUMÁTICO
REMMEN - HYDRAULISCH SYSTEEM, MET PNEUMATISCHE OPLEGGERREMMEN
BREMSER - HYDRAULIKSYSTEM, MED TRYKLUFTSBREMSER PÅ ANHÆNGER

R	N	P.N.	MOD	Q	Description Denominacion	Descrizione Denominação	Description Beschrijving	Bezeichnung Beskrivelse	L.C.
1	1	87442167		1	VALVE Brake VALVULA	VALVOLA VALVULA	VALVE VALVE	VENTIL VALVE	P468
2		700-412		2	TEE 13/16 fc sl x 18 Or, Inc. 3, 4 RACOR-T	PEZZO A T TE	TE TEE	T-STÜCK T-STYKKE	9020
3		637-63153		1	O-RING 15,3 ID x 2,2 JUNTA HERMETICA	ANELLO TOROIDALE O-RING	JOINT THORIQUE O-RING	DICHTRING O-RING	055A
4		238-6014		2	O-RING 1/2 ID x 1/16 JUNTA HERMETICA	ANELLO TOROIDALE ANEL O	JOINT TORIQUE O-RING	O-RING O-RING	7176
5		87423387		1	HOSE ASSY. Supply MANGUERA (CONJUNTO	GRUPPO TUBO FLESS MANGUEIRA CONJUNTO	FLEXIBLE (ASSEMBLE) HOSE ASSY.	SCHLAUCH (KPLT.) HOSE ASSY.	P457
6		238-6012		3	O-RING 3/8 ID x 1/16 JUNTA HERMETICA	ANELLO TOROIDALE ANEL O	JOINT TORIQUE O-RING	O-RING O-RING	7176
7		400692A1		1	HOSE Return MANGA	MANICOTTO FLESSIBILE TUBO FLEXIVEL	FLEXIBLE FLEXIBELE BUIS	SCHLAUCH SLANGE	030M
7		400692A1	a	1	HOSE Return MANGA	MANICOTTO FLESSIBILE TUBO FLEXIVEL	FLEXIBLE FLEXIBELE BUIS	SCHLAUCH SLANGE	030M
8		700-345	a	1	ELBOW 11/16 fc sl x 18 Or, Inc. 9, 10 CODO	GOMITO COTOVELO	COUDE ELBOW	ROHRKNIE ELBOW	P549
8		700-305	b	1	ELBOW 13/16 fc sl x 18 Or, Inc. 9, 10 CODO	GOMITO JOELHO	COUDE ELLEBOOG	KNIESTÜCK VINKELRØR	2940
9		637-63153		1	O-RING 15,3 ID x 2,2 JUNTA HERMETICA	ANELLO TOROIDALE O-RING	JOINT THORIQUE O-RING	DICHTRING O-RING	055A
10		238-6012	a	1	O-RING 3/8 ID x 1/16 JUNTA HERMETICA	ANELLO TOROIDALE ANEL O	JOINT TORIQUE O-RING	O-RING O-RING	7176
10		238-6014	b	1	O-RING 1/2 ID x 1/16 JUNTA HERMETICA	ANELLO TOROIDALE ANEL O	JOINT TORIQUE O-RING	O-RING O-RING	7176
11		1546024C1		5	CLAMP COLLAR	MORSETTO BRACADEIRA	COLLIER CLAMP	SCHELLE CLAMP	1640
12		829-1408		5	NUT M8; 10 TUERCA	DADO PORCA	ECROU MOER	MUTTER MØTRIK	010D
13		384870A1		5	PLATE PLACA	PIASTRA CHAPA	PLAQUE PLAAT	PLATTE PLADE	105P
14		86992766		1	TUBE ASSY. Right Hand Brake TUBO (CONJUNTO)	TUBO, COMPLESSIVO TUBO CONJUNTO	TUYAUTERIE TUBE ASSY.	ROHRLEITUNG TUBE ASSY.	P465
15		86992767		1	TUBE ASSY. Left Hand Brake TUBO (CONJUNTO)	TUBO, COMPLESSIVO TUBO CONJUNTO	TUYAUTERIE TUBE ASSY.	ROHRLEITUNG TUBE ASSY.	P465
16		433588A1		1	TUBE ASSY. Supply TUBO (CONJUNTO)	TUBO, COMPLESSIVO TUBO CONJUNTO	TUYAUTERIE TUBE ASSY.	ROHRLEITUNG TUBE ASSY.	P465
17		316443A2		1	FITTING 13/16 fc sl x 18 Or, Inc. 18 - 20 CONEXION	RACCORDO CONEXAO	RACCORD FITTING	ANSCHLUSSSTÜCK FITTING	3300

(1) See Figure 07-05
(a) BSN AJB0304631
(b) ASN AJB0304631

07-04		p2	08/04

BRAKES - HYDRAULIC SYSTEM, WITH PNEUMATIC TRAILER BRAKES
FRENI - IMPIANTO IDRAULICO, CON FRENI PNEUMATICI DEL RIMORCHIO
FREINS - CIRCUIT HYDRAULIQUE, À FREINS DE REMORQUE PNEUMATIQUES
BREMSEN - HYDRAULIKANLAGE, MIT PNEUMATISCHEN ANHÄNGERBREMSEN

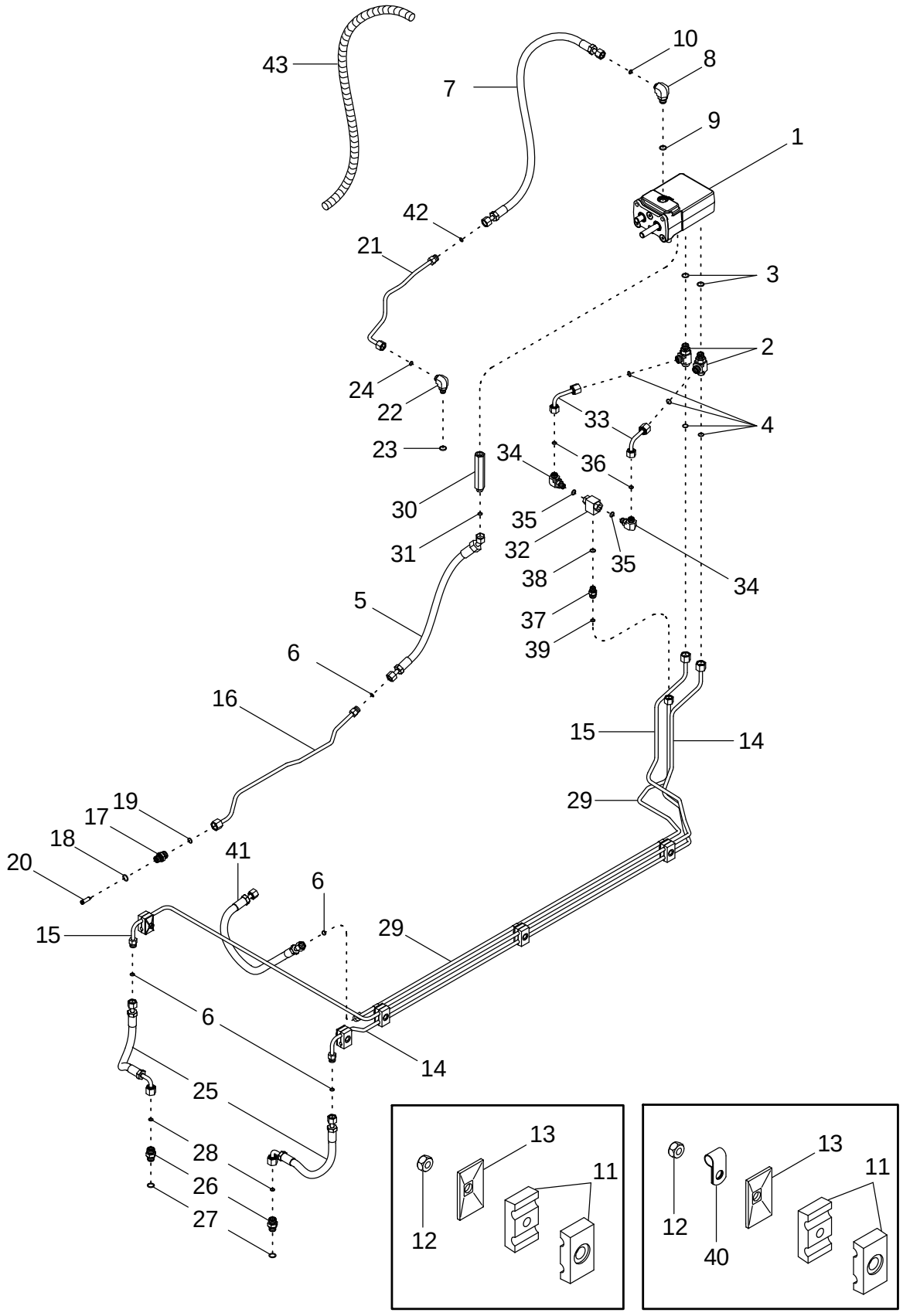

FRENOS - SISTEMA HIDRÁULICO, CON FRENOS NEUMÁTICOS DE REMOLQUE
TRAVÕES - SISTEMA HIDRÁULICO, COM TRAVÕES DO REBOQUE PNEUMÁTICO
REMMEN - HYDRAULISCH SYSTEEM, MET PNEUMATISCHE OPLEGGERREMMEN
BREMSER - HYDRAULIKSYSTEM, MED TRYKLUFTSBREMSER PÅ ANHÆNGER

R	N	P.N.	MOD	Q	Description Denominacion	Descrizione Denominação	Description Beschrijving	Bezeichnung Beskrivelse	L.C.
18		637-63153		1	O-RING 15,3 ID x 2,2 JUNTA HERMETICA	ANELLO TOROIDALE O-RING	JOINT THORIQUE O-RING	DICHTRING O-RING	055A
19		238-6014		1	O-RING 1/2 ID x 1/16 JUNTA HERMETICA	ANELLO TOROIDALE ANEL O	JOINT TORIQUE O-RING	O-RING O-RING	7176
20		326965A1		1	SCREEN CERNIDOR (CONJUNTO	VAGLIO TELA	TAMIS SCREEN	SIEB SCREEN	P584
21		387024A1	a	1	TUBE ASSY. Return TUBO (CONJUNTO)	TUBO, COMPLESSIVO TUBO CONJUNTO	TUYAUTERIE TUBE ASSY.	ROHRLEITUNG TUBE ASSY.	P465
21		87432130	b	1	TUBE ASSY. Return TUBO (CONJUNTO)	TUBO, COMPLESSIVO TUBO CONJUNTO	TUYAUTERIE TUBE ASSY.	ROHRLEITUNG TUBE ASSY.	P465
21		87440347	c	1	TUBE ASSY. Return TUBO (CONJUNTO)	TUBO, COMPLESSIVO TUBO CONJUNTO	TUYAUTERIE TUBE ASSY.	ROHRLEITUNG TUBE ASSY.	P465
22		201-304	a	1	ELBOW 11/16 fc sl x 9/16 Or, Inc. 23, 24 CODO	GOMITO JOELHO	COUDE ELLEBOOG	KNIESTÜCK VINKELRØR	2940
22		87432129	b	1	ELBOW 13/16 fc sl x 9/16 Or, Inc. 23, 24 CODO	GOMITO JOELHO	COUDE ELLEBOOG	KNIESTÜCK VINKELROER	085G
22		700-305	c	1	ELBOW 13/16 fc sl x 18 Or, Inc. 23, 24 CODO	GOMITO JOELHO	COUDE ELLEBOOG	KNIESTÜCK VINKELRØR	2940
23		237-6006		1	O-RING 15/32 ID x 5/64 JUNTA HERMETICA	ANELLO TOROIDALE O-RING	JOINT THORIQUE O-RING	DICHTRING O-RING	055A
24		238-6012	a	1	O-RING 3/8 ID x 1/16 JUNTA HERMETICA	ANELLO TOROIDALE ANEL O	JOINT TORIQUE O-RING	O-RING O-RING	7176
24		238-6014	d	1	O-RING 1/2 ID x 1/16 JUNTA HERMETICA	ANELLO TOROIDALE ANEL O	JOINT TORIQUE O-RING	O-RING O-RING	7176
25		86985588		2	HOSE, FLEXIBLE MANGA FLEXIBLE	TUBO FLESSIBILE TUBO FLEXIVEL	TUYAU FLEXIBLE FLEXIBELE SLANG	SCHLAUCH, FLEXIBEL FLEKSIBEL SLANGE	192T
26		700-102		2	CONNECTOR, HYD. 13/16 fc sl x 18 Or, Inc. 26, 27 RACOR	RACCORDO IDRAULICO CONECTOR	RACCORD VERBINDING	STUTZEN FORSKRUNING	020R
27		637-63153		1	O-RING 15,3 ID x 2,2 JUNTA HERMETICA	ANELLO TOROIDALE O-RING	JOINT THORIQUE O-RING	DICHTRING O-RING	055A
28		238-6014		1	O-RING 1/2 ID x 1/16 JUNTA HERMETICA	ANELLO TOROIDALE ANEL O	JOINT TORIQUE O-RING	O-RING O-RING	7176
29		87404777		1	TUBE ASSY. TUBO (CONJUNTO)	TUBO, COMPLESSIVO TUBO CONJUNTO	TUYAUTERIE TUBE ASSY.	ROHRLEITUNG TUBE ASSY.	P465
30		86988933		1	CONNECTOR, HYD. Inc. 3 RACOR	RACCORDO IDRAULICO CONECTOR	RACCORD VERBINDING	STUTZEN FORSKRUNING	020R
31		238-6012		1	O-RING 3/8 ID x 1/16 JUNTA HERMETICA	ANELLO TOROIDALE ANEL O	JOINT TORIQUE O-RING	O-RING O-RING	7176
32		176143A1		1	VALVE VALVULA	VALVOLA VALVULA	SOUPAPE VALVE	VENTIL VALVE	9620

(a) BSN AJB0304631
(b) BTW AJB0304631 & AJB0355338
(c) ASN AJB0355338
(d) ASN AJB0304631

BRAKES - HYDRAULIC SYSTEM, WITH PNEUMATIC TRAILER BRAKES
FRENI - IMPIANTO IDRAULICO, CON FRENI PNEUMATICI DEL RIMORCHIO
FREINS - CIRCUIT HYDRAULIQUE, À FREINS DE REMORQUE PNEUMATIQUES
BREMSEN - HYDRAULIKANLAGE, MIT PNEUMATISCHEN ANHÄNGERBREMSEN

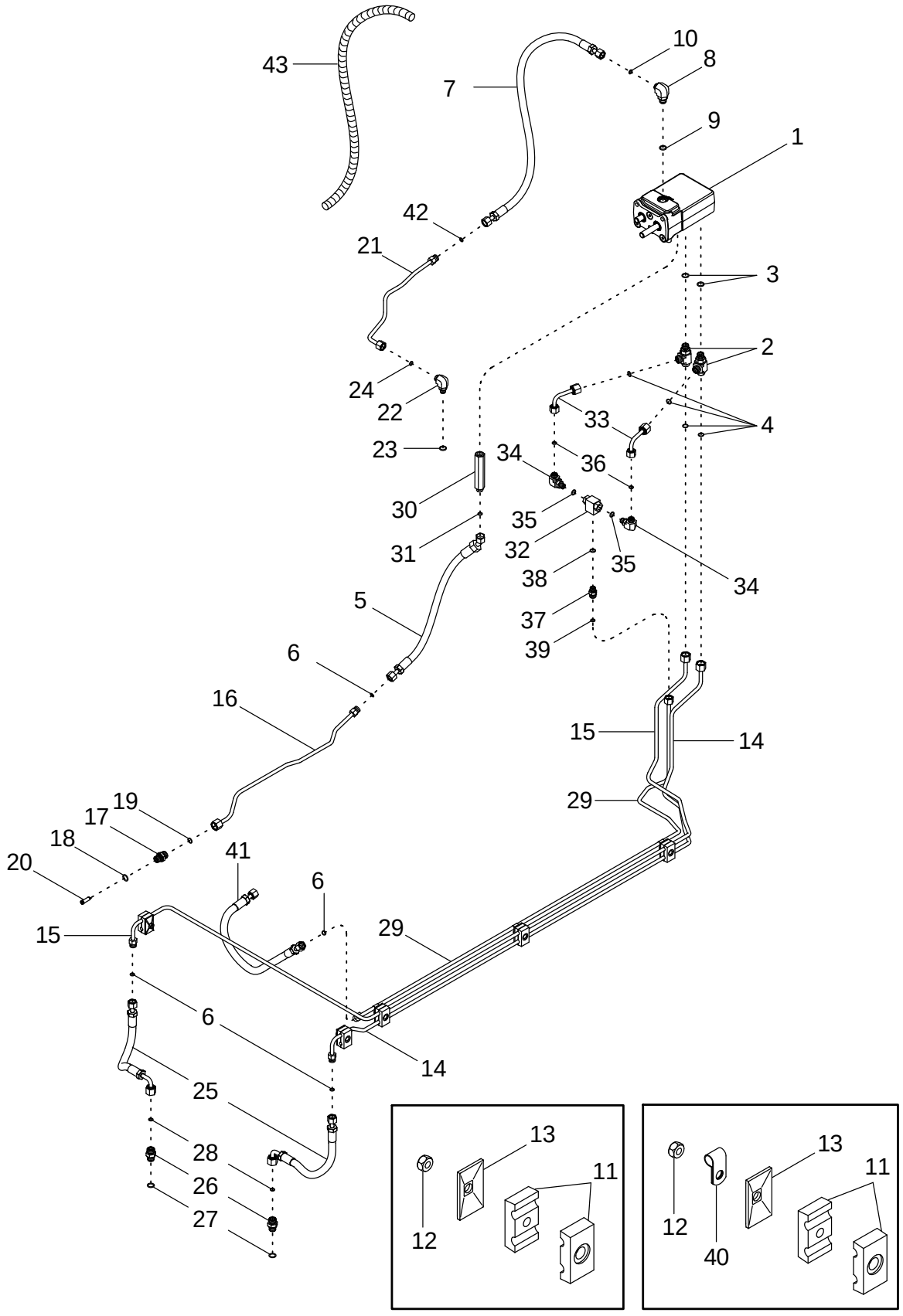

FRENOS - SISTEMA HIDRÁULICO, CON FRENOS NEUMÁTICOS DE REMOLQUE
TRAVÕES - SISTEMA HIDRÁULICO, COM TRAVÕES DO REBOQUE PNEUMÁTICO
REMMEN - HYDRAULISCH SYSTEEM, MET PNEUMATISCHE OPLEGGERREMMEN
BREMSER - HYDRAULIKSYSTEM, MED TRYKLUFTSBREMSER PÅ ANHÆNGER

R	N	P.N.	MOD	Q	Description Denominacion	Descrizione Denominação	Description Beschrijving	Bezeichnung Beskrivelse	L.C.
33		442240A1		2	TUBE ASSY. TUBO (CONJUNTO)	TUBO, COMPLESSIVO TUBO CONJUNTO	TUYAUTERIE TUBE ASSY.	ROHRLEITUNG TUBE ASSY.	P465
34		201-304		2	ELBOW 11/16 fc sl x 9/16 Or, Inc. 35, 36 CODO	GOMITO JOELHO	COUDE ELLEBOOG	KNIESTÜCK VINKELRØR	2940
35		237-6006		1	O-RING 15/32 ID x 5/64 JUNTA HERMETICA	ANELLO TOROIDALE O-RING	JOINT THORIQUE O-RING	DICHTRING O-RING	055A
36		238-6012		1	O-RING 3/8 ID x 1/16 JUNTA HERMETICA	ANELLO TOROIDALE ANEL O	JOINT TORIQUE O-RING	O-RING O-RING	7176
37		201-101		1	CONNECTION 11/16 fc sl x 9/16 Or, Inc. 38, 39 TERMINAL	CONNETTORE CONECTOR	CONNEXION CONNECTION	VERBINDUNG CONNECTION	P154
38		237-6006		1	O-RING 15/32 ID x 5/64 JUNTA HERMETICA	ANELLO TOROIDALE O-RING	JOINT THORIQUE O-RING	DICHTRING O-RING	055A
39		238-6012		1	O-RING 3/8 ID x 1/16 JUNTA HERMETICA	ANELLO TOROIDALE ANEL O	JOINT TORIQUE O-RING	O-RING O-RING	7176
40		515-2295		3	CLAMP 3/8 ID COLLAR	MORSETTO BRACADEIRA	COLLIER CLAMP	SCHELLE CLAMP	1640
41		86985956		1	HOSE MANGA	MANICOTTO FLESSIBILE TUBO FLEXIVEL	FLEXIBLE FLEXIBELE BUIS	SCHLAUCH SLANGE	030M
42		238-6012	a	1	O-RING 3/8 ID x 1/16 JUNTA HERMETICA	ANELLO TOROIDALE ANEL O	JOINT TORIQUE O-RING	O-RING O-RING	7176
42		238-6014	b	1	O-RING 1/2 ID x 1/16 JUNTA HERMETICA	ANELLO TOROIDALE ANEL O	JOINT TORIQUE O-RING	O-RING O-RING	7176
43	1	384834A1		1	LINE Conduit TUBERIA	CONDOTTO LINHA	CONDUITE LINE	LEITUNG LINE	P258

(1) With Fuel Separator Filter
(a) BSN AJB0304631
(b) ASN AJB0304631

BRAKES - CONTROL VALVE
FRENI - VALVOLA DI COMANDO
FREINS - DISTRIBUTEUR DE COMMANDE
BREMSEN - STEUERVENTIL

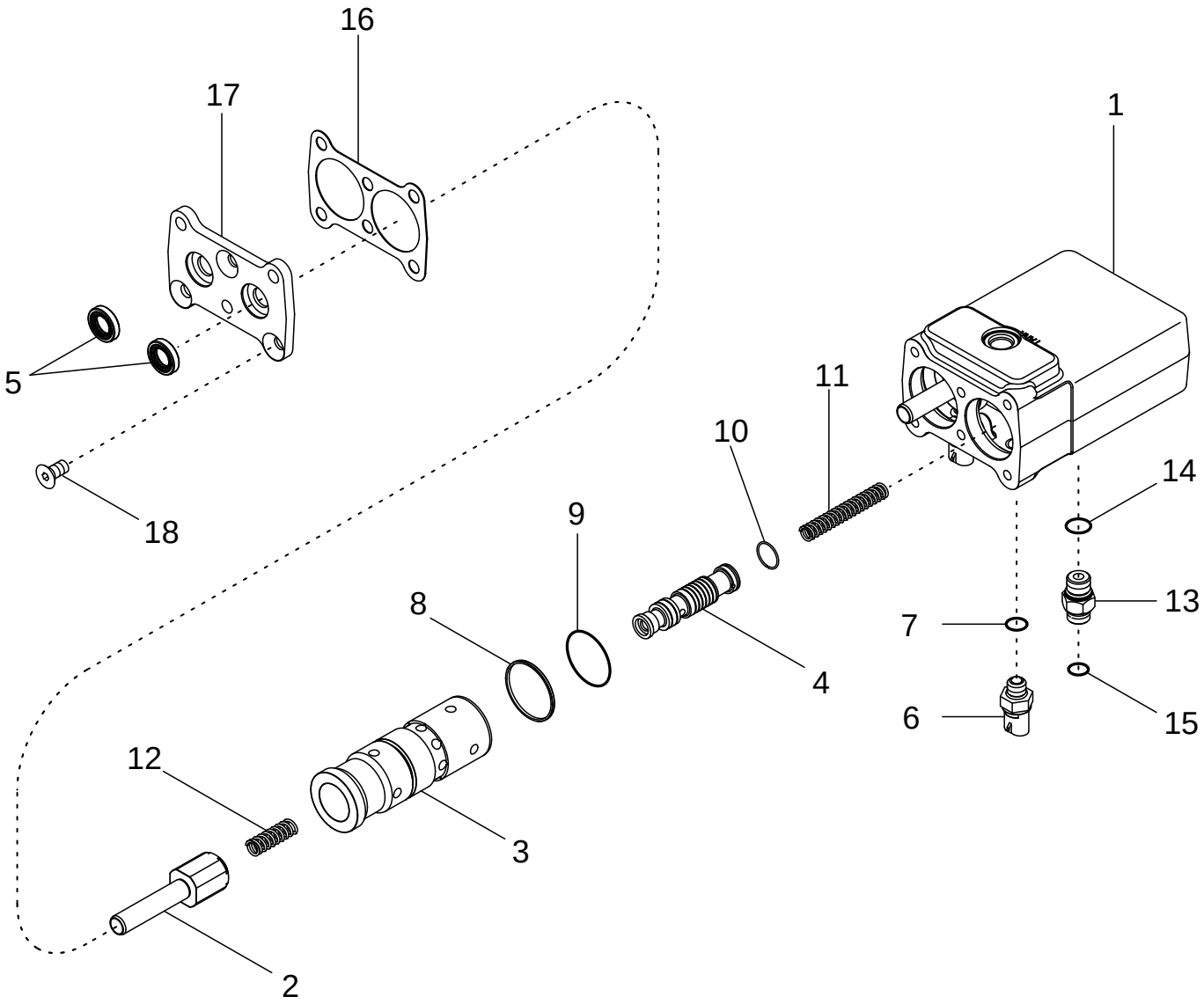

FRENOS - VÁLVULA DE CONTROL
TRAVÕES - VÁLVULA DE CONTROLO
REMMEN - REGELKLEP
BREMSER - STYREVENTIL

R	N	P.N.	MOD	Q	Description Denominacion	Descrizione Denominação	Description Beschrijving	Bezeichnung Beskrivelse	L.C.
		87442167		1	VALVE Inc. 1 - 17 VALVULA	VALVOLA VALVULA	VALVE VALVE	VENTIL VALVE	P468
1		NSS		1	NOT SERVICED SEPARATELY Body NO SE REPARA SEPARA	NON FORNITO SEPARAT NOT SERVICED SEPARA	NON FOURNI SEPAREMI NIET ALLEEN VERKRIJG	KEIN ERSATZTEIL NOT SERVICED SEPARA	064N
2		433199A1		2	POPPET POPPET	VALVOLA A FUNGO POPPET	VALVE A CLAPET POPPET	KEGELVENTIL POPNITTE	012V
3		397105A5		2	SLEEVE MANGUITO	MANICOTTO TUBO	MANCHON SLEEVE	MUFFE TRYKLEJE, KOBLING	031M
4		397106A5		2	SPOOL PISTONCILLO	PISTONCINO CARRETO	TIROIR SPOEL	SPULE SPOLE	134P
5		A63399		2	SEAL ANILLO DE CIERRE	ANELLO DI TENUTA ANEL DE VEDACAO	JOINT DICHTINGSRING	DICHTUNG PAKNINGSRING	132A
6		279266A1		2	SWITCH Inc. 7 CONTACTOR	INTERRUTTORE INTERRUPTOR	CONTACTEUR SCHAKELAAR	SCHALTER KONTAKT	075I
7		237-6003		1	O-RING 5/16 ID x 1/16 JUNTA HERMETICA	ANELLO TOROIDALE ANEL O	JOINT TORIQUE O-RING	O-RING O-RING	7176
8		407387A1		2	SEALRING RETEN	ANELLO, GUARNIZIONE ANEL VEDADOR	JOINT ANNULAIRE SEALRING	LIPPENDICHTING SEALRING	Z125
9		238-7131		2	O-RING 1-11/16 ID x 3/32 JUNTA HERMETICA	ANELLO TOROIDALE O-RING	JOINT THORIQUE O-RING	DICHTRING O-RING	055A
10		407282A1		2	RING, SNAP ANILLO DE RESORTE	ANELLO ELASTICO ANEL	ANNEAU D'ARRÊT RING, SNAP	SICHERUNGSRING LÅSERING	054A
11		397110A1		2	SPRING, COMPRESSION MUELLE COMPRESOR	MOLLA, COMPRESSIONE MOLA DE COMPRESAO	RESSORT DE COMPRES SPRING, COMPRESSION	DRUCKFEDER SPRING, COMPRESSION	Z641
12		433196A2		2	SPRING RESORTE	MOLLA MOLA	RESSORT VEER	FEDER FJEDER	100M
13		87442166		1	POPPET, VALVE Inc. 14 ,15 VÁLVULA DE PASO	VALVOLA A FUNGO VALVULA	CLAPET POPPET, VALVE	VENTILKEGEL DOKVENTIL	P048
14		637-63153		1	O-RING 15,3 ID x 2,2 JUNTA HERMETICA	ANELLO TOROIDALE O-RING	JOINT THORIQUE O-RING	DICHTRING O-RING	055A
15		238-6012		1	O-RING 3/8 ID x 1/16 JUNTA HERMETICA	ANELLO TOROIDALE ANEL O	JOINT TORIQUE O-RING	O-RING O-RING	7176
16		403356A1		1	GASKET JUNTA HERMETICA	GUARNIZIONE JUNTA	JOINT DICHTINGSSTUK	DICHTUNG, FLACH PAKNING	123G
17		397111A1		1	PLATE PLACA	PIASTRA CHAPA	PLAQUE PLAAT	PLATTE PLADE	105P
18		220056A1		3	SCREW TORNILLO	VITE PARAFUSO	VIS SCHROEF	SCHRAUBE SKRUE	040V

BRAKES - DIFFERENTIAL
FRENI - DIFFERENZIALE
FREINS - DIFFERENTIEL
BREMSEN - DIFFERENTIALGETRIEBE

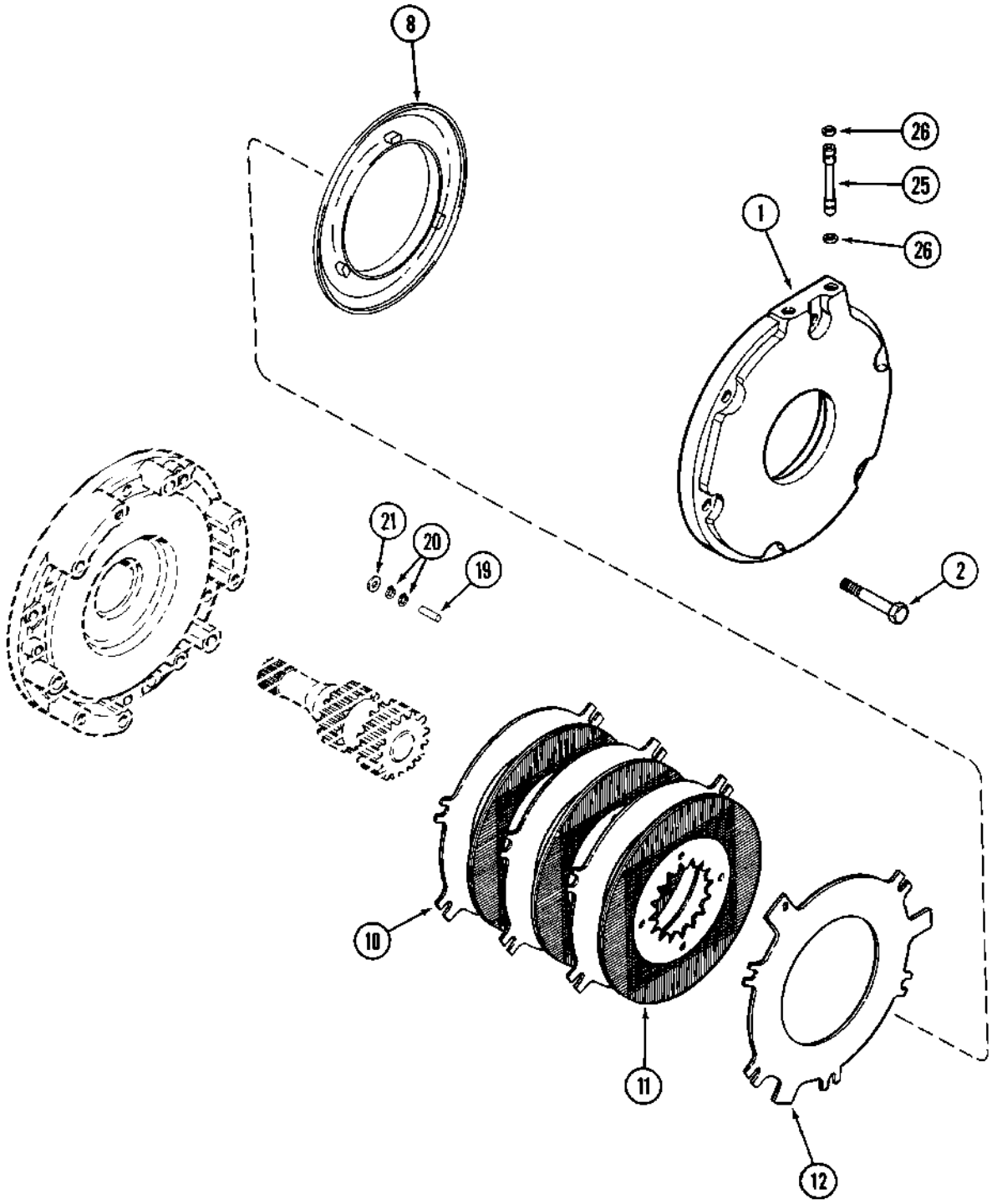

FRENOS - DIFERENCIAL
TRAVÕES - DIFERENCIAL
REMMEN - DIFFERENTIEEL
BREMSER - DIFFERENTIALE

R	N	P.N.	MOD	Q	Description Denominacion	Descrizione Denominação	Description Beschrijving	Bezeichnung Beskrivelse	L.C.
1		1342723C2		2	COVER TAPADERA	COPERCHIO COBERTA	COUVERCLE DEKSEL	DECKEL DÆKSEL	265C
2		813-16110		6	SCREW M16 x 110, 8.8, Right Hand TORNILLO	VITE PARAFUSO	VIS SCHROEF	SCHRAUBE SKRUE	7450
2		814-16100		6	SCREW M16 x 100; 8.8, Left Hand TORNILLO	VITE PARAFUSO	VIS SCHROEF	SCHRAUBE SKRUE	7450
8		1997422C1		2	PISTON EMBOLO	STANTUFFO PISTAO	PISTON ZUIGER	KOLBEN STEMPEL	235S
10		120486C1		8	PLATE, BRAKE COPA DE FRENO	PIASTRA, FRENO PLACA FREIO	COUPELLE DE FREIN PLATE, BRAKE	BREMSPLATTE BREMSEPLADE	Z032
11		120488C2		8	PLATE, BRAKE COPA DE FRENO	PIASTRA, FRENO PLACA FREIO	COUPELLE DE FREIN PLATE, BRAKE	BREMSPLATTE BREMSEPLADE	Z032
12		1981187C1		2	PLATE PLACA	PIASTRA CHAPA	PLAQUE PLAAT	PLATTE PLADE	105P
		1349198C1		6	ADJUSTER Inc. 19, 20 REGULADOR	REGOLATORE REGULADOR	REGLEUR REGELAPPARAAT	EINSTELLVORRICHTING JUSTERER	118A
19		37-1828		1	DOWEL 1/2 x 1-3/4 PITON	GRANO GUIA	PION STEL PEN	PAßTIFT DYVEL	P176
20		100-1450		2	RING, SNAP No. 50 ANILLO DE RESORTE	ANELLO ELASTICO ANEL	ANNEAU D'ARRÊT RING, SNAP	SICHERUNGSRING LÅSERING	054A
21		1342928C1		12	WASHER ARANDELA	ROSETTA PIANA ANILHA	RONDELLE SLUITRING	BEILAGSCHEIBE FLADSKIVE	131R
25		120514C2		4	TUBE TUBO	TUBETTO TUBO	TUBE BUISJE	SCHLAUCH RØR	195T
26		238-5013		8	O-RING 7/16 ID x 1/16 JUNTA HERMETICA	ANELLO TOROIDALE ANEL O	JOINT TORIQUE O-RING	O-RING O-RING	7176

07-07		p1	12/02

PARK AND EMERGENCY BRAKE - LEVER AND LINKAGE
FRENO DI STAZIONAMENTO E DI EMERGENZA - LEVA E TIRANTERIA
FREIN DE STATIONNEMENT - LEVIER ET TRINGLERIE
FESTSTELL- UND NOTBREMSE - HEBEL UND GESTÄNGE

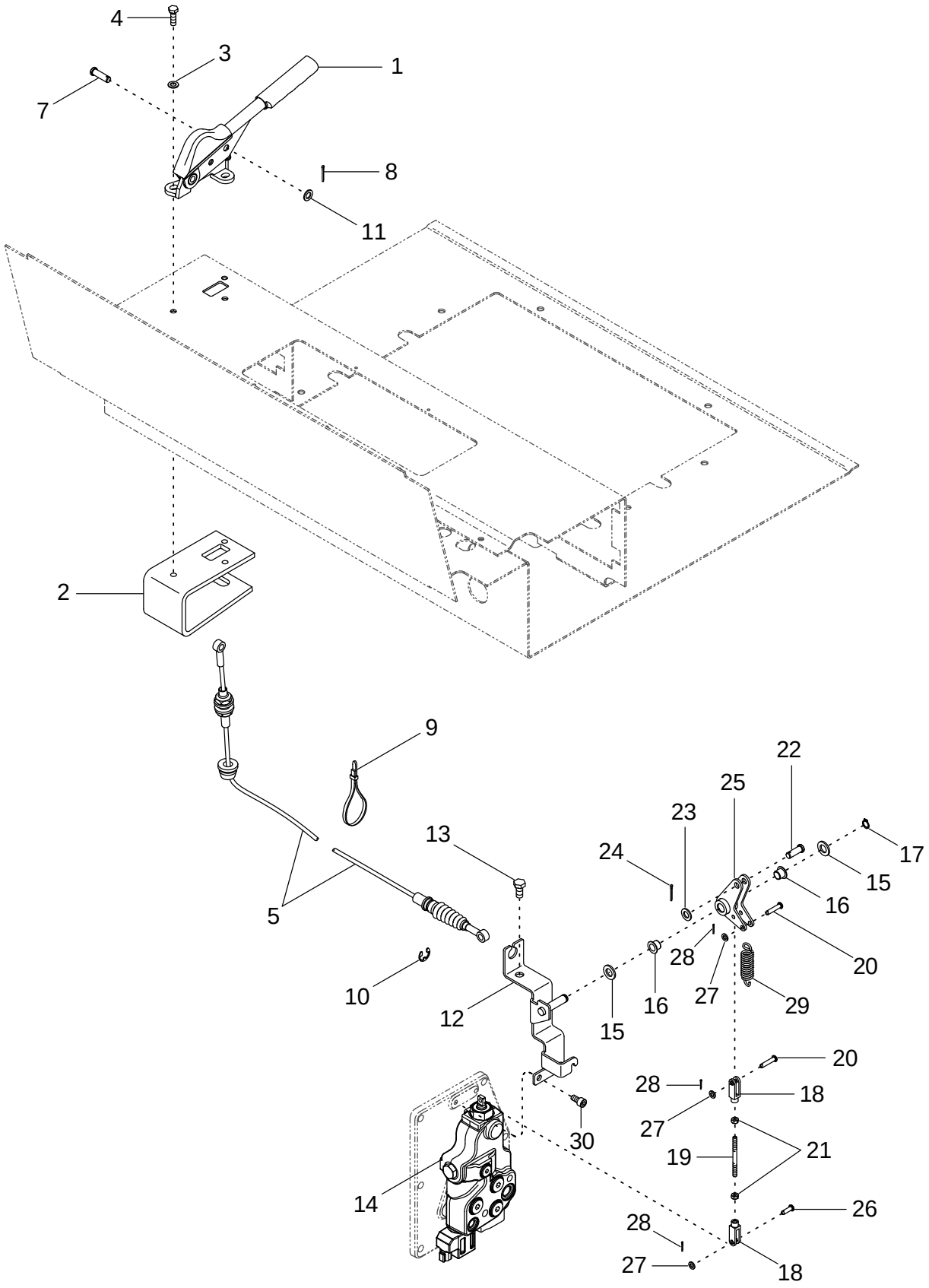

FRENO DE ESTACIONAMIENTO Y EMERGENCIA - PALANCA Y VARILLAJE
TRAVÃO DE ESTACIONAMENTO E EMERGÊNCIA - ALAVANCA E LIGAÇÃO
PARKEER- EN NOODREM - HENDEL EN OVERBRENGING
PARKERINGS- OG NØDBREMSE - BETJENINGSGREB OG FORBINDELSE

R	N	P.N.	MOD	Q	Description Denominacion	Descrizione Denominação	Description Beschrijving	Bezeichnung Beskrivelse	L.C.
1		284357A2		1	HANDLE MANECILLA	MANIGLIA MANIPULO	POIGNÉE HENDEL	HANDGRIFF HAANDTAG	020M
2		375302A1		1	BRACKET PIEZA DE SOPORTE	STAFFA BRACADEIRA	PATTE FIXATION STEUNBEUGEL	HALTERUNG BESLAG	225S
3		895-11008		3	WASHER 9 x 16 x 1,6 mm ARANDELA	ROSETTA PIANA ANILHA	RONDELLE SLUITRING	BEILAGSCHEIBE FLADSKIVE	131R
4		614-8025		3	SCREW M8 x 15; 8.8 TORNILLO	VITE PARAFUSO	VIS SCHROEF	SCHRAUBE SKRUE	P136
5		284297A1		1	CABLE CABLE	CAVO CABO	CABLE KABEL	KABEL KABEL	650C
6		427-6106		1	PIN, CLEVIS PASADOR DE HORQUILL	SPINA, PER FORCELLA CUPILHA	AXE DE CHAPE PIN, CLEVIS	GABELSTIFT GAFFELBOLT	P694
7		427-6125		1	PIN, CLEVIS PASADOR DE HORQUILL	SPINA, PER FORCELLA CUPILHA	AXE DE CHAPE PIN, CLEVIS	GABELSTIFT GAFFELBOLT	P694
8		733-2520		2	SPLIT PIN/SAFETY PIN PASADOR	PERNO DIVISO PINO	GOUPILLE SPLIT PIN/SAFETY PIN	SPLINT/STIFT SPLIT PIN/SAFETY PIN	Z510
9		L11541		1	STRAP BANDA	BANDELLA BANDA	SANGLE RIEM	GURT STROP	532B
10		800-4313		1	SNAP RING ANILLO DE CIERRE	ANELLO ELASTICO ANEL TRAVA	ANNEAU-D'ARRET SNAP RING	SICHERUNGSRING SNAP RING	P345
11		895-18010		2	WASHER 11 x 18 x 1,6 mm ARANDELA	ROSETTA PIANA ANILHA	RONDELLE SLUITRING	SCHEIBE FLADSKIVE	9720
12		451063A1		1	BRACKET PIEZA DE SOPORTE	STAFFA BRACADEIRA	PATTE FIXATION STEUNBEUGEL	HALTERUNG BESLAG	225S
13		614-10020		1	SCREW M10 x 20 TORNILLO	VITE PARAFUSO	VIS SCHROEF	SCHRAUBE SKRUE	P136
14	1	450061A1		1	VALVE VALVULA	VALVOLA VALVULA	SOUPAPE VALVE	VENTIL VALVE	9620
15		895-11012		2	WASHER 13,3 x 24 x 2,5 mm ARANDELA	ROSETTA PIANA ANILHA	RONDELLE SLUITRING	SCHEIBE FLADSKIVE	9720
16		1533540C1		2	EYEBOLT PERNO, OJO	GOLFARE ANEL	BOULON A OEIL OOGBOUT	AUGBOLZEN OEJEBOLT	081G
17		800-1112		1	SNAP RING 12 mm ANILLO DE CIERRE	ANELLO ELASTICO ANEL TRAVA	ANNEAU-D'ARRET SNAP RING	SICHERUNGSRING SNAP RING	P345
18		713-126		2	CLEVIS HORQUILLA PEQUENA	FORCELLINO FORQUILHA	FOURCHETTE GAFFEL	GABEL GAFFELBOLT	P472
19		428302A1		1	ROD VARILLA	ASTA HASTE	TRINGLE STANG	STANGE STANG	090A
20		728-630		2	PIN, CLEVIS PASADOR DE HORQUILL	SPINA, PER FORCELLA CUPILHA	AXE DE CHAPE PIN, CLEVIS	GABELSTIFT GAFFELBOLT	P694
21		829-1406		2	NUT M6; 10.9 TUERCA	DADO PORCA	ECROU MOER	MUTTER MØTRIK	010D
22		427-6106		1	PIN, CLEVIS PASADOR DE HORQUILL	SPINA, PER FORCELLA CUPILHA	AXE DE CHAPE PIN, CLEVIS	GABELSTIFT GAFFELBOLT	P694
23		895-11010		1	WASHER 11 x 20 x 2 mm ARANDELA	ROSETTA PIANA ANILHA	RONDELLE SLUITRING	SCHEIBE FLADSKIVE	9720

(1) See Figure 07-09

07-07		p2	12/02

PARK AND EMERGENCY BRAKE - LEVER AND LINKAGE
FRENO DI STAZIONAMENTO E DI EMERGENZA - LEVA E TIRANTERIA
FREIN DE STATIONNEMENT - LEVIER ET TRINGLERIE
FESTSTELL- UND NOTBREMSE - HEBEL UND GESTÄNGE

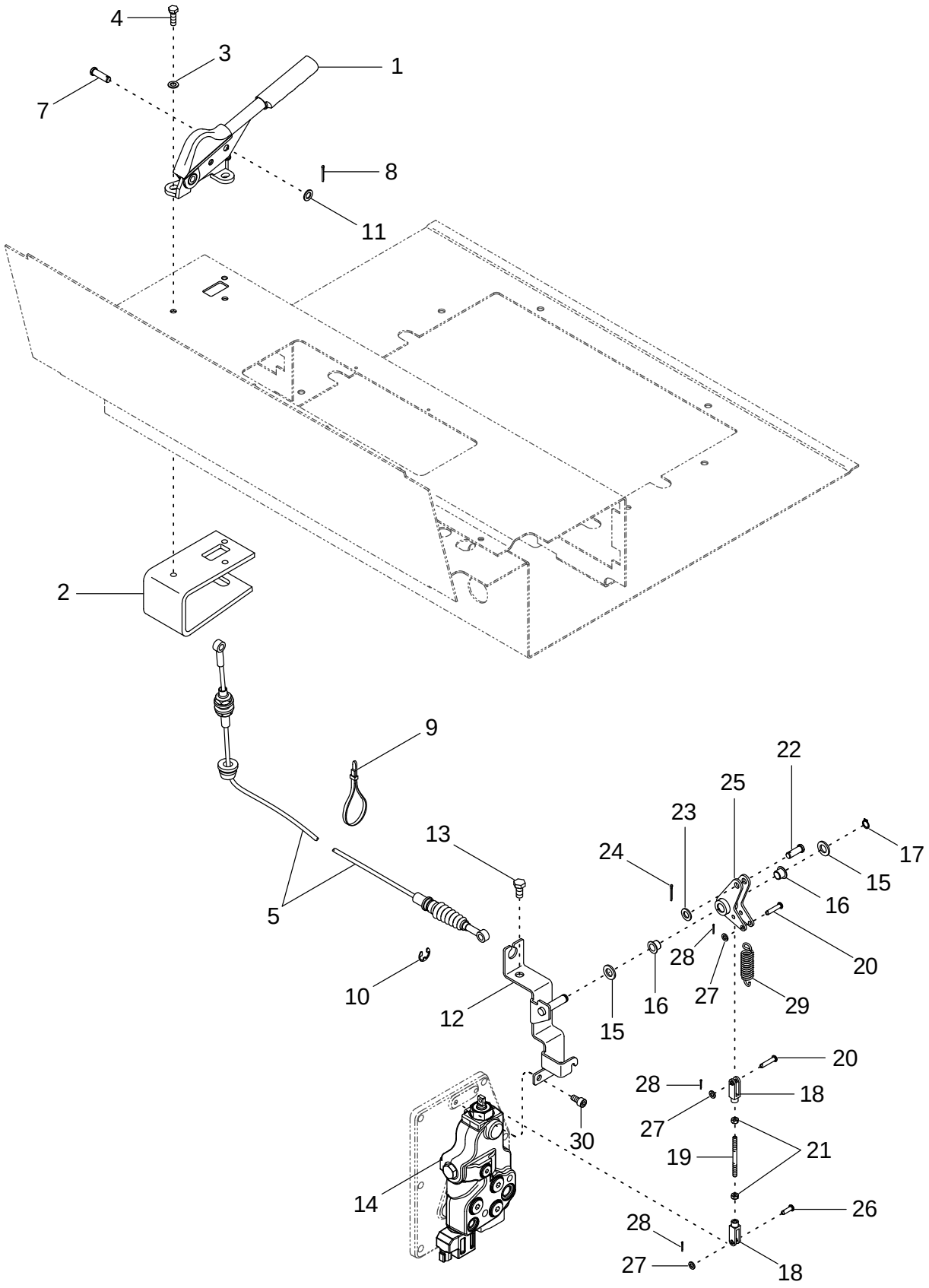

FRENO DE ESTACIONAMIENTO Y EMERGENCIA - PALANCA Y VARILLAJE
TRAVÃO DE ESTACIONAMENTO E EMERGÊNCIA - ALAVANCA E LIGAÇÃO
PARKEER- EN NOODREM - HENDEL EN OVERBRENGING
PARKERINGS- OG NØDBREMSE - BETJENINGSGREB OG FORBINDELSE

R	N	P.N.	MOD	Q	Description Denominacion	Descrizione Denominação	Description Beschrijving	Bezeichnung Beskrivelse	L.C.
24		733-2520		1	SPLIT PIN/SAFETY PIN PASADOR	PERNO DIVISO PINO	GOUPILLE SPLIT PIN/SAFETY PIN	SPLINT/STIFT SPLIT PIN/SAFETY PIN	Z510
25		428306A1		1	BELLCRANK CODO DE PALANCA	LEVA A SQUADRA CODO DE PALANCA	LEVIER DE RENVOI TUIMELAAR	KNIEHEBEL VINKELARM	048L
26		728-620		1	PIN, CLEVIS PASADOR DE HORQUILL	SPINA, PER FORCELLA CUPILHA	AXE DE CHAPE PIN, CLEVIS	GABELSTIFT GAFFELBOLT	P694
27		895-11006		3	WASHER 6,6 x 12 x 1,6 mm ARANDELA	ROSETTA PIANA ANILHA	RONDELLE SLUITRING	BEILAGSCHEIBE FLADSKIVE	131R
28		733-1610		3	PIN, SPLIT (COTTER) 1,6 x 10 mm PASADOR ABIERTO	COPPIGLIA TROCO DE ABRIR	GOUPILLE SPLITPEN	SPLINT SPLITBOLT	P160
29		327572A2		1	SPRING RESORTE	MOLLA MOLA	RESSORT VEER	FEDER FJEDER	100M
30		628-8016		2	SCREW M8 x 16; 10.9 TORNILLO	VITE PARAFUSO	VIS SCHROEF	SCHRAUBE SKRUE	7450

PARK AND EMERGENCY BRAKE - HYDRAULIC SYSTEM
FRENO DI STAZIONAMENTO E DI EMERGENZA - IMPIANTO IDRAULICO
FREIN DE STATIONNEMENT - CIRCUIT HYDRAULIQUE
FESTSTELL- UND NOTBREMSE - HYDRAULIKANLAGE

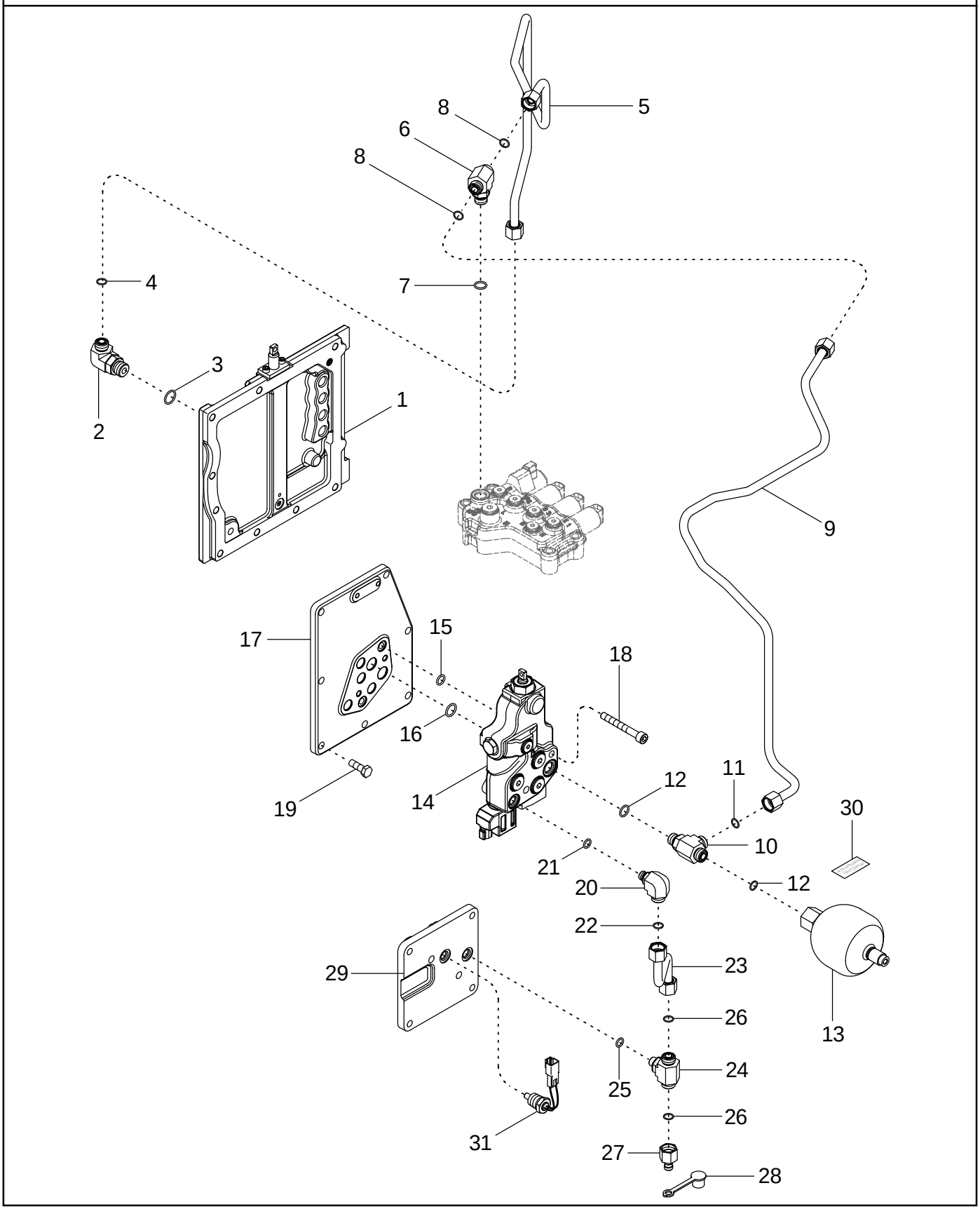

FRENO DE ESTACIONAMIENTO Y EMERGENCIA - SISTEMA HIDRÁULICO
TRAVÃO DE ESTACIONAMENTO E EMERGÊNCIA - SISTEMA HIDRÁULICO
PARKEER- EN NOODREM - HYDRAULISCH SYSTEEM
PARKERINGS- OG NØDBREMSE - HYDRAULISK SYSTEM

R	N	P.N.	MOD	Q	Description Denominacion	Descrizione Denominação	Description Beschrijving	Bezeichnung Beskrivelse	L.C.
1	1	445535A2		1	PLATE ASSY. PLACA (CONJUNTO)	PIASTRA, COMPLESSIVO PLACA CONJUNTO	PLAQUE (ASSEMBLEE) PLATE ASSY.	PLATTE (KPLT.) PLATE ASSY.	P433
2		700-326		1	ELBOW 13/16 fc sl x 22 Or, Inc. 3, 4 CODO	GOMITO JOELHO	COUDE ELLEBOOG	KNIESTÜCK VINKELRØR	2940
3		637-63193		1	O-RING 19,3 ID x 2,2 JUNTA HERMETICA	ANELLO TOROIDALE ANEL O	JOINT TORIQUE O-RING	O-RING O-RING	7176
4		238-6014		1	O-RING 1/2 ID x 1/16 JUNTA HERMETICA	ANELLO TOROIDALE ANEL O	JOINT TORIQUE O-RING	O-RING O-RING	7176
5		433595A2		1	TUBE ASSY. TUBO (CONJUNTO)	TUBO, COMPLESSIVO TUBO CONJUNTO	TUYAUTERIE TUBE ASSY.	ROHRLEITUNG TUBE ASSY.	P465
6		700-402		1	TEE 13/16 fc sl x 18 Or, Inc. 7, 8 RACOR-T	PEZZO A T TE	TE TEE	T-STÜCK T-STYKKE	9020
7		637-63153		1	O-RING 15,3 ID x 2,2 JUNTA HERMETICA	ANELLO TOROIDALE O-RING	JOINT THORIQUE O-RING	DICHTRING O-RING	055A
8		238-6014		2	O-RING 1/2 ID x 1/16 JUNTA HERMETICA	ANELLO TOROIDALE ANEL O	JOINT TORIQUE O-RING	O-RING O-RING	7176
9		451179A1	a	1	TUBE ASSY. TUBO (CONJUNTO)	TUBO, COMPLESSIVO TUBO CONJUNTO	TUYAUTERIE TUBE ASSY.	ROHRLEITUNG TUBE ASSY.	P465
9		451179A2	b	1	TUBE ASSY. TUBO (CONJUNTO)	TUBO, COMPLESSIVO TUBO CONJUNTO	TUYAUTERIE TUBE ASSY.	ROHRLEITUNG TUBE ASSY.	P465
10		700-412		1	TEE 13/16 fc sl x 18 Or, Inc. 11, 12 RACOR-T	PEZZO A T TE	TE TEE	T-STÜCK T-STYKKE	9020
11		637-63153		1	O-RING 15,3 ID x 2,2 JUNTA HERMETICA	ANELLO TOROIDALE O-RING	JOINT THORIQUE O-RING	DICHTRING O-RING	055A
12		238-6014		2	O-RING 1/2 ID x 1/16 JUNTA HERMETICA	ANELLO TOROIDALE ANEL O	JOINT TORIQUE O-RING	O-RING O-RING	7176
13		237995A1		1	ACCUMULATOR ACUMULADOR	ACCUMULATORE ACUMULADOR	ACCUMULATEUR ACCUMULATOR	AKKUMULATOR AKKUMULATOR	Z128
14	2	450061A1		1	VALVE VALVULA	VALVOLA VALVULA	SOUPAPE VALVE	VENTIL VALVE	9620
15		238-5112		6	O-RING 1/2 ID x 3/32 JUNTA HERMETICA	ANELLO TOROIDALE ANEL O	JOINT TORIQUE O-RING	O-RING O-RING	7176
16		238-5115		2	O-RING 11/16 ID x 3/32 JUNTA HERMETICA	ANELLO TOROIDALE ANEL O	JOINT TORIQUE O-RING	O-RING O-RING	7176
17		449874A1		1	COVER TAPADERA	COPERCHIO COBERTA	COUVERCLE DEKSEL	DECKEL DÆKSEL	265C
18		864-10080		2	SCREW M10 x 80; 8.8 TORNILLO	VITE PARAFUSO	VIS SCHROEF	SCHRAUBE SKRUE	7450
19		614-10030		7	SCREW M10 x 30; 8.8 TORNILLO	VITE PARAFUSO	VIS SCHROEF	SCHRAUBE SKRUE	7450

(1) See Figure 06-06
(2) See Figure 07-09
(a) BSN AJB0302120
(b) ASN AJB0302120

PARK AND EMERGENCY BRAKE - HYDRAULIC SYSTEM
FRENO DI STAZIONAMENTO E DI EMERGENZA - IMPIANTO IDRAULICO
FREIN DE STATIONNEMENT - CIRCUIT HYDRAULIQUE
FESTSTELL- UND NOTBREMSE - HYDRAULIKANLAGE

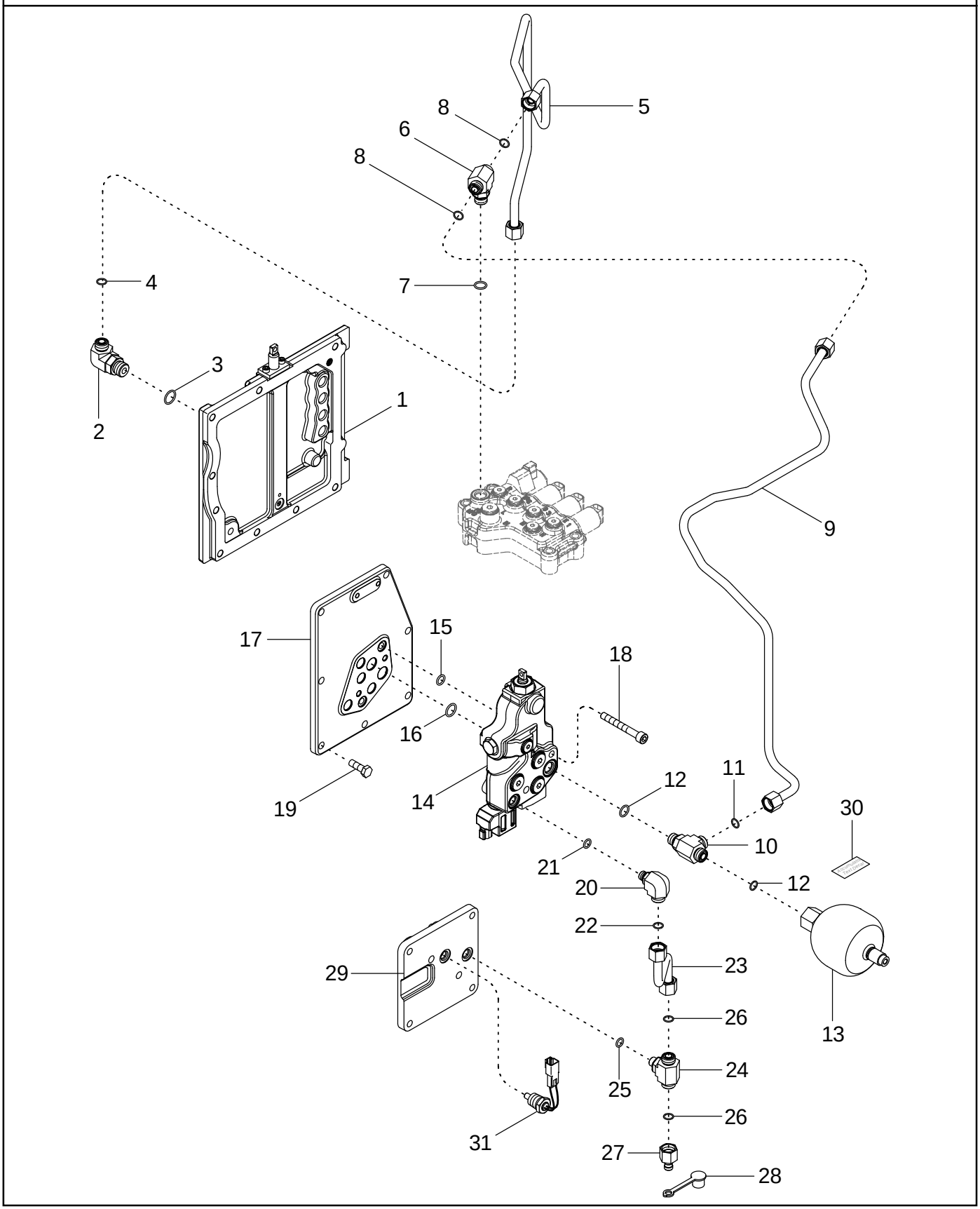

FRENO DE ESTACIONAMIENTO Y EMERGENCIA - SISTEMA HIDRÁULICO
TRAVÃO DE ESTACIONAMENTO E EMERGÊNCIA - SISTEMA HIDRÁULICO
PARKEER- EN NOODREM - HYDRAULISCH SYSTEEM
PARKERINGS- OG NØDBREMSE - HYDRAULISK SYSTEM

R	N	P.N.	MOD	Q	Description Denominacion	Descrizione Denominação	Description Beschrijving	Bezeichnung Beskrivelse	L.C.
20		700-332		1	ELBOW 13/16 fc sl x 14 Or, Inc. 21, 22				
						GOMITO	COUDE	KNIESTÜCK	2940
					CODO	JOELHO	ELLEBOOG	VINKELRØR	
21		637-63113		1	O-RING 11,3 ID x 2,2	ANELLO TOROIDALE	JOINT THORIQUE	DICHTRING	055A
					JUNTA HERMETICA	O-RING	O-RING	O-RING	
22		238-6014		1	O-RING 1/2 ID x 1/16	ANELLO TOROIDALE	JOINT TORIQUE	O-RING	7176
					JUNTA HERMETICA	ANEL O	O-RING	O-RING	
23		86989145		1	TUBE ASSY.	TUBO, COMPLESSIVO	TUYAUTERIE	ROHRLEITUNG	P465
					TUBO (CONJUNTO)	TUBO CONJUNTO	TUBE ASSY.	TUBE ASSY.	
24		700-443		1	TEE 13/16 fc sl x 14 Or, Inc. 25, 26				
						PEZZO A T	TE	T-STÜCK	9020
					RACOR-T	TE	TEE	T-STYKKE	
25		637-63113		1	O-RING 11,3 ID x 2,2	ANELLO TOROIDALE	JOINT THORIQUE	DICHTRING	055A
					JUNTA HERMETICA	O-RING	O-RING	O-RING	
26		238-6014		2	O-RING 1/2 ID x 1/16	ANELLO TOROIDALE	JOINT TORIQUE	O-RING	7176
					JUNTA HERMETICA	ANEL O	O-RING	O-RING	
27		322529A1		1	COUPLING	TESTA A CAMPANA	CHAPE	GLOCKENKOPF	109T
					ELEMENTO DE ACOPLAI	ELEMENTO DE ACOPLAI	KOPPELING	KOBLING	
28		143349A1		1	CAP	TAPPO SERBATOIO	CHAPEAU	KAPPE	052T
					TAPON DEL DEPOSITO	TAMPAO DE RESERVAT	RESERVOIRDOP	TANKDAEKSEL	
29	1	436285A1		1	COVER	COPERCHIO	COUVERCLE	DECKEL	265C
					TAPADERA	COBERTA	DEKSEL	DÆKSEL	
30		82029752		1	PLAQUE, DATA	TARGHETTA	PLAQUE MINERALOGIQU	TYPENSHILD	065T
					PLACA INDICADORA	PLACA IDENTIFICADORA	IDENTIFIKATIEPLAATJE	SKILT	
31		397240A1		1	SENDOR, TEMPERATURE	Transmission			
						TRASMETTITORE, TEMP	THERMO SONDE	TEMPERATURGEBER	Z366
					TERMOSONDA	TERMOSONDA	SENDOR, TEMPERATUR	SENDER, TEMPERATUR	

(1) See Figure 07-10

PARK AND EMERGENCY BRAKE - VALVE ASSEMBLY
FRENO DI STAZIONAMENTO E DI EMERGENZA - GRUPPO DELLA VALVOLA
FREIN DE STATIONNEMENT - DISTRIBUTEUR
FESTSTELLBREMS- UND NOTBREMSVENTIL

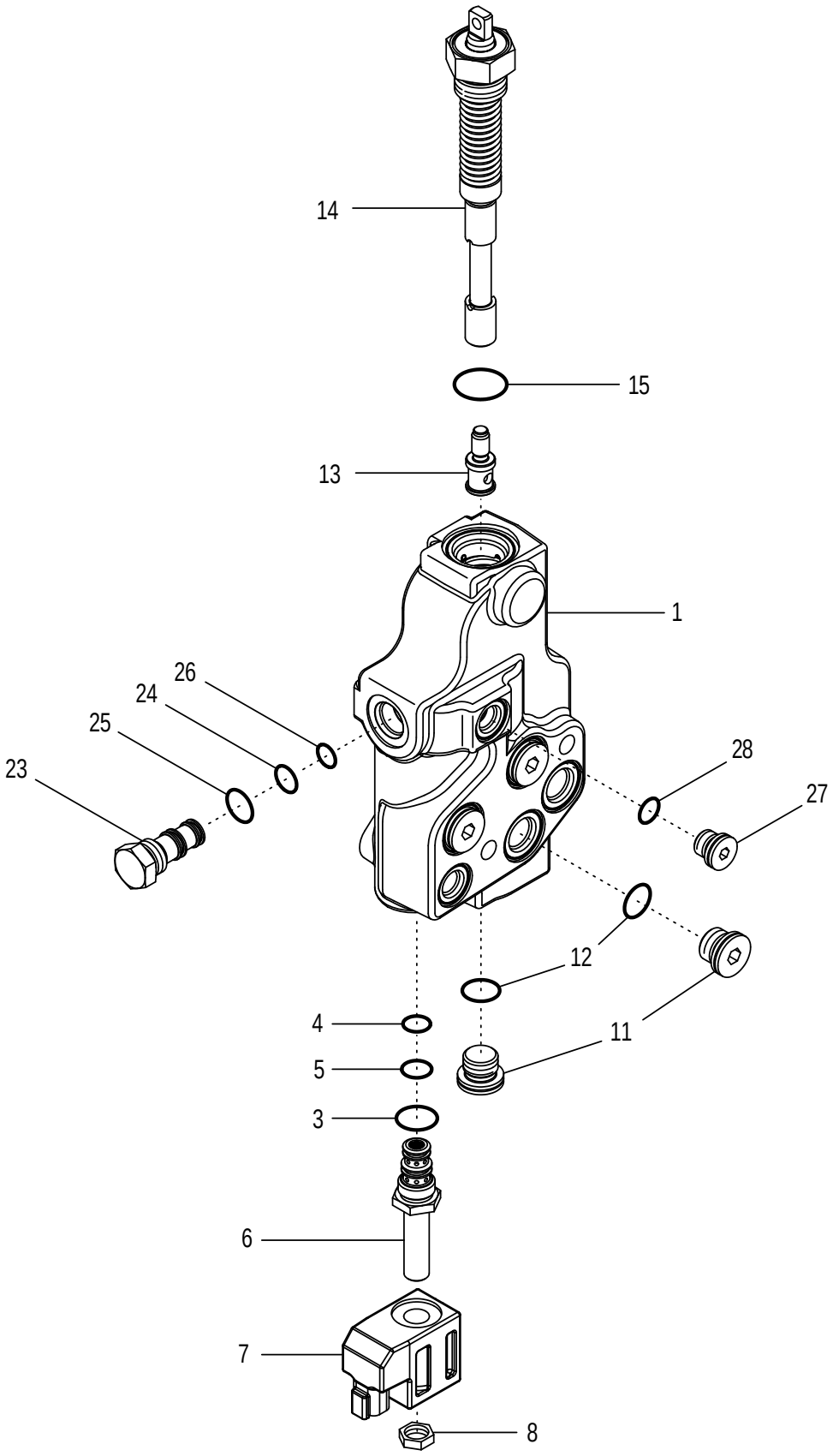

FRENO DE ESTACIONAMIENTO Y EMERGENCIA - CONJUNTO DE LA VÁLVULA
TRAVÃO DE ESTACIONAMENTO E EMERGÊNCIA - CONJUNTO DA VÁLVULA
PARKEER- EN NOODREM - KLEPCONSTRUCTIE
PARKERINGS- OG NØDBREMSE - VENTILSAMLING

R	N	P.N.	MOD	Q	Description Denominacion	Descrizione Denominação	Description Beschrijving	Bezeichnung Beskrivelse	L.C.
		450061A1		1	VALVE Inc. 1 - 28 VALVULA	VALVOLA VALVULA	SOUPAPE VALVE	VENTIL VALVE	9620
1		**NSS**		1	NOT SERVICED SEPARATELY Body				
						NON FORNITO SEPARAT	NON FOURNI SEPAREMI	KEIN ERSATZTEIL	064N
					NO SE REPARA SEPARA	NOT SERVICED SEPARA	NIET ALLEEN VERKRIJG	NOT SERVICED SEPARA	
		349295A1		1	SOLENOID Inc. 3 - 8 SOLENOIDE	SOLENOIDE SOLEMOID	SOLENOIDE SOLENOIDE	MAGNETSPULE, MECH. MAGNETVENTIL	168S
3		**237-6008**		1	O-RING 41/64 ID x 3/32 JUNTA HERMETICA	ANELLO TOROIDALE O-RING	JOINT THORIQUE O-RING	DICHTRING O-RING	055A
4		**238-5013**		1	O-RING 7/16 ID x 1/16 JUNTA HERMETICA	ANELLO TOROIDALE ANEL O	JOINT TORIQUE O-RING	O-RING O-RING	7176
5		**238-5014**		1	O-RING 1/2 ID x 1/16 JUNTA HERMETICA	ANELLO TOROIDALE ANEL O	JOINT TORIQUE O-RING	O-RING O-RING	7176
6		**NSS**		1	NOT SERVICED SEPARATELY Cartridge				
						NON FORNITO SEPARAT	NON FOURNI SEPAREMI	KEIN ERSATZTEIL	064N
					NO SE REPARA SEPARA	NOT SERVICED SEPARA	NIET ALLEEN VERKRIJG	NOT SERVICED SEPARA	
7		**298614A1**		1	COIL BOBINA	BOBINA BOBINE	BOBINE KLOS	SPULE SPOLE	083B
8		**349292A1**		1	NUT TUERCA	DADO PORCA	ECROU MOER	MUTTER MØTRIK	010D
11		**221578A1**		4	PLUG Inc. 12 TAPÓN	TAPPO BUJÃO	BOUCHON PLUG	STOPFEN PROP	050T
12		**637-63153**		1	O-RING 15,3 ID x 2,2 JUNTA HERMETICA	ANELLO TOROIDALE O-RING	JOINT THORIQUE O-RING	DICHTRING O-RING	055A
13		**295920A1**		1	PIN PERNO	PERNO PERNO	AXE PEN	BOLZEN STIFT	080P
14		**314877A2**		1	SPOOL Inc. 15 PISTONCILLO	PISTONCINO CARRETO	TIROIR SPOEL	SPULE SPOLE	134P
15		**637-64236**		1	O-RING 23,6 ID x 2,9 JUNTA HERMETICA	ANELLO TOROIDALE ANEL O	JOINT TORIQUE O-RING	O-RING O-RING	7176
22		**NSS**		1	NOT SERVICED SEPARATELY Spring				
						NON FORNITO SEPARAT	NON FOURNI SEPAREMI	KEIN ERSATZTEIL	064N
					NO SE REPARA SEPARA	NOT SERVICED SEPARA	NIET ALLEEN VERKRIJG	NOT SERVICED SEPARA	
23		**315514A1**		1	PLUG Inc. 24 - 26 TAPÓN	TAPPO BUJÃO	BOUCHON PLUG	STOPFEN PROP	050T
24		**238-6014**		1	O-RING 1/2 ID x 1/16 JUNTA HERMETICA	ANELLO TOROIDALE ANEL O	JOINT TORIQUE O-RING	O-RING O-RING	7176
25		**238-6013**		1	O-RING 7/16 ID x 1/16 JUNTA HERMETICA	ANELLO TOROIDALE ANEL O	JOINT TORIQUE O-RING	O-RING O-RING	7176
26		**237-6008**		1	O-RING 41/64 ID x 3/32 JUNTA HERMETICA	ANELLO TOROIDALE O-RING	JOINT THORIQUE O-RING	DICHTRING O-RING	055A
27		**221576A1**		1	PLUG M14 Or, Inc. 28 TAPÓN	TAPPO BUJÃO	BOUCHON PLUG	STOPFEN PROP	050T
28		**637-63113**		1	O-RING 11,3 ID x 2,2 JUNTA HERMETICA	ANELLO TOROIDALE O-RING	JOINT THORIQUE O-RING	DICHTRING O-RING	055A

07-10		p1	12/02

PARK AND EMERGENCY BRAKE - BRAKE ASSEMBLY
FRENO DI STAZIONAMENTO E DI EMERGENZA - GRUPPO DEI FRENI
FREIN DE STATIONNEMENT - FREIN
FESTSTELL- UND NOTBREMSE

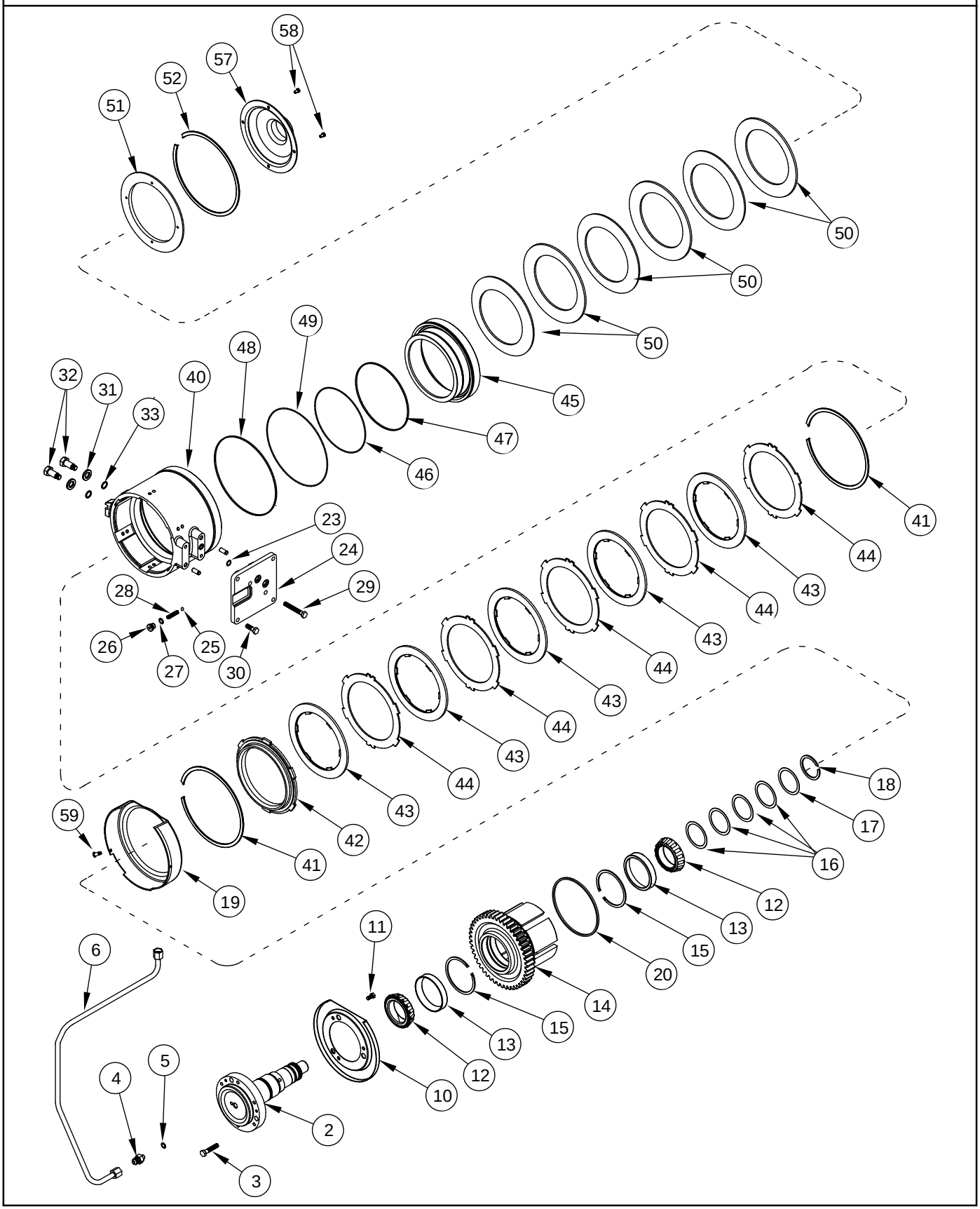

FRENO DE ESTACIONAMIENTO Y EMERGENCIA - CONJUNTO DEL FRENO
TRAVÃO DE ESTACIONAMENTO E EMERGÊNCIA - CONJUNTO DO TRAVÃO
PARKEER- EN NOODREM - REMCONSTRUCTIE
PARKERINGS- OG NØDBREMSE - BREMSESAMLING

R	N	P.N.	MOD	Q	Description Denominacion	Descrizione Denominação	Description Beschrijving	Bezeichnung Beskrivelse	L.C.
2		199320A1		1	SHAFT EJE	ALBERO VEIO	ARBRE AS	WELLE AKSEL	016A
3		813-10050		6	SCREW M10 x 50; 8 TORNILLO	VITE PARAFUSO	VIS SCHROEF	SCHRAUBE SKRUE	7450
4		218-5351		1	CONNECTOR, HYD. 3/4 fl x 9/16 Or, Inc. 5 RACOR	RACCORDO IDRAULICO CONECTOR	RACCORD VERBINDING	STUTZEN FORSKRUNING	020R
5		237-6006		1	O-RING 15/32 ID x 5/64 JUNTA HERMETICA	ANELLO TOROIDALE O-RING	JOINT THORIQUE O-RING	DICHTRING O-RING	055A
6		124306A1		1	PIPE CUELLO DE CARGA	TUBO TUBO DE ENCHIMENTO	TUYAU OPVULPIJP	ROHR PAAFYLDNINGSSTUDS	200T
10		1997881C1		1	SHIELD PROTECCION	PROTEZIONE PROTECCAO	PROTECTION AFSCHERMING	SCHUTZ BESKYTTELSESKÆRM	224P
11		806-8016		3	SCREW M8 x 16; 10.9 TORNILLO	VITE PARAFUSO	VIS SCHROEF	SCHRAUBE SKRUE	7450
12		630694C1		2	BEARING, CONE CONO	CONO DEL CUSCINETTO CONE	CONE DE ROULEMENT KEGEL	LAGERKONUS LEJEKONUS	237C
13		630695C1		2	BEARING, CUP PISTA DE RODAMIENTO	ANELLO CUSCINETTO ANILHA ROLAMENTO	CUVETTE ROULEMENT LAGER, CUP	LAGERSCHALE LEJERING	062A
14		222856A1		1	PINION PINON	PIGNONE PINHAO	PIGNON PINION	RITZEL PINION	P045
15		101-21412		2	RING, SNAP No. 412 ANILLO DE RESORTE	ANELLO ELASTICO ANEL	ANNEAU D'ARRÊT RING, SNAP	SICHERUNGSRING LÅSERING	054A
16		138121A1		AR	SHIM 0,20 mm SUPLEMENTO	SPESSORE CALCO DE AFINACAO	CALE D'EPAISSEUR DIKTEPLAAT	EINSTELLSCHEIBCHEN MELLEMLAEG	198S
16		1997893C1		AR	SHIM 0,51 mm SUPLEMENTO	SPESSORE CALCO DE AFINACAO	CALE D'EPAISSEUR DIKTEPLAAT	EINSTELLSCHEIBCHEN MELLEMLAEG	198S
16		1997894C1		AR	SHIM 0,56 mm SUPLEMENTO	SPESSORE CALCO DE AFINACAO	CALE D'EPAISSEUR DIKTEPLAAT	EINSTELLSCHEIBCHEN MELLEMLAEG	198S
16		1997895C1		AR	SHIM 0,64 mm SUPLEMENTO	SPESSORE CALCO DE AFINACAO	CALE D'EPAISSEUR DIKTEPLAAT	EINSTELLSCHEIBCHEN MELLEMLAEG	198S
17		1277309C1		1	WASHER ARANDELA	ROSETTA PIANA ANILHA	RONDELLE SLUITRING	BEILAGSCHEIBE FLADSKIVE	131R
18		1997891C1		1	RING, SNAP ANILLO DE RESORTE	ANELLO ELASTICO ANEL	ANNEAU D'ARRÊT RING, SNAP	SICHERUNGSRING LÅSERING	054A
19		117853A1		1	HOUSING CAVIDAD	ALLOGGIAMENTO ALOJAMENTO	CARTER HUIS	GEHÄUSE HUS	014V
20		198853A1		1	GASKET JUNTA HERMETICA	GUARNIZIONE JUNTA	JOINT DICHTINGSSTUK	DICHTUNG, FLACH PAKNING	123G
23		238-5014		1	O-RING 1/2 ID x 1/16 JUNTA HERMETICA	ANELLO TOROIDALE ANEL O	JOINT TORIQUE O-RING	O-RING O-RING	7176
24		436285A1		1	COVER Inc. 25 - 28 TAPADERA	COPERCHIO COBERTA	COUVERCLE DEKSEL	DECKEL DÆKSEL	265C
25		511-1070		1	BALL 7 mm BOLA	SFERA ESFERA	BILLE KOGEL	KUGEL KUGLE	0460
26		221576A1		1	PLUG M14 Or, Inc. 27 TAPÓN	TAPPO BUJÃO	BOUCHON PLUG	STOPFEN PROP	050T
27		637-63113		1	O-RING 11,3 ID x 2,2 JUNTA HERMETICA	ANELLO TOROIDALE O-RING	JOINT THORIQUE O-RING	DICHTRING O-RING	055A

07-10		p2	12/02

PARK AND EMERGENCY BRAKE - BRAKE ASSEMBLY
FRENO DI STAZIONAMENTO E DI EMERGENZA - GRUPPO DEI FRENI
FREIN DE STATIONNEMENT - FREIN
FESTSTELL- UND NOTBREMSE

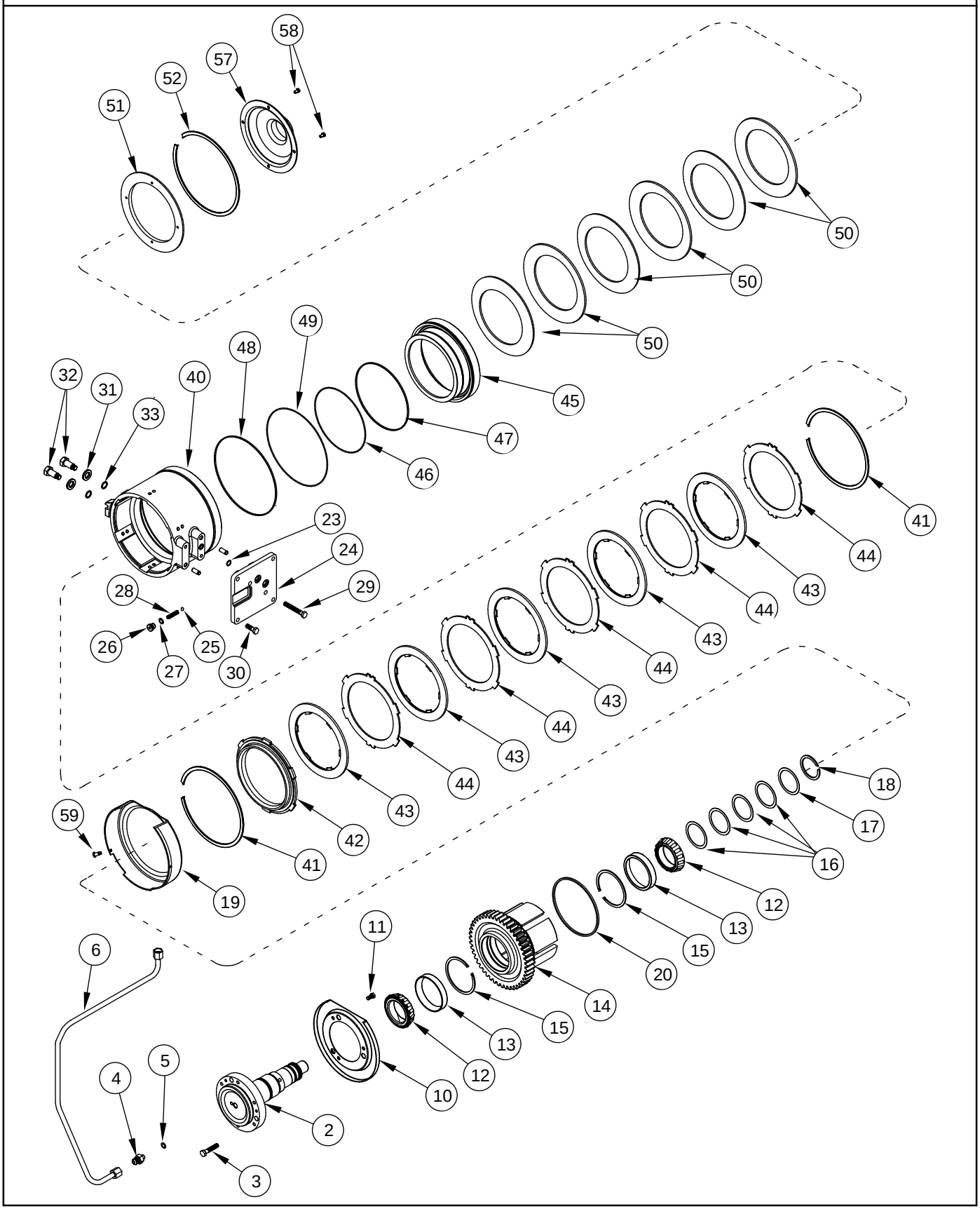

FRENO DE ESTACIONAMIENTO Y EMERGENCIA - CONJUNTO DEL FRENO
TRAVÃO DE ESTACIONAMENTO E EMERGÊNCIA - CONJUNTO DO TRAVÃO
PARKEER- EN NOODREM - REMCONSTRUCTIE
PARKERINGS- OG NØDBREMSE - BREMSESAMLING

R	N	P.N.	MOD	Q	Description Denominacion	Descrizione Denominação	Description Beschrijving	Bezeichnung Beskrivelse	L.C.
28		255404A3		1	SPRING RESORTE	MOLLA MOLA	RESSORT VEER	FEDER FJEDER	100M
29		628-10030		4	SCREW M10 x 30; 10.9 TORNILLO	VITE PARAFUSO	VIS SCHROEF	SCHRAUBE SKRUE	7450
30		828-10070		2	SCREW M10 x 70; 10.9 TORNILLO	VITE PARAFUSO	VIS SCHROEF	SCHRAUBE SKRUE	7450
31		896-12016		2	WASHER 17,5 x 30 x 4 mm ARANDELA	ROSETTA PIANA ANILHA	RONDELLE SLUITRING	SCHEIBE FLADSKIVE	9720
32		198336A1		2	SCREW TORNILLO	VITE PARAFUSO	VIS SCHROEF	SCHRAUBE SKRUE	040V
33		238-5114		2	O-RING 5/8 ID x 3/32 JUNTA HERMETICA	ANELLO TOROIDALE ANEL O	JOINT TORIQUE O-RING	O-RING O-RING	7176
40		195066A3		1	CARRIER EJE DE SATELITES	PORTASATELLITI PORTA-SATELITES	PILIER, SOUTIEN SATELIETDRAGER	PLANETENTRÄGER SPIDSHJULSHOLDER	196P
41		198502A1		2	SNAP RING ANILLO DE CIERRE	ANELLO ELASTICO ANEL TRAVA	ANNEAU-D'ARRET SNAP RING	SICHERUNGSRING SNAP RING	P345
42		195068A2		1	PLATE PLACA	PIASTRA CHAPA	PLAQUE PLAAT	PLATTE PLADE	105P
43		118421A1		5	BRAKE DISC DISCO DE FRENO	DISCO FRENO DISCO DE TRAVAO	DISQUE DE FREIN REMSCHIJF	BREMSSCHEIBE BREMSESKIVE	064D
44		195067A2		5	PLATE PLACA	PIASTRA CHAPA	PLAQUE PLAAT	PLATTE PLADE	105P
45		195069A2		1	PISTON EMBOLO	STANTUFFO PISTAO	PISTON ZUIGER	KOLBEN STEMPEL	235S
46		238-7169		1	GASKET 7-1/2 ID x 3/32 JUNTA HERMETICA	GUARNIZIONE JUNTA	JOINT DICHTINGSSTUK	DICHTUNG, FLACH PAKNING	3720
47		198684A1		1	SEALRING RETEN	ANELLO, GUARNIZIONE ANEL VEDADOR	JOINT ANNULAIRE SEALRING	LIPPENDICHTING SEALRING	Z125
48		238-7175		1	O-RING 9 ID x 3/32 JUNTA HERMETICA	ANELLO TOROIDALE O-RING	JOINT THORIQUE O-RING	DICHTRING O-RING	055A
49		198685A1		1	SEALRING RETEN	ANELLO, GUARNIZIONE ANEL VEDADOR	JOINT ANNULAIRE SEALRING	LIPPENDICHTING SEALRING	Z125
50		195118A1		6	WASHER ARANDELA	ROSETTA PIANA ANILHA	RONDELLE SLUITRING	BEILAGSCHEIBE FLADSKIVE	131R
51		284935A1		1	PLATE, BACKING PLACA DE APOYO	PIASTRA DI SPALLAMEN PLACA DE APOYO	PLAQUE D"APPUI BAKPLAT	STÜTZPLATTE BAKPLADE	A010
52		198501A1		1	SNAP RING ANILLO DE CIERRE	ANELLO ELASTICO ANEL TRAVA	ANNEAU-D'ARRET SNAP RING	SICHERUNGSRING SNAP RING	P345
57		296268A1		1	GUARD DEFENSA	RIPARO PROTECCAO	GARANT AFSCHERMING	SCHUTZBLECH BESKYTTELSESSKAERM	070R
58		806-6010		4	SCREW M6 x 10; 10.9 TORNILLO	VITE PARAFUSO	VIS SCHROEF	SCHRAUBE SKRUE	7450
59		782-84413		3	SCREW M4,8 X 13 TORNILLO	VITE PARAFUSO	VIS SCHROEF	SCHRAUBE SKRUE	7450

07-11		p1	08/04

PARK BRAKE - RELEASE, BSN AJB0355923
FRENO DI STAZIONAMENTO - RILASCIO, BSN AJB0355923
FREIN DE STATIONNEMENT - DESSERRAGE, BSN AJB0355923
FESTSTELLBREMSEN-ENTRIEGELUNG, BSN AJB0355923

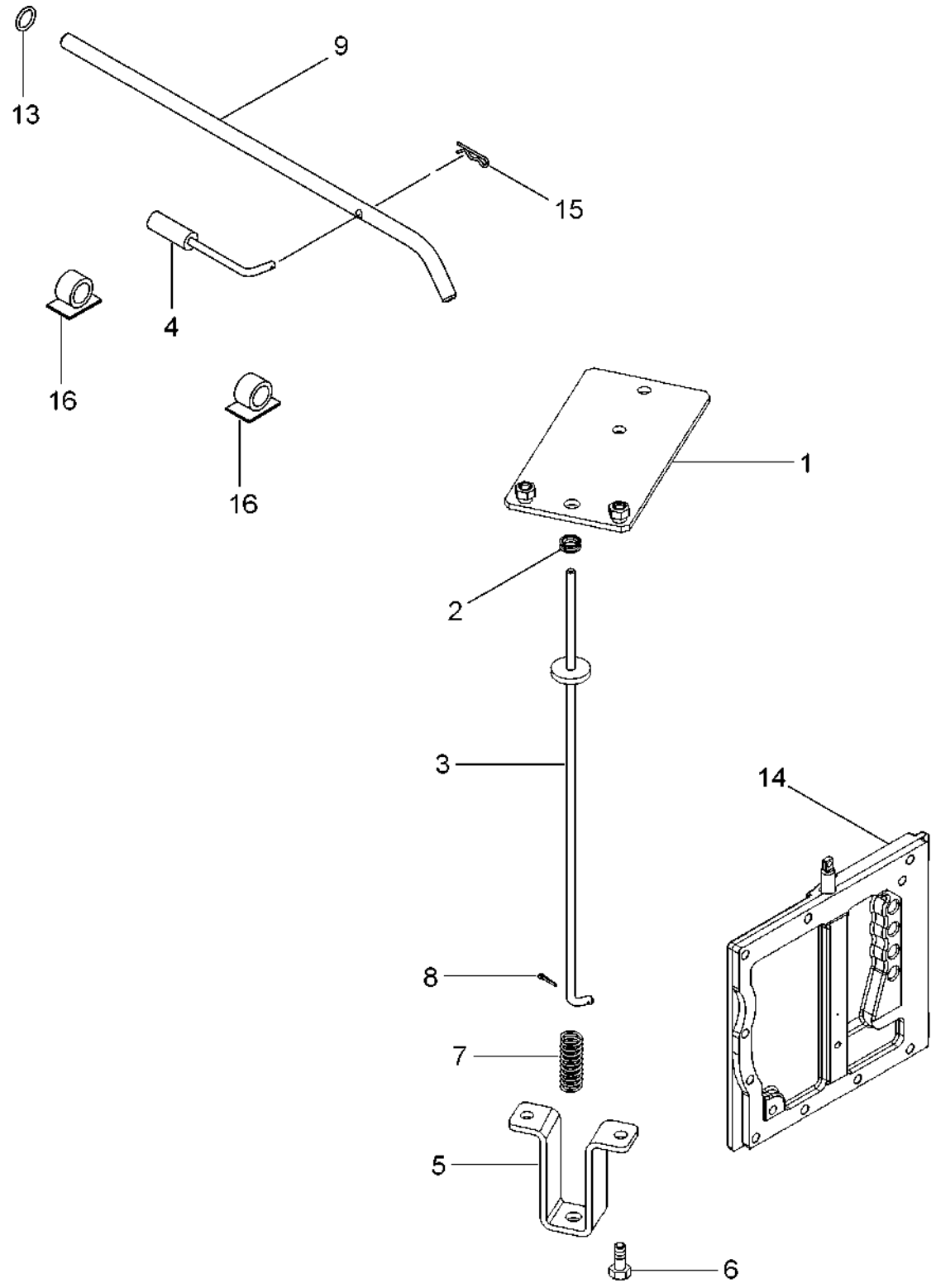

FRENO DE ESTACIONAMIENTO - SOLTAR, BSN AJB0355923
DESENGATE DO TRAVÃO DE ESTACIONAMENTO, BSN AJB0355923
PARKEERREM - VRIJZETTEN, BSN AJB0355923
PARKERINGSBREMSE - SLIP, BSN AJB0355923

R	N	P.N.	MOD	Q	Description Denominacion	Descrizione Denominação	Description Beschrijving	Bezeichnung Beskrivelse	L.C.
1		283465A1		1	PLATE PLACA	PIASTRA CHAPA	PLAQUE PLAAT	PLATTE PLADE	105P
2		248-2164		1	GROMMET 1/4 ID PASACABLES	ANELLO PASSACAVO CASQUILHO ISOLADOR	PASSE-FIL KABELDOORGANG	TÜLLE RING	4020
3		282625A1		1	ROD VARILLA	ASTA HASTE	TRINGLE STANG	STANGE STANG	090A
4		279765A3		1	PISTON EMBOLO	STANTUFFO PISTAO	PISTON ZUIGER	KOLBEN STEMPEL	235S
5		282624A1		1	SUPPORT SOPORTE	SUPPORTO SUPORTE	SUPPORT STEUN	STÜTZE BESLAG	300S
6		627-8020		4	BOLT M8 x 20; 10.9 TORNILLO	BULLONE PARAFUSO	BOULON BOUT	SCHAUBENBOLZEN SKRUE	140B
7		282456A1		1	SPRING RESORTE	MOLLA MOLA	RESSORT VEER	FEDER FJEDER	100M
8		432-48		1	PIN, SPLIT (COTTER) 1/16 x 1/2 PASADOR ABIERTO	COPPIGLIA TROCO DE ABRIR	GOUPILLE SPLITPEN	SPLINT SPLITBOLT	270C
9		279763A2		1	BRAKE LEVER PALANCA FRENO	LEVA, FRENO ALAVANCA DE FREIO	LEVIER DE FREIN BRAKE LEVER	BREMSHEBEL BREMSESTANG	Z538
10		182220A1		1	GROMMET PASACABLES	ANELLO PASSACAVO CASQUILHO ISOLADOR	PASSE-FIL KABELDOORGANG	TÜLLE RING	131A
11		614-8016		2	SCREW M8 x 16; 8.8 TORNILLO	VITE PARAFUSO	VIS SCHROEF	SCHRAUBE SKRUE	P136
12		516-22127		2	CLAMP 1/2 ID COLLAR	MORSETTO BRACADEIRA	COLLIER CLAMP	SCHELLE CLAMP	1640
13		638-53160		1	O-RING 16 ID x 2,65 JUNTA HERMETICA	ANELLO TOROIDALE ANEL O	JOINT TORIQUE O-RING	O-RING O-RING	7176
14	1	445535A2	a	1	PLATE ASSY. PLACA (CONJUNTO)	PIASTRA, COMPLESSIVO PLACA CONJUNTO	PLAQUE (ASSEMBLEE) PLATE ASSY.	PLATTE (KPLT.) PLATE ASSY.	P433
14	1	87433653	b	1	PLATE ASSY. PLACA (CONJUNTO)	PIASTRA, COMPLESSIVO PLACA CONJUNTO	PLAQUE (ASSEMBLEE) PLATE ASSY.	PLATTE (KPLT.) PLATE ASSY.	P433
15		136-159		1	PIN 3/16 x 1-27/64 PERNO	PERNO PERNO	AXE PEN	BOLZEN STIFT	080P
16		169850C2		2	ANCHOR FIJACION	ANCORAGGIO FIXADOR	PIECE DE FIXATION ANKER	VERANKERUNG ANKER	0120

(1) See Figure 06-06
(a) BSN AJB0304805
(b) ASN AJB0304805

07-12		p1	11/04

PARK BRAKE - RELEASE, ASN AJB0355923
FRENO DI STAZIONAMENTO - RILASCIO, ASN AJB0355923
FREIN DE STATIONNEMENT - DESSERRAGE, ASN AJB0355923
FESTSTELLBREMSEN-ENTRIEGELUNG, ASN AJB0355923

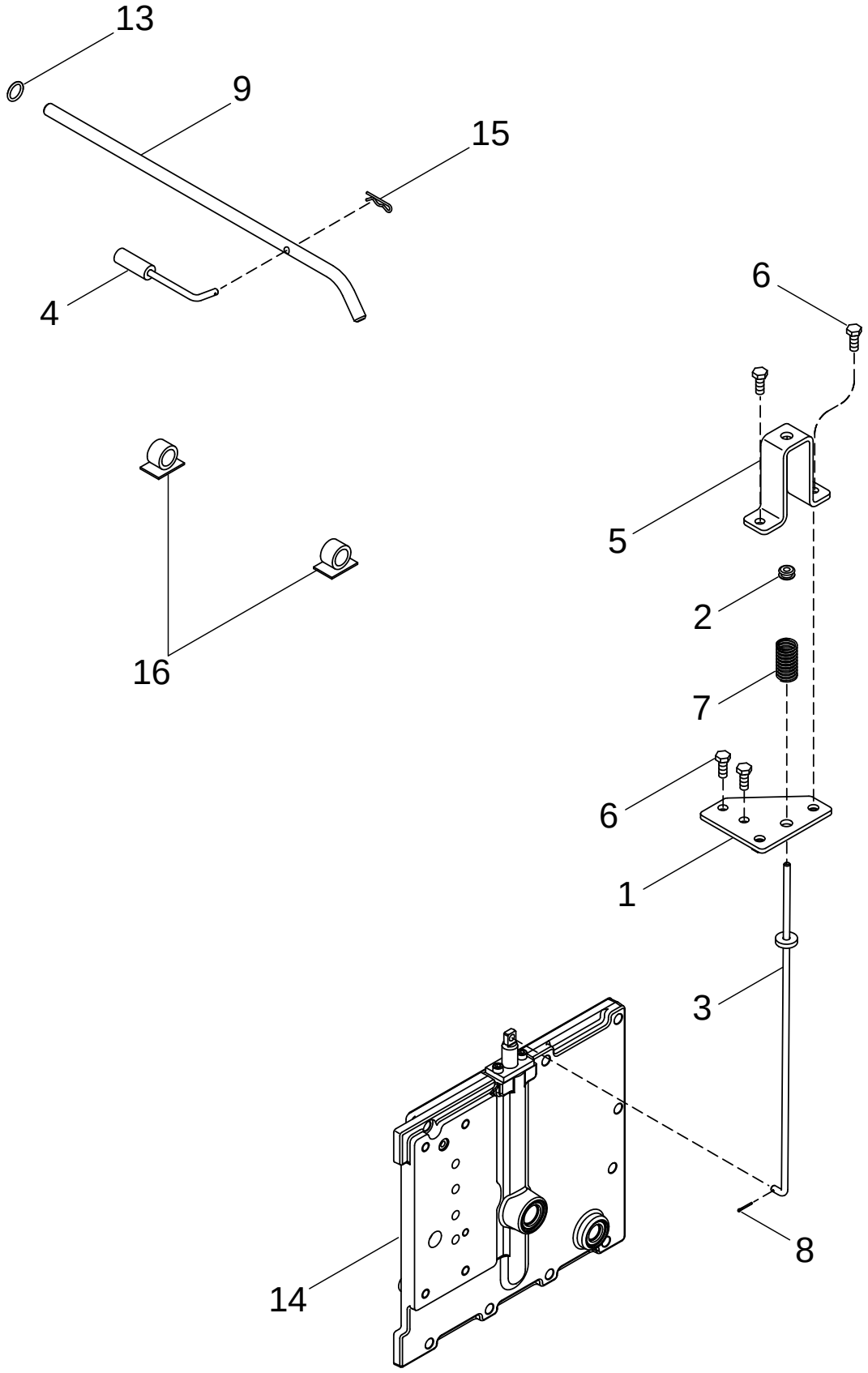

FRENO DE ESTACIONAMIENTO - SOLTAR, ASN AJB0355923
DESENGATE DO TRAVÃO DE ESTACIONAMENTO, ASN AJB0355923
PARKEERREM - VRIJZETTEN, ASN AJB0355923
PARKERINGSBREMSE - SLIP, BSN AJB0355923

R	N	P.N.	MOD	Q	Description Denominacion	Descrizione Denominação	Description Beschrijving	Bezeichnung Beskrivelse	L.C.
1		87435703		1	PLATE PLACA	PIASTRA CHAPA	PLAQUE PLAAT	PLATTE PLADE	105P
2		248-2164		1	GROMMET 1/4 ID PASACABLES	ANELLO PASSACAVO CASQUILHO ISOLADOR	PASSE-FIL KABELDOORGANG	TÜLLE RING	4020
3		87440038		1	ROD VARILLA	ASTA HASTE	TRINGLE STANG	STANGE STANG	090A
4		279765A3		1	PISTON EMBOLO	STANTUFFO PISTAO	PISTON ZUIGER	KOLBEN STEMPEL	235S
5		282624A1		1	SUPPORT SOPORTE	SUPPORTO SUPORTE	SUPPORT STEUN	STÜTZE BESLAG	300S
6		627-8020		4	BOLT M8 x 20; 10.9 TORNILLO	BULLONE PARAFUSO	BOULON BOUT	SCHAUBENBOLZEN SKRUE	140B
7		282456A1		1	SPRING RESORTE	MOLLA MOLA	RESSORT VEER	FEDER FJEDER	100M
8		432-48		1	PIN, SPLIT (COTTER) 1/16 x 1/2 PASADOR ABIERTO	COPPIGLIA TROCO DE ABRIR	GOUPILLE SPLITPEN	SPLINT SPLITBOLT	270C
9		279763A2		1	BRAKE LEVER Release PALANCA FRENO	LEVA, FRENO ALAVANCA DE FREIO	LEVIER DE FREIN BRAKE LEVER	BREMSHEBEL BREMSESTANG	Z538
13		638-53160		1	O-RING 16 ID x 2,65 JUNTA HERMETICA	ANELLO TOROIDALE ANEL O	JOINT TORIQUE O-RING	O-RING O-RING	7176
14	1	87433653		1	PLATE ASSY. PLACA (CONJUNTO)	PIASTRA, COMPLESSIVO PLACA CONJUNTO	PLAQUE (ASSEMBLEE) PLATE ASSY.	PLATTE (KPLT.) PLATE ASSY.	P433
15		136-159		1	PIN 3/16 x 1-27/64 PERNO	PERNO PERNO	AXE PEN	BOLZEN STIFT	080P
16		169850C2		2	ANCHOR FIJACION	ANCORAGGIO FIXADOR	PIECE DE FIXATION ANKER	VERANKERUNG ANKER	0120

(1) See Figure 06-06

07-13		p1	11/04

TRAILER BRAKES - HYDRAULIC, EXCEPT ITALY
FRENI DEL RIMORCHIO - IDRAULICI, TRANNE CHE PER L'ITALIA
FREINS DE REMORQUE HYDRAULIQUES, SAUF ITALIE
HYDRAULISCHE ANHÄNGERBREMSEN (AUSSER ITALIEN)

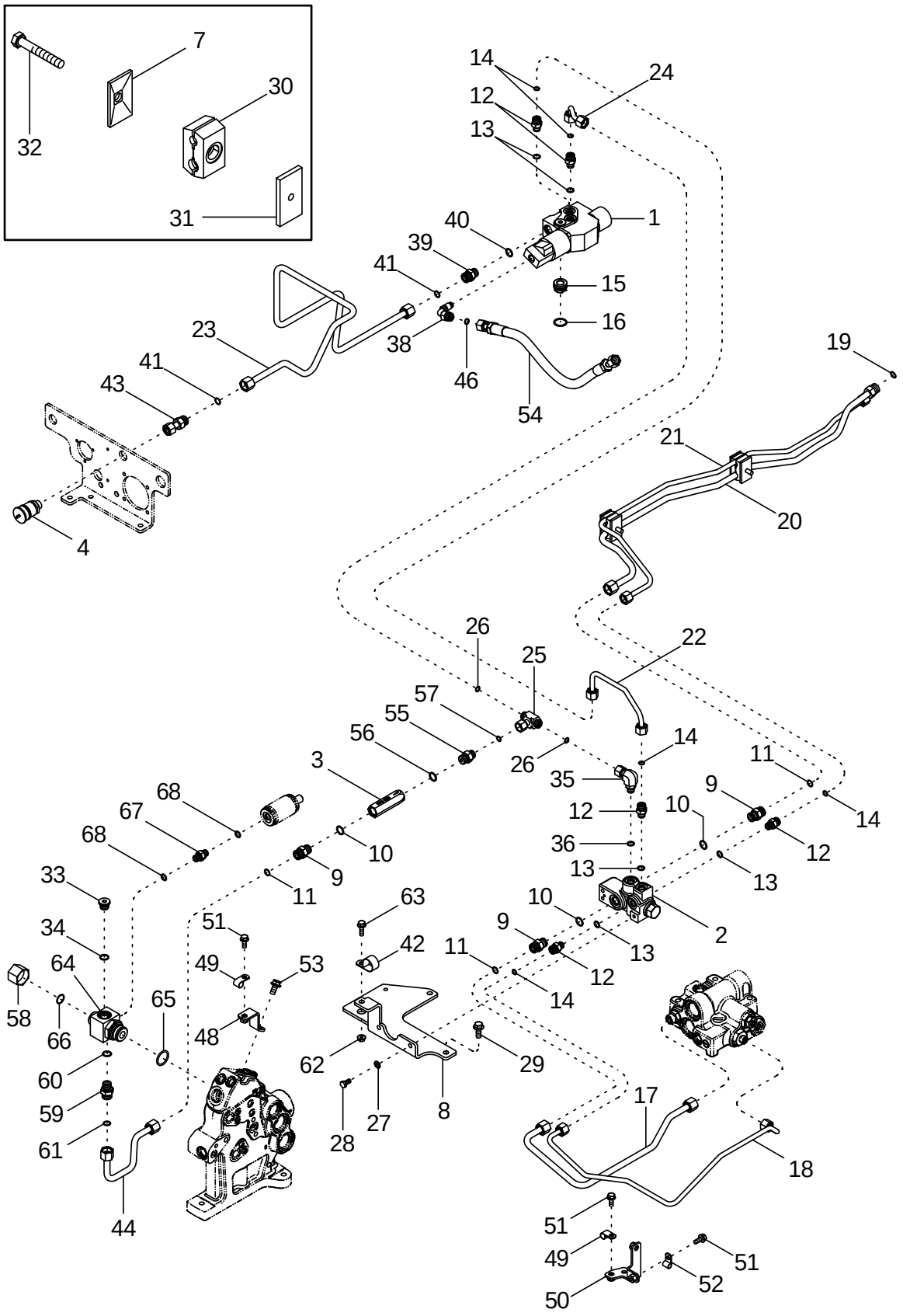

TRAVÕES DO REBOQUE HIDRÁULICO, EXCEPTO NA ITÁLIA
TRAVÕES DO REBOQUE HIDRÁULICO, EXCEPTO NA ITÁLIA
OPLEGGERREMMEN - HYDRAULISCH, BEHALVE ITALIË
ANHÆNGERBREMSER - HYDRAULISKE, UNDTAGEN ITALIEN

R	N	P.N.	MOD	Q	Description Denominacion	Descrizione Denominação	Description Beschrijving	Bezeichnung Beskrivelse	L.C.
1		86991384		1	VALVE Trailer Brake VALVULA	VALVOLA VALVULA	VALVE VALVE	VENTIL VALVE	P468
2		1533774C2		1	VALVE Priority VALVULA	VALVOLA VALVULA	VALVE VALVE	VENTIL VALVE	P468
3		1348540C1		1	VALVE, CHECK Check VALVULA DE CIERRE	VALVOLA, DI RITEGNO VALVULA CHECAGEM	CLAPET ANTI-RETOUR INZETSTUK	RÜCKSCHLAGVENTIL KONTRAVENTIL	P394
4		3131463R91		1	COUPLING, BREAK AWAY ACOPLAMIENTO	ATTACCO, CONTROFAS ACOPLAMENTO	ACCOUPLEMENT HYDR. COUPLING, BREAK AWA	ABREISSKUPPLUNG COUPLING, BREAK AWA	2220
7		384870A1		2	PLATE PLACA	PIASTRA CHAPA	PLAQUE PLAAT	PLATTE PLADE	105P
8		87403709		1	BRACKET PIEZA DE SOPORTE	STAFFA BRACADEIRA	PATTE FIXATION STEUNBEUGEL	HALTERUNG BESLAG	225S
9		201-102		3	ADAPTER 13/16 fc sl x 3/4 Or, Inc. 10, 11 ADAPTOR	ADATTATORE ADAPTADOR	ADAPTEUR VERLOOPSTUK	ADAPTER ADAPTER	0031
10		237-6008		1	O-RING 41/64 ID x 3/32 JUNTA HERMETICA	ANELLO TOROIDALE O-RING	JOINT THORIQUE O-RING	DICHTRING O-RING	055A
11		238-6014		1	O-RING 1/2 ID x 1/16 JUNTA HERMETICA	ANELLO TOROIDALE ANEL O	JOINT TORIQUE O-RING	O-RING O-RING	7176
12		201-101		5	CONNECTION 11/16 fc sl x 9/16 Or, Inc. 13, 14 TERMINAL	CONNETTORE CONECTOR	CONNEXION CONNECTION	VERBINDUNG CONNECTION	P154
13		237-6006		1	O-RING 15/32 ID x 5/64 JUNTA HERMETICA	ANELLO TOROIDALE O-RING	JOINT THORIQUE O-RING	DICHTRING O-RING	055A
14		238-6012		1	O-RING 3/8 ID x 1/16 JUNTA HERMETICA	ANELLO TOROIDALE ANEL O	JOINT TORIQUE O-RING	O-RING O-RING	7176
15		434093A1		1	ADAPTER Inc. 16 ADAPTOR	ADATTATORE ADAPTOR	ADAPTEUR VERLOOPSTUK	ADAPTER ADAPTER	001A
16		238-5119		1	O-RING 15/16 ID x 3/32 JUNTA HERMETICA	ANELLO TOROIDALE ANEL O	JOINT TORIQUE O-RING	O-RING O-RING	7176
17		86985133		1	TUBE ASSY. Steering Supply TUBO (CONJUNTO)	TUBO, COMPLESSIVO TUBO CONJUNTO	TUYAUTERIE TUBE ASSY.	ROHRLEITUNG TUBE ASSY.	P465
18		451058A1		1	TUBE ASSY. Steering Sensor TUBO (CONJUNTO)	TUBO, COMPLESSIVO TUBO CONJUNTO	TUYAUTERIE TUBE ASSY.	ROHRLEITUNG TUBE ASSY.	P465
19		238-6014		1	O-RING 1/2 ID x 1/16 JUNTA HERMETICA	ANELLO TOROIDALE ANEL O	JOINT TORIQUE O-RING	O-RING O-RING	7176
20		433945A1		1	TUBE ASSY. Steering Supply TUBO (CONJUNTO)	TUBO, COMPLESSIVO TUBO CONJUNTO	TUYAUTERIE TUBE ASSY.	ROHRLEITUNG TUBE ASSY.	P465
21		433946A1		1	TUBE ASSY. Steering Sensor TUBO (CONJUNTO)	TUBO, COMPLESSIVO TUBO CONJUNTO	TUYAUTERIE TUBE ASSY.	ROHRLEITUNG TUBE ASSY.	P465
22		434000A1		1	TUBE ASSY. Trailer Brake Pilot TUBO (CONJUNTO)	TUBO, COMPLESSIVO TUBO CONJUNTO	TUYAUTERIE TUBE ASSY.	ROHRLEITUNG TUBE ASSY.	P465

07-13		p2	11/04

TRAILER BRAKES - HYDRAULIC, EXCEPT ITALY
FRENI DEL RIMORCHIO - IDRAULICI, TRANNE CHE PER L'ITALIA
FREINS DE REMORQUE HYDRAULIQUES, SAUF ITALIE
HYDRAULISCHE ANHÄNGERBREMSEN (AUSSER ITALIEN)

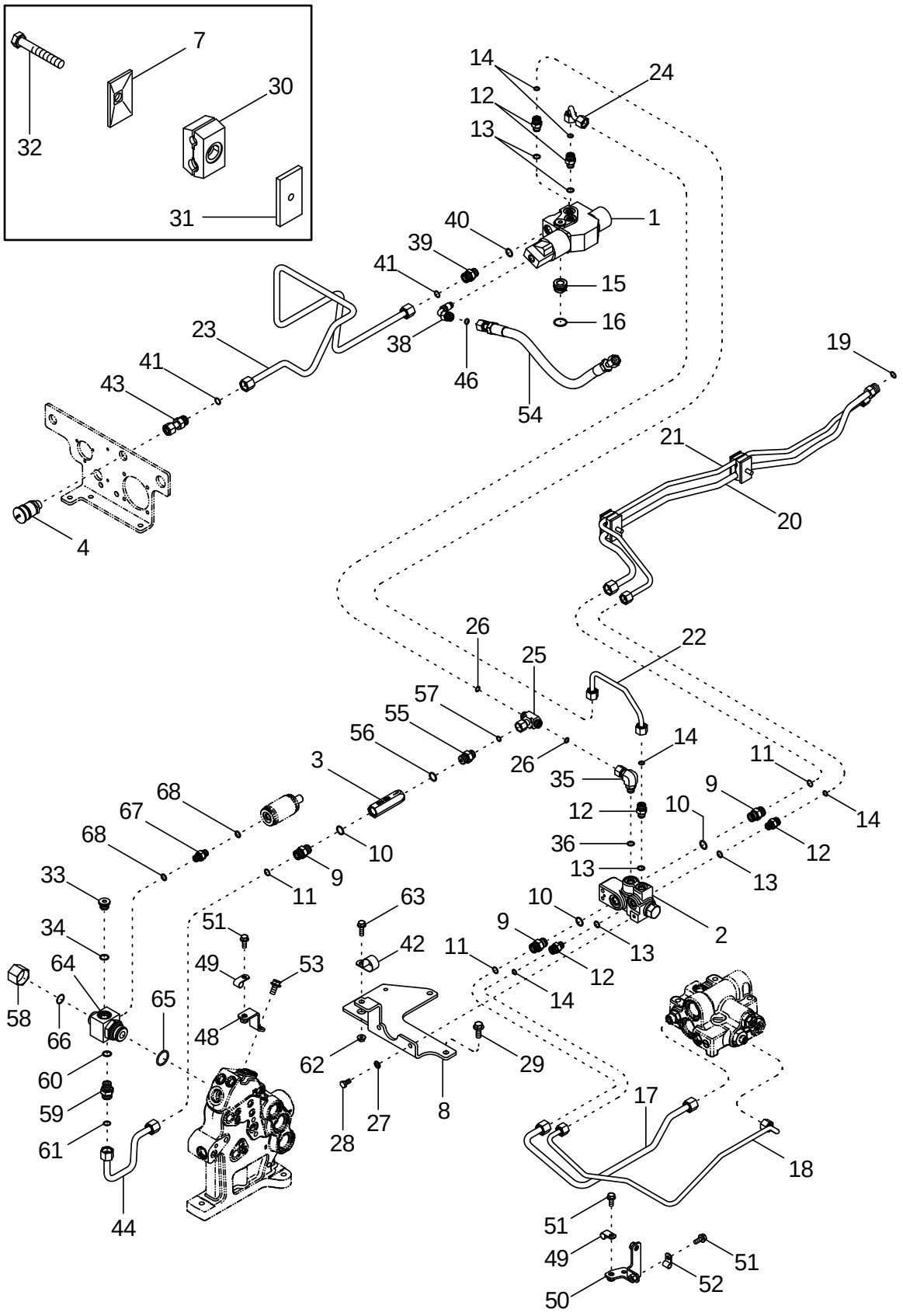

TRAVÕES DO REBOQUE HIDRÁULICO, EXCEPTO NA ITÁLIA
TRAVÕES DO REBOQUE HIDRÁULICO, EXCEPTO NA ITÁLIA
OPLEGGERREMMEN - HYDRAULISCH, BEHALVE ITALIË
ANHÆNGERBREMSER - HYDRAULISKE, UNDTAGEN ITALIEN

R	N	P.N.	MOD	Q	Description Denominacion	Descrizione Denominação	Description Beschrijving	Bezeichnung Beskrivelse	L.C.
23		87410305		1	TUBE ASSY. Trailer Brake Coupler				
						TUBO, COMPLESSIVO	TUYAUTERIE	ROHRLEITUNG	P465
					TUBO (CONJUNTO)	TUBO CONJUNTO	TUBE ASSY.	TUBE ASSY.	
24		87403710		1	TUBE ASSY. Trailer Brake Priority				
						TUBO, COMPLESSIVO	TUYAUTERIE	ROHRLEITUNG	P465
					TUBO (CONJUNTO)	TUBO CONJUNTO	TUBE ASSY.	TUBE ASSY.	
25		201-434		1	TEE 11/16 fc sl x 11/16 sw, Inc. 26				
						PEZZO A T	TE	T-STÜCK	9020
					RACOR-T	TE	TEE	T-STYKKE	
26		237-6012		1	O-RING 59/64 ID x 7/64	ANELLO TOROIDALE	JOINT TORIQUE	O-RING	7176
					JUNTA HERMETICA	ANEL O	O-RING	O-RING	
27		895-11008		2	WASHER 9 x 16 x 1,6 mm	ROSETTA PIANA	RONDELLE	BEILAGSCHEIBE	131R
					ARANDELA	ANILHA	SLUITRING	FLADSKIVE	
28		614-8016		2	SCREW M8 x 16; 8.8	VITE	VIS	SCHRAUBE	P136
					TORNILLO	PARAFUSO	SCHROEF	SKRUE	
29		844-10025		2	SCREW M10 x 25; 8.8	VITE	VIS	SCHRAUBE	P136
					TORNILLO	PARAFUSO	SCHROEF	SKRUE	
30		363255A1		2	CLAMP	MORSETTO	BRIDE	KLEMME	120M
					BORNE	BORNE	KLEM	SPÆNDEBÅND	
31		384871A1		2	PLATE	PIASTRA	PLAQUE	PLATTE	105P
					PLACA	CHAPA	PLAAT	PLADE	
32		814-8055		2	SCREW M8 x 55; 8.8	VITE	VIS	SCHRAUBE	7450
					TORNILLO	PARAFUSO	SCHROEF	SKRUE	
33		221578A1		1	PLUG Inc. 34	TAPPO	BOUCHON	STOPFEN	050T
					TAPÓN	BUJÃO	PLUG	PROP	
34		637-63153		2	O-RING 15,3 ID x 2,2	ANELLO TOROIDALE	JOINT THORIQUE	DICHTRING	055A
					JUNTA HERMETICA	O-RING	O-RING	O-RING	
35		201-322		1	ELBOW UNION 9/16 Or x 11/16 sw, Inc 36				
						GOMITO	COURBE	KNIESTUECK	Z454
					CURVA	COTOVELO	ELBOW UNION	ELBOW UNION	
36		237-6006		1	O-RING 15/32 ID x 5/64	ANELLO TOROIDALE	JOINT THORIQUE	DICHTRING	055A
					JUNTA HERMETICA	O-RING	O-RING	O-RING	
38		1975290C1		1	ELBOW Brake Supply	GOMITO	COUDE	KNIESTÜCK	085G
					CODO	JOELHO	ELLEBOOG	VINKELROER	
39		1975213C2		1	ADAPTER 13/16 fc sl x 18 Or, Inc. 40, 41				
						ADATTATORE	ADAPTEUR	ADAPTER	001A
					ADAPTOR	ADAPTOR	VERLOOPSTUK	ADAPTER	
40		637-63153		1	O-RING 15,3 ID x 2,2	ANELLO TOROIDALE	JOINT THORIQUE	DICHTRING	055A
					JUNTA HERMETICA	O-RING	O-RING	O-RING	
41		238-6014		1	O-RING 1/2 ID x 1/16	ANELLO TOROIDALE	JOINT TORIQUE	O-RING	7176
					JUNTA HERMETICA	ANEL O	O-RING	O-RING	
42		515-23286		1	CLAMP 1-1/8 ID	MORSETTO	COLLIER	SCHELLE	1640
					COLLAR	BRACADEIRA	CLAMP	CLAMP	
43		1975266C1		1	CONNECTOR, HYD.	RACCORDO IDRAULICO	RACCORD	STUTZEN	020R
					RACOR	CONECTOR	VERBINDING	FORSKRUNING	
44		87403711		1	TUBE ASSY. Trailer Brake Supply				
						TUBO, COMPLESSIVO	TUYAUTERIE	ROHRLEITUNG	P465
					TUBO (CONJUNTO)	TUBO CONJUNTO	TUBE ASSY.	TUBE ASSY.	

TRAILER BRAKES - HYDRAULIC, EXCEPT ITALY
FRENI DEL RIMORCHIO - IDRAULICI, TRANNE CHE PER L'ITALIA
FREINS DE REMORQUE HYDRAULIQUES, SAUF ITALIE
HYDRAULISCHE ANHÄNGERBREMSEN (AUSSER ITALIEN)

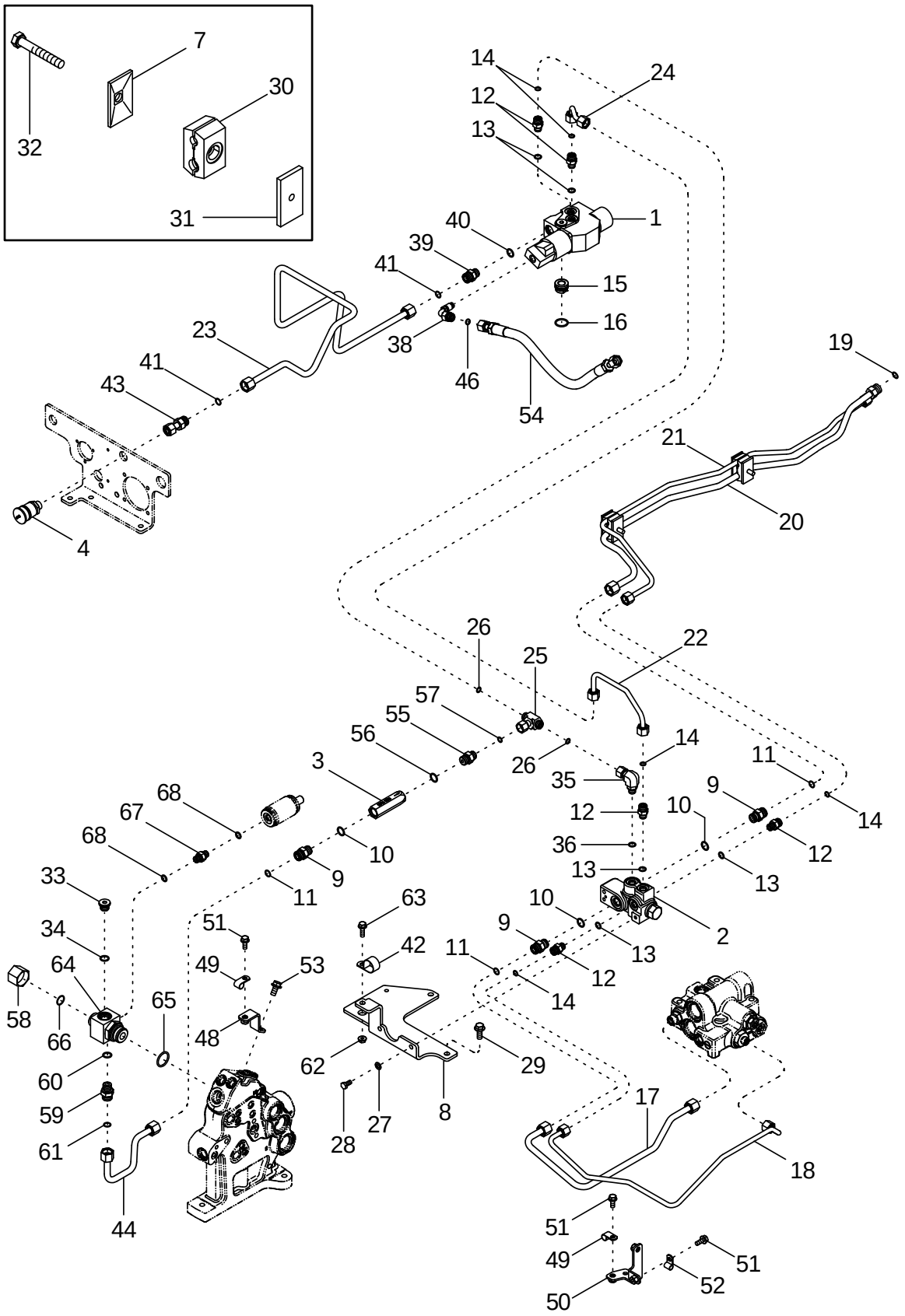

TRAVÕES DO REBOQUE HIDRÁULICO, EXCEPTO NA ITÁLIA
TRAVÕES DO REBOQUE HIDRÁULICO, EXCEPTO NA ITÁLIA
OPLEGGERREMMEN - HYDRAULISCH, BEHALVE ITALIË
ANHÆNGERBREMSER - HYDRAULISKE, UNDTAGEN ITALIEN

R	N	P.N.	MOD	Q	Description Denominacion	Descrizione Denominação	Description Beschrijving	Bezeichnung Beskrivelse	L.C.
48		443761A1		1	BRACKET PIEZA DE SOPORTE	STAFFA BRACADEIRA	PATTE FIXATION STEUNBEUGEL	HALTERUNG BESLAG	225S
49		515-22127		2	CLAMP 1/2 ID COLLAR	MORSETTO BRACADEIRA	COLLIER CLAMP	SCHELLE CLAMP	1640
50		86985131		1	BRACKET PIEZA DE SOPORTE	STAFFA BRACADEIRA	PATTE FIXATION STEUNBEUGEL	HALTERUNG BESLAG	225S
51		844-8020		4	BOLT M8 x 20; 8.8 TORNILLO	BULLONE PARAFUSO	BOULON BOUT	SCHAUBENBOLZEN SKRUE	140B
52		515-2295		1	CLAMP 3/8 ID COLLAR	MORSETTO BRACADEIRA	COLLIER CLAMP	SCHELLE CLAMP	1640
53		844-10020		1	SCREW M10 x 20; 78.8 TORNILLO	VITE PARAFUSO	VIS SCHROEF	SCHRAUBE SKRUE	7450
54		87403804		1	HOSE, FLEXIBLE MANGA FLEXIBLE	TUBO FLESSIBILE TUBO FLEXIVEL	TUYAU FLEXIBLE FLEXIBELE SLANG	SCHLAUCH, FLEXIBEL FLEKSIBEL SLANGE	192T
55		201-106		1	CONNECTOR 11/16 fc sl x 3/4 Or, Inc. 56, 57 CONECTOR	CONNESSIONE CONECTOR	CONNECTEUR VERBINDING	STECKVERBINDUNG ELI STIK	1950
56		237-6008		1	O-RING 41/64 ID x 3/32 JUNTA HERMETICA	ANELLO TOROIDALE O-RING	JOINT THORIQUE O-RING	DICHTRING O-RING	055A
57		238-6012		1	O-RING 3/8 ID x 1/16 JUNTA HERMETICA	ANELLO TOROIDALE ANEL O	JOINT TORIQUE O-RING	O-RING O-RING	7176
58		701-907		1	PLUG 1-3/16 TAPÓN	TAPPO BUJAO	BOUCHON PLUG	STOPFEN PROP	6400
59		700-102		1	CONNECTOR, HYD. 13/13 fc sl x 14 Or, Inc. 60, 61 RACOR	RACCORDO IDRAULICO CONECTOR	RACCORD VERBINDING	STUTZEN FORSKRUNING	020R
60		637-63153		1	O-RING 15,3 ID x 2,2 JUNTA HERMETICA	ANELLO TOROIDALE O-RING	JOINT THORIQUE O-RING	DICHTRING O-RING	055A
61		238-6014		1	O-RING 1/2 ID x 1/16 JUNTA HERMETICA	ANELLO TOROIDALE ANEL O	JOINT TORIQUE O-RING	O-RING O-RING	7176
62		825-2408		1	NUT M8 TUERCA	DADO PORCA	ECROU MOER	MUTTER MØTRIK	5780
63		844-8025		1	SCREW M8 x 25; 8.8 TORNILLO	VITE PARAFUSO	VIS SCHROEF	SCHRAUBE SKRUE	7450
64		87402551		1	TEE Inc. 65, 66 RACOR-T	PEZZO A T TE	TE TEE	T-STÜCK T-STYKKE	9020
65		637-64296		1	O-RING 29,6 ID x 2,9 JUNTA HERMETICA	ANELLO TOROIDALE ANEL O	JOINT TORIQUE O-RING	O-RING O-RING	7176
66		238-6018		1	O-RING 3/4 ID x 1/16 JUNTA HERMETICA	ANELLO TOROIDALE ANEL O	JOINT TORIQUE O-RING	O-RING O-RING	7176
67		87403003		1	CONNECTOR, HYD. 14 Or x 14 Or, Inc. 68 RACOR	RACCORDO IDRAULICO CONECTOR	RACCORD VERBINDING	STUTZEN FORSKRUNING	020R
68		637-63113		2	O-RING 11,3 ID x 2,2 JUNTA HERMETICA	ANELLO TOROIDALE O-RING	JOINT THORIQUE O-RING	DICHTRING O-RING	055A

07-14		p1	11/04

TRAILER BRAKES - HYDRAULIC, ITALY ONLY
FRENI DEL RIMORCHIO - IDRAULICI, SOLO PER L'ITALIA
FREINS DE REMORQUE HYDRAULIQUES, ITALIE UNIQUEMENT
HYDRAULISCHE ANHÄNGERBREMSEN (NUR ITALIEN)

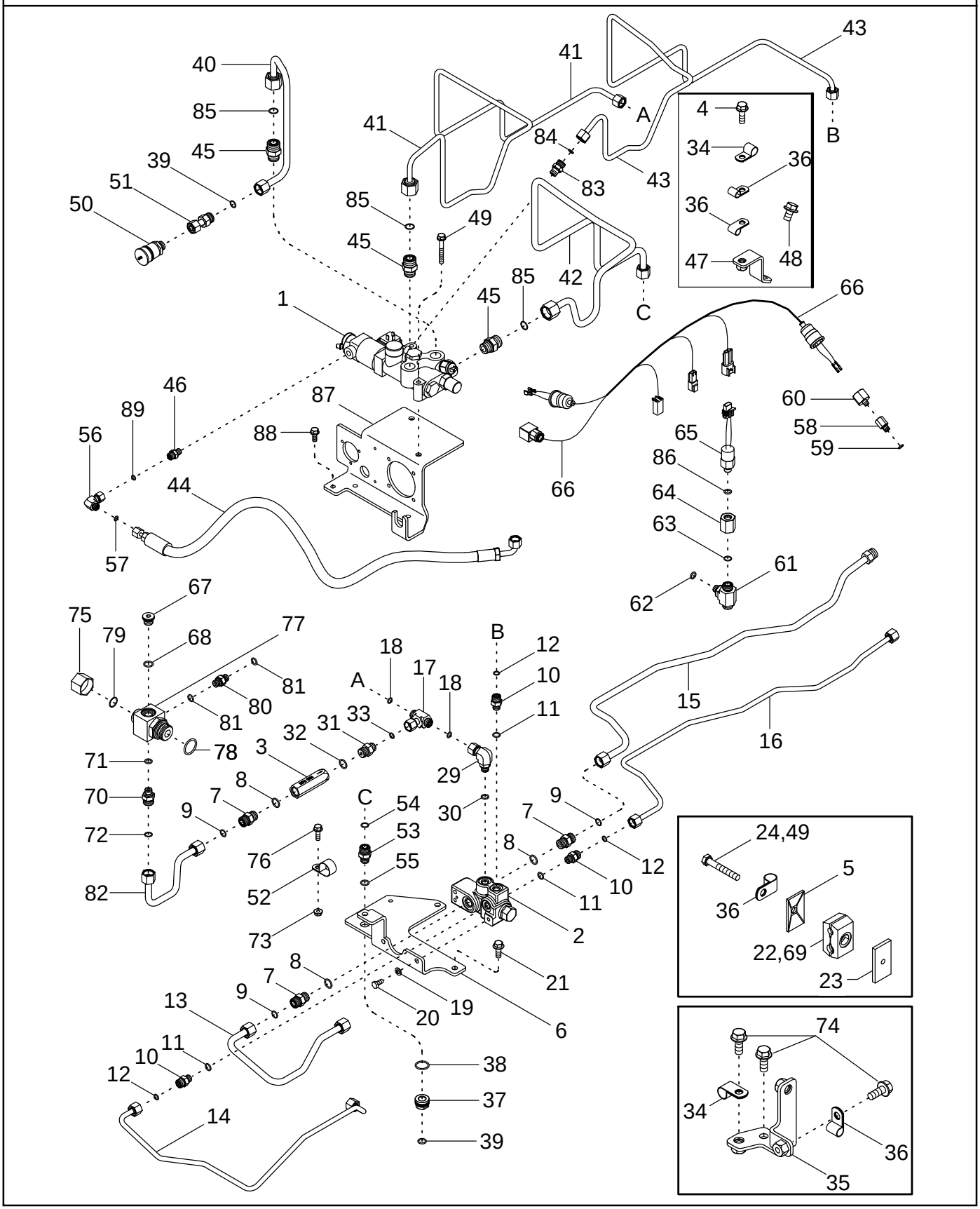

FRENOS DE REMOLQUE - HIDRÁULICOS, SÓLO ITALIA
TRAVÕES DO REBOQUE HIDRÁULICO - APENAS NA ITÁLIA
OPLEGGERREMMEN - HYDRAULISCH, UITSLUITEND ITALIË
ANHÆNGERBREMSER - HYDAULISKE, KUN ITALIEN

R	N	P.N.	MOD	Q	Description Denominacion	Descrizione Denominação	Description Beschrijving	Bezeichnung Beskrivelse	L.C.
1		446347A1		1	VALVE Trailer Brake VALVULA	VALVOLA VALVULA	SOUPAPE VALVE	VENTIL VALVE	9620
2		1533774C2		1	VALVE Priority VALVULA	VALVOLA VALVULA	VALVE VALVE	VENTIL VALVE	P468
3		1348540C1		1	VALVE, CHECK Check VALVULA DE CIERRE	VALVOLA, DI RITEGNO VALVULA CHECAGEM	CLAPET ANTI-RETOUR INZETSTUK	RÜCKSCHLAGVENTIL KONTRAVENTIL	P394
4		844-8025		4	SCREW M8 x 25; 8.8 TORNILLO	VITE PARAFUSO	VIS SCHROEF	SCHRAUBE SKRUE	7450
5		384870A1		3	PLATE PLACA	PIASTRA CHAPA	PLAQUE PLAAT	PLATTE PLADE	105P
6		87403709		1	BRACKET PIEZA DE SOPORTE	STAFFA BRACADEIRA	PATTE FIXATION STEUNBEUGEL	HALTERUNG BESLAG	225S
7		201-102		3	ADAPTER 13/16 fc sl x 3/4 Or, Inc. 8, 9 ADAPTOR	ADATTATORE ADAPTADOR	ADAPTEUR VERLOOPSTUK	ADAPTER ADAPTER	0031
8		237-6008		1	O-RING 41/64 ID x 3/32 JUNTA HERMETICA	ANELLO TOROIDALE O-RING	JOINT THORIQUE O-RING	DICHTRING O-RING	055A
9		238-6014		1	O-RING 1/2 ID x 1/16 JUNTA HERMETICA	ANELLO TOROIDALE ANEL O	JOINT TORIQUE O-RING	O-RING O-RING	7176
10		201-101		3	CONNECTION 11/16 fc sl x 9/16 Or, Inc. 11, 12 TERMINAL	CONNETTORE CONECTOR	CONNEXION CONNECTION	VERBINDUNG CONNECTION	P154
11		237-6006		1	O-RING 15/32 ID x 5/64 JUNTA HERMETICA	ANELLO TOROIDALE O-RING	JOINT THORIQUE O-RING	DICHTRING O-RING	055A
12		238-6012		1	O-RING 3/8 ID x 1/16 JUNTA HERMETICA	ANELLO TOROIDALE ANEL O	JOINT TORIQUE O-RING	O-RING O-RING	7176
13		86985133		1	TUBE ASSY. Steering Supply TUBO (CONJUNTO)	TUBO, COMPLESSIVO TUBO CONJUNTO	TUYAUTERIE TUBE ASSY.	ROHRLEITUNG TUBE ASSY.	P465
14		451058A1		1	TUBE ASSY. Steering Sensor TUBO (CONJUNTO)	TUBO, COMPLESSIVO TUBO CONJUNTO	TUYAUTERIE TUBE ASSY.	ROHRLEITUNG TUBE ASSY.	P465
15		433945A1		1	TUBE ASSY. Steering Supply TUBO (CONJUNTO)	TUBO, COMPLESSIVO TUBO CONJUNTO	TUYAUTERIE TUBE ASSY.	ROHRLEITUNG TUBE ASSY.	P465
16		433946A1		1	TUBE ASSY. Steering Sensor TUBO (CONJUNTO)	TUBO, COMPLESSIVO TUBO CONJUNTO	TUYAUTERIE TUBE ASSY.	ROHRLEITUNG TUBE ASSY.	P465
17		201-434		1	TEE 11/16 fc sl x 11/16 sw, Inc. 18 RACOR-T	PEZZO A T TE	TE TEE	T-STÜCK T-STYKKE	9020
18		238-6012		2	O-RING 3/8 ID x 1/16 JUNTA HERMETICA	ANELLO TOROIDALE ANEL O	JOINT TORIQUE O-RING	O-RING O-RING	7176
19		895-11008		2	WASHER 9 x 16 x 1,6 mm ARANDELA	ROSETTA PIANA ANILHA	RONDELLE SLUITRING	BEILAGSCHEIBE FLADSKIVE	131R
20		614-8016		2	SCREW M8 x 16; 8,8 TORNILLO	VITE PARAFUSO	VIS SCHROEF	SCHRAUBE SKRUE	P136
21		844-10025		2	SCREW M10 x 20; 8.8 TORNILLO	VITE PARAFUSO	VIS SCHROEF	SCHRAUBE SKRUE	P136

TRAILER BRAKES - HYDRAULIC, ITALY ONLY
FRENI DEL RIMORCHIO - IDRAULICI, SOLO PER L'ITALIA
FREINS DE REMORQUE HYDRAULIQUES, ITALIE UNIQUEMENT
HYDRAULISCHE ANHÄNGERBREMSEN (NUR ITALIEN)

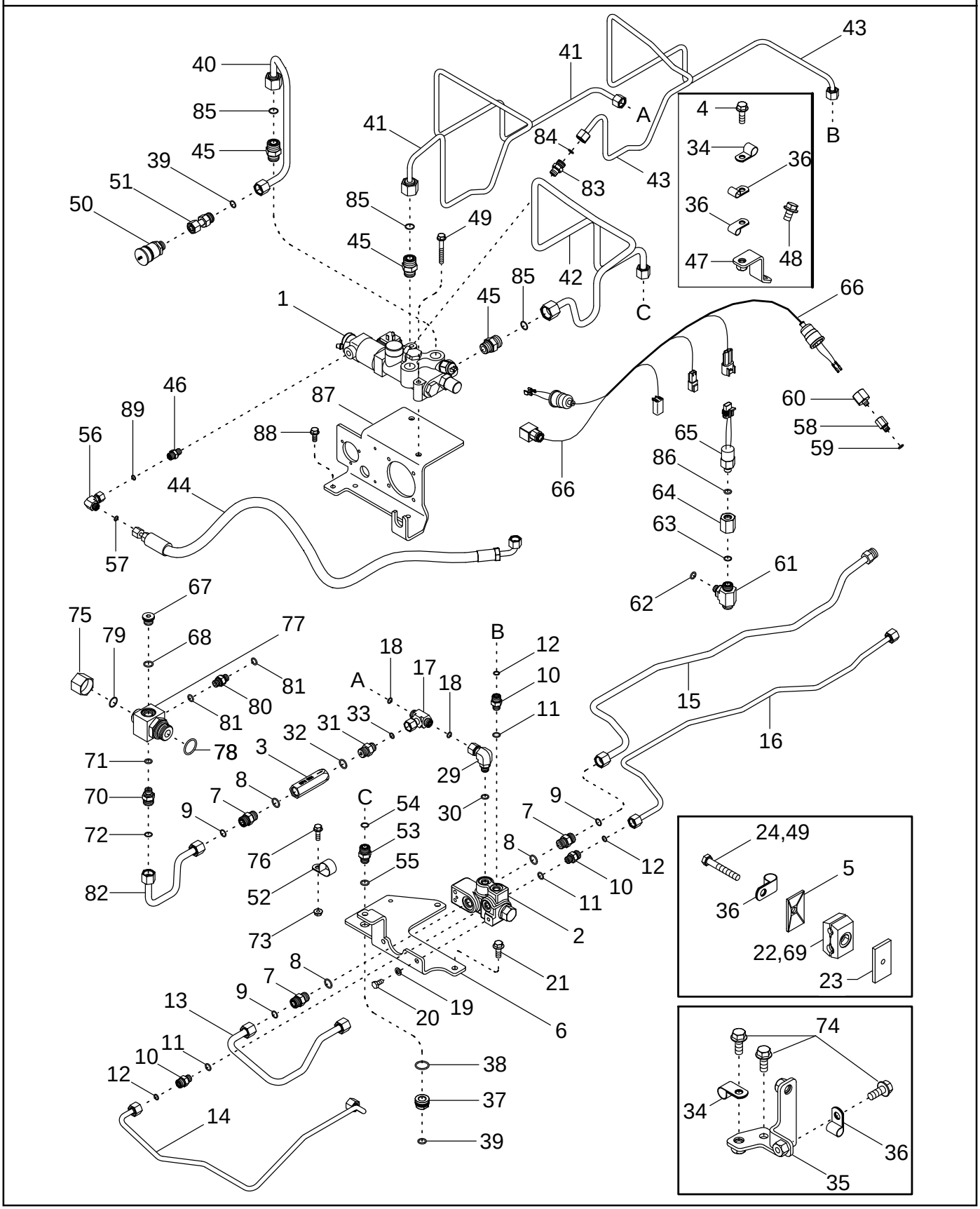

FRENOS DE REMOLQUE - HIDRÁULICOS, SÓLO ITALIA
TRAVÕES DO REBOQUE HIDRÁULICO - APENAS NA ITÁLIA
OPLEGGERREMMEN - HYDRAULISCH, UITSLUITEND ITALIË
ANHÆNGERBREMSER - HYDAULISKE, KUN ITALIEN

R	N	P.N.	MOD	Q	Description Denominacion	Descrizione Denominação	Description Beschrijving	Bezeichnung Beskrivelse	L.C.
22		363255A1		2	CLAMP BORNE	MORSETTO BORNE	BRIDE KLEM	KLEMME SPÆNDEBÅND	120M
23		384871A1		3	PLATE PLACA	PIASTRA CHAPA	PLAQUE PLAAT	PLATTE PLADE	105P
24		814-8055		2	SCREW M8 x 55; 8,8 TORNILLO	VITE PARAFUSO	VIS SCHROEF	SCHRAUBE SKRUE	7450
29		201-322		1	ELBOW UNION 9/16 Or x 11/16 sw, Inc. 30 CURVA	GOMITO COTOVELO	COURBE ELBOW UNION	KNIESTUECK ELBOW UNION	Z454
30		237-6006		1	O-RING 15/32 ID x x 5/64 JUNTA HERMETICA	ANELLO TOROIDALE O-RING	JOINT THORIQUE O-RING	DICHTRING O-RING	055A
31		201-106		1	CONNECTOR 11/16 fc sl x 3/4 Or, Inc. 32, 33 CONECTOR	CONNESSIONE CONECTOR	CONNECTEUR VERBINDING	STECKVERBINDUNG ELI STIK	1950
32		237-6008		1	O-RING 41/64 ID x 3/32 JUNTA HERMETICA	ANELLO TOROIDALE O-RING	JOINT THORIQUE O-RING	DICHTRING O-RING	055A
33		238-6012		1	O-RING 3/8 ID x 1/16 JUNTA HERMETICA	ANELLO TOROIDALE ANEL O	JOINT TORIQUE O-RING	O-RING O-RING	7176
34		515-22127		2	CLAMP 1/2 ID COLLAR	MORSETTO BRACADEIRA	COLLIER CLAMP	SCHELLE CLAMP	1640
35		86985131		1	BRACKET PIEZA DE SOPORTE	STAFFA BRACADEIRA	PATTE FIXATION STEUNBEUGEL	HALTERUNG BESLAG	225S
36		515-2295		4	CLAMP 3/8 ID COLLAR	MORSETTO BRACADEIRA	COLLIER CLAMP	SCHELLE CLAMP	1640
37		434093A1		1	ADAPTER Inc. 38, 39 ADAPTOR	ADATTATORE ADAPTOR	ADAPTEUR VERLOOPSTUK	ADAPTER ADAPTER	001A
38		238-5119		1	O-RING 15/16 ID x 3/32 JUNTA HERMETICA	ANELLO TOROIDALE ANEL O	JOINT TORIQUE O-RING	O-RING O-RING	7176
39		238-6014		1	O-RING 1/2 ID x 1/16 JUNTA HERMETICA	ANELLO TOROIDALE ANEL O	JOINT TORIQUE O-RING	O-RING O-RING	7176
40		448524A1		1	TUBE ASSY. TUBO (CONJUNTO)	TUBO, COMPLESSIVO TUBO CONJUNTO	TUYAUTERIE TUBE ASSY.	ROHRLEITUNG TUBE ASSY.	P465
41		87403712		1	TUBE ASSY. Trailer Brake Supply TUBO (CONJUNTO)	TUBO, COMPLESSIVO TUBO CONJUNTO	TUYAUTERIE TUBE ASSY.	ROHRLEITUNG TUBE ASSY.	P465
42		87403713		1	TUBE ASSY. Trailer Brake Return TUBO (CONJUNTO)	TUBO, COMPLESSIVO TUBO CONJUNTO	TUYAUTERIE TUBE ASSY.	ROHRLEITUNG TUBE ASSY.	P465
43		448527A1		1	TUBE ASSY. Trailer Brake Sensor TUBO (CONJUNTO)	TUBO, COMPLESSIVO TUBO CONJUNTO	TUYAUTERIE TUBE ASSY.	ROHRLEITUNG TUBE ASSY.	P465
44		86985790		1	HOSE MANGA	MANICOTTO FLESSIBILE TUBO FLEXIVEL	FLEXIBLE FLEXIBELE BUIS	SCHLAUCH SLANGE	030M
45		448548A1		3	CONNECTOR, HYD. RACOR	RACCORDO IDRAULICO CONECTOR	RACCORD VERBINDING	STUTZEN FORSKRUNING	020R
46		86985788		1	CONNECTOR, HYD. RACOR	RACCORDO IDRAULICO CONECTOR	RACCORD VERBINDING	STUTZEN FORSKRUNING	020R
47		443761A1		1	BRACKET PIEZA DE SOPORTE	STAFFA BRACADEIRA	PATTE FIXATION STEUNBEUGEL	HALTERUNG BESLAG	225S

TRAILER BRAKES - HYDRAULIC, ITALY ONLY
FRENI DEL RIMORCHIO - IDRAULICI, SOLO PER L'ITALIA
FREINS DE REMORQUE HYDRAULIQUES, ITALIE UNIQUEMENT
HYDRAULISCHE ANHÄNGERBREMSEN (NUR ITALIEN)

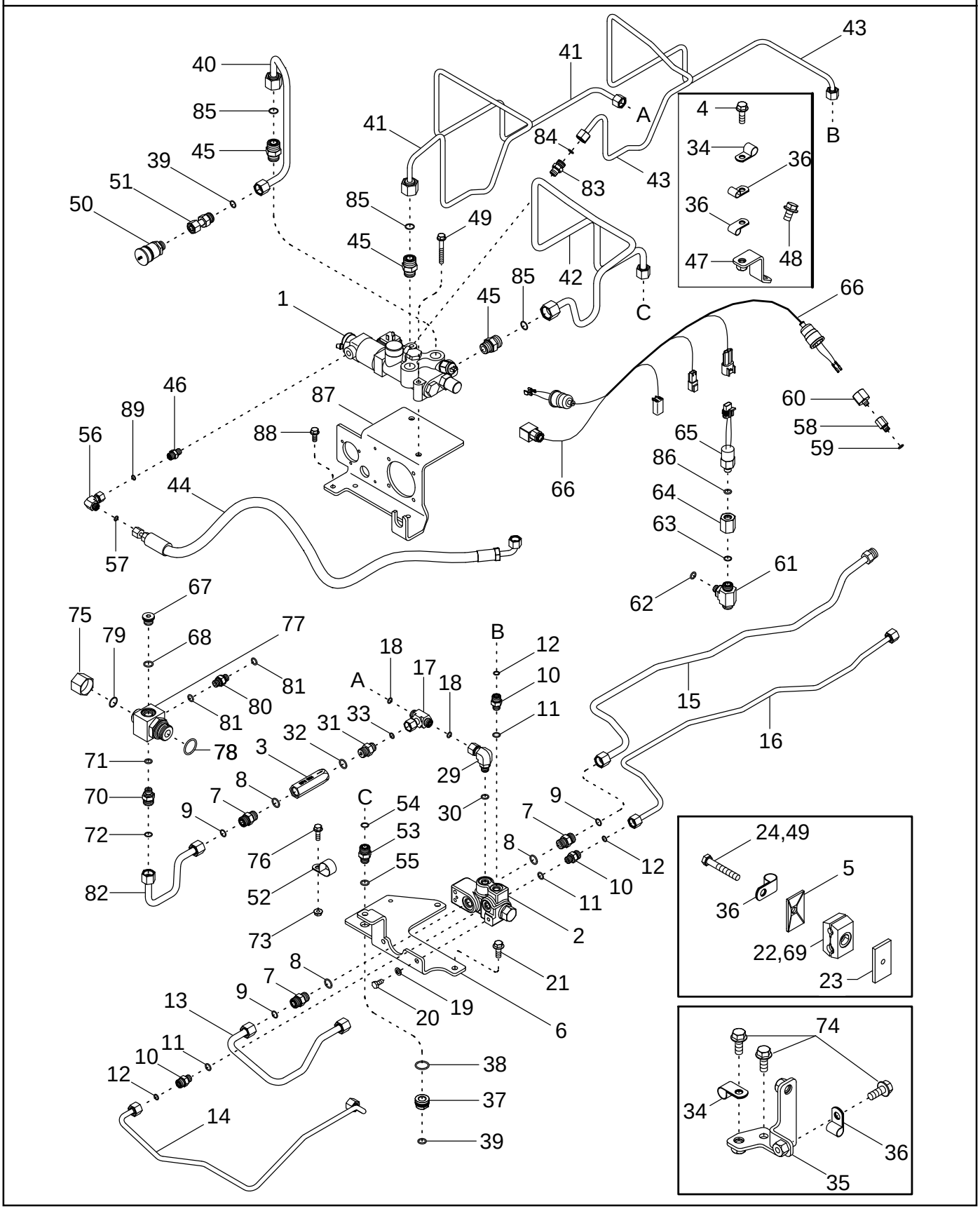

FRENOS DE REMOLQUE - HIDRÁULICOS, SÓLO ITALIA
TRAVÕES DO REBOQUE HIDRÁULICO - APENAS NA ITÁLIA
OPLEGGERREMMEN - HYDRAULISCH, UITSLUITEND ITALIË
ANHÆNGERBREMSER - HYDAULISKE, KUN ITALIEN

R	N	P.N.	MOD	Q	Description Denominacion	Descrizione Denominação	Description Beschrijving	Bezeichnung Beskrivelse	L.C.
48		844-10016		1	SCREW M10 x 16; 8.8 TORNILLO	VITE PARAFUSO	VIS SCHROEF	SCHRAUBE SKRUE	7450
49		844-8060		3	SCREW M8 x 60; 8.8 TORNILLO	VITE PARAFUSO	VIS SCHROEF	SCHRAUBE SKRUE	7450
50		3131463R91		1	COUPLING, BREAK AWAY ACOPLAMIENTO	ATTACCO, CONTROFAS ACOPLAMENTO	ACCOUPLEMENT HYDR. COUPLING, BREAK AWA	ABREISSKUPPLUNG COUPLING, BREAK AWA	2220
51		1975266C1		1	CONNECTOR, HYD. RACOR	RACCORDO IDRAULICO CONECTOR	RACCORD VERBINDING	STUTZEN FORSKRUNING	020R
52		515-23286		1	CLAMP 1-1/8 ID COLLAR	MORSETTO BRACADEIRA	COLLIER CLAMP	SCHELLE CLAMP	1640
53		700-169		1	CONNECTOR, HYD. 13/16 fc sl x 16 Or, Inc. 54, 55 RACOR	RACCORDO IDRAULICO CONECTOR	RACCORD VERBINDING	STUTZEN FORSKRUNING	020R
54		238-6014		1	O-RING 1/2 ID x 1/16 JUNTA HERMETICA	ANELLO TOROIDALE ANEL O	JOINT TORIQUE O-RING	O-RING O-RING	7176
55		637-63133		1	O-RING 13,3 ID x 2,2 JUNTA HERMETICA	ANELLO TOROIDALE ANEL O	JOINT TORIQUE O-RING	O-RING O-RING	7176
56		201-329		1	FITTING 9/16 fc sl x 9/16 sw, Inc. 57 CONEXION	RACCORDO CONEXAO	RACCORD FITTING	ANSCHLUSSSTÜCK FITTING	3300
57		238-6011		1	O-RING 5/16 ID x 1/16 JUNTA HERMETICA	ANELLO TOROIDALE ANEL O	JOINT TORIQUE O-RING	O-RING O-RING	7176
58		87403625		1	ADAPTER Inc. 59 ADAPTOR	ADATTATORE ADAPTOR	ADAPTEUR VERLOOPSTUK	ADAPTER ADAPTER	001A
59		237-6004		1	O-RING 23/64 ID x 5/64 JUNTA HERMETICA	ANELLO TOROIDALE ANEL O	JOINT TORIQUE O-RING	O-RING O-RING	7176
60		87406506		1	SWITCH, PRESSURE INTERRUPTOR DE PRES	INTERRUTTORE PRESSI INTERRUPTOR DE PRES	PRESSOSTAT DRUKSCHAKELAAR	DRUCKSCHALTER TRYKKONTAKT	079I
61		700-443		1	TEE 13/16 fc sl x x 14 Or, Inc. 62, 63 RACOR-T	PEZZO A T TE	TE TEE	T-STÜCK T-STYKKE	9020
62		637-63113		1	O-RING 11,3 ID x 2,2 JUNTA HERMETICA	ANELLO TOROIDALE O-RING	JOINT THORIQUE O-RING	DICHTRING O-RING	055A
63		238-6014		1	O-RING 1/2 ID x 1/16 JUNTA HERMETICA	ANELLO TOROIDALE ANEL O	JOINT TORIQUE O-RING	O-RING O-RING	7176
64		86989146		1	ADAPTER ADAPTOR	ADATTATORE ADAPTOR	ADAPTEUR VERLOOPSTUK	ADAPTER ADAPTER	001A
65		87401139		1	SWITCH, PRESSURE INTERRUPTOR DE PRES	INTERRUTTORE PRESSI INTERRUPTOR DE PRES	PRESSOSTAT DRUKSCHAKELAAR	DRUCKSCHALTER TRYKKONTAKT	079I
66		87409357		1	HARNESS HAZ	CABLAGGIO CHICOTE	FAISCEAU HARNESS	KABELSTRANG HARNESS	4160
67		221578A1		1	PLUG M18, Inc. 68 TAPÓN	TAPPO BUJÃO	BOUCHON PLUG	STOPFEN PROP	050T
68		637-63153		1	O-RING 15,3 ID x 2,2 JUNTA HERMETICA	ANELLO TOROIDALE O-RING	JOINT THORIQUE O-RING	DICHTRING O-RING	055A
69		410573A1		1	CLAMP BORNE	MORSETTO BORNE	BRIDE KLEM	KLEMME SPÆNDEBÅND	120M

TRAILER BRAKES - HYDRAULIC, ITALY ONLY
FRENI DEL RIMORCHIO - IDRAULICI, SOLO PER L'ITALIA
FREINS DE REMORQUE HYDRAULIQUES, ITALIE UNIQUEMENT
HYDRAULISCHE ANHÄNGERBREMSEN (NUR ITALIEN)

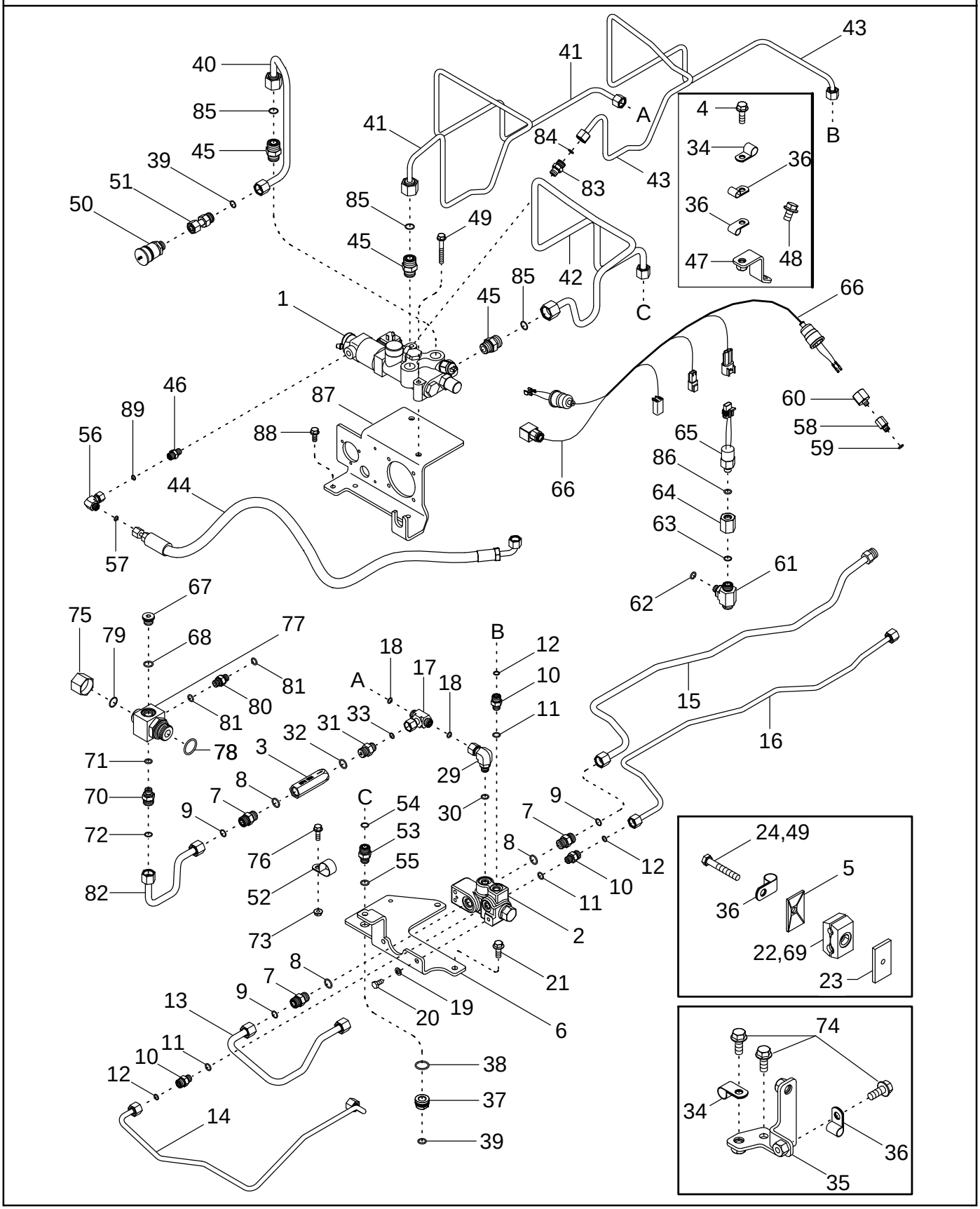

FRENOS DE REMOLQUE - HIDRÁULICOS, SÓLO ITALIA
TRAVÕES DO REBOQUE HIDRÁULICO - APENAS NA ITÁLIA
OPLEGGERREMMEN - HYDRAULISCH, UITSLUITEND ITALIË
ANHÆNGERBREMSER - HYDAULISKE, KUN ITALIEN

R	N	P.N.	MOD	Q	Description Denominacion	Descrizione Denominação	Description Beschrijving	Bezeichnung Beskrivelse	L.C.
70		700-154		1	CONNECTOR, HYD. 13/16 fc sl x 14 Or, Inc. 71, 72				
						RACCORDO IDRAULICO	RACCORD	STUTZEN	020R
					RACOR	CONECTOR	VERBINDING	FORSKRUNING	
71		637-63113		1	O-RING 11,3 ID x 2,2	ANELLO TOROIDALE	JOINT THORIQUE	DICHTRING	055A
					JUNTA HERMETICA	O-RING	O-RING	O-RING	
72		238-6014		1	O-RING 1/2 ID x 1/16	ANELLO TOROIDALE	JOINT TORIQUE	O-RING	7176
					JUNTA HERMETICA	ANEL O	O-RING	O-RING	
73		825-2408		1	NUT M8	DADO	ECROU	MUTTER	5780
					TUERCA	PORCA	MOER	MØTRIK	
74		844-8020		3	BOLT M8 x 20; 8.8	BULLONE	BOULON	SCHAUBENBOLZEN	140B
					TORNILLO	PARAFUSO	BOUT	SKRUE	
75		701-907		1	PLUG 1-3/16	TAPPO	BOUCHON	STOPFEN	6400
					TAPÓN	BUJAO	PLUG	PROP	
76		844-8025		1	SCREW M8 x 25; 8.8	VITE	VIS	SCHRAUBE	7450
					TORNILLO	PARAFUSO	SCHROEF	SKRUE	
77		87402551		1	TEE Inc. 76, 77	PEZZO A T	TE	T-STÜCK	9020
					RACOR-T	TE	TEE	T-STYKKE	
78		637-64296		1	O-RING 29,6 ID x 2,9	ANELLO TOROIDALE	JOINT TORIQUE	O-RING	7176
					JUNTA HERMETICA	ANEL O	O-RING	O-RING	
79		238-6018		1	O-RING 3/4 ID x 1/16	ANELLO TOROIDALE	JOINT TORIQUE	O-RING	7176
					JUNTA HERMETICA	ANEL O	O-RING	O-RING	
80		87403003		1	CONNECTOR, HYD. 14 Or x 14 Or, Inc. 79				
						RACCORDO IDRAULICO	RACCORD	STUTZEN	020R
					RACOR	CONECTOR	VERBINDING	FORSKRUNING	
81		637-63113		2	O-RING 11,3 ID x 2,2	ANELLO TOROIDALE	JOINT THORIQUE	DICHTRING	055A
					JUNTA HERMETICA	O-RING	O-RING	O-RING	
82		87403711		1	TUBE ASSY.	TUBO, COMPLESSIVO	TUYAUTERIE	ROHRLEITUNG	P465
					TUBO (CONJUNTO)	TUBO CONJUNTO	TUBE ASSY.	TUBE ASSY.	
83		87403714		1	CONNECTOR, HYD. Inc. 82	RACCORDO IDRAULICO	RACCORD	STUTZEN	020R
					RACOR	CONECTOR	VERBINDING	FORSKRUNING	
84		238-6012		1	O-RING 3/8 ID x 1/16	ANELLO TOROIDALE	JOINT TORIQUE	O-RING	7176
					JUNTA HERMETICA	ANEL O	O-RING	O-RING	
85		238-6016		3	O-RING 5/8 ID x 1/16	ANELLO TOROIDALE	JOINT TORIQUE	O-RING	7176
					JUNTA HERMETICA	ANEL O	O-RING	O-RING	
86		637-63113		1	O-RING 11,3 ID x 2,2	ANELLO TOROIDALE	JOINT THORIQUE	DICHTRING	055A
					JUNTA HERMETICA	O-RING	O-RING	O-RING	
87		448529A2		1	BRACKET	STAFFA	PATTE FIXATION	HALTERUNG	225S
					PIEZA DE SOPORTE	BRACADEIRA	STEUNBEUGEL	BESLAG	
88		844-8020		3	BOLT M8 x 20	BULLONE	BOULON	SCHAUBENBOLZEN	140B
					TORNILLO	PARAFUSO	BOUT	SKRUE	
89		238-6011		1	O-RING 5/16 ID x 1/16	ANELLO TOROIDALE	JOINT TORIQUE	O-RING	7176
					JUNTA HERMETICA	ANEL O	O-RING	O-RING	

07-15		p1	12/04

TRAILER BRAKES - PNEUMATIC, AIR COMPRESSOR MOUNTING AND DRIVE
FRENI DEL RIMORCHIO - PNEUMATICI, SUPPORTO E COMANDO DEL COMPRESSORE D'ARIA
FREINS DE REMORQUE PNEUMATIQUES, MONTAGE ET ENTRAÎNEMENT DU COMPRESSEUR
ANHÄNGERBREMSEN - PNEUMATISCH, LUFTKOMPRESSORBEFESTIGUNG UND ANTRIEB

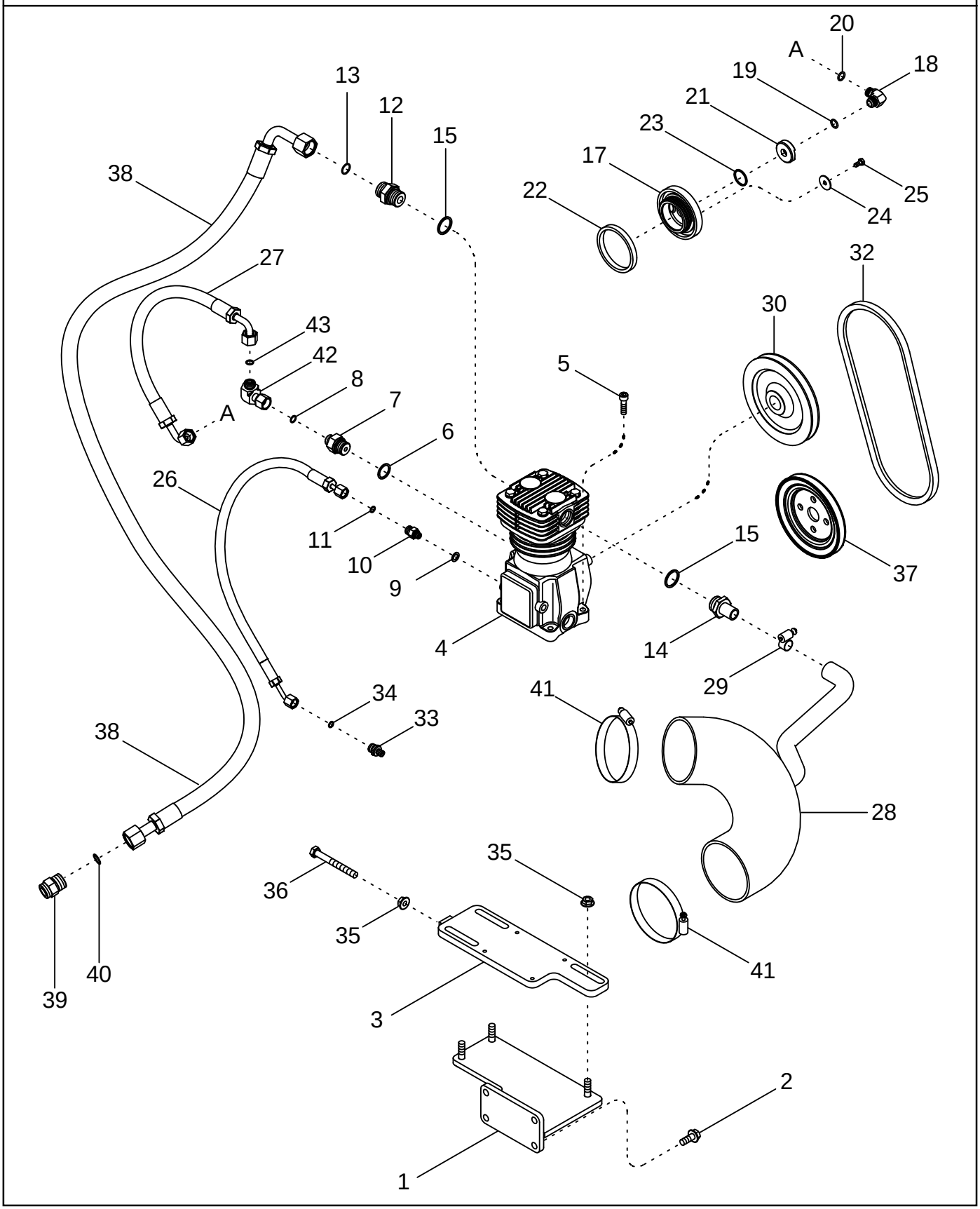

FRENOS DE REMOLQUE - NEUMÁTICOS, TRANSMISIÓN Y MONTAJE DEL COMPRESOR DE AIRE
TRAVÕES DO REBOQUE PNEUMÁTICO - SUPORTE DO COMPRESSOR DE AR E TRANSMISSÃO
OPLEGGERREMMEN - PNEUMATISCHE, BEVESTIGING EN AANDRIJVING LUCHTCOMPRESSOR
ANHÆNGERBREMSER - TRYKLUFT, KOMPRESSORMONTERING OG DREV

R	N	P.N.	MOD	Q	Description Denominacion	Descrizione Denominação	Description Beschrijving	Bezeichnung Beskrivelse	L.C.
1		414808A3		1	BODY CUERPO	CORPO CORPO	CORPS LICHAAM	KÖRPER HUS	300C
2		844-10025		4	SCREW M10 x 20; 8.8 TORNILLO	VITE PARAFUSO	VIS SCHROEF	SCHRAUBE SKRUE	P136
3		433713A1		1	PLATE ASSY. PLACA (CONJUNTO)	PIASTRA, COMPLESSIVO PLACA CONJUNTO	PLAQUE (ASSEMBLEE) PLATE ASSY.	PLATTE (KPLT.) PLATE ASSY.	P433
4		228439A1		1	COMPRESSOR COMPRESSOR	COMPRESSORE COMPRESSOR	COMPRESSEUR COMPRESSOR	KOMPRESSOR KOMPRESSOR	1860
5		844-8030		4	SCREW M8 x 30; 8.8 TORNILLO	VITE PARAFUSO	VIS SCHROEF	SCHRAUBE SKRUE	040V
6		E135040		1	GASKET JUNTA HERMETICA	GUARNIZIONE JUNTA	JOINT DICHTINGSSTUK	DICHTUNG, FLACH PAKNING	123G
7		224236A1		1	FITTING Inc. 8 CONEXION	RACCORDO CONEXAO	RACCORD FITTING	ANSCHLUSSSTÜCK FITTING	3300
8		238-6012		1	O-RING 3/8 ID x 1/16 JUNTA HERMETICA	ANELLO TOROIDALE ANEL O	JOINT TORIQUE O-RING	O-RING O-RING	7176
9		718743R1		1	RING ANILLO	ANELLO ANEL	ANNEAU RING	RING RING	045A
10		176896A1		1	UNION 9/16 fc sl x 10 Or, Includes 11 CONEXION	RACCORDO A GOMITO UNIAO	UNION KOPPELING	VERBAND FORSKRUNING	9560
11		238-6011		1	O-RING 5/16 ID x 1/16 JUNTA HERMETICA	ANELLO TOROIDALE ANEL O	JOINT TORIQUE O-RING	O-RING O-RING	7176
12		224234A2		1	FITTING Includes 13 CONEXION	RACCORDO CONEXAO	RACCORD FITTING	ANSCHLUSSSTÜCK FITTING	3300
13		238-6016		1	O-RING 5/8 ID x 1/16 JUNTA HERMETICA	ANELLO TOROIDALE ANEL O	JOINT TORIQUE O-RING	O-RING O-RING	7176
14		897502H1		1	ADAPTER ADAPTOR	ADATTATORE ADAPTOR	ADAPTEUR VERLOOPSTUK	ADAPTER ADAPTER	001A
15		933608R1		2	RING, PACKING 26 x 31 mm ARANDELA JUNTA	ANELLO, DI RIEMPIM. ARANDELA JUNTA	RONDELLE JOINT RING, PACKING	DICHTRING PAKNINGSRING	P614
17		J918215		1	ADAPTER ADAPTOR	ADATTATORE ADAPTOR	ADAPTEUR VERLOOPSTUK	ADAPTER ADAPTER	001A
18		201-304		1	ELBOW 11/16 fc sl x 9/16 Or, Inc. 19, 20 CODO	GOMITO JOELHO	COUDE ELLEBOOG	KNIESTÜCK VINKELRØR	2940
19		237-6006		1	O-RING 15/32 ID x 5/64 JUNTA HERMETICA	ANELLO TOROIDALE O-RING	JOINT THORIQUE O-RING	DICHTRING O-RING	055A
20		238-6012		1	O-RING 3/8 ID x 1/16 JUNTA HERMETICA	ANELLO TOROIDALE ANEL O	JOINT TORIQUE O-RING	O-RING O-RING	7176
21		177335A3		1	PLATE, LARGE PLACA, GRANDE	PIASTRA, LARGA PLACA ESPESSA	PLAQUE, GRANDE PLATE, LARGE	PLATTE, GROSS PLATE, LARGE	Z308
22		J903475		1	SEAL ANILLO DE CIERRE	ANELLO DI TENUTA ANEL DE VEDACAO	JOINT DICHTINGSRING	DICHTUNG PAKNINGSRING	132A
23		J915800		1	O-RING JUNTA HERMETICA	ANELLO TOROIDALE O-RING	JOINT THORIQUE O-RING	DICHTRING O-RING	055A
24		T103887		2	WASHER ARANDELA	ROSETTA PIANA ANILHA	RONDELLE SLUITRING	BEILAGSCHEIBE FLADSKIVE	131R

07-15		p2	12/04

TRAILER BRAKES - PNEUMATIC, AIR COMPRESSOR MOUNTING AND DRIVE
FRENI DEL RIMORCHIO - PNEUMATICI, SUPPORTO E COMANDO DEL COMPRESSORE D'ARIA
FREINS DE REMORQUE PNEUMATIQUES, MONTAGE ET ENTRAÎNEMENT DU COMPRESSEUR
ANHÄNGERBREMSEN - PNEUMATISCH, LUFTKOMPRESSORBEFESTIGUNG UND ANTRIEB

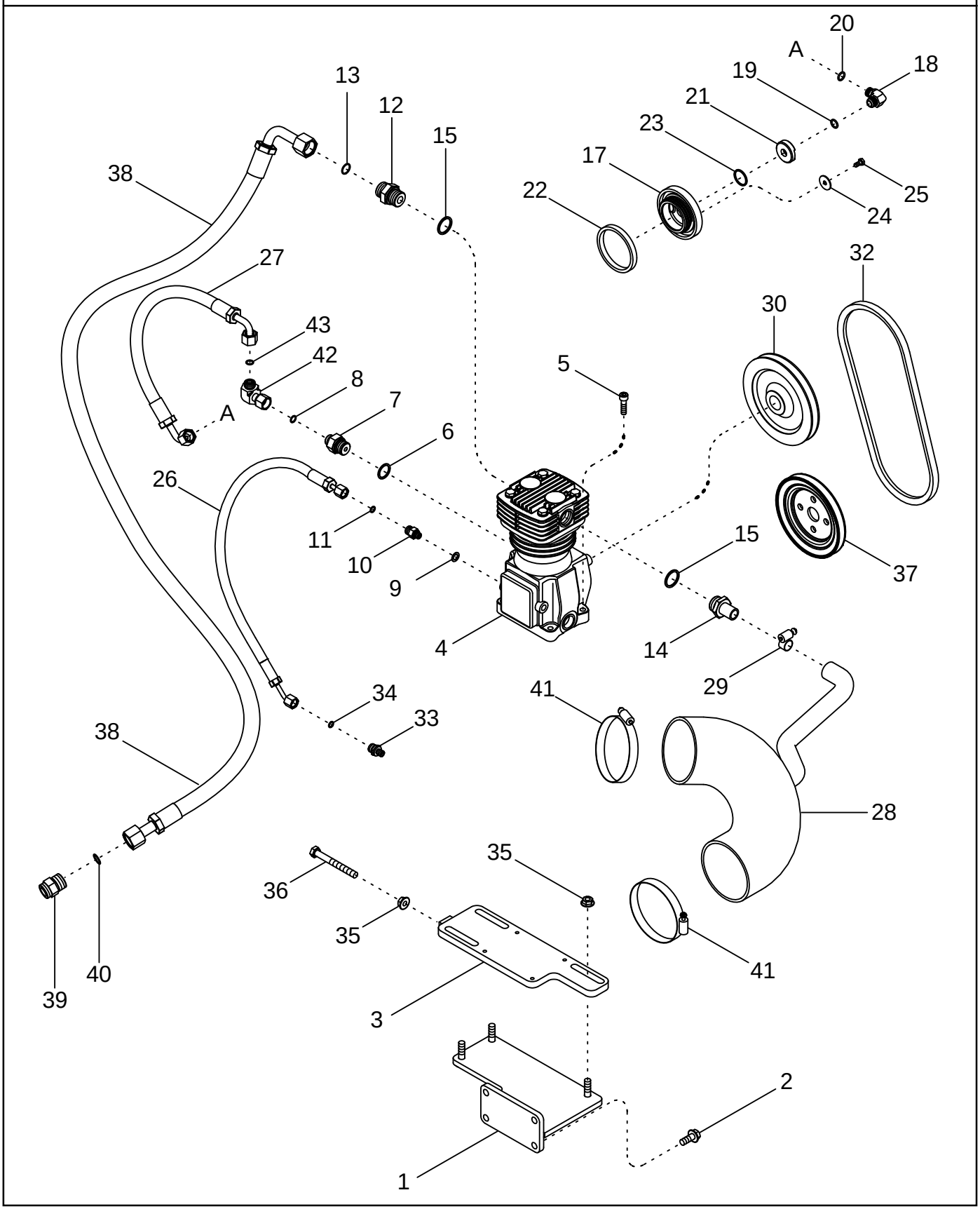

FRENOS DE REMOLQUE - NEUMÁTICOS, TRANSMISIÓN Y MONTAJE DEL COMPRESOR DE AIRE
TRAVÕES DO REBOQUE PNEUMÁTICO - SUPORTE DO COMPRESSOR DE AR E TRANSMISSÃO
OPLEGGERREMMEN - PNEUMATISCHE, BEVESTIGING EN AANDRIJVING LUCHTCOMPRESSOR
ANHÆNGERBREMSER - TRYKLUFT, KOMPRESSORMONTERING OG DREV

R	N	P.N.	MOD	Q	Description Denominacion	Descrizione Denominação	Description Beschrijving	Bezeichnung Beskrivelse	L.C.
25		614-6012		2	SCREW M6 x 12; 8,8 TORNILLO	VITE PARAFUSO	VIS SCHROEF	SCHRAUBE SKRUE	7450
26		87404446		1	HOSE ASSY. MANGUERA (CONJUNTO	GRUPPO TUBO FLESS MANGUEIRA CONJUNTO	FLEXIBLE (ASSEMBLE) HOSE ASSY.	SCHLAUCH (KPLT.) HOSE ASSY.	P457
27		87404448		1	HOSE ASSY. MANGUERA (CONJUNTO	GRUPPO TUBO FLESS MANGUEIRA CONJUNTO	FLEXIBLE (ASSEMBLE) HOSE ASSY.	SCHLAUCH (KPLT.) HOSE ASSY.	P457
28		435713A1		1	HOSE MANGA	MANICOTTO FLESSIBILE TUBO FLEXIVEL	FLEXIBLE FLEXIBELE BUIS	SCHLAUCH SLANGE	030M
29		214-1412		1	CLAMP COLLAR	MORSETTO BRACADEIRA	COLLIER CLAMP	SCHELLE CLAMP	1640
30		191348A1		1	PULLEY POLEA	PULEGGIA POLIE	POULIE RIEMSCHIJF	RIEMENSCHEIBE REMSKIVE	230P
32		86989142		1	V-BELT CORREA TRAPEZOIDAL	CINGHIA, TRAPEZ CORREIA V	COURROIE TRAPEZOID. V-BELT	KEILRIEMEN V-BELT	Z087
33		700-171		1	CONNECTOR Inc. 34 CONECTOR	CONNESSIONE CONECTOR	CONNECTEUR VERBINDING	STECKVERBINDUNG ELI STIK	1950
34		238-6011		1	O-RING 5/16 ID x 1/16 JUNTA HERMETICA	ANELLO TOROIDALE ANEL O	JOINT TORIQUE O-RING	O-RING O-RING	7176
35		825-2410		4	NUT M10 TUERCA	DADO PORCA	ECROU MOER	MUTTER MØTRIK	010D
36		614-10090		1	SCREW M10 x 90; 8.8 TORNILLO	VITE PARAFUSO	VIS SCHROEF	SCHRAUBE SKRUE	P136
37		431716A1		1	PULLEY POLEA	PULEGGIA POLIE	POULIE RIEMSCHIJF	RIEMENSCHEIBE REMSKIVE	230P
38		87405124		1	HOSE MANGA	MANICOTTO FLESSIBILE TUBO FLEXIVEL	FLEXIBLE FLEXIBELE BUIS	SCHLAUCH SLANGE	030M
39		86991153		1	ADAPTER Inc. 40 ADAPTOR	ADATTATORE ADAPTOR	ADAPTEUR VERLOOPSTUK	ADAPTER ADAPTER	001A
40		238-6016		1	O-RING 5/8 ID x 1/16 JUNTA HERMETICA	ANELLO TOROIDALE ANEL O	JOINT TORIQUE O-RING	O-RING O-RING	7176
41		214-3280		2	CLAMP 4-1/4 - 5-1/8 COLLAR	MORSETTO BRACADEIRA	COLLIER CLAMP	SCHELLE CLAMP	1640
42		201-319		1	ELBOW CODO	GOMITO JOELHO	COUDE ELLEBOOG	KNIESTÜCK VINKELRØR	2940
43		238-6012		1	O-RING 3/8 ID x 1/16 JUNTA HERMETICA	ANELLO TOROIDALE ANEL O	JOINT TORIQUE O-RING	O-RING O-RING	7176

07-16		p1	11/04

TRAILER BRAKES - PNEUMATIC, RESERVOIR, EXCEPT ITALY
FRENI DEL RIMORCHIO - PNEUMATICI, SERBATOIO, TRANNE CHE PER L'ITALIA
FREINS DE REMORQUE PNEUMATIQUES - RÉSERVOIR, SAUF ITALIE
ANHÄNGERBREMSEN - PNEUMATISCH, BEHÄLTER (AUSSER ITALIEN)

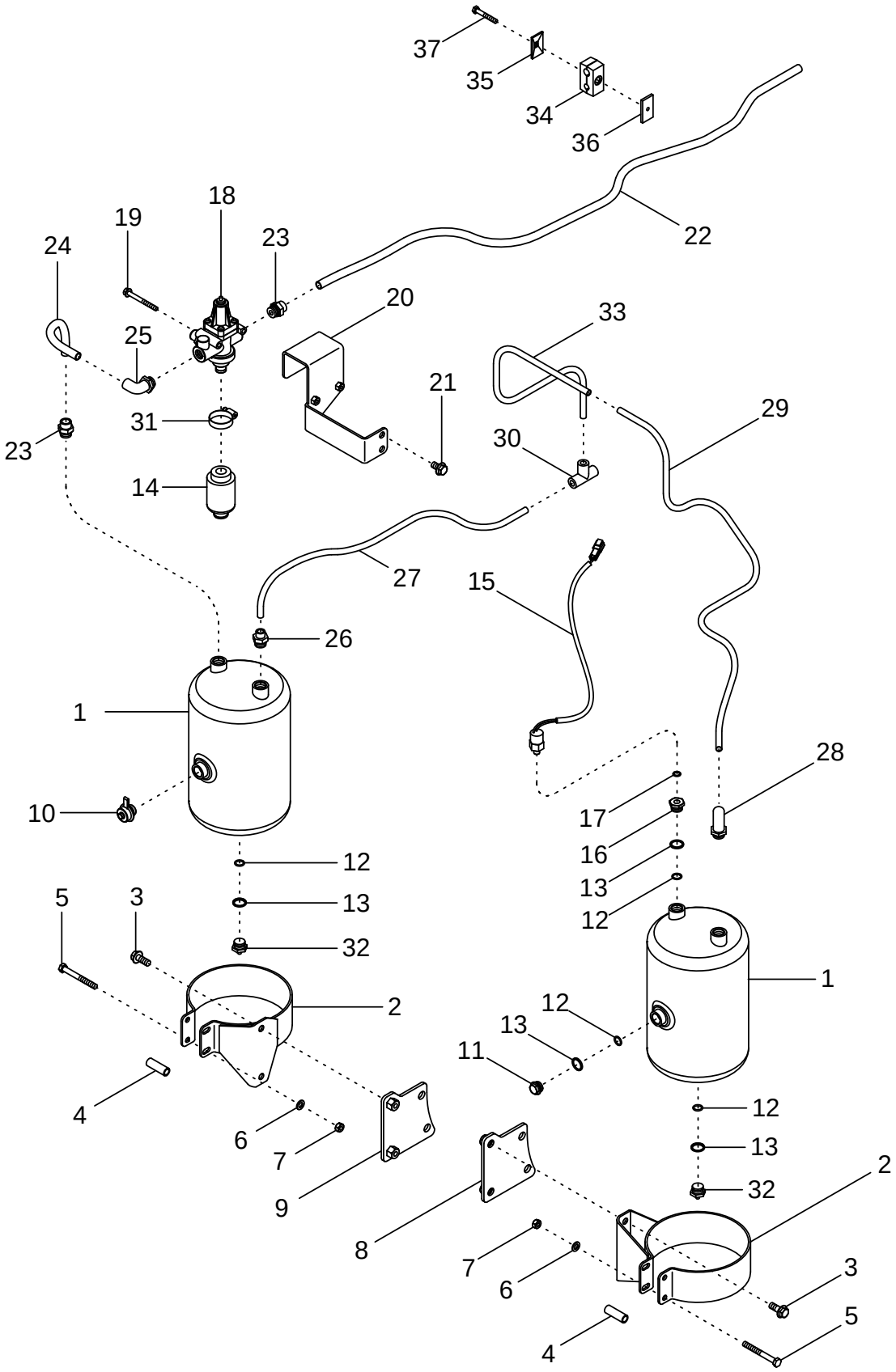

FRENOS DE REMOLQUE - NEUMÁTICOS, DEPÓSITO, EXCEPTO ITALIA
TRAVÕES DO REBOQUE PNEUMÁTICO - RESERVATÓRIO, EXCEPTO NA ITÁLIA
OPLEGGERREMMEN - PNEUMATISCH, RESERVOIR, BEHALVE ITALIË
ANHÆNGERBREMSER - TRYKLUFT, BEHOLDER, UNDTAGEN ITALIEN

R	N	P.N.	MOD	Q	Description Denominacion	Descrizione Denominação	Description Beschrijving	Bezeichnung Beskrivelse	L.C.
1		1530988C1		2	TANK, AIR DEPOSITO AIRE	SERBATOIO, ARIA RESERVATORIO DE AR	RÉSERVOIR D'AIR TANK AIR	LUFTBEHÄLTER TANK, LUFT	P887
2		86985993		2	BRACKET PIEZA DE SOPORTE	STAFFA BRACADEIRA	PATTE FIXATION STEUNBEUGEL	HALTERUNG BESLAG	225S
3		844-12030		4	SCREW M12 x 30; 8.8 TORNILLO	VITE PARAFUSO	VIS SCHROEF	SCHRAUBE SKRUE	7450
4		446035A1		4	SPACER SEPARADOR	DISTANZIALE ESPACADOR	ENTRETOISE AFSTANDSRING	DISTANZSTÜCK AFSTANDSSTYKKE	075D
5		814-10090		4	SCREW M10 x 90; 8.8 TORNILLO	VITE PARAFUSO	VIS SCHROEF	SCHRAUBE SKRUE	P136
6		895-11010		4	WASHER 11 x 20 x 2 mm ARANDELA	ROSETTA PIANA ANILHA	RONDELLE SLUITRING	SCHEIBE FLADSKIVE	9720
7		829-1410		4	NUT M10; 10.9 TUERCA	DADO PORCA	ECROU MOER	MUTTER MØTRIK	5780
8		86985963		1	BRACKET Right Hand PIEZA DE SOPORTE	STAFFA BRACADEIRA	PATTE FIXATION STEUNBEUGEL	HALTERUNG BESLAG	225S
9		86985965		1	BRACKET Left Hand PIEZA DE SOPORTE	STAFFA BRACADEIRA	PATTE FIXATION STEUNBEUGEL	HALTERUNG BESLAG	225S
10		443287A1		1	VALVE VALVULA	VALVOLA VALVULA	SOUPAPE VALVE	VENTIL VALVE	9620
11		716954R1		1	PLUG TAPÓN	TAPPO BUJÃO	BOUCHON PLUG	STOPFEN PROP	050T
12		3076154R1		4	O-RING JUNTA HERMETICA	ANELLO TOROIDALE O-RING	JOINT THORIQUE O-RING	DICHTRING O-RING	055A
13		3076153R1		4	RING, THRUST ANILLO DE EMPUJE	ANELLO, DI SPINTA ANEL DE PRESSAO	BAGUE DE POUSSÉE RING, THRUST	DRUCKKRAFTRING TRYKRING	P618
14		82001979		1	VALVE, HYDRAULIC Silencer VALVULA HIDRAULICA	VALVOLA IDRAULICA VALVULA HIDRAULICA	SOUPAPE HYDRAULIQU KLEP, HYDRAULISCH	VENTIL, HYDRAULISCH VENTIL HYDRAULIK	010V
15		400669A1		1	SWITCH CONTACTOR	INTERRUTTORE INTERRUPTOR	CONTACTEUR SCHAKELAAR	SCHALTER KONTAKT	075I
16		186382A1		1	REDUCER REDUCTOR	RIDUZIONE REDUTOR	REDUCTEUR VERLOOPSTUK	REDUZIERSTÜCK REDUKTION	056R
17		713845R1		1	RING, PACKING ARANDELA JUNTA	ANELLO, DI RIEMPIM. ARANDELA JUNTA	RONDELLE JOINT RING, PACKING	DICHTRING PAKNINGSRING	P614
18		82001015		1	VALVE, HYDRAULIC Unloader VALVULA HIDRAULICA	VALVOLA IDRAULICA VALVULA HIDRAULICA	SOUPAPE HYDRAULIQU KLEP, HYDRAULISCH	VENTIL, HYDRAULISCH VENTIL HYDRAULIK	010V
19		844-8080		2	SCREW M8 x 80; 8.8 TORNILLO	VITE PARAFUSO	VIS SCHROEF	SCHRAUBE SKRUE	7450
20		86985966		1	BRACKET PIEZA DE SOPORTE	STAFFA BRACADEIRA	PATTE FIXATION STEUNBEUGEL	HALTERUNG BESLAG	225S
21		844-12020		2	BOLT M12 x 20; 8.8 TORNILLO	BULLONE PARAFUSO	BOULON BOUT	SCHAUBENBOLZEN SKRUE	140B
22		86991154		1	HOSE Unloader Valve Supply MANGA	MANICOTTO FLESSIBILE TUBO FLEXIVEL	FLEXIBLE FLEXIBELE BUIS	SCHLAUCH SLANGE	030M
23		86984484		2	CONNECTION TERMINAL	CONNETTORE CONECTOR	CONNEXION CONNECTION	VERBINDUNG CONNECTION	P154

07-16		p2	11/04

TRAILER BRAKES - PNEUMATIC, RESERVOIR, EXCEPT ITALY
FRENI DEL RIMORCHIO - PNEUMATICI, SERBATOIO, TRANNE CHE PER L'ITALIA
FREINS DE REMORQUE PNEUMATIQUES - RÉSERVOIR, SAUF ITALIE
ANHÄNGERBREMSEN - PNEUMATISCH, BEHÄLTER (AUSSER ITALIEN)

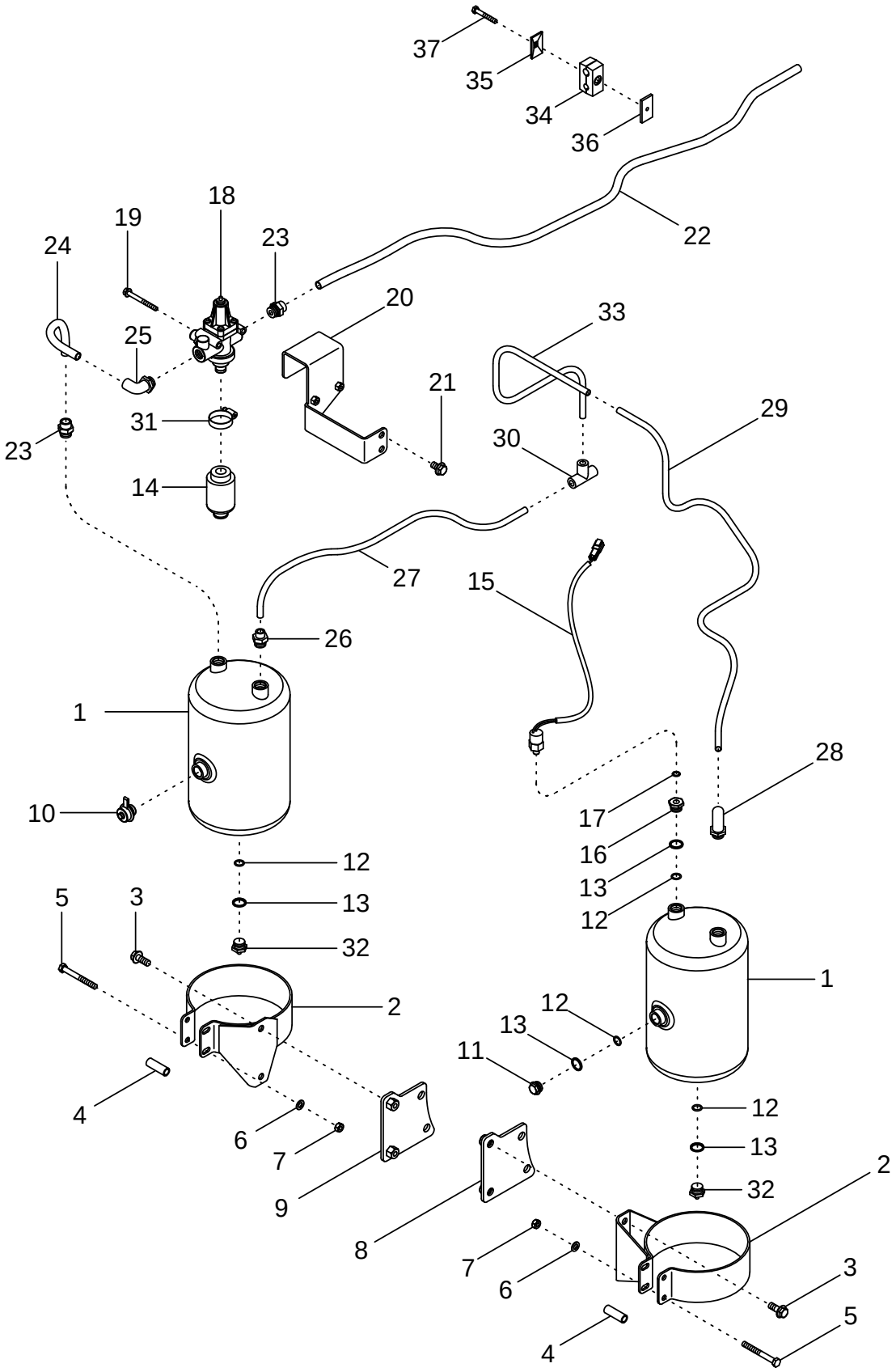

FRENOS DE REMOLQUE - NEUMÁTICOS, DEPÓSITO, EXCEPTO ITALIA
TRAVÕES DO REBOQUE PNEUMÁTICO - RESERVATÓRIO, EXCEPTO NA ITÁLIA
OPLEGGERREMMEN - PNEUMATISCH, RESERVOIR, BEHALVE ITALIË
ANHÆNGERBREMSER - TRYKLUFT, BEHOLDER, UNDTAGEN ITALIEN

R	N	P.N.	MOD	Q	Description Denominacion	Descrizione Denominação	Description Beschrijving	Bezeichnung Beskrivelse	L.C.
24		86985957		1	HOSE MANGA	MANICOTTO FLESSIBILE TUBO FLEXIVEL	FLEXIBLE FLEXIBELE BUIS	SCHLAUCH SLANGE	030M
25		442930A1		1	ELBOW CODO	GOMITO JOELHO	COUDE ELLEBOOG	KNIESTÜCK VINKELROER	085G
26		442924A1		1	CONNECTOR, HYD. RACOR	RACCORDO IDRAULICO CONECTOR	RACCORD VERBINDING	STUTZEN FORSKRUNING	020R
27		86985952		1	HOSE MANGA	MANICOTTO FLESSIBILE TUBO FLEXIVEL	FLEXIBLE FLEXIBELE BUIS	SCHLAUCH SLANGE	030M
28		442929A1		1	ELBOW CODO	GOMITO JOELHO	COUDE ELLEBOOG	KNIESTÜCK VINKELROER	085G
29		86985955		1	HOSE MANGA	MANICOTTO FLESSIBILE TUBO FLEXIVEL	FLEXIBLE FLEXIBELE BUIS	SCHLAUCH SLANGE	030M
30		442925A1		1	TEE RACOR-T	PEZZO A T TE	TE TEE	T-STÜCK T-STYKKE	9020
31		214-1536		1	CLAMP COLLAR	MORSETTO BRACADEIRA	COLLIER CLAMP	SCHELLE CLAMP	1640
32		897123H2		2	VALVE VALVULA	VALVOLA VALVULA	SOUPAPE VALVE	VENTIL VALVE	9620
33		86985951		1	HOSE MANGA	MANICOTTO FLESSIBILE TUBO FLEXIVEL	FLEXIBLE FLEXIBELE BUIS	SCHLAUCH SLANGE	030M
34		109619A1		2	ANCHOR FIJACION	ANCORAGGIO FIXADOR	PIECE DE FIXATION ANKER	VERANKERUNG ANKER	0120
35		384870A1		2	PLATE PLACA	PIASTRA CHAPA	PLAQUE PLAAT	PLATTE PLADE	105P
36		384871A1		2	PLATE PLACA	PIASTRA CHAPA	PLAQUE PLAAT	PLATTE PLADE	105P
37		814-8055		2	SCREW M8 x 55; 8.8 TORNILLO	VITE PARAFUSO	VIS SCHROEF	SCHRAUBE SKRUE	7450

07-17		p1	11/04

TRAILER BRAKES - PNEUMATIC, RESERVOIR, ITALY ONLY
FRENI DEL RIMORCHIO - PNEUMATICI, SERBATOIO, SOLO PER L'ITALIA
FREINS DE REMORQUE PNEUMATIQUES -RÉSERVOIR, ITALIE UNIQUEMENT
ANHÄNGERBREMSEN - PNEUMATISCH, BEHÄLTER (NUR ITALIEN)

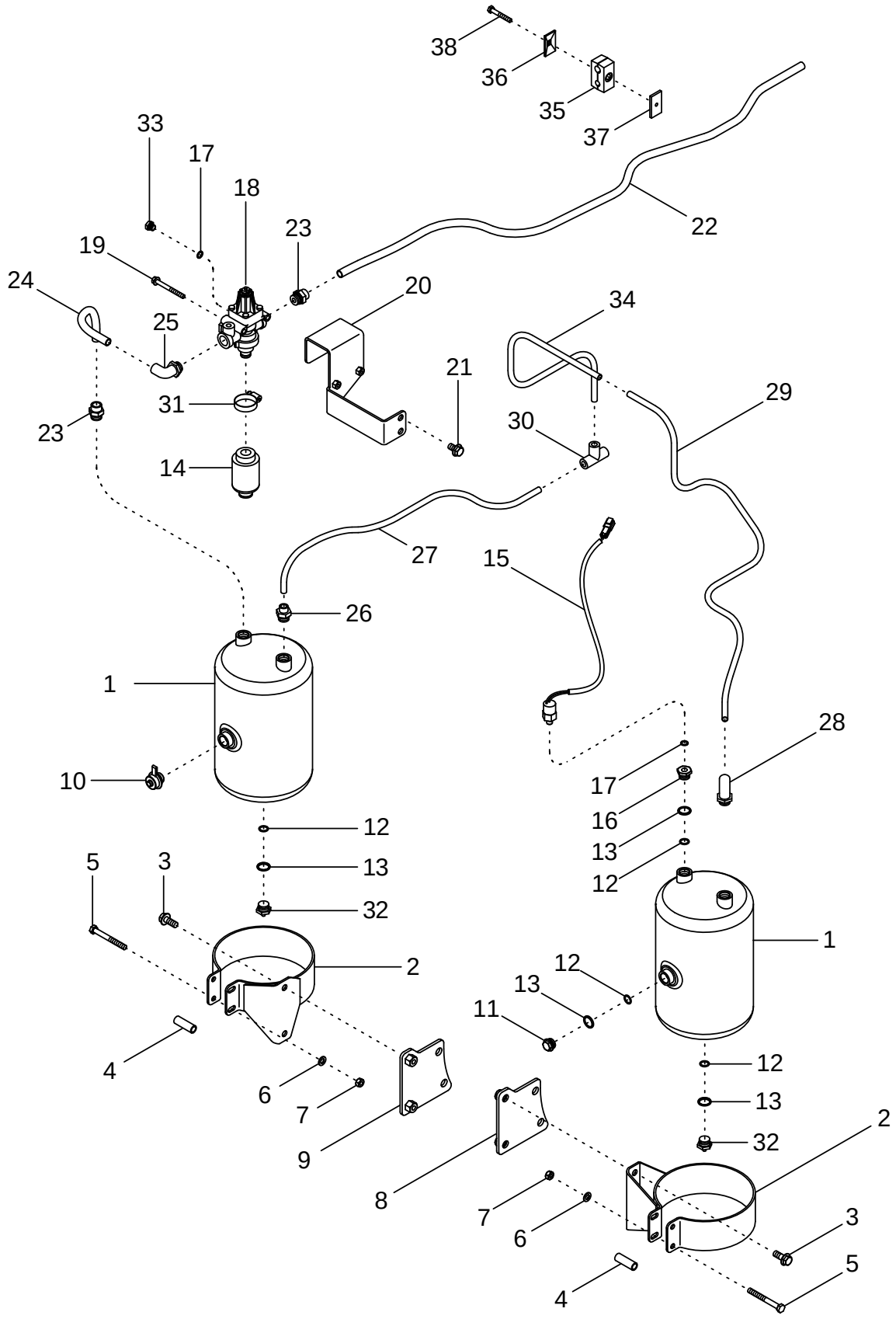

FRENOS DE REMOLQUE - NEUMÁTICOS, DEPÓSITO, SÓLO ITALIA
TRAVÕES DO REBOQUE PNEUMÁTICO - RESERVATÓRIO, APENAS NA ITÁLIA
OPLEGGERREMMEN - PNEUMATISCH, RESERVOIR, UITSLUITEND ITALIË
ANHÆNGERBREMSER - TRYKLUFT, BEHOLDER, KUN ITALIEN

R	N	P.N.	MOD	Q	Description Denominacion	Descrizione Denominação	Description Beschrijving	Bezeichnung Beskrivelse	L.C.
1		1530988C1		2	TANK, AIR DEPOSITO AIRE	SERBATOIO, ARIA RESERVATORIO DE AR	RÉSERVOIR D'AIR TANK AIR	LUFTBEHÄLTER TANK, LUFT	P887
2		86985993		2	BRACKET PIEZA DE SOPORTE	STAFFA BRACADEIRA	PATTE FIXATION STEUNBEUGEL	HALTERUNG BESLAG	225S
3		844-12030		4	SCREW M12 x 30; 8.8 TORNILLO	VITE PARAFUSO	VIS SCHROEF	SCHRAUBE SKRUE	7450
4		446035A1		4	SPACER SEPARADOR	DISTANZIALE ESPACADOR	ENTRETOISE AFSTANDSRING	DISTANZSTÜCK AFSTANDSSTYKKE	075D
5		814-10090		4	SCREW M10 x 90; 8.8 TORNILLO	VITE PARAFUSO	VIS SCHROEF	SCHRAUBE SKRUE	P136
6		895-11010		4	WASHER 11 x 20 x 2 mm ARANDELA	ROSETTA PIANA ANILHA	RONDELLE SLUITRING	SCHEIBE FLADSKIVE	9720
7		829-1410		4	NUT M10; 10.9 TUERCA	DADO PORCA	ECROU MOER	MUTTER MØTRIK	5780
8		86985963		1	BRACKET Right Hand PIEZA DE SOPORTE	STAFFA BRACADEIRA	PATTE FIXATION STEUNBEUGEL	HALTERUNG BESLAG	225S
9		86985965		1	BRACKET Left Hand PIEZA DE SOPORTE	STAFFA BRACADEIRA	PATTE FIXATION STEUNBEUGEL	HALTERUNG BESLAG	225S
10		443287A1		1	VALVE VALVULA	VALVOLA VALVULA	SOUPAPE VALVE	VENTIL VALVE	9620
11		716954R1		1	PLUG TAPÓN	TAPPO BUJÃO	BOUCHON PLUG	STOPFEN PROP	050T
12		3076154R1		4	O-RING JUNTA HERMETICA	ANELLO TOROIDALE O-RING	JOINT THORIQUE O-RING	DICHTRING O-RING	055A
13		3076153R1		3	RING, THRUST ANILLO DE EMPUJE	ANELLO, DI SPINTA ANEL DE PRESSAO	BAGUE DE POUSSÉE RING, THRUST	DRUCKKRAFTRING TRYKRING	P618
14		82001979		1	VALVE, HYDRAULIC Silencer VALVULA HIDRAULICA	VALVOLA IDRAULICA VALVULA HIDRAULICA	SOUPAPE HYDRAULIQU KLEP, HYDRAULISCH	VENTIL, HYDRAULISCH VENTIL HYDRAULIK	010V
15		400669A1		1	SWITCH CONTACTOR	INTERRUTTORE INTERRUPTOR	CONTACTEUR SCHAKELAAR	SCHALTER KONTAKT	075I
16		186382A1		1	REDUCER REDUCTOR	RIDUZIONE REDUTOR	REDUCTEUR VERLOOPSTUK	REDUZIERSTÜCK REDUKTION	056R
17		713845R1		2	RING, PACKING ARANDELA JUNTA	ANELLO, DI RIEMPIM. ARANDELA JUNTA	RONDELLE JOINT RING, PACKING	DICHTRING PAKNINGSRING	P614
18		T103977		1	VALVE, PRESSURE RELIEF Unloader VÁLVULA, DESCARGA	VALVOLA, DI SICUREZZA VÁLVULA, DESCARGA	SOUPAPE, DÉCHARGE OVERDRUKVENTIEL	ÜBERDRUCKVENTIL SIKKERHEDSVENTIL	007V
19		844-8080		2	SCREW M8 x 80; 8.8 TORNILLO	VITE PARAFUSO	VIS SCHROEF	SCHRAUBE SKRUE	7450
20		86985966		1	BRACKET PIEZA DE SOPORTE	STAFFA BRACADEIRA	PATTE FIXATION STEUNBEUGEL	HALTERUNG BESLAG	225S
21		844-12020		2	BOLT M12 x 20; 8.8 TORNILLO	BULLONE PARAFUSO	BOULON BOUT	SCHAUBENBOLZEN SKRUE	140B
22		86991154		1	HOSE Unloader Valve Supply MANGA	MANICOTTO FLESSIBILE TUBO FLEXIVEL	FLEXIBLE FLEXIBELE BUIS	SCHLAUCH SLANGE	030M
23		86984484		2	CONNECTION TERMINAL	CONNETTORE CONECTOR	CONNEXION CONNECTION	VERBINDUNG CONNECTION	P154

TRAILER BRAKES - PNEUMATIC, RESERVOIR, ITALY ONLY
FRENI DEL RIMORCHIO - PNEUMATICI, SERBATOIO, SOLO PER L'ITALIA
FREINS DE REMORQUE PNEUMATIQUES -RÉSERVOIR, ITALIE UNIQUEMENT
ANHÄNGERBREMSEN - PNEUMATISCH, BEHÄLTER (NUR ITALIEN)

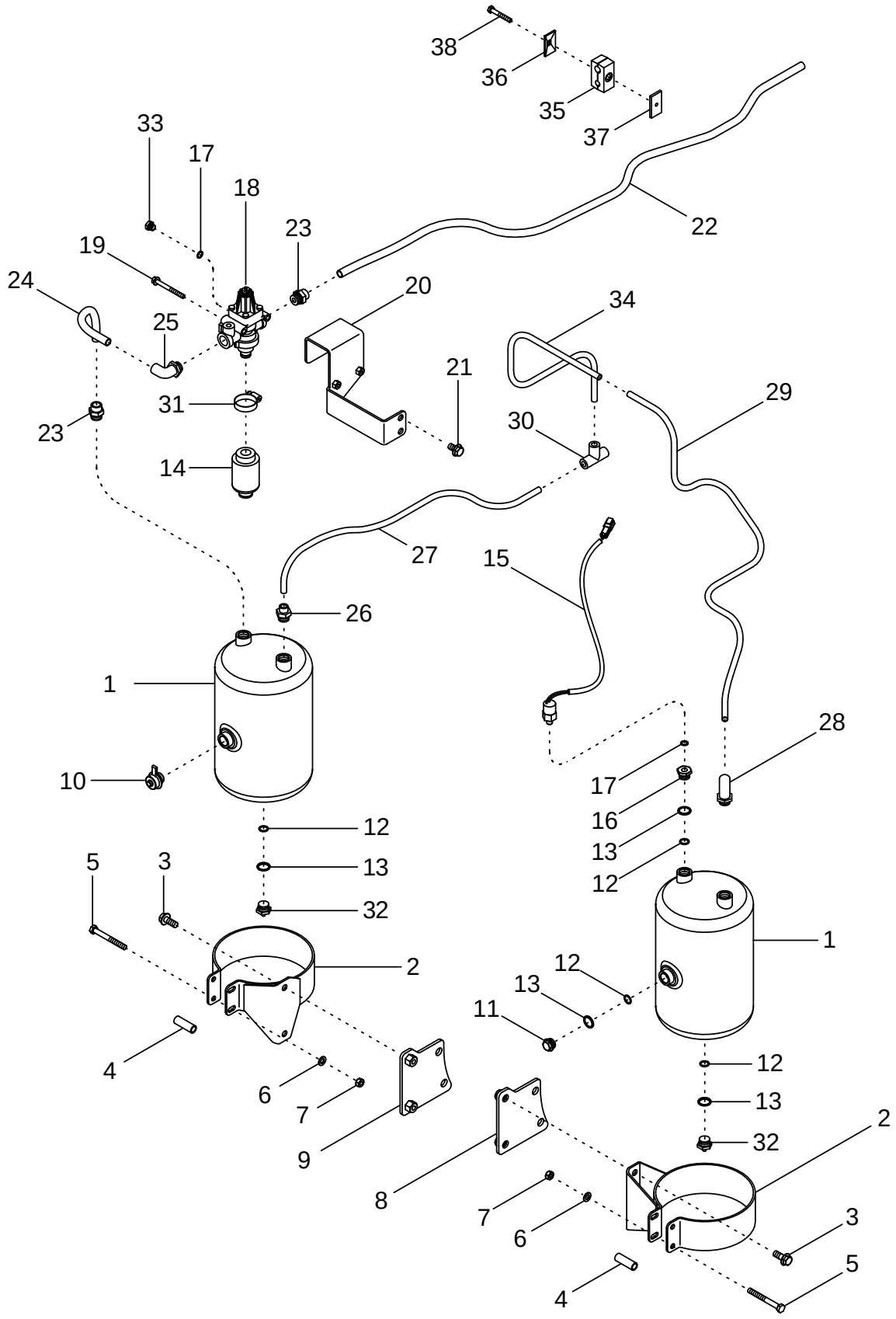

FRENOS DE REMOLQUE - NEUMÁTICOS, DEPÓSITO, SÓLO ITALIA
TRAVÕES DO REBOQUE PNEUMÁTICO - RESERVATÓRIO, APENAS NA ITÁLIA
OPLEGGERREMMEN - PNEUMATISCH, RESERVOIR, UITSLUITEND ITALIË
ANHÆNGERBREMSER - TRYKLUFT, BEHOLDER, KUN ITALIEN

R	N	P.N.	MOD	Q	Description Denominacion	Descrizione Denominação	Description Beschrijving	Bezeichnung Beskrivelse	L.C.
24		86985957		1	HOSE MANGA	MANICOTTO FLESSIBILE TUBO FLEXIVEL	FLEXIBLE FLEXIBELE BUIS	SCHLAUCH SLANGE	030M
25		442930A1		1	ELBOW CODO	GOMITO JOELHO	COUDE ELLEBOOG	KNIESTÜCK VINKELROER	085G
26		442924A1		1	CONNECTOR, HYD. RACOR	RACCORDO IDRAULICO CONECTOR	RACCORD VERBINDING	STUTZEN FORSKRUNING	020R
27		86985952		1	HOSE MANGA	MANICOTTO FLESSIBILE TUBO FLEXIVEL	FLEXIBLE FLEXIBELE BUIS	SCHLAUCH SLANGE	030M
28		442929A1		1	ELBOW CODO	GOMITO JOELHO	COUDE ELLEBOOG	KNIESTÜCK VINKELROER	085G
29		86985955		1	HOSE MANGA	MANICOTTO FLESSIBILE TUBO FLEXIVEL	FLEXIBLE FLEXIBELE BUIS	SCHLAUCH SLANGE	030M
30		442925A1		1	TEE RACOR-T	PEZZO A T TE	TE TEE	T-STÜCK T-STYKKE	9020
31		214-1536		1	CLAMP COLLAR	MORSETTO BRACADEIRA	COLLIER CLAMP	SCHELLE CLAMP	1640
32		897123H2		1	VALVE VALVULA	VALVOLA VALVULA	SOUPAPE VALVE	VENTIL VALVE	9620
33		933321R1		1	UNION CONEXION	RACCORDO A GOMITO UNIAO	UNION KOPPELING	VERBAND FORSKRUNING	9560
34		86985951		1	HOSE MANGA	MANICOTTO FLESSIBILE TUBO FLEXIVEL	FLEXIBLE FLEXIBELE BUIS	SCHLAUCH SLANGE	030M
35		109619A1		2	ANCHOR FIJACION	ANCORAGGIO FIXADOR	PIECE DE FIXATION ANKER	VERANKERUNG ANKER	0120
36		384870A1		2	PLATE PLACA	PIASTRA CHAPA	PLAQUE PLAAT	PLATTE PLADE	105P
37		384871A1		2	PLATE PLACA	PIASTRA CHAPA	PLAQUE PLAAT	PLATTE PLADE	105P
38		814-8055		2	SCREW M8 x 55; 8.8 TORNILLO	VITE PARAFUSO	VIS SCHROEF	SCHRAUBE SKRUE	7450

TRAILER BRAKES - PNEUMATIC, VALVES
FRENI DEL RIMORCHIO - PNEUMATICI, VALVOLE
FREINS DE REMORQUE PNEUMATIQUES - SOUPAPES
ANHÄNGERBREMSEN - PNEUMATISCH, VENTILE

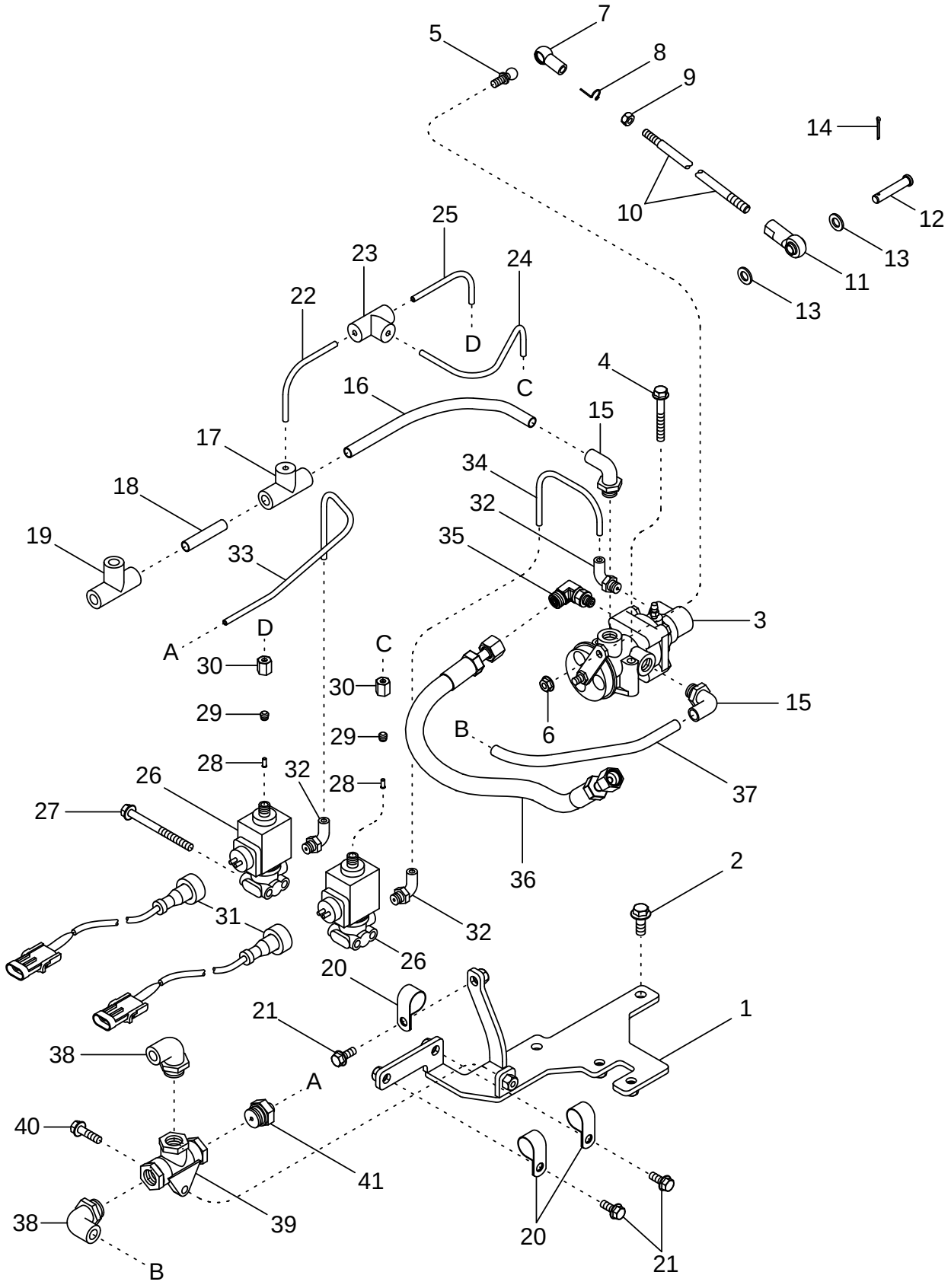

FRENOS DE REMOLQUE - NEUMÁTICOS, VÁLVULAS
TRAVÕES DO REBOQUE PNEUMÁTICO - VÁLVULAS
OPLEGGERREMMEN - PNEUMATISCH, KLEPPEN
ANHÆNGERBREMSER - TRYKLUFT, VENTILER

R	N	P.N.	MOD	Q	Description Denominacion	Descrizione Denominação	Description Beschrijving	Bezeichnung Beskrivelse	L.C.
1		86987547		1	BRACKET PIEZA DE SOPORTE	STAFFA BRACADEIRA	PATTE FIXATION STEUNBEUGEL	HALTERUNG BESLAG	225S
2		844-10025		2	SCREW M10 x 25; 8.8 TORNILLO	VITE PARAFUSO	VIS SCHROEF	SCHRAUBE SKRUE	P136
3		224360A1		1	VALVE VALVULA	VALVOLA VALVULA	VALVE VALVE	VENTIL VALVE	P468
4		844-8060		2	SCREW M8 x 60; 8.8 TORNILLO	VITE PARAFUSO	VIS SCHROEF	SCHRAUBE SKRUE	7450
5		3229351R1		1	BALL JOINT JUNTA DE ROTULA	GIUNTO SFERICO JUNTA ESFÉRICA	ROTULE KOGELGEWRICHT	KUGELGELENK KUGLELED	070G
6		825-2408		1	NUT M8 TUERCA	DADO PORCA	ECROU MOER	MUTTER MØTRIK	5780
7		231532A1		1	BALL JOINT JUNTA DE ROTULA	GIUNTO SFERICO JUNTA ESFÉRICA	ROTULE KOGELGEWRICHT	KUGELGELENK KUGLELED	070G
8		3233348R1		1	CLIP, ELECTRICAL CLIP ELECTRICO	FERMAGLIO, ELETTR. GRAMPO	CLIP CLIP, ELECTRICAL	KABELSTECKSCHUH CLIP, ELECTRICAL	Z327
9		829-1408		1	NUT M8; 10 TUERCA	DADO PORCA	ECROU MOER	MUTTER MØTRIK	010D
10		86985983		1	ROD VARILLA	ASTA HASTE	TRINGLE STANG	STANGE STANG	090A
11		D136773		1	BALL JOINT JUNTA DE ROTULA	GIUNTO SFERICO JUNTA ESFÉRICA	ROTULE KOGELGEWRICHT	KUGELGELENK KUGLELED	070G
12		427-6200		1	PIN, CLEVIS PASADOR DE HORQUILL	SPINA, PER FORCELLA CUPILHA	AXE DE CHAPE PIN, CLEVIS	GABELSTIFT GAFFELBOLT	P694
13		895-11010		2	WASHER 11 x 20 x 2 mm ARANDELA	ROSETTA PIANA ANILHA	RONDELLE SLUITRING	SCHEIBE FLADSKIVE	9720
14		733-2520		1	SPLIT PIN/SAFETY PIN PASADOR	PERNO DIVISO PINO	GOUPILLE SPLIT PIN/SAFETY PIN	SPLINT/STIFT SPLIT PIN/SAFETY PIN	Z510
15		442928A1		2	ELBOW CODO	GOMITO JOELHO	COUDE ELLEBOOG	KNIESTÜCK VINKELROER	085G
16		86985944		1	HOSE MANGA	MANICOTTO FLESSIBILE TUBO FLEXIVEL	FLEXIBLE FLEXIBELE BUIS	SCHLAUCH SLANGE	030M
17		442926A1		1	TEE RACOR-T	PEZZO A T TE	TE TEE	T-STÜCK T-STYKKE	9020
18		86985943		1	HOSE MANGA	MANICOTTO FLESSIBILE TUBO FLEXIVEL	FLEXIBLE FLEXIBELE BUIS	SCHLAUCH SLANGE	030M
19		442925A1		1	TEE RACOR-T	PEZZO A T TE	TE TEE	T-STÜCK T-STYKKE	9020
20		515-23238		3	CLAMP COLLAR	MORSETTO BRACADEIRA	COLLIER CLAMP	SCHELLE CLAMP	1640
21		844-8020		3	BOLT M8 x 20; 8.8 TORNILLO	BULLONE PARAFUSO	BOULON BOUT	SCHAUBENBOLZEN SKRUE	140B
22		86985946		1	HOSE MANGA	MANICOTTO FLESSIBILE TUBO FLEXIVEL	FLEXIBLE FLEXIBELE BUIS	SCHLAUCH SLANGE	030M
23		86987467		1	TEE RACOR-T	PEZZO A T TE	TE TEE	T-STÜCK T-STYKKE	9020
24		86987483		1	HOSE MANGA	MANICOTTO FLESSIBILE TUBO FLEXIVEL	FLEXIBLE FLEXIBELE BUIS	SCHLAUCH SLANGE	030M

TRAILER BRAKES - PNEUMATIC, VALVES
FRENI DEL RIMORCHIO - PNEUMATICI, VALVOLE
FREINS DE REMORQUE PNEUMATIQUES - SOUPAPES
ANHÄNGERBREMSEN - PNEUMATISCH, VENTILE

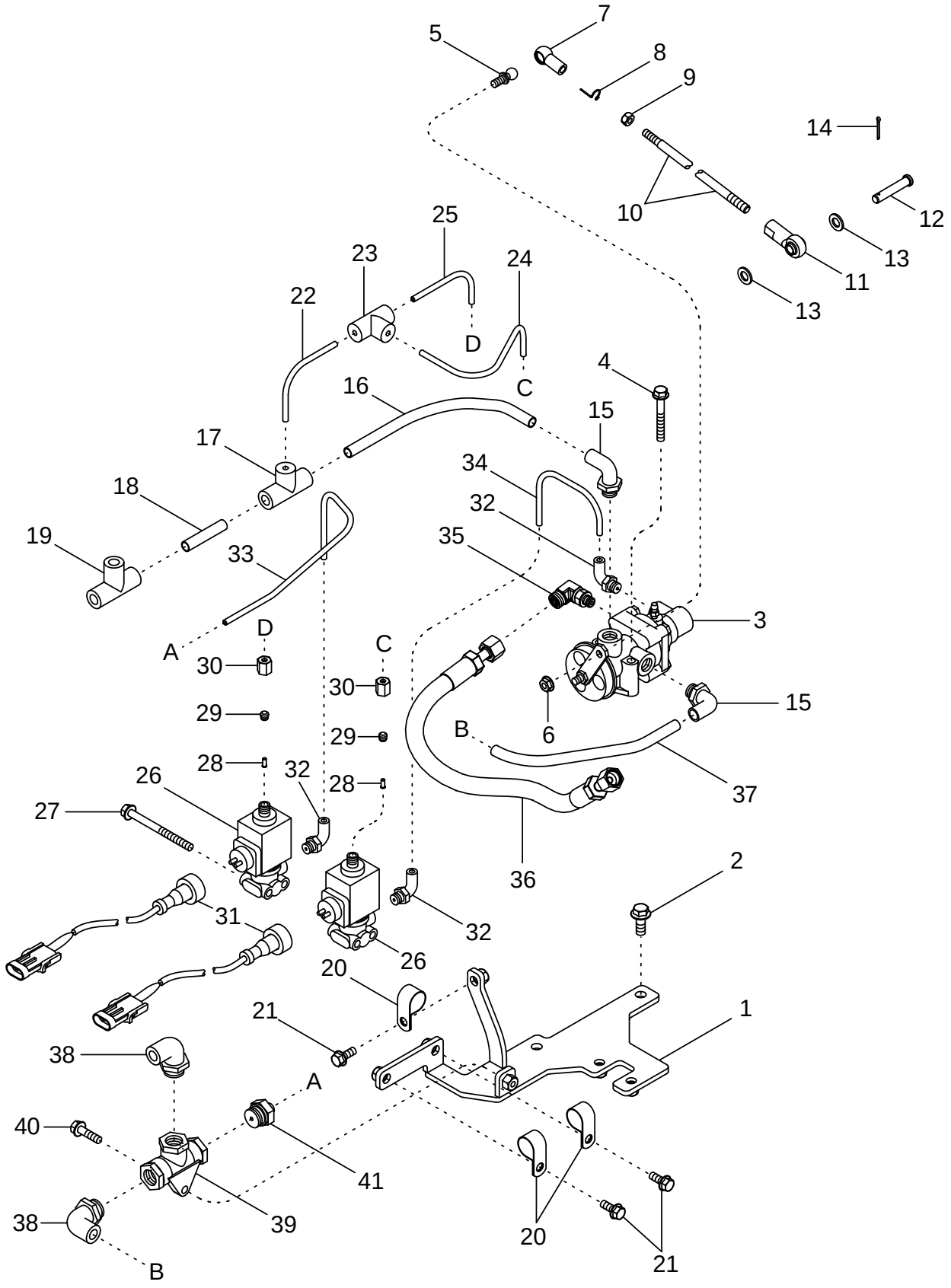

FRENOS DE REMOLQUE - NEUMÁTICOS, VÁLVULAS
TRAVÕES DO REBOQUE PNEUMÁTICO - VÁLVULAS
OPLEGGERREMMEN - PNEUMATISCH, KLEPPEN
ANHÆNGERBREMSER - TRYKLUFT, VENTILER

R	N	P.N.	MOD	Q	Description Denominacion	Descrizione Denominação	Description Beschrijving	Bezeichnung Beskrivelse	L.C.
25		86985947		1	HOSE MANGA	MANICOTTO FLESSIBILE TUBO FLEXIVEL	FLEXIBLE FLEXIBELE BUIS	SCHLAUCH SLANGE	030M
26		1531984C1		2	VALVE, SOLENOID ELECTROVÁLVULA	ELETTROVALVOLA ELECTROVÁLVULA	ELECTRO-VALVE STOOTLAGER	MAGNETVENTIL MAGNETVENTIL	Z337
27		845-8095		2	SCREW M8 x 95; 8.8 TORNILLO	VITE PARAFUSO	VIS SCHROEF	SCHRAUBE SKRUE	7450
28		1531863C1		2	SLEEVE MANGUITO	MANICOTTO TUBO	MANCHON SLEEVE	MUFFE TRYKLEJE, KOBLING	031M
29		3138533R1		2	SLEEVE MANGUITO	MANICOTTO TUBO	MANCHON SLEEVE	MUFFE TRYKLEJE, KOBLING	031M
30		3138527R1		2	NUT TUERCA	DADO PORCA	ECROU MOER	MUTTER MØTRIK	010D
31		327970A1		2	PLUG TAPÓN	TAPPO BUJÃO	BOUCHON PLUG	STOPFEN PROP	050T
32		442927A1		3	ELBOW CODO	GOMITO JOELHO	COUDE ELLEBOOG	KNIESTÜCK VINKELROER	085G
33		86985949		1	HOSE MANGA	MANICOTTO FLESSIBILE TUBO FLEXIVEL	FLEXIBLE FLEXIBELE BUIS	SCHLAUCH SLANGE	030M
34		86985948		1	HOSE MANGA	MANICOTTO FLESSIBILE TUBO FLEXIVEL	FLEXIBLE FLEXIBELE BUIS	SCHLAUCH SLANGE	030M
35		86984486		1	ELBOW CODO	GOMITO JOELHO	COUDE ELLEBOOG	KNIESTÜCK VINKELROER	085G
36		86985956		1	HOSE MANGA	MANICOTTO FLESSIBILE TUBO FLEXIVEL	FLEXIBLE FLEXIBELE BUIS	SCHLAUCH SLANGE	030M
37		86985945		1	HOSE MANGA	MANICOTTO FLESSIBILE TUBO FLEXIVEL	FLEXIBLE FLEXIBELE BUIS	SCHLAUCH SLANGE	030M
38		442929A1		1	ELBOW CODO	GOMITO JOELHO	COUDE ELLEBOOG	KNIESTÜCK VINKELROER	085G
39		325137A1		1	VALVE VALVULA	VALVOLA VALVULA	VALVE VALVE	VENTIL VALVE	P468
40		844-8030		1	SCREW M8 x 30; 8.8 TORNILLO	VITE PARAFUSO	VIS SCHROEF	SCHRAUBE SKRUE	040V
41		442922A1		1	CONNECTOR, HYD. RACOR	RACCORDO IDRAULICO CONECTOR	RACCORD VERBINDING	STUTZEN FORSKRUNING	020R

TRAILER BRAKES - PNEUMATIC, COUPLERS, EXCEPT ITALY
FRENI DEL RIMORCHIO - PNEUMATICI, GIUNTI DI ACCOPPIAMENTO, TRANNE CHE PER L'ITALIA
FREINS DE REMORQUE PNEUMATIQUES - COUPLEURS, SAUF ITALIE
ANHÄNGERBREMSEN - PNEUMATISCH, KUPPLUNGEN (AUSSER ITALIEN)

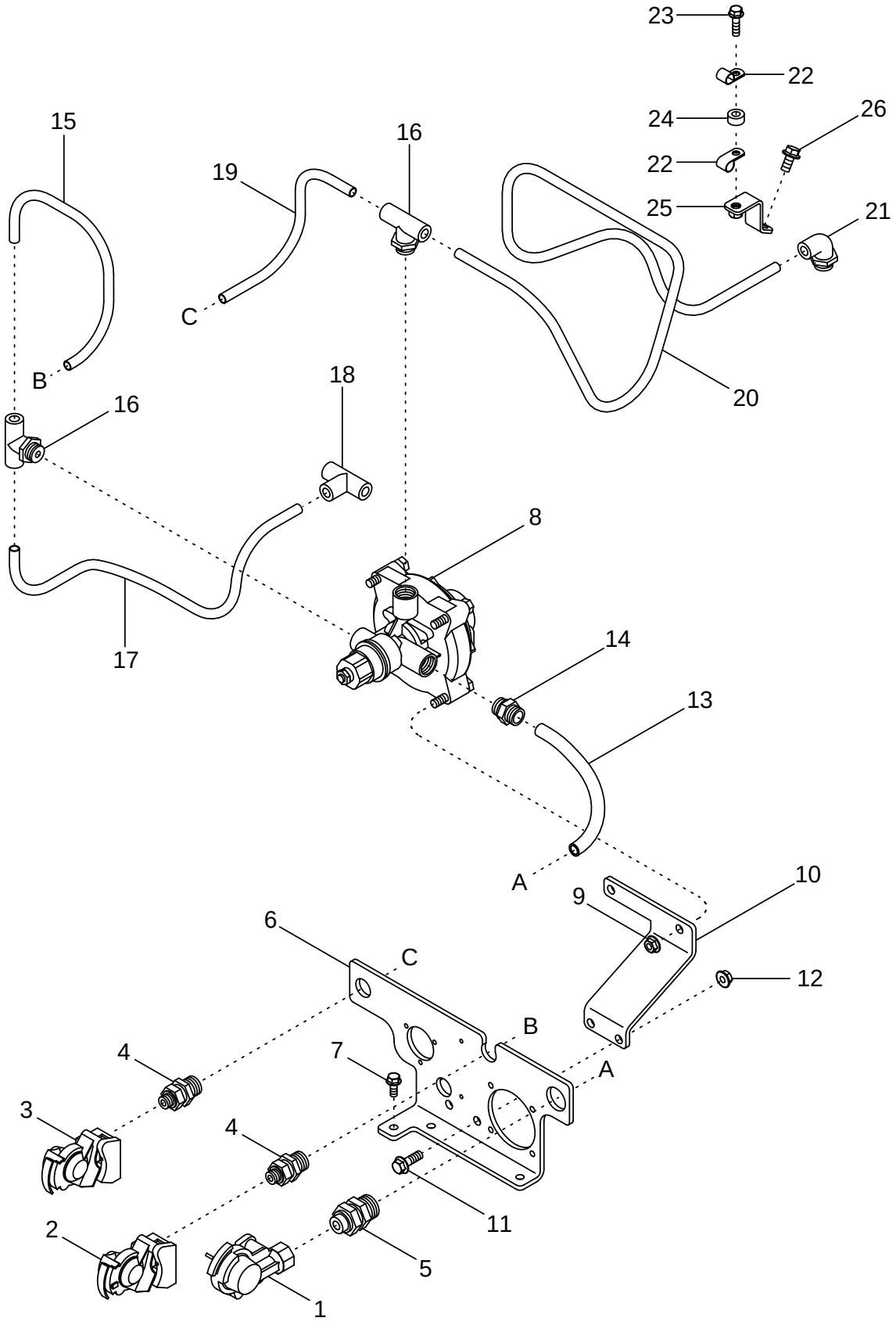

FRENOS DE REMOLQUE - NEUMÁTICOS, ACOPLADORES, EXCEPTO ITALIA
TRAVÕES DO REBOQUE PNEUMÁTICO - ACOPLADORES, EXCEPTO NA ITÁLIA
OPLEGGERREMMEN - PNEUMATISCH, KOPPELINGEN, BEHALVE ITALIË
ANHÆNGERBREMSER - TRYKLUFT, KOBLINGSANORDNINGER, UNDTAGEN ITALIEN

R	N	P.N.	MOD	Q	Description Denominacion	Descrizione Denominação	Description Beschrijving	Bezeichnung Beskrivelse	L.C.
1		3141447R1		1	COUPLING, BREAK AWAY Black				
						ATTACCO, CONTROFAS	ACCOUPLEMENT HYDR.	ABREISSKUPPLUNG	2220
					ACOPLAMIENTO	ACOPLAMENTO	COUPLING, BREAK AWA	COUPLING, BREAK AWA	
2		4304140R91		1	COUPLING, BREAK AWAY Red				
						ATTACCO, CONTROFAS	ACCOUPLEMENT HYDR.	ABREISSKUPPLUNG	2220
					ACOPLAMIENTO	ACOPLAMENTO	COUPLING, BREAK AWA	COUPLING, BREAK AWA	
3		3401424R1		1	COUPLING, BREAK AWAY Yellow				
						ATTACCO, CONTROFAS	ACCOUPLEMENT HYDR.	ABREISSKUPPLUNG	2220
					ACOPLAMIENTO	ACOPLAMENTO	COUPLING, BREAK AWA	COUPLING, BREAK AWA	
4		442909A1		2	CONNECTOR, HYD.	RACCORDO IDRAULICO	RACCORD	STUTZEN	020R
					RACOR	CONECTOR	VERBINDING	FORSKRUNING	
5		442908A1		1	CONNECTOR, HYD.	RACCORDO IDRAULICO	RACCORD	STUTZEN	020R
					RACOR	CONECTOR	VERBINDING	FORSKRUNING	
6		87413188		1	BRACKET, SUPPORTING	SQUADRETTA	EQUERRE	SCHALTER, AUTOM. AUS	215S
					PIEZA DE APOYO	PECA DE SUPORTE	DRAAGARM	STOETTEBESLAG	
7		844-8020		3	BOLT M8 x 20; 8.8	BULLONE	BOULON	SCHAUBENBOLZEN	140B
					TORNILLO	PARAFUSO	BOUT	SKRUE	
8		T101913		1	VALVE	VALVOLA	SOUPAPE	VENTIL	9620
					VALVULA	VALVULA	VALVE	VALVE	
9		825-2410		2	NUT M10	DADO	ECROU	MUTTER	010D
					TUERCA	PORCA	MOER	MØTRIK	
10		87411718		1	BRACKET	STAFFA	PATTE FIXATION	HALTERUNG	225S
					PIEZA DE SOPORTE	BRACADEIRA	STEUNBEUGEL	BESLAG	
11		844-10030		2	SCREW M10 x 30; 8.8	VITE	VIS	SCHRAUBE	P136
					TORNILLO	PARAFUSO	SCHROEF	SKRUE	
12		825-2410		2	NUT M10	DADO	ECROU	MUTTER	010D
					TUERCA	PORCA	MOER	MØTRIK	
13		86985941		1	HOSE	MANICOTTO FLESSIBILE	FLEXIBLE	SCHLAUCH	030M
					MANGA	TUBO FLEXIVEL	FLEXIBELE BUIS	SLANGE	
14		86984484		1	CONNECTION	CONNETTORE	CONNEXION	VERBINDUNG	P154
					TERMINAL	CONECTOR	CONNECTION	CONNECTION	
15		86985953		1	HOSE	MANICOTTO FLESSIBILE	FLEXIBLE	SCHLAUCH	030M
					MANGA	TUBO FLEXIVEL	FLEXIBELE BUIS	SLANGE	
16		442931A1		2	TEE	PEZZO A T	TE	T-STÜCK	9020
					RACOR-T	TE	TEE	T-STYKKE	
17		86985954		1	HOSE	MANICOTTO FLESSIBILE	FLEXIBLE	SCHLAUCH	030M
					MANGA	TUBO FLEXIVEL	FLEXIBELE BUIS	SLANGE	
18		442925A1		1	TEE	PEZZO A T	TE	T-STÜCK	9020
					RACOR-T	TE	TEE	T-STYKKE	
19		86985942		1	HOSE	MANICOTTO FLESSIBILE	FLEXIBLE	SCHLAUCH	030M
					MANGA	TUBO FLEXIVEL	FLEXIBELE BUIS	SLANGE	
20		86985950		1	HOSE	MANICOTTO FLESSIBILE	FLEXIBLE	SCHLAUCH	030M
					MANGA	TUBO FLEXIVEL	FLEXIBELE BUIS	SLANGE	
21		442929A1		1	ELBOW	GOMITO	COUDE	KNIESTÜCK	085G
					CODO	JOELHO	ELLEBOOG	VINKELROER	
22		515-22127		2	CLAMP 1/2 ID	MORSETTO	COLLIER	SCHELLE	1640
					COLLAR	BRACADEIRA	CLAMP	CLAMP	
23		844-8030		1	SCREW M8 x 30; 8.8	VITE	VIS	SCHRAUBE	040V
					TORNILLO	PARAFUSO	SCHROEF	SKRUE	

TRAILER BRAKES - PNEUMATIC, COUPLERS, EXCEPT ITALY
FRENI DEL RIMORCHIO - PNEUMATICI, GIUNTI DI ACCOPPIAMENTO, TRANNE CHE PER L'ITALIA
FREINS DE REMORQUE PNEUMATIQUES - COUPLEURS, SAUF ITALIE
ANHÄNGERBREMSEN - PNEUMATISCH, KUPPLUNGEN (AUSSER ITALIEN)

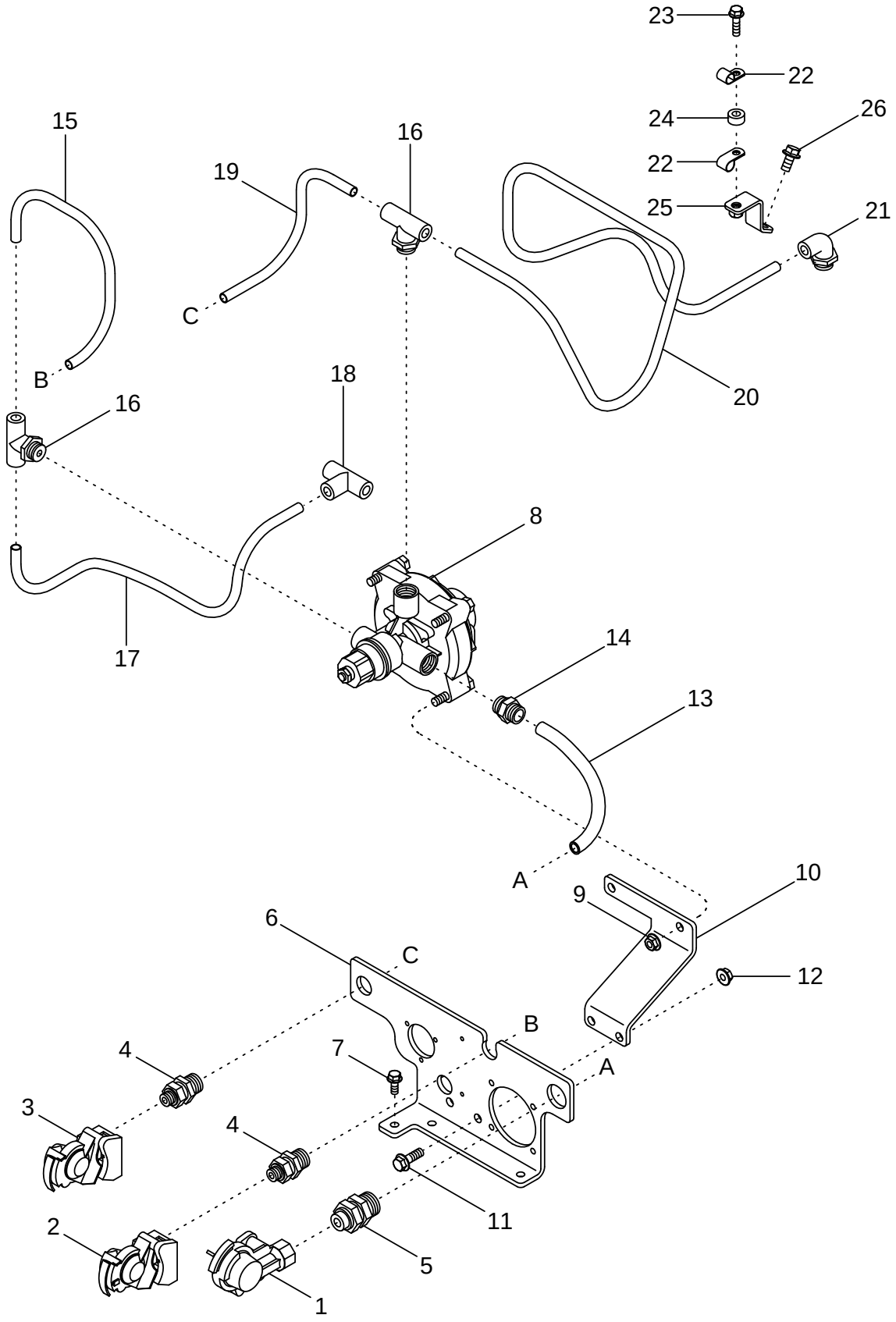

FRENOS DE REMOLQUE - NEUMÁTICOS, ACOPLADORES, EXCEPTO ITALIA
TRAVÕES DO REBOQUE PNEUMÁTICO - ACOPLADORES, EXCEPTO NA ITÁLIA
OPLEGGERREMMEN - PNEUMATISCH, KOPPELINGEN, BEHALVE ITALIË
ANHÆNGERBREMSER - TRYKLUFT, KOBLINGSANORDNINGER, UNDTAGEN ITALIEN

R	N	P.N.	MOD	Q	Description Denominacion	Descrizione Denominação	Description Beschrijving	Bezeichnung Beskrivelse	L.C.
24		176492A1		1	SPACER SEPARADOR	DISTANZIALE ESPACADOR	ENTRETOISE AFSTANDSRING	DISTANZSTÜCK AFSTANDSSTYKKE	075D
25		443761A1		1	BRACKET PIEZA DE SOPORTE	STAFFA BRACADEIRA	PATTE FIXATION STEUNBEUGEL	HALTERUNG BESLAG	225S
26		844-10020		1	SCREW M10 x 20; 8.8 TORNILLO	VITE PARAFUSO	VIS SCHROEF	SCHRAUBE SKRUE	7450

TRAILER BRAKES - PNEUMATIC, COUPLERS, ITALY ONLY
FRENI DEL RIMORCHIO - PNEUMATICI, GIUNTI DI ACCOPPIAMENTO, SOLO PER L'ITALIA
FREINS DE REMORQUE PNEUMATIQUES -COUPLEURS, ITALIE UNIQUEMENT
ANHÄNGERBREMSEN - PNEUMATISCH, KUPPLUNGEN (NUR ITALIEN)

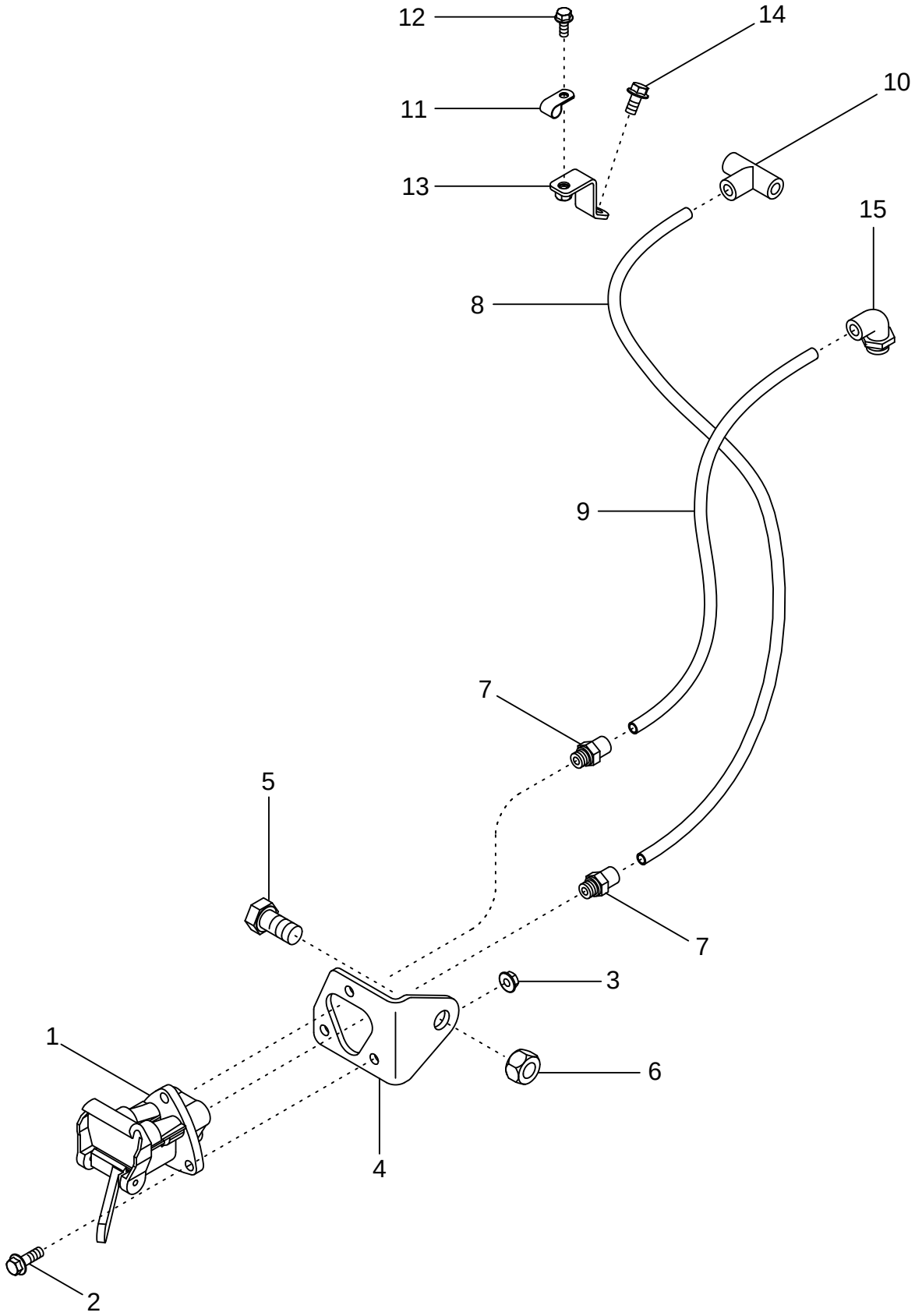

FRENOS DE REMOLQUE - NEUMÁTICOS, ACOPLADORES, SÓLO ITALIA
TRAVÕES DO REBOQUE PNEUMÁTICO - ACOPLADORES, APENAS NA ITÁLIA
OPLEGGERREMMEN, PNEUMATISCH, KOPPELINGEN, UITSLUITEND ITALIË
ANHÆNGERBREMSER - TRYKLUFT, KOBLINGSANORDNINGER, KUN ITALIEN

R	N	P.N.	MOD	Q	Description Denominacion	Descrizione Denominação	Description Beschrijving	Bezeichnung Beskrivelse	L.C.
1		82016630		1	COUPLING, PUSH-PULL ACOPLAMIENTO RÁPIDO	ATTACCO,CONTROFASE ACOPLAMENTO RÁPIDO	ACCOUPLEMENT RAP. COUPLING, PUSH-PULL	ABREISSKUPPLUNG SKUB/TRÆK KOBLING	P890
2		844-10030		3	SCREW M10 x 30; 8.8 TORNILLO	VITE PARAFUSO	VIS SCHROEF	SCHRAUBE SKRUE	P136
3		825-2410		3	NUT M10 TUERCA	DADO PORCA	ECROU MOER	MUTTER MØTRIK	010D
4		86993175		1	BRACKET PIEZA DE SOPORTE	STAFFA BRACADEIRA	PATTE FIXATION STEUNBEUGEL	HALTERUNG BESLAG	225S
5		614-20040		1	SCREW M20 x 40; 8.8 TORNILLO	VITE PARAFUSO	VIS SCHROEF	SCHRAUBE SKRUE	7450
6		825-1020		1	NUT M20 TUERCA	DADO PORCA	ECROU MOER	MUTTER MØTRIK	5780
7		442923A1		2	CONNECTION TERMINAL	CONNETTORE CONECTOR	CONNEXION CONNECTION	VERBINDUNG CONNECTION	P154
8		86993176		1	HOSE MANGA	MANICOTTO FLESSIBILE TUBO FLEXIVEL	FLEXIBLE FLEXIBELE BUIS	SCHLAUCH SLANGE	030M
9		86993177		1	HOSE MANGA	MANICOTTO FLESSIBILE TUBO FLEXIVEL	FLEXIBLE FLEXIBELE BUIS	SCHLAUCH SLANGE	030M
10		442925A1		1	TEE RACOR-T	PEZZO A T TE	TE TEE	T-STÜCK T-STYKKE	9020
11		515-22127		1	CLAMP 1/2 ID COLLAR	MORSETTO BRACADEIRA	COLLIER CLAMP	SCHELLE CLAMP	1640
12		844-8020		1	BOLT M8 x 20; 8.8 TORNILLO	BULLONE PARAFUSO	BOULON BOUT	SCHAUBENBOLZEN SKRUE	140B
13		443761A1		1	BRACKET PIEZA DE SOPORTE	STAFFA BRACADEIRA	PATTE FIXATION STEUNBEUGEL	HALTERUNG BESLAG	225S
14		844-10020		1	SCREW M10 x 20; 8.8 TORNILLO	VITE PARAFUSO	VIS SCHROEF	SCHRAUBE SKRUE	7450
15		442929A1		1	ELBOW CODO	GOMITO JOELHO	COUDE ELLEBOOG	KNIESTÜCK VINKELROER	085G

SECTION INDEX

08-01	HYDRAULIC SYSTEM - OIL COOLER
08-02	HYDRAULIC SYSTEM - 3RD OIL COOLER
08-03	HYDRAULIC SYSTEM - CHARGE PUMP
08-04	HYDRAULIC SYSTEM - PISTON PUMP AND FILTER, STANDARD FLOW CAPACITY
08-05	HYDRAULIC SYSTEM - PISTON PUMP AND FILTER, HIGH FLOW CAPACITY
08-06	HYDRAULIC SYSTEM - REGULATED PRESSURE
08-07	HYDRAULIC SYSTEM - CREEP SPEED
08-08	HYDRAULIC SYSTEM - TRANSMISSION LUBE
08-09	HYDRAULIC SYSTEM - HITCH
08-10	HYDRAULIC LIFT LINK - HITCH, RIGHT HAND
08-11	HYDRAULIC SYSTEM - FRONT HITCH
08-12	HYDRAULIC SYSTEM - PTO/DIFFERENTIAL LOCK VALVE
08-13	HYDRAULIC SYSTEM - REMOTE COUPLERS
08-14	HYDRAULIC SYSTEM - POWER BEYOND
08-15	HYDRAULIC SYSTEM - MOTOR RETURN
08-16	PRIORITY AND REGULATOR VALVE ASSEMBLY
08-17	PTO AND DIFFERENTIAL LOCK VALVE ASSEMBLY
08-18	REMOTE HYDRAULIC VALVE STACK
08-19	MANIFOLD VALVE ASSEMBLY
08-20	REMOTE HYDRAULIC CONTROL VALVE
08-21	HITCH VALVE ASSEMBLY
08-22	REMOTE HYDRAULIC COUPLING MOUNTING
08-23	REMOTE HYDRAULIC COUPLINGS
08-24	CYLINDER ASSEMBLY - HITCH (305022A2)
08-25	CYLINDER ASSY - HITCH (278277A3)
08-26	CYLINDER ASSEMBLY - HITCH (278419A3)
08-27	POWER BEYOND VALVE ASSEMBLY

08-01		p1	09/04

HYDRAULIC SYSTEM - OIL COOLER
IMPIANTO IDRAULICO - SCAMBIATORE DI CALORE DELL'OLIO
CIRCUIT HYDRAULIQUE - REFROIDISSEUR D'HUILE
HYDRAULIKANLAGE - ÖLKÜHLER

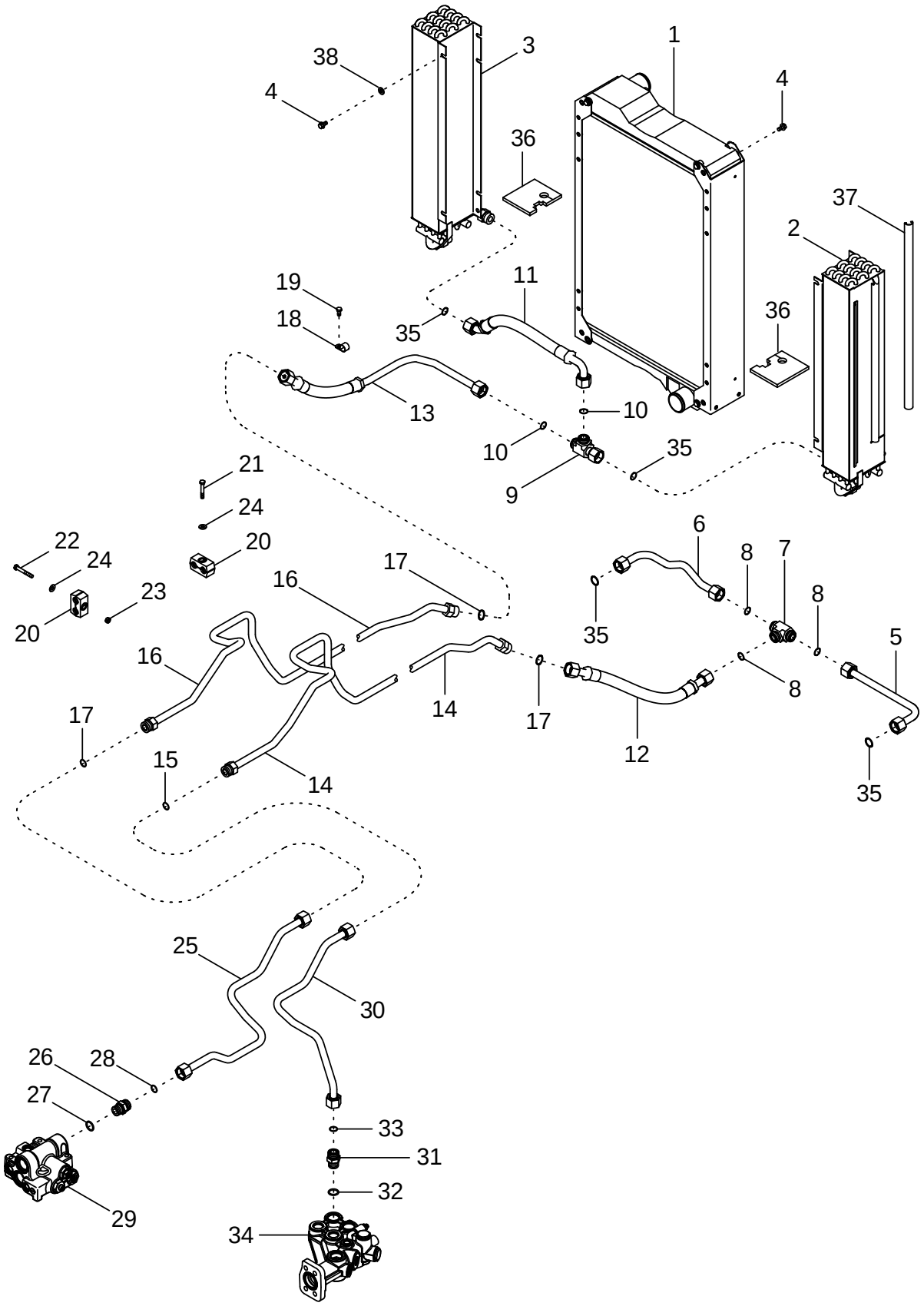

SISTEMA HIDRÁULICO - REFRIGERADOR DE ACEITE
SISTEMA HIDRÁULICO - ARREFECEDOR DO ÓLEO
HYDRAULISCH SYSTEEM - OLIEKOELER
HYDRAULIKSYSTEM - OLIEKØLER

R	N	P.N.	MOD	Q	Description Denominacion	Descrizione Denominação	Description Beschrijving	Bezeichnung Beskrivelse	L.C.
1	1	REF		1	INSTRUCTION Radiator MANUAL	ISTRUZIONI INSTRUCAO	NOTICE INSTRUCTION	HINWEIS SKO, INDRE	Z571
2		435633A2		1	COOLER ASSY. Right Hanc ENFRIADOR (CONJUNT(	REFRIGERATORE RADIADOR CONJUNTO	REFRIGERANT COOLER ASSY.	KUEHLER (KPLT.) COOLER ASSY.	P495
3		435629A2		1	COOLER ASSY. Left Hand ENFRIADOR (CONJUNT(	REFRIGERATORE RADIADOR CONJUNTO	REFRIGERANT COOLER ASSY.	KUEHLER (KPLT.) COOLER ASSY.	P495
4		844-8016		6	SCREW M8 x 16; 8.8 TORNILLO	VITE PARAFUSO	VIS SCHROEF	SCHRAUBE SKRUE	7450
5		300904A2		1	PIPE Right Hand CUELLO DE CARGA	TUBO TUBO DE ENCHIMENTO	TUYAU OPVULPIJP	ROHR PAAFYLDNINGSSTUDS	6240
6		300903A2		1	PIPE Left Hand CUELLO DE CARGA	TUBO TUBO DE ENCHIMENTO	TUYAU OPVULPIJP	ROHR PAAFYLDNINGSSTUDS	6240
7		701-427		1	TEE 1-3/16 fc sl , Inc. 8 RACOR-T	PEZZO A T TE	TE TEE	T-STÜCK T-STYKKE	9020
8		238-6018		3	O-RING 3/4 ID x 1/16 JUNTA HERMETICA	ANELLO TOROIDALE ANEL O	JOINT TORIQUE O-RING	O-RING O-RING	7176
9		701-417		1	TEE 1-3/16 fc sl x 1-3/16 sw, Inc. 10 RACOR-T	PEZZO A T TE	TE TEE	T-STÜCK T-STYKKE	9020
10		238-6018		2	O-RING 3/4 ID x 1/16 JUNTA HERMETICA	ANELLO TOROIDALE ANEL O	JOINT TORIQUE O-RING	O-RING O-RING	7176
11		313315A2		1	HOSE MANGA	MANICOTTO FLESSIBILE TUBO FLEXIVEL	FLEXIBLE FLEXIBELE BUIS	SCHLAUCHMUFFE SLANGE	4480
12		301020A2		1	HOSE Supply MANGA	MANICOTTO FLESSIBILE TUBO FLEXIVEL	FLEXIBLE FLEXIBELE BUIS	SCHLAUCHMUFFE SLANGE	4480
13		301430A2		1	HOSE Return MANGA	MANICOTTO FLESSIBILE TUBO FLEXIVEL	FLEXIBLE FLEXIBELE BUIS	SCHLAUCHMUFFE SLANGE	4480
14		433388A1		1	PIPE Supply CUELLO DE CARGA	TUBO TUBO DE ENCHIMENTO	TUYAU OPVULPIJP	ROHR PAAFYLDNINGSSTUDS	200T
15		238-6018		2	O-RING 3/4 ID x 1/16 JUNTA HERMETICA	ANELLO TOROIDALE ANEL O	JOINT TORIQUE O-RING	O-RING O-RING	7176
16		433387A1		1	PIPE Return, Without Front Hitch CUELLO DE CARGA	TUBO TUBO DE ENCHIMENTO	TUYAU OPVULPIJP	ROHR PAAFYLDNINGSSTUDS	200T
16		433158A1		1	SEAL Return, With Front Hitch ANILLO DE CIERRE	ANELLO DI TENUTA ANEL DE VEDACAO	JOINT DICHTINGSRING	DICHTUNG PAKNINGSRING	7460
17		238-6018		2	O-RING 3/4 ID x 1/16 JUNTA HERMETICA	ANELLO TOROIDALE ANEL O	JOINT TORIQUE O-RING	O-RING O-RING	7176
18		515-22190		1	CLAMP 3/4 ID COLLAR	MORSETTO BRACADEIRA	COLLIER CLAMP	SCHELLE CLAMP	1640
19		614-8016		1	SCREW M8 x 16; 8,8 TORNILLO	VITE PARAFUSO	VIS SCHROEF	SCHRAUBE SKRUE	P136
20		314137A1		2	COLLAR CLAMP ARGOLLA DE CIERRE	MORSETTO DEL COLLAI BRACADEIRA	COLLIER-DE-SERRAGE COLLAR CLAMP	KRAGENSCHELLE COLLAR CLAMP	P150
21		814-8050		1	SCREW M8 x 50; 8,8 TORNILLO	VITE PARAFUSO	VIS SCHROEF	SCHRAUBE SKRUE	P136

(1) See Figure 02-02

HYDRAULIC SYSTEM - OIL COOLER
IMPIANTO IDRAULICO - SCAMBIATORE DI CALORE DELL'OLIO
CIRCUIT HYDRAULIQUE - REFROIDISSEUR D'HUILE
HYDRAULIKANLAGE - ÖLKÜHLER

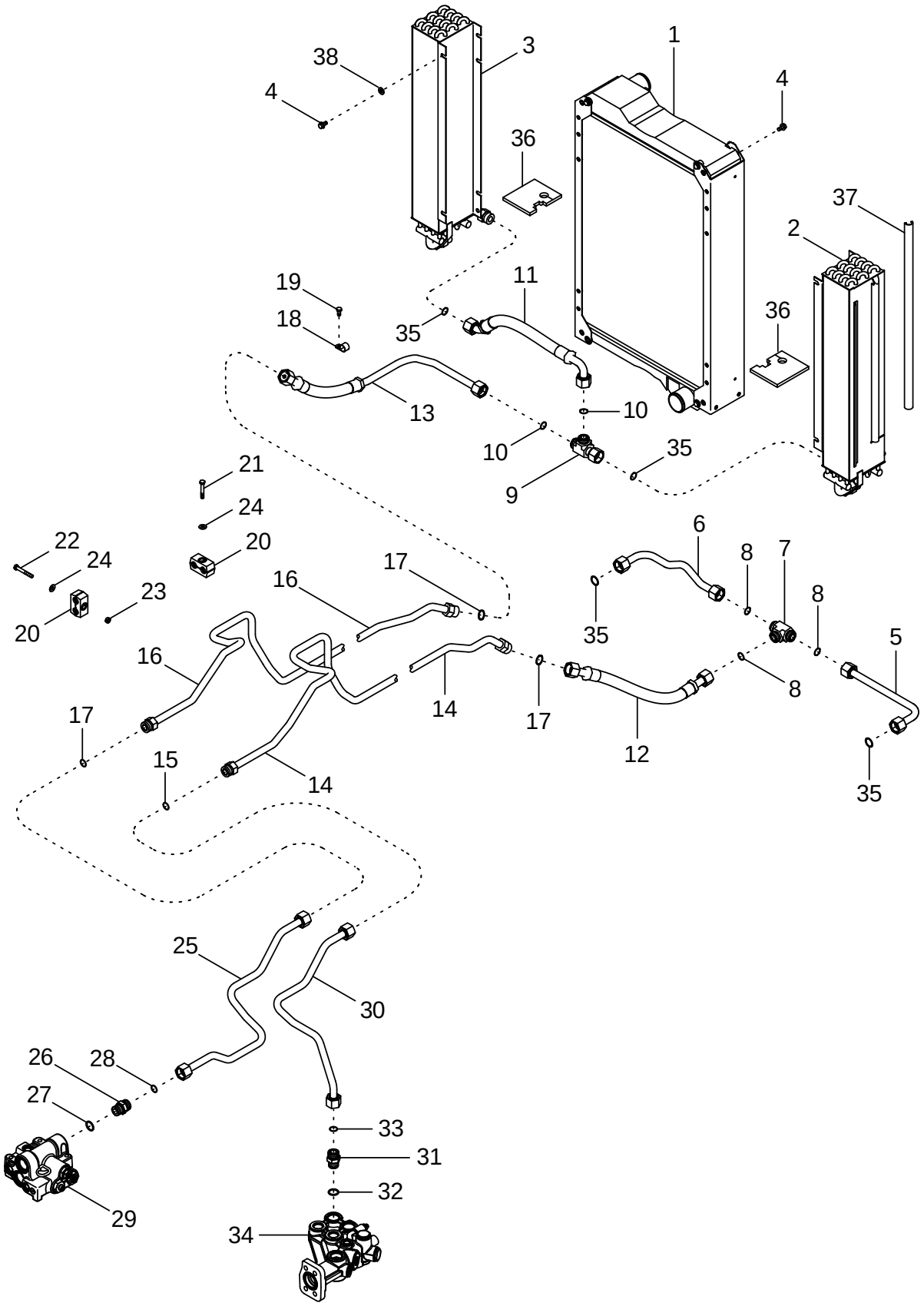

SISTEMA HIDRÁULICO - REFRIGERADOR DE ACEITE
SISTEMA HIDRÁULICO - ARREFECEDOR DO ÓLEO
HYDRAULISCH SYSTEEM - OLIEKOELER
HYDRAULIKSYSTEM - OLIEKØLER

R	N	P.N.	MOD	Q	Description Denominacion	Descrizione Denominação	Description Beschrijving	Bezeichnung Beskrivelse	L.C.
22		814-8060		1	SCREW M8 x 60; 8.8 TORNILLO	VITE PARAFUSO	VIS SCHROEF	SCHRAUBE SKRUE	040V
23		829-1408		1	NUT M8; 10 TUERCA	DADO PORCA	ECROU MOER	MUTTER MØTRIK	010D
24		895-15008		2	WASHER 9 x 20 x 1,6 mm ARANDELA	ROSETTA PIANA ANILHA	RONDELLE SLUITRING	SCHEIBE FLADSKIVE	9720
25		433586A1		1	TUBE ASSY. Supply TUBO (CONJUNTO)	TUBO, COMPLESSIVO TUBO CONJUNTO	TUYAUTERIE TUBE ASSY.	ROHRLEITUNG TUBE ASSY.	P465
26		700-104		1	FITTING 1-3/16 fc sl x 27 Or, Inc. 27, 28 CONEXION	RACCORDO CONEXAO	RACCORD FITTING	ANSCHLUSSSTÜCK FITTING	3300
27		637-64236		1	O-RING 23,6 ID x 2,9 JUNTA HERMETICA	ANELLO TOROIDALE ANEL O	JOINT TORIQUE O-RING	O-RING O-RING	7176
28		238-6018		1	O-RING 3/4 ID x 1/16 JUNTA HERMETICA	ANELLO TOROIDALE ANEL O	JOINT TORIQUE O-RING	O-RING O-RING	7176
29	1	404438A5	a	1	VALVE Priority VALVULA	VALVOLA VALVULA	SOUPAPE VALVE	VENTIL VALVE	9620
29	1	87427822	b	1	VALVE Priority VALVULA	VALVOLA VALVULA	SOUPAPE VALVE	VENTIL VALVE	9620
30		451061A1		1	TUBE ASSY. Return TUBO (CONJUNTO)	TUBO, COMPLESSIVO TUBO CONJUNTO	TUYAUTERIE TUBE ASSY.	ROHRLEITUNG TUBE ASSY.	P465
31		700-104		1	FITTING 1-3/16 fc sl x 27 Or, Inc. 32, 33 CONEXION	RACCORDO CONEXAO	RACCORD FITTING	ANSCHLUSSSTÜCK FITTING	3300
32		637-64236		1	O-RING 23,6 ID x 2,9 JUNTA HERMETICA	ANELLO TOROIDALE ANEL O	JOINT TORIQUE O-RING	O-RING O-RING	7176
33		238-6018		2	O-RING 3/4 ID x 1/16 JUNTA HERMETICA	ANELLO TOROIDALE ANEL O	JOINT TORIQUE O-RING	O-RING O-RING	7176
34		401600A1		1	HEAD ASSY. Filter CABEZA (CONJUNTO)	TESTA, COMPLESSIVO CABECA CONJUNTO	TETE (ASSEMBLEE) HEAD ASSY.	KOPF (KPLT.) HEAD ASSY.	P605
35		238-6018		4	O-RING 3/4 ID x 1/16 JUNTA HERMETICA	ANELLO TOROIDALE ANEL O	JOINT TORIQUE O-RING	O-RING O-RING	7176
36		329701A1		2	SEAL ANILLO DE CIERRE	ANELLO DI TENUTA ANEL DE VEDACAO	JOINT DICHTINGSRING	DICHTUNG PAKNINGSRING	7460
37		328134A1		2	GUIDE GUIA	GUIDA GUIA	GUIDE GELEIDER	FUEHRUNG STYR	4060
28		895-15008		6	WASHER 9 x 20 x 1,6 mm ARANDELA	ROSETTA PIANA ANILHA	RONDELLE SLUITRING	SCHEIBE FLADSKIVE	9720

(1) See Figure 08-16
(a) BSN AJB0304793
(b) ASN AJB0304793

08-02		p1	12/02

HYDRAULIC SYSTEM - 3RD OIL COOLER
IMPIANTO IDRAULICO - TERZO SCAMBIATORE DI CALORE DELL'OLIO
CIRCUIT HYDRAULIQUE - 3ÈME REFROIDISSEUR D'HUILE
HYDRAULIKANLAGE - 3. ÖLKÜHLER

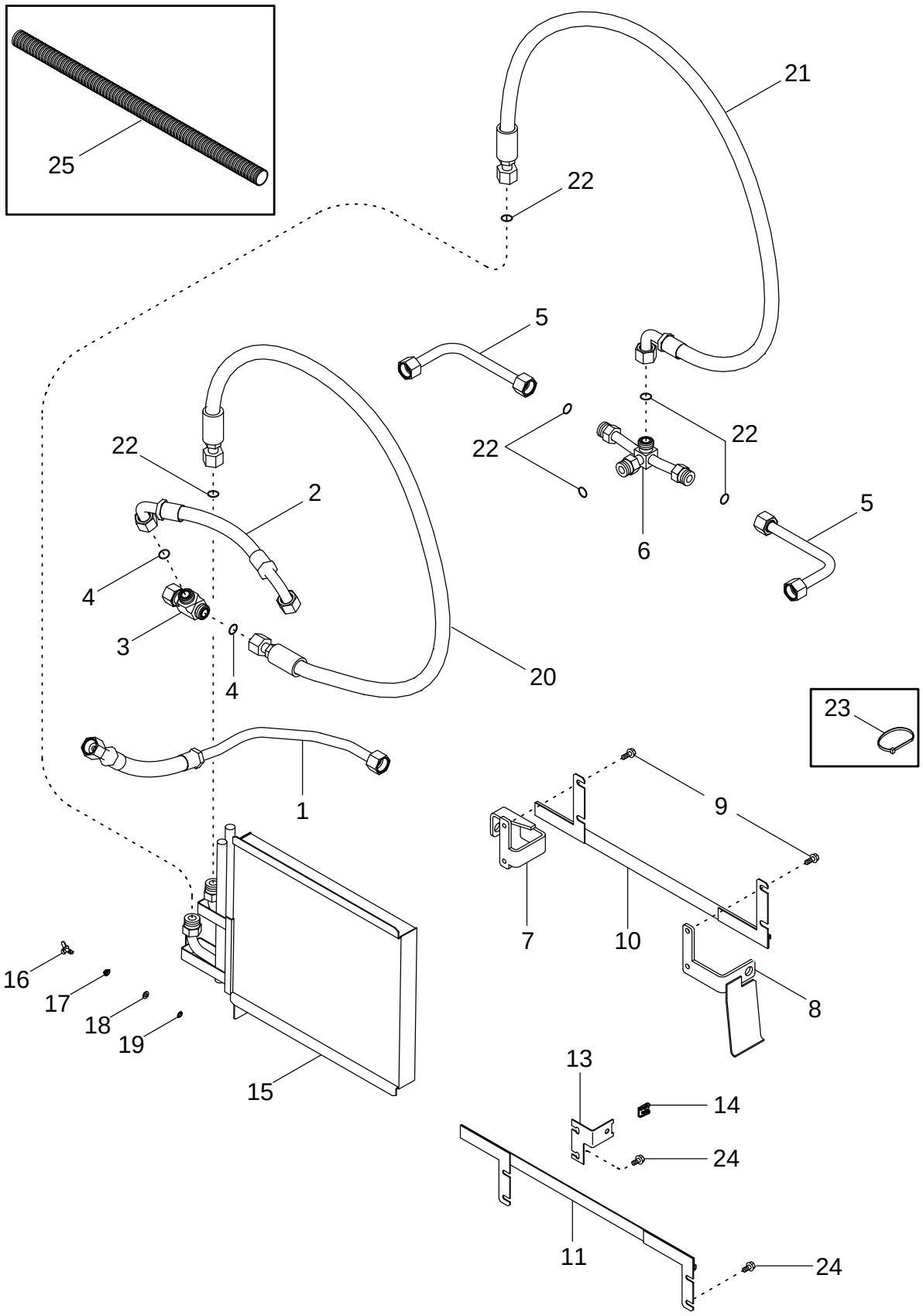

SISTEMA HIDRÁULICO - 3ER REFRIGERADOR DE ACEITE
SISTEMA HIDRÁULICO - 3º ARREFECEDOR DO ÓLEO
HYDRAULISCH SYSTEEM - 3E OLIEKOELER
HYDRAULIKSYSTEM - 3. OLIEKØLER

R	N	P.N.	MOD	Q	Description Denominacion	Descrizione Denominação	Description Beschrijving	Bezeichnung Beskrivelse	L.C.
1		87410071		1	HOSE ASSY. MANGUERA (CONJUNTO	GRUPPO TUBO FLESS MANGUEIRA CONJUNTO	FLEXIBLE (ASSEMBLE) HOSE ASSY.	SCHLAUCH (KPLT.) HOSE ASSY.	P457
2		416025A2		1	HOSE ASSY. MANGUERA (CONJUNTO	GRUPPO TUBO FLESS MANGUEIRA CONJUNTO	FLEXIBLE (ASSEMBLE) HOSE ASSY.	SCHLAUCH (KPLT.) HOSE ASSY.	P457
3		701-417		1	TEE 1-3/16 fc sl x 1-3/16 sw, Inc. 4 RACOR-T	PEZZO A T TE	TE TEE	T-STÜCK T-STYKKE	9020
4		238-6018		2	O-RING 3/4 ID x 1/16 JUNTA HERMETICA	ANELLO TOROIDALE ANEL O	JOINT TORIQUE O-RING	O-RING O-RING	7176
5		430167A2		2	TUBE ASSY. TUBO (CONJUNTO)	TUBO, COMPLESSIVO TUBO CONJUNTO	TUYAUTERIE TUBE ASSY.	ROHRLEITUNG TUBE ASSY.	P465
6		414916A4		1	TUBE ASSY. TUBO (CONJUNTO)	TUBO, COMPLESSIVO TUBO CONJUNTO	TUYAUTERIE TUBE ASSY.	ROHRLEITUNG TUBE ASSY.	P465
7		414601A2		1	BRACKET PIEZA DE SOPORTE	STAFFA BRACADEIRA	PATTE FIXATION STEUNBEUGEL	HALTERUNG BESLAG	225S
8		416300A1		1	BRACKET PIEZA DE SOPORTE	STAFFA BRACADEIRA	PATTE FIXATION STEUNBEUGEL	HALTERUNG BESLAG	225S
9		844-8020		4	BOLT M8 x 20; 8.8 TORNILLO	BULLONE PARAFUSO	BOULON BOUT	SCHAUBENBOLZEN SKRUE	140B
10		416400A2		1	BRACKET Upper PIEZA DE SOPORTE	STAFFA BRACADEIRA	PATTE FIXATION STEUNBEUGEL	HALTERUNG BESLAG	225S
11		416401A2		1	BRACKET Lower PIEZA DE SOPORTE	STAFFA BRACADEIRA	PATTE FIXATION STEUNBEUGEL	HALTERUNG BESLAG	225S
		430396A1		1	BRACKET Inc.13, 14 PIEZA DE SOPORTE	STAFFA BRACADEIRA	PATTE FIXATION STEUNBEUGEL	HALTERUNG BESLAG	225S
13		416403A2		1	BRACKET PIEZA DE SOPORTE	STAFFA BRACADEIRA	PATTE FIXATION STEUNBEUGEL	HALTERUNG BESLAG	225S
14		419210A1		1	CLIP, SPRING SUJETADOR DE RESOR	MOLLETTA DI FISSAGGI FIXADOR DE MOLA	ATTACHE A RESSORT VEERKLEM	FEDERKLAMMER FJEDERKLEMME	105M
15		409218A1		1	COOLER, OIL RADIADOR ACEITE	RADIATORE OLIO ARREFECEDOR	REFROIDISSEUR D'HUIL RADIATOR	ÖLKÜHLER OLIEKØLER	026R
16		419207A1		1	STUD ESPARRAGO	PRIGIONIERO PRISIONEIRO	GOUJON STUD	STEHBOLZEN STUD	P521
17		196548C1		1	SPRING RESORTE	MOLLA MOLA	RESSORT VEER	FEDER FJEDER	100M
18		419212A1		1	WASHER ARANDELA	ROSETTA PIANA ANILHA	RONDELLE SLUITRING	BEILAGSCHEIBE FLADSKIVE	131R
19		419211A1		1	RETAINER RETENEDOR	RITEGNO RETENTOR	RETENEUR HOUDER	HALTEVORRICHTUNG HOLDER	109R
20		416249A2		1	HOSE ASSY. Supply MANGUERA (CONJUNTO	GRUPPO TUBO FLESS MANGUEIRA CONJUNTO	FLEXIBLE (ASSEMBLE) HOSE ASSY.	SCHLAUCH (KPLT.) HOSE ASSY.	P457
21		416250A2		1	HOSE ASSY. Return MANGUERA (CONJUNTO	GRUPPO TUBO FLESS MANGUEIRA CONJUNTO	FLEXIBLE (ASSEMBLE) HOSE ASSY.	SCHLAUCH (KPLT.) HOSE ASSY.	P457
22		238-6018		6	O-RING 3/4 ID x 1/16 JUNTA HERMETICA	ANELLO TOROIDALE ANEL O	JOINT TORIQUE O-RING	O-RING O-RING	7176
23		A169433		3	STRAP, SECURING CORREA DE FIJACION	CINGHIA DI FISSAGGIO CORREIA DE FIXACAO	SANGLE DE FIXATION 'BORGRIEM	SICHERUNGSRIEMEN FASTSPAENDINGSSTRC	172C
24		844-8016		2	SCREW M8 x 16; 8.8 TORNILLO	VITE PARAFUSO	VIS SCHROEF	SCHRAUBE SKRUE	7450

08-02		p2	12/02

HYDRAULIC SYSTEM - 3RD OIL COOLER
IMPIANTO IDRAULICO - TERZO SCAMBIATORE DI CALORE DELL'OLIO
CIRCUIT HYDRAULIQUE - 3ÈME REFROIDISSEUR D'HUILE
HYDRAULIKANLAGE - 3. ÖLKÜHLER

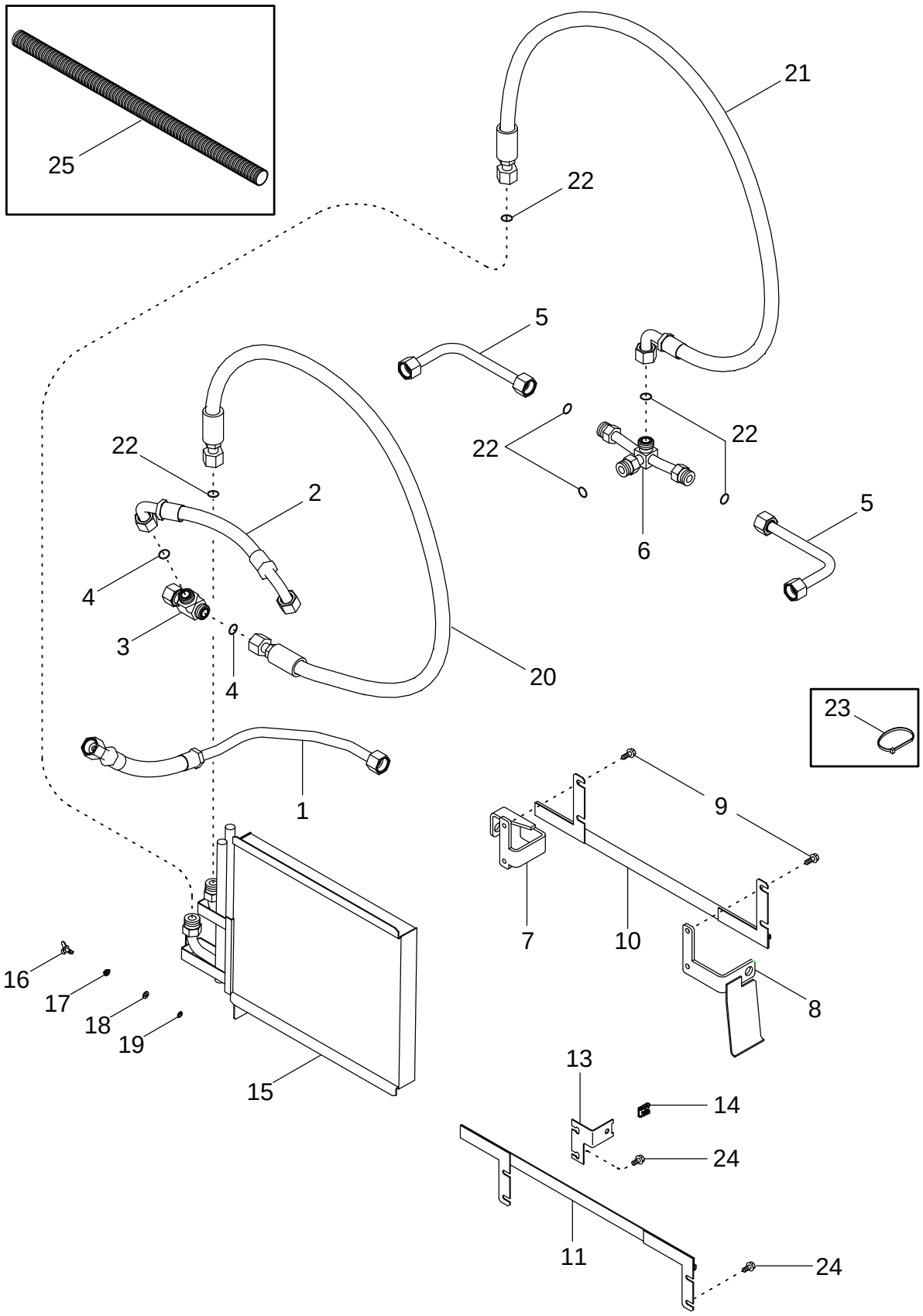

SISTEMA HIDRÁULICO - 3ER REFRIGERADOR DE ACEITE
SISTEMA HIDRÁULICO - 3º ARREFECEDOR DO ÓLEO
HYDRAULISCH SYSTEEM - 3E OLIEKOELER
HYDRAULIKSYSTEM - 3. OLIEKØLER

R	N	P.N.	MOD	Q	Description Denominacion	Descrizione Denominação	Description Beschrijving	Bezeichnung Beskrivelse	L.C.
25		398610A1		2	CONDUIT TUBERIA	CONDOTTA CONDUITE	CONDUIT CONDUIT	LEITUNG RENDE	1920

HYDRAULIC SYSTEM - CHARGE PUMP
IMPIANTO IDRAULICO - POMPA DI CARICA
CIRCUIT HYDRAULIQUE - POMPE DE CHARGE
HYDRAULIKANLAGE - SPEISEPUMPE

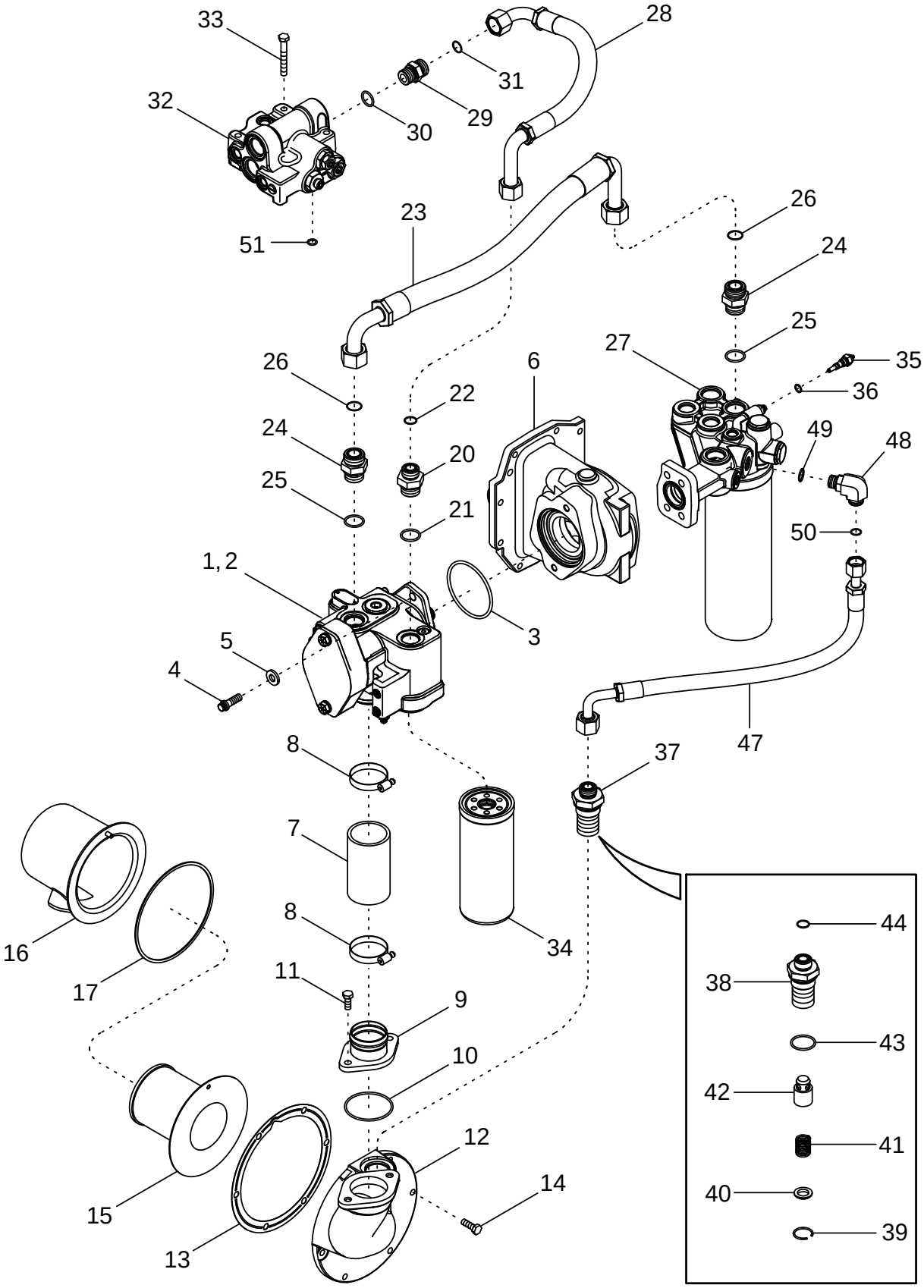

SISTEMA HIDRÁULICO - BOMBA DE CARGA
BOMBA DE CARGA DO SISTEMA HIDRÁULICO
HYDRAULISCH SYSTEEM - LAADPOMP
HYDRAULIKSYSTEM - FØDEPUMPE

R	N	P.N.	MOD	Q	Description Denominacion	Descrizione Denominação	Description Beschrijving	Bezeichnung Beskrivelse	L.C.
1		401363A3		1	PUMP charge, Inc. 2 BOMBA	POMPA BOMBA	POMPE PUMP	PUMPE PUMPE	6570
2		87407008		1	KIT, SERVICE KIT, SERVICE	KIT ASSISTENZIALE KIT, SERVICE	KIT ASSISTANCE KIT, SERVICE	WARTUNGSSATZ SERVICE SAET	021K
3		238-5345		1	O-RING 4 ID x 3/16 JUNTA HERMETICA	ANELLO TOROIDALE O-RING	JOINT THORIQUE O-RING	DICHTRING O-RING	055A
4		615-12035		2	SCREW M12 x 35; 8,8 TORNILLO	VITE PARAFUSO	VIS SCHROEF	SCHRAUBE SKRUE	040V
5		896-16012		2	WASHER 13,5 x 28 x 4 mm ARANDELA	ROSETTA PIANA ANILHA	RONDELLE SLUITRING	SCHEIBE FLADSKIVE	9720
6	1	389550A1		1	HOUSING CAVIDAD	ALLOGGIAMENTO ALOJAMENTO	CARTER HUIS	GEHÄUSE HUS	014V
7		407386A1		1	HOSE MANGA	MANICOTTO FLESSIBILE TUBO FLEXIVEL	FLEXIBLE FLEXIBELE BUIS	SCHLAUCH SLANGE	030M
8		214-1448		2	CLAMP 2-9/16 - 3-1/2 COLLAR	MORSETTO BRACADEIRA	COLLIER CLAMP	SCHELLE CLAMP	1640
9		407364A1		1	ADAPTER ADAPTOR	ADATTATORE ADAPTOR	ADAPTEUR VERLOOPSTUK	ADAPTER ADAPTER	001A
10		238-5235		1	O-RING 3-1/8 ID x 1/8 JUNTA HERMETICA	ANELLO TOROIDALE ANEL O	JOINT TORIQUE O-RING	O-RING O-RING	7176
11		627-10025		2	SCREW M10 x 25; 10.9 TORNILLO	VITE PARAFUSO	VIS SCHROEF	SCHRAUBE SKRUE	7450
12		403416A1		1	BASE APOYO	BASE BASE	SOCLE BASIS	SOCKEL BUNDPLADE	021B
13		139241C5		1	GASKET JUNTA HERMETICA	GUARNIZIONE JUNTA	JOINT DICHTINGSSTUK	DICHTUNG, FLACH PAKNING	123G
14		628-10030		6	SCREW M10 x 30; 10.9 TORNILLO	VITE PARAFUSO	VIS SCHROEF	SCHRAUBE SKRUE	7450
15		1348335C1		1	SCREEN CERNIDOR (CONJUNTO	VAGLIO TELA	TAMIS SCREEN	SIEB SCREEN	P584
16		1348337C1		1	SHROUD Includes 17 BOQUILLA	RIPARO COBERTURA	BUSE SHROUD	ABSCHIRMUNG DÆKKE	7830
17		1342641C1		1	GASKET JUNTA HERMETICA	GUARNIZIONE JUNTA	JOINT DICHTINGSSTUK	DICHTUNG, FLACH PAKNING	123G
20		700-164		1	FITTING 1-3/16 fc sl x 33 Or, Inc. 21, 22 CONEXION	RACCORDO CONEXAO	RACCORD FITTING	ANSCHLUSSSTÜCK FITTING	3300
21		637-64296		1	O-RING 29,6 ID x 2,9 JUNTA HERMETICA	ANELLO TOROIDALE ANEL O	JOINT TORIQUE O-RING	O-RING O-RING	7176
22		238-6018		1	O-RING 3/4 ID x 1/16 JUNTA HERMETICA	ANELLO TOROIDALE ANEL O	JOINT TORIQUE O-RING	O-RING O-RING	7176
23		451064A1		1	HOSE MANGA	MANICOTTO FLESSIBILE TUBO FLEXIVEL	FLEXIBLE FLEXIBELE BUIS	SCHLAUCH SLANGE	030M
24		700-105		2	CONNECTOR, HYD. 1-7/16 fc sl x 33 Or, Inc. 25, 26 RACOR	RACCORDO IDRAULICO CONECTOR	RACCORD VERBINDING	STUTZEN FORSKRUNING	020R
25		637-64296		1	O-RING 29,6 ID x 2,9 JUNTA HERMETICA	ANELLO TOROIDALE ANEL O	JOINT TORIQUE O-RING	O-RING O-RING	7176

(1) See Figure 06-39

HYDRAULIC SYSTEM - CHARGE PUMP
IMPIANTO IDRAULICO - POMPA DI CARICA
CIRCUIT HYDRAULIQUE - POMPE DE CHARGE
HYDRAULIKANLAGE - SPEISEPUMPE

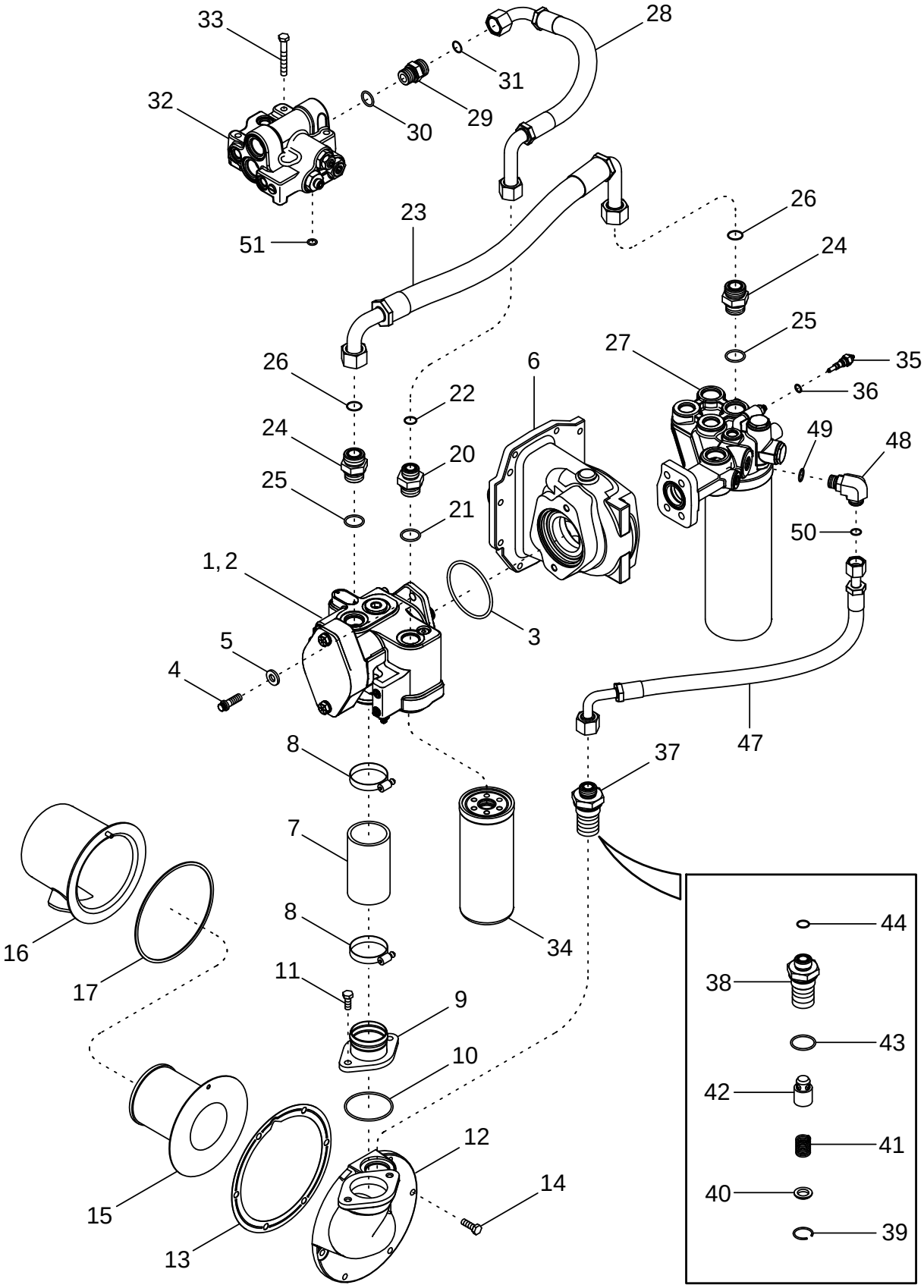

SISTEMA HIDRÁULICO - BOMBA DE CARGA
BOMBA DE CARGA DO SISTEMA HIDRÁULICO
HYDRAULISCH SYSTEEM - LAADPOMP
HYDRAULIKSYSTEM - FØDEPUMPE

R	N	P.N.	MOD	Q	Description Denominacion	Descrizione Denominação	Description Beschrijving	Bezeichnung Beskrivelse	L.C.
26		238-6021		1	O-RING 15/16 ID x 1/16 JUNTA HERMETICA	ANELLO TOROIDALE ANEL O	JOINT TORIQUE O-RING	O-RING O-RING	7176
27		401600A1		1	HEAD ASSY. Filter CABEZA (CONJUNTO)	TESTA, COMPLESSIVO CABECA CONJUNTO	TETE (ASSEMBLEE) HEAD ASSY.	KOPF (KPLT.) HEAD ASSY.	P605
28		433585A1		1	HOSE ASSY. MANGUERA (CONJUNTC	GRUPPO TUBO FLESS MANGUEIRA CONJUNTC	FLEXIBLE (ASSEMBLE) HOSE ASSY.	SCHLAUCH (KPLT.) HOSE ASSY.	P457
29		700-104		1	FITTING 1-3/16 fc sl x 27 Or, Inc. 30, 31 CONEXION	RACCORDO CONEXAO	RACCORD FITTING	ANSCHLUSSSTÜCK FITTING	3300
30		637-64236		1	O-RING 23,6 ID x 2,9 JUNTA HERMETICA	ANELLO TOROIDALE ANEL O	JOINT TORIQUE O-RING	O-RING O-RING	7176
31		238-6018		1	O-RING 3/4 ID x 1/16 JUNTA HERMETICA	ANELLO TOROIDALE ANEL O	JOINT TORIQUE O-RING	O-RING O-RING	7176
32	1	404438A5	a	1	VALVE Priority VALVULA	VALVOLA VALVULA	SOUPAPE VALVE	VENTIL VALVE	9620
32	1	87427822	b	1	VALVE Priority VALVULA	VALVOLA VALVULA	SOUPAPE VALVE	VENTIL VALVE	9620
33		814-10075		3	SCREW M10 x 75; 8 TORNILLO	VITE PARAFUSO	VIS SCHROEF	SCHRAUBE SKRUE	P136
34		402652A1		1	FILTER FILTRO	FILTRO FILTRO	FILTRE FILTER	FILTER FILTER	065F
35		1957801C1		1	SWITCH CONTACTOR	INTERRUTTORE INTERRUPTOR	CONTACTEUR SCHAKELAAR	SCHALTER KONTAKT	075I
36		237-6006		1	O-RING 15/32 ID x 5/64 JUNTA HERMETICA	ANELLO TOROIDALE O-RING	JOINT THORIQUE O-RING	DICHTRING O-RING	055A
37		407616A2		1	VALVE Lube Relief, Inc. 38 - 44 VALVULA	VALVOLA VALVULA	SOUPAPE VALVE	VENTIL VALVE	9620
38		407615A2		1	BODY, VALVE CUERPO DE VALVULA	CORPO, VALVOLA CORPO DA VALVULA	CORPS VALVE BODY, VALVE	VENTILKÖRPER BODY, VALVE	P717
39		107452A1		1	CIRCLIP RETENEDOR	ANELLO DI RITEGNO FREIO DE MOLA	CIRCLIP BORGVEER	HALTERING LAASERING	056A
40		107456A1		1	WASHER ARANDELA	ROSETTA PIANA ANILHA	RONDELLE SLUITRING	BEILAGSCHEIBE FLADSKIVE	131R
41		431858A1		1	SPRING RESORTE	MOLLA MOLA	RESSORT VEER	FEDER FJEDER	100M
42		NSS		1	NOT SERVICED SEPARATELY Plunger NO SE REPARA SEPARA	NON FORNITO SEPARAT NOT SERVICED SEPARA	NON FOURNI SEPAREMI NIET ALLEEN VERKRIJG	KEIN ERSATZTEIL NOT SERVICED SEPARA	064N
43		637-64386		1	O-RING 1-1/2 ID x 7/64 JUNTA HERMETICA	ANELLO TOROIDALE ANEL O	JOINT TORIQUE O-RING	O-RING O-RING	7176
44		238-6018		1	O-RING 3/4 ID x 1/16 JUNTA HERMETICA	ANELLO TOROIDALE ANEL O	JOINT TORIQUE O-RING	O-RING O-RING	7176
47		442847A1		1	HOSE MANGA	MANICOTTO FLESSIBILE TUBO FLEXIVEL	FLEXIBLE FLEXIBELE BUIS	SCHLAUCH SLANGE	030M

(1) See Figure 08-16
(a) BSN AJB0304793
(b) ASN AJB0304793

HYDRAULIC SYSTEM - CHARGE PUMP
IMPIANTO IDRAULICO - POMPA DI CARICA
CIRCUIT HYDRAULIQUE - POMPE DE CHARGE
HYDRAULIKANLAGE - SPEISEPUMPE

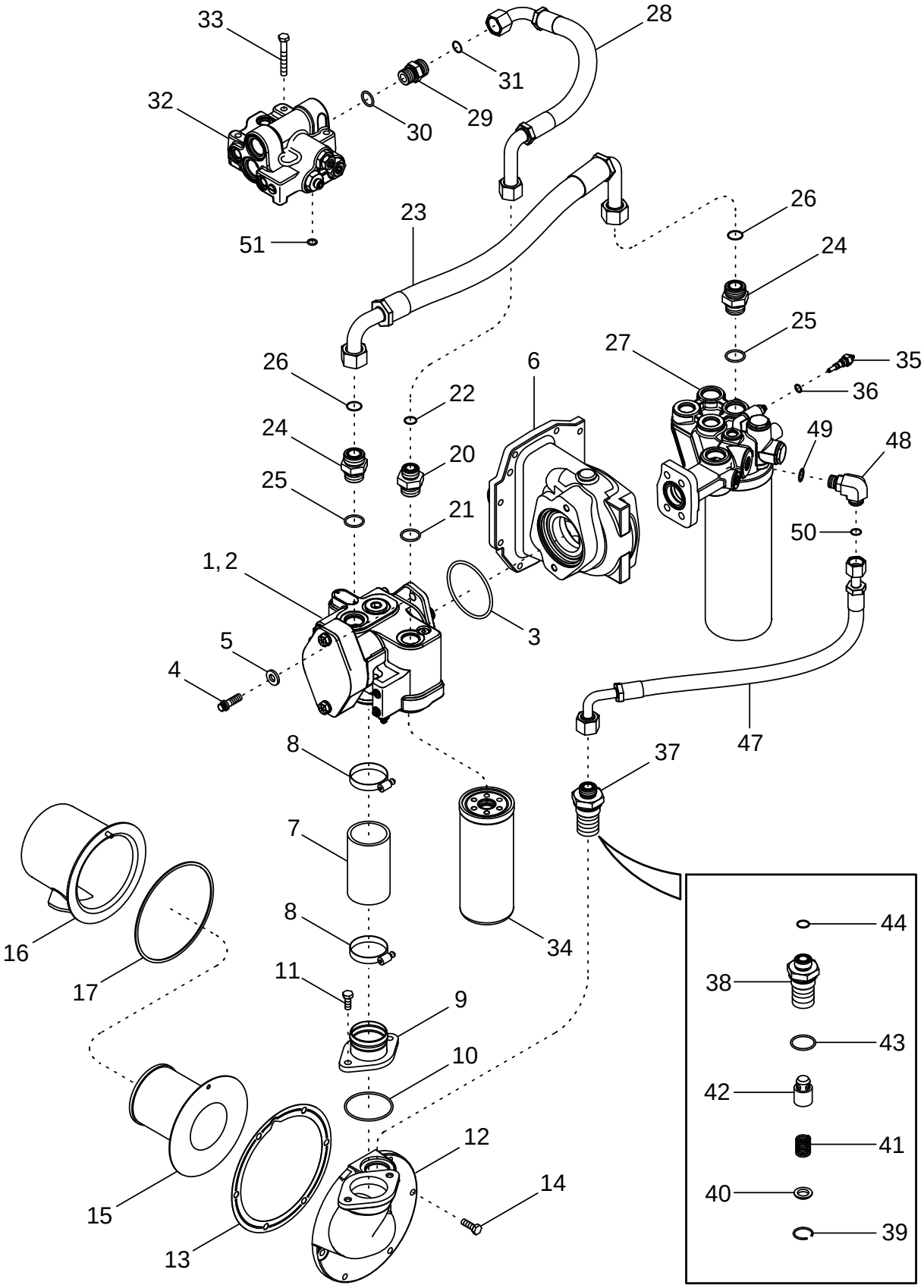

SISTEMA HIDRÁULICO - BOMBA DE CARGA
BOMBA DE CARGA DO SISTEMA HIDRÁULICO
HYDRAULISCH SYSTEEM - LAADPOMP
HYDRAULIKSYSTEM - FØDEPUMPE

R	N	P.N.	MOD	Q	Description Denominacion	Descrizione Denominação	Description Beschrijving	Bezeichnung Beskrivelse	L.C.
48		700-306		1	ELBOW 1 fc sl x 22 Or, Inc 49, 50				
						GOMITO	COUDE	KNIESTÜCK	085G
					CODO	JOELHO	ELLEBOOG	VINKELROER	
49		637-63193		1	O-RING 19,3 ID x 2,2	ANELLO TOROIDALE	JOINT TORIQUE	O-RING	7176
					JUNTA HERMETICA	ANEL O	O-RING	O-RING	
50		238-6016		1	O-RING 5/8 ID x 1/16	ANELLO TOROIDALE	JOINT TORIQUE	O-RING	7176
					JUNTA HERMETICA	ANEL O	O-RING	O-RING	
51		238-6112		1	O-RING 1/2 ID x 3/32	ANELLO TOROIDALE	JOINT TORIQUE	O-RING	7176
					JUNTA HERMETICA	ANEL O	O-RING	O-RING	

08-04		p1	10/04

HYDRAULIC SYSTEM - PISTON PUMP AND FILTER, STANDARD FLOW CAPACITY
IMPIANTO IDRAULICO - POMPA E FILTRO DEI PISTONI, A PORTATA STANDARD
CIRCUIT HYDRAULIQUE - POMPE À PISTON ET FILTRE, DÉBIT STANDARD
HYDRAULIKANLAGE - KOLBENPUMPE UND FILTER, STANDARD-DURCHFLUSSMENGE

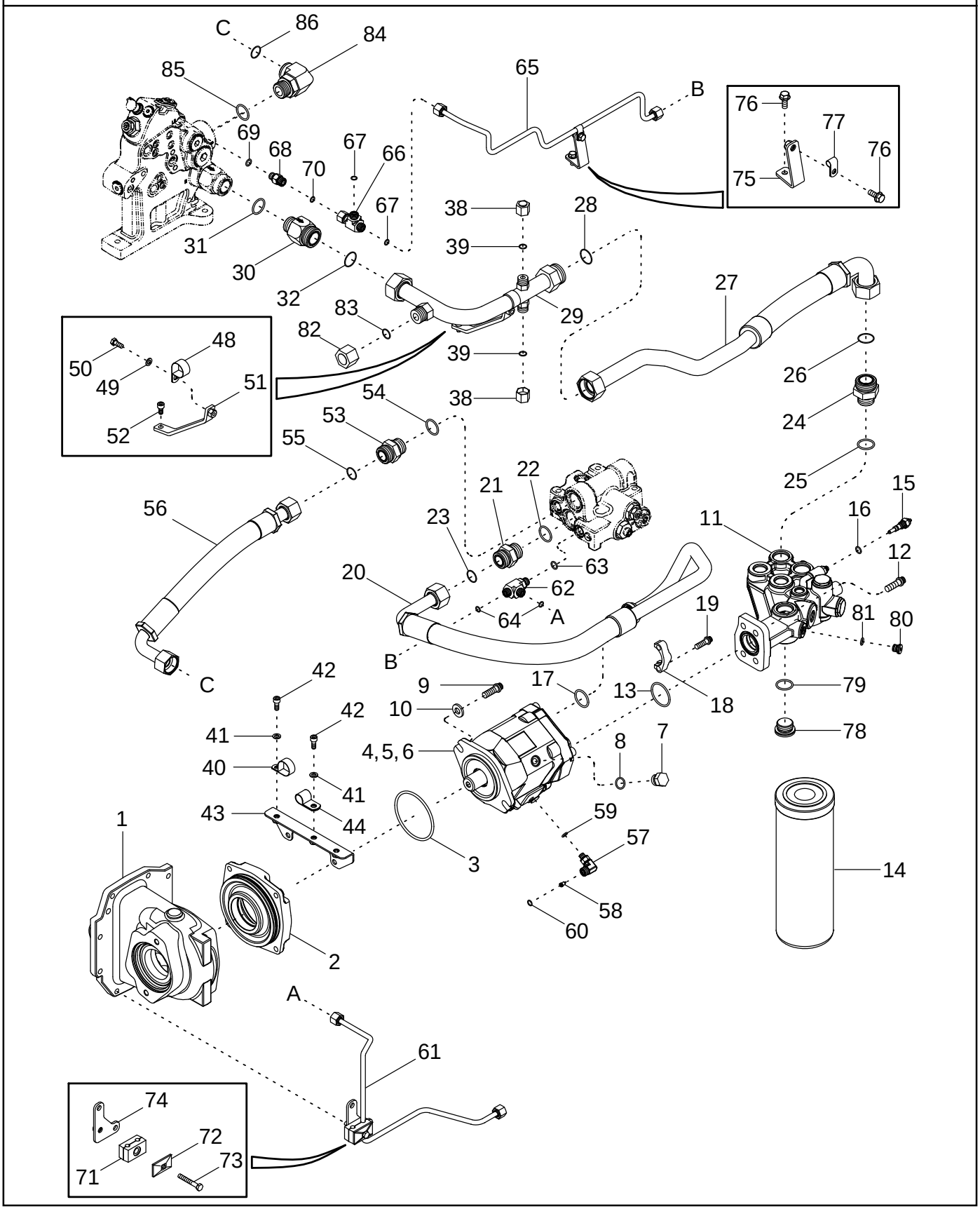

SISTEMA HIDRÁULICO - FILTRO Y BOMBA DE PISTÓN, CAPACIDAD DE FLUJO ESTÁNDAR
SISTEMA HIDRÁULICO - BOMBA DO PISTÃO E FILTRO, CAPACIDADE DE FLUXO STANDARD
HYDRAULISCH SYSTEEM - ZUIGERPOMP EN FILTER, STANDAARD-DEBIETCAPACITEIT
HYDRAULIKSYSTEM - STEMPELPUMPE OG FILTER, STANDARD GENNEMSTRØMNINGSKAPACITET

R	N	P.N.	MOD	Q	Description Denominacion	Descrizione Denominação	Description Beschrijving	Bezeichnung Beskrivelse	L.C.
1	1	389550A1		1	HOUSING CAVIDAD	ALLOGGIAMENTO ALOJAMENTO	CARTER HUIS	GEHÄUSE HUS	014V
2	1	405664A2		1	CAGE JAULA	GABBIA GAIOLA	CAGE CAGE	KÄFIG KUGLEHOLDER	1270
3		238-5345		1	O-RING 4 ID x 3/16 JUNTA HERMETICA	ANELLO TOROIDALE O-RING	JOINT THORIQUE O-RING	DICHTRING O-RING	055A
4		402006A1	a	1	PUMP, HYDRAULIC Standard Flow Capacity, Inc. 5, 6 BOMBA HIDRÁULICA	POMPA IDRAULICA BOMBA HIDRÁULICA	POMPE HYDRAULIQUE POMP	PUMPE, HYDRAULISCH HYDRAULIKPUMPE	155P
4		87429249	b	1	PUMP, HYDRAULIC Standard Flow Capacity, Inc. 5, 6 BOMBA HIDRÁULICA	POMPA IDRAULICA BOMBA HIDRÁULICA	POMPE HYDRAULIQUE POMP	PUMPE, HYDRAULISCH HYDRAULIKPUMPE	155P
5		451781A1	a	1	KIT, SERVICE Compensator KIT, SERVICE	KIT ASSISTENZIALE KIT, SERVICE	KIT ASSISTANCE KIT, SERVICE	WARTUNGSSATZ SERVICE SAET	021K
5		87429483	b	1	KIT, SERVICE Compensator KIT, SERVICE	KIT ASSISTENZIALE KIT, SERVICE	KIT ASSISTANCE KIT, SERVICE	WARTUNGSSATZ SERVICE SAET	021K
6		238-8011		3	O-RING 5/16 ID x 1/16 JUNTA HERMETICA	ANELLO TOROIDALE O-RING	JOINT THORIQUE O-RING	DICHTRING O-RING	055A
7		218-5157		1	PLUG 7/8 Or, Inc. 8 TAPÓN	TAPPO BUJAO	BOUCHON PLUG	STOPFEN PROP	6400
8		237-6010		1	O-RING 3/4 ID x 3/32 JUNTA HERMETICA	ANELLO TOROIDALE ANEL O	JOINT TORIQUE O-RING	O-RING O-RING	7176
9		868-12035		2	SCREW M12 x 35; 8,8 TORNILLO	VITE PARAFUSO	VIS SCHROEF	SCHRAUBE SKRUE	7450
10		896-16012		2	WASHER 13,5 x 28 x 4 mm ARANDELA	ROSETTA PIANA ANILHA	RONDELLE SLUITRING	SCHEIBE FLADSKIVE	9720
11		401600A1		1	HEAD ASSY. Filter CABEZA (CONJUNTO)	TESTA, COMPLESSIVO CABECA CONJUNTO	TETE (ASSEMBLEE) HEAD ASSY.	KOPF (KPLT.) HEAD ASSY.	P605
12		868-12035		4	SCREW M12 x 35; 12.9 TORNILLO	VITE PARAFUSO	VIS SCHROEF	SCHRAUBE SKRUE	7450
13		238-5225		1	O-RING 1-7/8 ID x 1/8 JUNTA HERMETICA	ANELLO TOROIDALE ANEL O	JOINT TORIQUE O-RING	O-RING O-RING	7176
14		277311A1		1	FILTER, HYDRAULIC OIL FILTRO, ACEITE HIDRAU	FILTRO, OLIO IDRAULIC FILTRO, OLEO HIDRAUL	FILTRE, HUILE HYDRAUI FILTER, HYDRAULISCHE	HYDRAULIKÖLFILTER FILTER, HYDRAULIKOLIE	074F
15		1957801C1		1	SWITCH Pressure CONTACTOR	INTERRUTTORE INTERRUPTOR	CONTACTEUR SCHAKELAAR	SCHALTER KONTAKT	075I
16		237-6006		1	O-RING 15/32 ID x 5/64 JUNTA HERMETICA	ANELLO TOROIDALE O-RING	JOINT THORIQUE O-RING	DICHTRING O-RING	055A
17		238-6219		1	O-RING 1-5/16 ID x 1/8 JUNTA HERMETICA	ANELLO TOROIDALE ANEL O	JOINT TORIQUE O-RING	O-RING O-RING	7176
18		86980728		2	CLAMP, COLLAR GRAPA DE SUJECION	STAFFA COLLARE BRACADEIRA DE COLAR	COLLIER-ETRIER SPANHULS	SCHELLENBÜGEL FLANGEBESPÆNDING	227S
19		868-10030		2	BOLT M10 x 30; 12.9 TORNILLO	BULLONE PARAFUSO	BOULON BOUT	SCHAUBENBOLZEN SKRUE	0810

(1) See Figure 06-38
(a) BSN AJB0304793
(b) ASN AJB0304793

HYDRAULIC SYSTEM - PISTON PUMP AND FILTER, STANDARD FLOW CAPACITY
IMPIANTO IDRAULICO - POMPA E FILTRO DEI PISTONI, A PORTATA STANDARD
CIRCUIT HYDRAULIQUE - POMPE À PISTON ET FILTRE, DÉBIT STANDARD
HYDRAULIKANLAGE - KOLBENPUMPE UND FILTER, STANDARD-DURCHFLUSSMENGE

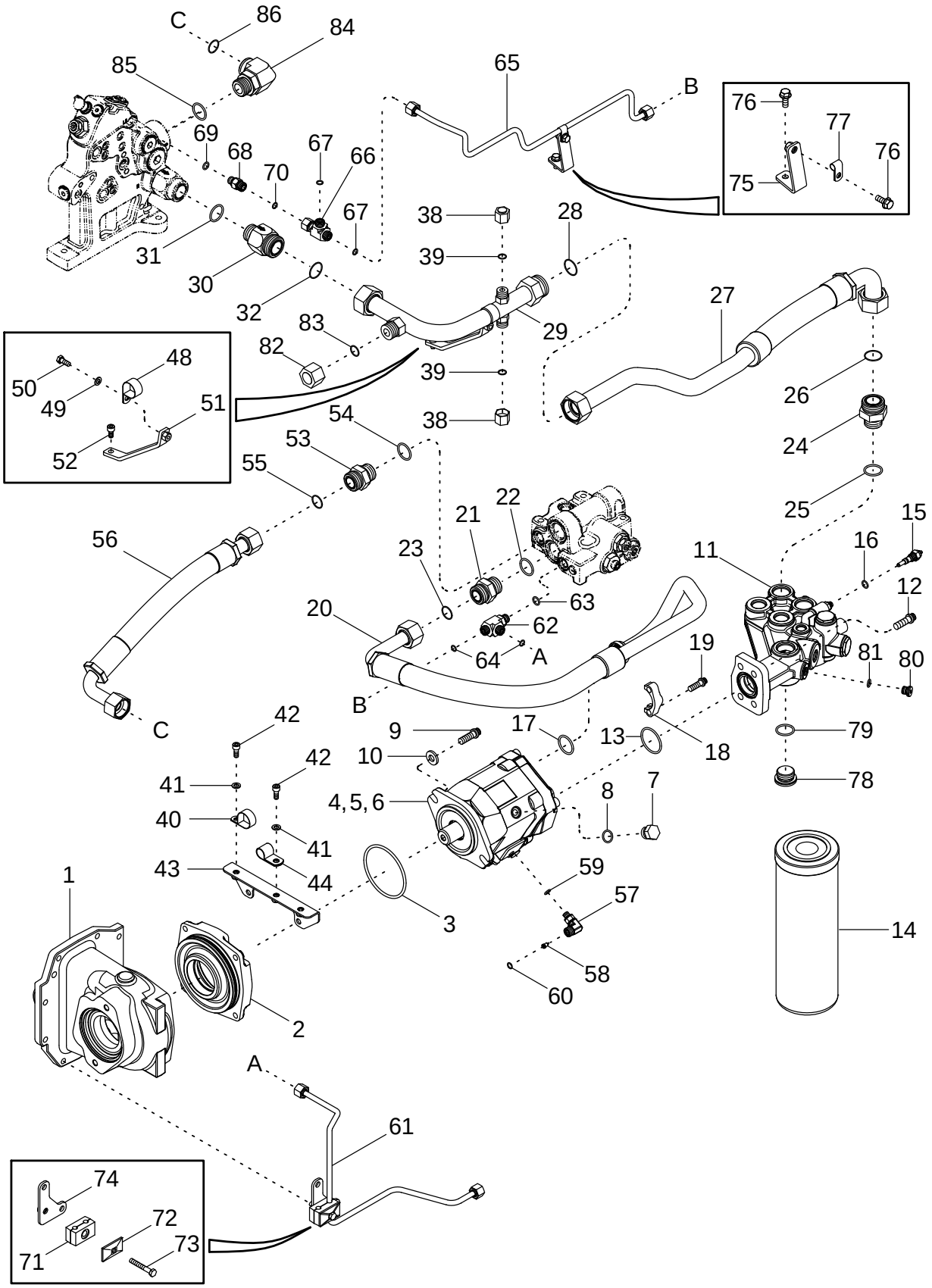

SISTEMA HIDRÁULICO - FILTRO Y BOMBA DE PISTÓN, CAPACIDAD DE FLUJO ESTÁNDAR
SISTEMA HIDRÁULICO - BOMBA DO PISTÃO E FILTRO, CAPACIDADE DE FLUXO STANDARD
HYDRAULISCH SYSTEEM - ZUIGERPOMP EN FILTER, STANDAARD-DEBIETCAPACITEIT
HYDRAULIKSYSTEM - STEMPELPUMPE OG FILTER, STANDARD GENNEMSTRØMNINGSKAPACITET

R	N	P.N.	MOD	Q	Description Denominacion	Descrizione Denominação	Description Beschrijving	Bezeichnung Beskrivelse	L.C.
20		451055A2	a	1	HOSE MANGA	MANICOTTO FLESSIBILE TUBO FLEXIVEL	FLEXIBLE FLEXIBELE BUIS	SCHLAUCH SLANGE	030M
20		87438800	b	1	HOSE MANGA	MANICOTTO FLESSIBILE TUBO FLEXIVEL	FLEXIBLE FLEXIBELE BUIS	SCHLAUCH SLANGE	030M
21		700-105		1	CONNECTOR, HYD. 1-7/16 fc sl x 33 Or, Inc. 22, 23 RACOR	RACCORDO IDRAULICO CONECTOR	RACCORD VERBINDING	STUTZEN FORSKRUNING	020R
22		637-64296		1	O-RING 29,6 ID x 2,9 JUNTA HERMETICA	ANELLO TOROIDALE ANEL O	JOINT TORIQUE O-RING	O-RING O-RING	7176
23		238-6021		1	O-RING 15/16 ID x 1/16 JUNTA HERMETICA	ANELLO TOROIDALE ANEL O	JOINT TORIQUE O-RING	O-RING O-RING	7176
24		700-134		1	UNION 1-11/16 fc sl x 33 Or, Inc. 25, 26 CONEXION	RACCORDO A GOMITO UNIAO	UNION KOPPELING	VERBAND FORSKRUNING	9560
25		637-64296		1	O-RING 29,6 ID x 2,9 JUNTA HERMETICA	ANELLO TOROIDALE ANEL O	JOINT TORIQUE O-RING	O-RING O-RING	7176
26		238-6025		1	O-RING 1-3/16 ID x 1/16 JUNTA HERMETICA	ANELLO TOROIDALE ANEL O	JOINT TORIQUE O-RING	O-RING O-RING	7176
27		450508A1		1	HOSE MANGA	MANICOTTO FLESSIBILE TUBO FLEXIVEL	FLEXIBLE FLEXIBELE BUIS	SCHLAUCH SLANGE	030M
28		238-6025		1	O-RING 1-3/16 ID x 1/16 JUNTA HERMETICA	ANELLO TOROIDALE ANEL O	JOINT TORIQUE O-RING	O-RING O-RING	7176
29		450507A1		1	TUBE ASSY. TUBO (CONJUNTO)	TUBO, COMPLESSIVO TUBO CONJUNTO	TUYAUTERIE TUBE ASSY.	ROHRLEITUNG TUBE ASSY.	P465
30		254851A1		1	VALVE, CHECK 1-11/16 fc sl x 33 Or, Inc. 31, 32 VALVULA ANTIRRETORN	VALVOLA, DI RITEGNO VALVULA CHECAGEM	SOUPAPE ANTI RETOUR VALVE, CHECK	RUECKSCHLAGVENTIL VALVE, CHECK	P140
31		637-64296		1	O-RING 29,6 ID x 2,9 JUNTA HERMETICA	ANELLO TOROIDALE ANEL O	JOINT TORIQUE O-RING	O-RING O-RING	7176
32		238-6025		1	O-RING 1-3/16 ID x 1/16 JUNTA HERMETICA	ANELLO TOROIDALE ANEL O	JOINT TORIQUE O-RING	O-RING O-RING	7176
38		701-905		2	PLUG 13/16 NF TAPÓN	TAPPO BUJAO	BOUCHON PLUG	STOPFEN PROP	6400
39		238-6014		2	O-RING 1/2 ID x 1/16 JUNTA HERMETICA	ANELLO TOROIDALE ANEL O	JOINT TORIQUE O-RING	O-RING O-RING	7176
40		515-22317		1	CLAMP 1-1/4 ID COLLAR	MORSETTO BRACADEIRA	COLLIER CLAMP	SCHELLE CLAMP	1640
41		895-11008		2	WASHER 9 x 16 x 1,6 mm ARANDELA	ROSETTA PIANA ANILHA	RONDELLE SLUITRING	BEILAGSCHEIBE FLADSKIVE	131R
42		864-8020		2	SCREW M8 x 20; 8.8 TORNILLO	VITE PARAFUSO	VIS SCHROEF	SCHRAUBE SKRUE	040V
43		451054A1		1	BRACKET PIEZA DE SOPORTE	STAFFA BRACADEIRA	PATTE FIXATION STEUNBEUGEL	HALTERUNG BESLAG	225S
44		515-22349		1	CLAMP 1-3/8 ID COLLAR	MORSETTO BRACADEIRA	COLLIER CLAMP	SCHELLE CLAMP	1640
48		515-23317		1	CLAMP 1-1/4 ID COLLAR	MORSETTO BRACADEIRA	COLLIER CLAMP	SCHELLE CLAMP	1640

(a) BSN AJB0304052
(b) ASN AJB0304052

HYDRAULIC SYSTEM - PISTON PUMP AND FILTER, STANDARD FLOW CAPACITY
IMPIANTO IDRAULICO - POMPA E FILTRO DEI PISTONI, A PORTATA STANDARD
CIRCUIT HYDRAULIQUE - POMPE À PISTON ET FILTRE, DÉBIT STANDARD
HYDRAULIKANLAGE - KOLBENPUMPE UND FILTER, STANDARD-DURCHFLUSSMENGE

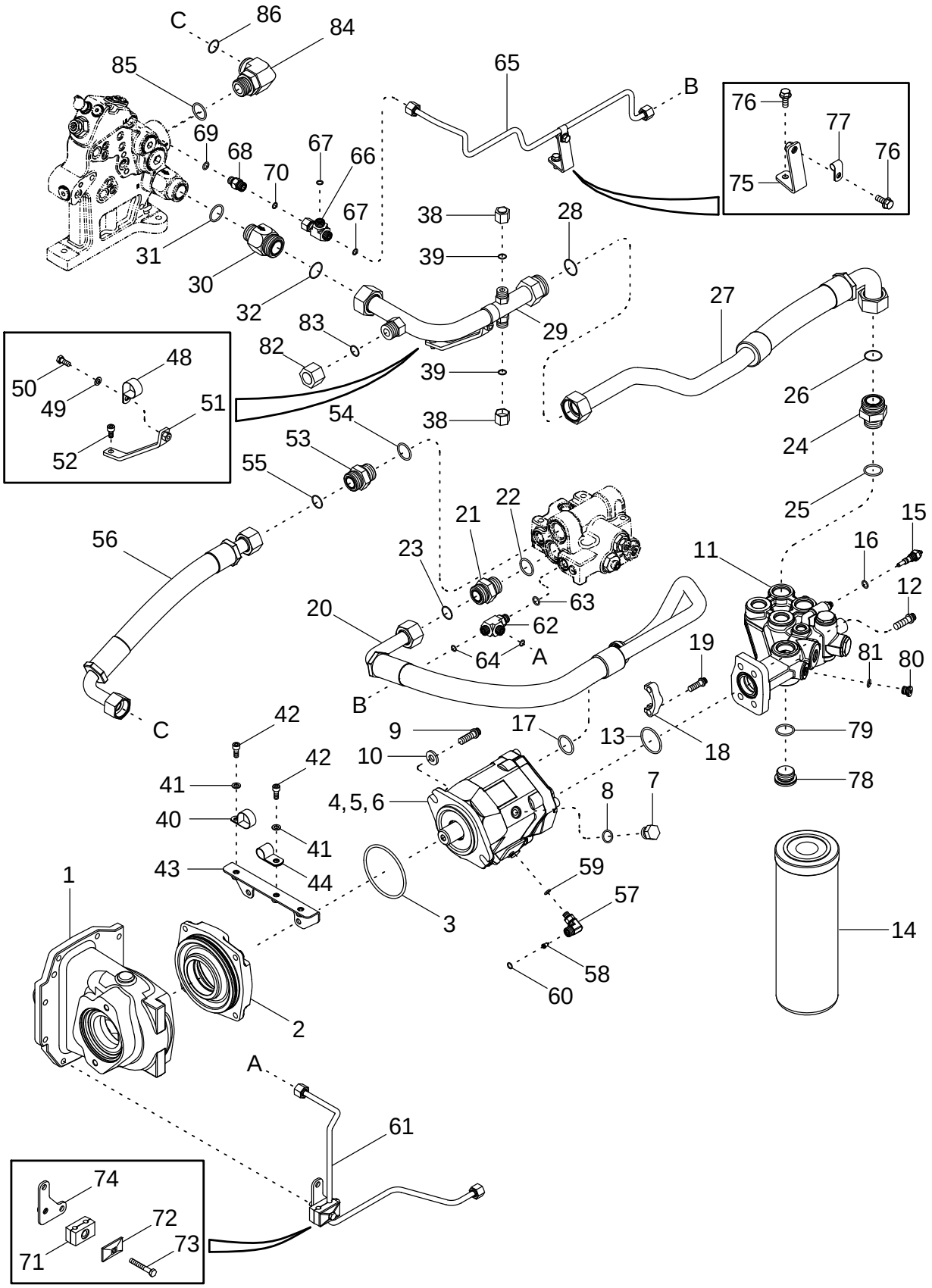

SISTEMA HIDRÁULICO - FILTRO Y BOMBA DE PISTÓN, CAPACIDAD DE FLUJO ESTÁNDAR
SISTEMA HIDRÁULICO - BOMBA DO PISTÃO E FILTRO, CAPACIDADE DE FLUXO STANDARD
HYDRAULISCH SYSTEEM - ZUIGERPOMP EN FILTER, STANDAARD-DEBIETCAPACITEIT
HYDRAULIKSYSTEM - STEMPELPUMPE OG FILTER, STANDARD GENNEMSTRØMNINGSKAPACITET

R	N	P.N.	MOD	Q	Description Denominacion	Descrizione Denominação	Description Beschrijving	Bezeichnung Beskrivelse	L.C.
49		895-11008		1	WASHER 9 x 16 x 1,6 mm ARANDELA	ROSETTA PIANA ANILHA	RONDELLE SLUITRING	BEILAGSCHEIBE FLADSKIVE	131R
50		614-8020		1	SCREW M8 x 20; 8.8 TORNILLO	VITE PARAFUSO	VIS SCHROEF	SCHRAUBE SKRUE	P136
51		450515A1		1	BRACKET PIEZA DE SOPORTE	STAFFA BRACADEIRA	PATTE FIXATION STEUNBEUGEL	HALTERUNG BESLAG	225S
52		864-8016		1	SCREW M8 x 16; 8.8 TORNILLO	VITE PARAFUSO	VIS SCHROEF	SCHRAUBE SKRUE	7450
53		700-105		1	CONNECTOR, HYD. 1-7/16 fc sl x 33 Or, Inc. 54, 55 RACOR	RACCORDO IDRAULICO CONECTOR	RACCORD VERBINDING	STUTZEN FORSKRUNING	020R
54		637-64296		1	O-RING 29,6 ID x 2,9 JUNTA HERMETICA	ANELLO TOROIDALE ANEL O	JOINT TORIQUE O-RING	O-RING O-RING	7176
55		238-6021		1	O-RING 15/16 ID x 1/16 JUNTA HERMETICA	ANELLO TOROIDALE ANEL O	JOINT TORIQUE O-RING	O-RING O-RING	7176
56	1	440561A1	a	1	TUBE ASSY. TUBO (CONJUNTO)	TUBO, COMPLESSIVO TUBO CONJUNTO	TUYAUTERIE TUBE ASSY.	ROHRLEITUNG TUBE ASSY.	P465
56		87413846	b	1	TUBE ASSY. TUBO (CONJUNTO)	TUBO, COMPLESSIVO TUBO CONJUNTO	TUYAUTERIE TUBE ASSY.	ROHRLEITUNG TUBE ASSY.	P465
57		451226A1		1	ELBOW Inc. 58, 59, 60 CODO	GOMITO JOELHO	COUDE ELLEBOOG	KNIESTÜCK VINKELROER	085G
58		133519C1		1	SCREEN PANTALLA PROTECTOR	SCHERMO ECRAN	ECRAN SCHERM	BILDSCHIRM SKAERM	047S
59		637-63093		1	O-RING 9,3 ID x 2,2 JUNTA HERMETICA	ANELLO TOROIDALE ANEL O	JOINT TORIQUE O-RING	O-RING O-RING	7176
60		238-6012		1	O-RING 3/8 ID x 1/16 JUNTA HERMETICA	ANELLO TOROIDALE ANEL O	JOINT TORIQUE O-RING	O-RING O-RING	7176
61		451209A1		1	TUBE ASSY. TUBO (CONJUNTO)	TUBO, COMPLESSIVO TUBO CONJUNTO	TUYAUTERIE TUBE ASSY.	ROHRLEITUNG TUBE ASSY.	P465
62		700-441		1	TEE 13/16 fc sl x 16 Or, Inc. 63, 64 RACOR-T	PEZZO A T TE	TE TEE	T-STÜCK T-STYKKE	9020
63		637-63113		1	O-RING 11,3 ID x 2,2 JUNTA HERMETICA	ANELLO TOROIDALE O-RING	JOINT THORIQUE O-RING	DICHTRING O-RING	055A
64		238-6014		2	O-RING 1/2 ID x 1/16 JUNTA HERMETICA	ANELLO TOROIDALE ANEL O	JOINT TORIQUE O-RING	O-RING O-RING	7176
65		433592A1		1	TUBE ASSY. TUBO (CONJUNTO)	TUBO, COMPLESSIVO TUBO CONJUNTO	TUYAUTERIE TUBE ASSY.	ROHRLEITUNG TUBE ASSY.	P465
66		701-422		1	TEE 11/16 fc sl x 11/16 sw, Inc. 67 RACOR-T	PEZZO A T TE	TE TEE	T-STÜCK T-STYKKE	9020
67		238-6012		2	O-RING 3/8 ID x 1/16 JUNTA HERMETICA	ANELLO TOROIDALE ANEL O	JOINT TORIQUE O-RING	O-RING O-RING	7176
68		223971A1		1	VALVE, CHECK Inc. 69, 70 VALVULA DE CIERRE	VALVOLA, DI RITEGNO VALVULA CHECAGEM	CLAPET ANTI-RETOUR INZETSTUK	RÜCKSCHLAGVENTIL KONTRAVENTIL	P394

(1) Order 87413846. Also Order 413993A1 REF 85 for Initial Replacement
(a) BSN AJB0300037
(b) ASN AJB0300037

HYDRAULIC SYSTEM - PISTON PUMP AND FILTER, STANDARD FLOW CAPACITY
IMPIANTO IDRAULICO - POMPA E FILTRO DEI PISTONI, A PORTATA STANDARD
CIRCUIT HYDRAULIQUE - POMPE À PISTON ET FILTRE, DÉBIT STANDARD
HYDRAULIKANLAGE - KOLBENPUMPE UND FILTER, STANDARD-DURCHFLUSSMENGE

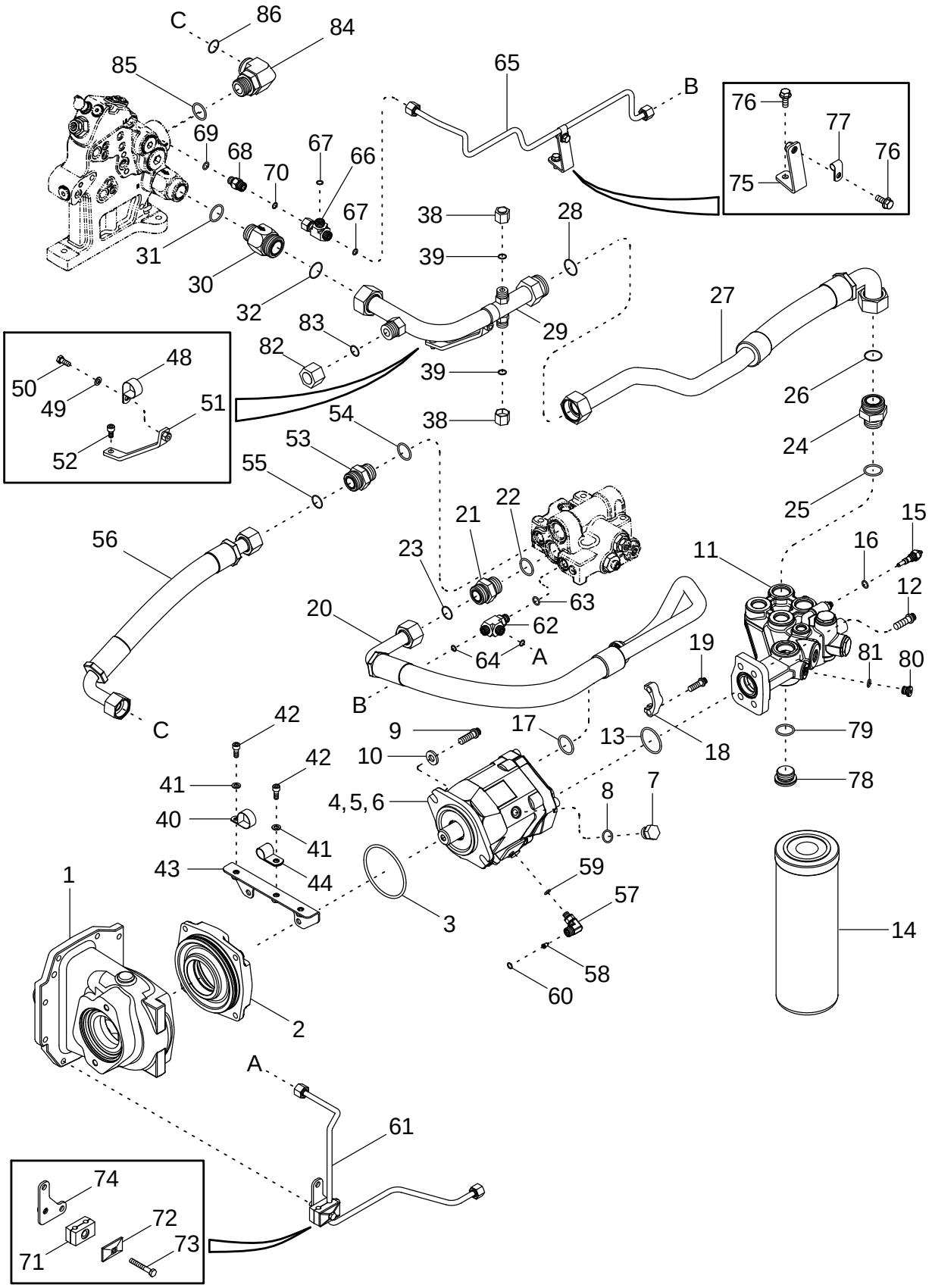

SISTEMA HIDRÁULICO - FILTRO Y BOMBA DE PISTÓN, CAPACIDAD DE FLUJO ESTÁNDAR
SISTEMA HIDRÁULICO - BOMBA DO PISTÃO E FILTRO, CAPACIDADE DE FLUXO STANDARD
HYDRAULISCH SYSTEEM - ZUIGERPOMP EN FILTER, STANDAARD-DEBIETCAPACITEIT
HYDRAULIKSYSTEM - STEMPELPUMPE OG FILTER, STANDARD GENNEMSTRØMNINGSKAPACITET

R	N	P.N.	MOD	Q	Description Denominacion	Descrizione Denominação	Description Beschrijving	Bezeichnung Beskrivelse	L.C.
69		637-63113		1	O-RING 11,3 ID x 2,2 JUNTA HERMETICA	ANELLO TOROIDALE O-RING	JOINT THORIQUE O-RING	DICHTRING O-RING	055A
70		238-6012		1	O-RING 3/8 ID x 1/16 JUNTA HERMETICA	ANELLO TOROIDALE ANEL O	JOINT TORIQUE O-RING	O-RING O-RING	7176
71		1546024C1		1	CLAMP COLLAR	MORSETTO BRACADEIRA	COLLIER CLAMP	SCHELLE CLAMP	1640
72		384870A1		1	PLATE PLACA	PIASTRA CHAPA	PLAQUE PLAAT	PLATTE PLADE	105P
73		814-8055		1	SCREW M8 x 55; 8.8 TORNILLO	VITE PARAFUSO	VIS SCHROEF	SCHRAUBE SKRUE	7450
74		451211A1		1	PLATE PLACA	PIASTRA CHAPA	PLAQUE PLAAT	PLATTE PLADE	105P
75		86988626		1	BRACKET PIEZA DE SOPORTE	STAFFA BRACADEIRA	PATTE FIXATION STEUNBEUGEL	HALTERUNG BESLAG	225S
76		844-8020		2	BOLT M8 x 20; 8.8 TORNILLO	BULLONE PARAFUSO	BOULON BOUT	SCHAUBENBOLZEN SKRUE	140B
77		515-2295		1	CLAMP 3/8 ID COLLAR	MORSETTO BRACADEIRA	COLLIER CLAMP	SCHELLE CLAMP	1640
78		221527A1		1	PLUG M33 Or, Inc. 79 TAPÓN	TAPPO BUJÃO	BOUCHON PLUG	STOPFEN PROP	050T
79		637-64296		1	O-RING 29,6 ID x 2,9 JUNTA HERMETICA	ANELLO TOROIDALE ANEL O	JOINT TORIQUE O-RING	O-RING O-RING	7176
80		221576A1		1	PLUG M14 Or, Inc. 81 TAPÓN	TAPPO BUJÃO	BOUCHON PLUG	STOPFEN PROP	050T
81		637-63113		1	O-RING 11,3 ID x 2,2 JUNTA HERMETICA	ANELLO TOROIDALE O-RING	JOINT THORIQUE O-RING	DICHTRING O-RING	055A
82		701-907		1	PLUG Inc. 83 TAPÓN	TAPPO BUJAO	BOUCHON PLUG	STOPFEN PROP	6400
83		238-6018		1	O-RING 3/4 ID x 1/16 JUNTA HERMETICA	ANELLO TOROIDALE ANEL O	JOINT TORIQUE O-RING	O-RING O-RING	7176
84		700-105	a	1	CONNECTOR, HYD. 1-7/16 fc sl x 33 Or, Inc. 85, 86 RACOR	RACCORDO IDRAULICO CONECTOR	RACCORD VERBINDING	STUTZEN FORSKRUNING	020R
84		413993A1	b	1	ELBOW Inc. 85, 86 CODO	GOMITO JOELHO	COUDE ELLEBOOG	KNIESTÜCK VINKELROER	085G
85		637-64296		1	O-RING 29,6 ID x 2,9 JUNTA HERMETICA	ANELLO TOROIDALE ANEL O	JOINT TORIQUE O-RING	O-RING O-RING	7176
86		238-6021		1	O-RING 15/16 ID x 1/16 JUNTA HERMETICA	ANELLO TOROIDALE ANEL O	JOINT TORIQUE O-RING	O-RING O-RING	7176

(a) BSN AJB0304052
(b) ASN AJB0304052

08-05		p1	10/04

HYDRAULIC SYSTEM - PISTON PUMP AND FILTER, HIGH FLOW CAPACITY
IMPIANTO IDRAULICO - POMPA E FILTRO DEI PISTONI, AD ALTA PORTATA
CIRCUIT HYDRAULIQUE - POMPE À PISTON ET FILTRE, DÉBIT ÉLEVÉ
HYDRAULIKANLAGE - KOLBENPUMPE UND FILTER, HOCHLEISTUNGS-DURCHFLUSSMENGE

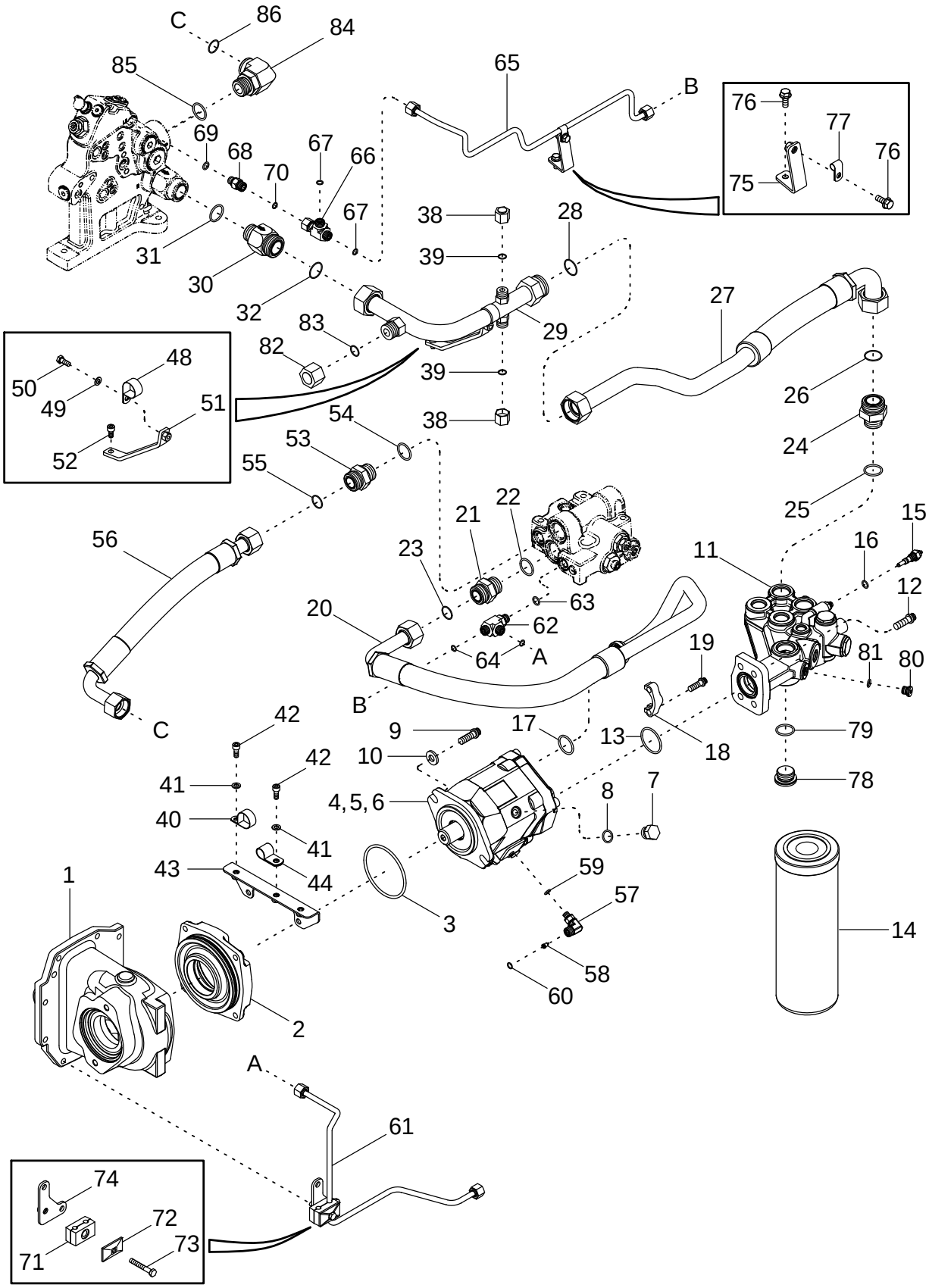

SISTEMA HIDRÁULICO - FILTRO Y BOMBA DE PISTÓN, CAPACIDAD DE FLUJO ALTA
SISTEMA HIDRÁULICO - BOMBA DO PISTÃO E FILTRO, CAPACIDADE DE FLUXO ELEVADO
HYDRAULISCH SYSTEEM - ZUIGERPOMP EN FILTER, HOGE DEBIETCAPACITEIT
HYDRAULIKSYSTEM - STEMPELPUMPE OG FILTER, HØJ GENNEMSTRØMNINGSKAPACITET

R	N	P.N.	MOD	Q	Description Denominacion	Descrizione Denominação	Description Beschrijving	Bezeichnung Beskrivelse	L.C.
1	1	389550A1		1	HOUSING CAVIDAD	ALLOGGIAMENTO ALOJAMENTO	CARTER HUIS	GEHÄUSE HUS	014V
2	1	405664A2		1	CAGE JAULA	GABBIA GAIOLA	CAGE CAGE	KÄFIG KUGLEHOLDER	1270
3		238-5345		1	O-RING 4 ID x 3/16 JUNTA HERMETICA	ANELLO TOROIDALE O-RING	JOINT THORIQUE O-RING	DICHTRING O-RING	055A
4		402007A2	a	1	PUMP, HYDRAULIC High Flow Capacity, Inc. 5, 6 BOMBA HIDRÁULICA	POMPA IDRAULICA BOMBA HIDRÁULICA	POMPE HYDRAULIQUE POMP	PUMPE, HYDRAULISCH HYDRAULIKPUMPE	155P
4		87429252	b	1	PUMP, HYDRAULIC High Flow Capacity, Inc. 5, 6 BOMBA HIDRÁULICA	POMPA IDRAULICA BOMBA HIDRÁULICA	POMPE HYDRAULIQUE POMP	PUMPE, HYDRAULISCH HYDRAULIKPUMPE	155P
5		451781A1	a	1	KIT, SERVICE Compensator KIT, SERVICE	KIT ASSISTENZIALE KIT, SERVICE	KIT ASSISTANCE KIT, SERVICE	WARTUNGSSATZ SERVICE SAET	021K
5		87429483	b	1	KIT, SERVICE Compensator KIT, SERVICE	KIT ASSISTENZIALE KIT, SERVICE	KIT ASSISTANCE KIT, SERVICE	WARTUNGSSATZ SERVICE SAET	021K
6		238-8011		3	O-RING 5/16 ID x 1/16 JUNTA HERMETICA	ANELLO TOROIDALE O-RING	JOINT THORIQUE O-RING	DICHTRING O-RING	055A
7		218-5157		1	PLUG 7/8 Or, Inc. 8 TAPÓN	TAPPO BUJAO	BOUCHON PLUG	STOPFEN PROP	6400
8		237-6010		1	O-RING 3/4 ID x 3/32 JUNTA HERMETICA	ANELLO TOROIDALE ANEL O	JOINT TORIQUE O-RING	O-RING O-RING	7176
9		868-12035		2	SCREW M12 x 35; 8,8 TORNILLO	VITE PARAFUSO	VIS SCHROEF	SCHRAUBE SKRUE	7450
10		896-16012		2	WASHER 13,5 x 28 x 4 mm ARANDELA	ROSETTA PIANA ANILHA	RONDELLE SLUITRING	SCHEIBE FLADSKIVE	9720
11		405409A1		1	HEAD ASSY. Filter CABEZA (CONJUNTO)	TESTA, COMPLESSIVO CABECA CONJUNTO	TETE (ASSEMBLEE) HEAD ASSY.	KOPF (KPLT.) HEAD ASSY.	P605
12		868-12035		4	SCREW M12 x 35; 12.9 TORNILLO	VITE PARAFUSO	VIS SCHROEF	SCHRAUBE SKRUE	7450
13		238-5228		1	O-RING 2-1/4 ID x 1/8 JUNTA HERMETICA	ANELLO TOROIDALE ANEL O	JOINT TORIQUE O-RING	O-RING O-RING	7176
14		277311A1		1	FILTER, HYDRAULIC OIL FILTRO, ACEITE HIDRAU	FILTRO, OLIO IDRAULIC FILTRO, OLEO HIDRAUL	FILTRE, HUILE HYDRAUI FILTER, HYDRAULISCHE	HYDRAULIKÖLFILTER FILTER, HYDRAULIKOLIE	074F
15		1957801C1		1	SWITCH Pressure CONTACTOR	INTERRUTTORE INTERRUPTOR	CONTACTEUR SCHAKELAAR	SCHALTER KONTAKT	075I
16		237-6006		1	O-RING 15/32 ID x 5/64 JUNTA HERMETICA	ANELLO TOROIDALE O-RING	JOINT THORIQUE O-RING	DICHTRING O-RING	055A
17		238-6219		1	O-RING 1-5/16 ID x 1/8 JUNTA HERMETICA	ANELLO TOROIDALE ANEL O	JOINT TORIQUE O-RING	O-RING O-RING	7176
18		86980728		2	CLAMP, COLLAR GRAPA DE SUJECION	STAFFA COLLARE BRACADEIRA DE COLAR	COLLIER-ETRIER SPANHULS	SCHELLENBÜGEL FLANGEBESPÆNDING	227S
19		868-10030		2	BOLT M10 x 30; 12.9 TORNILLO	BULLONE PARAFUSO	BOULON BOUT	SCHAUBENBOLZEN SKRUE	0810

(1) See Figure 06-38
(a) BSN AJB0304793
(b) ASN AJB0304793

HYDRAULIC SYSTEM - PISTON PUMP AND FILTER, HIGH FLOW CAPACITY
IMPIANTO IDRAULICO - POMPA E FILTRO DEI PISTONI, AD ALTA PORTATA
CIRCUIT HYDRAULIQUE - POMPE À PISTON ET FILTRE, DÉBIT ÉLEVÉ
HYDRAULIKANLAGE - KOLBENPUMPE UND FILTER, HOCHLEISTUNGS-DURCHFLUSSMENGE

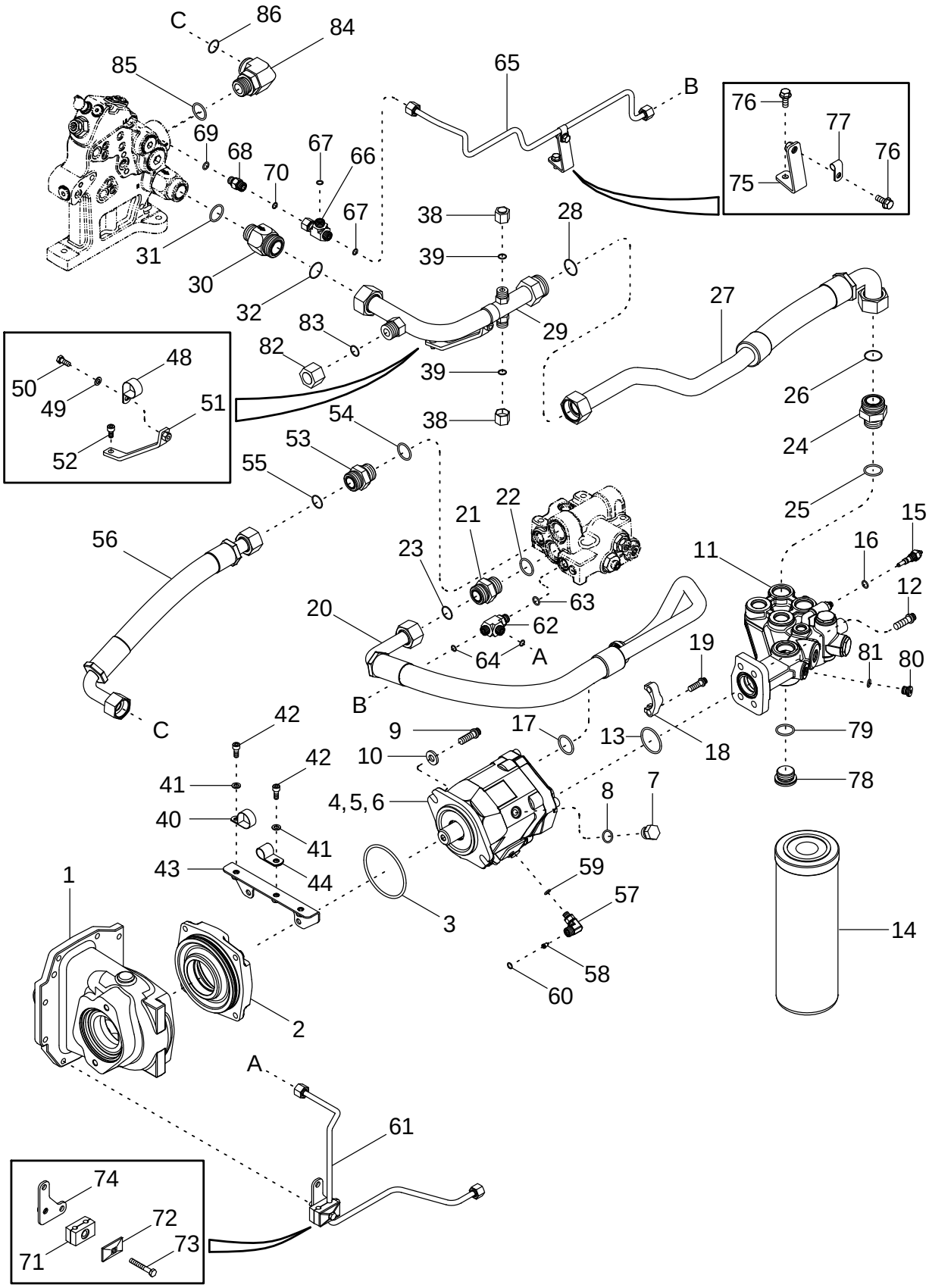

SISTEMA HIDRÁULICO - FILTRO Y BOMBA DE PISTÓN, CAPACIDAD DE FLUJO ALTA
SISTEMA HIDRÁULICO - BOMBA DO PISTÃO E FILTRO, CAPACIDADE DE FLUXO ELEVADO
HYDRAULISCH SYSTEEM - ZUIGERPOMP EN FILTER, HOGE DEBIETCAPACITEIT
HYDRAULIKSYSTEM - STEMPELPUMPE OG FILTER, HØJ GENNEMSTRØMNINGSKAPACITET

R	N	P.N.	MOD	Q	Description Denominacion	Descrizione Denominação	Description Beschrijving	Bezeichnung Beskrivelse	L.C.
20		451055A2	a	1	HOSE MANGA	MANICOTTO FLESSIBILE TUBO FLEXIVEL	FLEXIBLE FLEXIBELE BUIS	SCHLAUCH SLANGE	030M
20		87438801	b	1	HOSE MANGA	MANICOTTO FLESSIBILE TUBO FLEXIVEL	FLEXIBLE FLEXIBELE BUIS	SCHLAUCH SLANGE	030M
21		700-105		1	CONNECTOR, HYD. 1-7/16 fc sl x 33 Or, Inc. 22, 23 RACOR	RACCORDO IDRAULICO CONECTOR	RACCORD VERBINDING	STUTZEN FORSKRUNING	020R
22		637-64296		1	O-RING 29,6 ID x 2,9 JUNTA HERMETICA	ANELLO TOROIDALE ANEL O	JOINT TORIQUE O-RING	O-RING O-RING	7176
23		238-6021		1	O-RING 15/16 ID x 1/16 JUNTA HERMETICA	ANELLO TOROIDALE ANEL O	JOINT TORIQUE O-RING	O-RING O-RING	7176
24		700-134		1	UNION 1-11/16 fc sl x 33 Or, Inc. 25, 26 CONEXION	RACCORDO A GOMITO UNIAO	UNION KOPPELING	VERBAND FORSKRUNING	9560
25		637-64296		1	O-RING 29,6 ID x 2,9 JUNTA HERMETICA	ANELLO TOROIDALE ANEL O	JOINT TORIQUE O-RING	O-RING O-RING	7176
26		238-6025		1	O-RING 1-3/16 ID x 1/16 JUNTA HERMETICA	ANELLO TOROIDALE ANEL O	JOINT TORIQUE O-RING	O-RING O-RING	7176
27		450508A1		1	HOSE MANGA	MANICOTTO FLESSIBILE TUBO FLEXIVEL	FLEXIBLE FLEXIBELE BUIS	SCHLAUCH SLANGE	030M
28		238-6025		1	O-RING 1-3/16 ID x 1/16 JUNTA HERMETICA	ANELLO TOROIDALE ANEL O	JOINT TORIQUE O-RING	O-RING O-RING	7176
29		450507A1		1	TUBE ASSY. TUBO (CONJUNTO)	TUBO, COMPLESSIVO TUBO CONJUNTO	TUYAUTERIE TUBE ASSY.	ROHRLEITUNG TUBE ASSY.	P465
30		254851A1		1	VALVE, CHECK 1-11/16 fc sl x 33 Or, Inc. 31, 32 VALVULA ANTIRRETORN	VALVOLA, DI RITEGNO VALVULA CHECAGEM	SOUPAPE ANTI RETOUR VALVE, CHECK	RUECKSCHLAGVENTIL VALVE, CHECK	P140
31		637-64296		1	O-RING 29,6 ID x 2,9 JUNTA HERMETICA	ANELLO TOROIDALE ANEL O	JOINT TORIQUE O-RING	O-RING O-RING	7176
32		238-6025		1	O-RING 1-3/16 ID x 1/16 JUNTA HERMETICA	ANELLO TOROIDALE ANEL O	JOINT TORIQUE O-RING	O-RING O-RING	7176
38		701-905		2	PLUG 13/16 NF TAPÓN	TAPPO BUJAO	BOUCHON PLUG	STOPFEN PROP	6400
39		238-6014		2	O-RING 1/2 ID x 1/16 JUNTA HERMETICA	ANELLO TOROIDALE ANEL O	JOINT TORIQUE O-RING	O-RING O-RING	7176
40		515-22317		1	CLAMP 1-1/4 ID COLLAR	MORSETTO BRACADEIRA	COLLIER CLAMP	SCHELLE CLAMP	1640
41		895-11008		2	WASHER 9 x 16 x 1,6 mm ARANDELA	ROSETTA PIANA ANILHA	RONDELLE SLUITRING	BEILAGSCHEIBE FLADSKIVE	131R
42		864-8020		2	SCREW M8 x 20; 8.8 TORNILLO	VITE PARAFUSO	VIS SCHROEF	SCHRAUBE SKRUE	040V
43		451054A1		1	BRACKET PIEZA DE SOPORTE	STAFFA BRACADEIRA	PATTE FIXATION STEUNBEUGEL	HALTERUNG BESLAG	225S
44		515-22349		1	CLAMP 1-3/8 ID COLLAR	MORSETTO BRACADEIRA	COLLIER CLAMP	SCHELLE CLAMP	1640
48		515-23317		1	CLAMP 1-1/4 ID COLLAR	MORSETTO BRACADEIRA	COLLIER CLAMP	SCHELLE CLAMP	1640

(a) BSN AJB0304052
(b) ASN AJB0304052

HYDRAULIC SYSTEM - PISTON PUMP AND FILTER, HIGH FLOW CAPACITY
IMPIANTO IDRAULICO - POMPA E FILTRO DEI PISTONI, AD ALTA PORTATA
CIRCUIT HYDRAULIQUE - POMPE À PISTON ET FILTRE, DÉBIT ÉLEVÉ
HYDRAULIKANLAGE - KOLBENPUMPE UND FILTER, HOCHLEISTUNGS-DURCHFLUSSMENGE

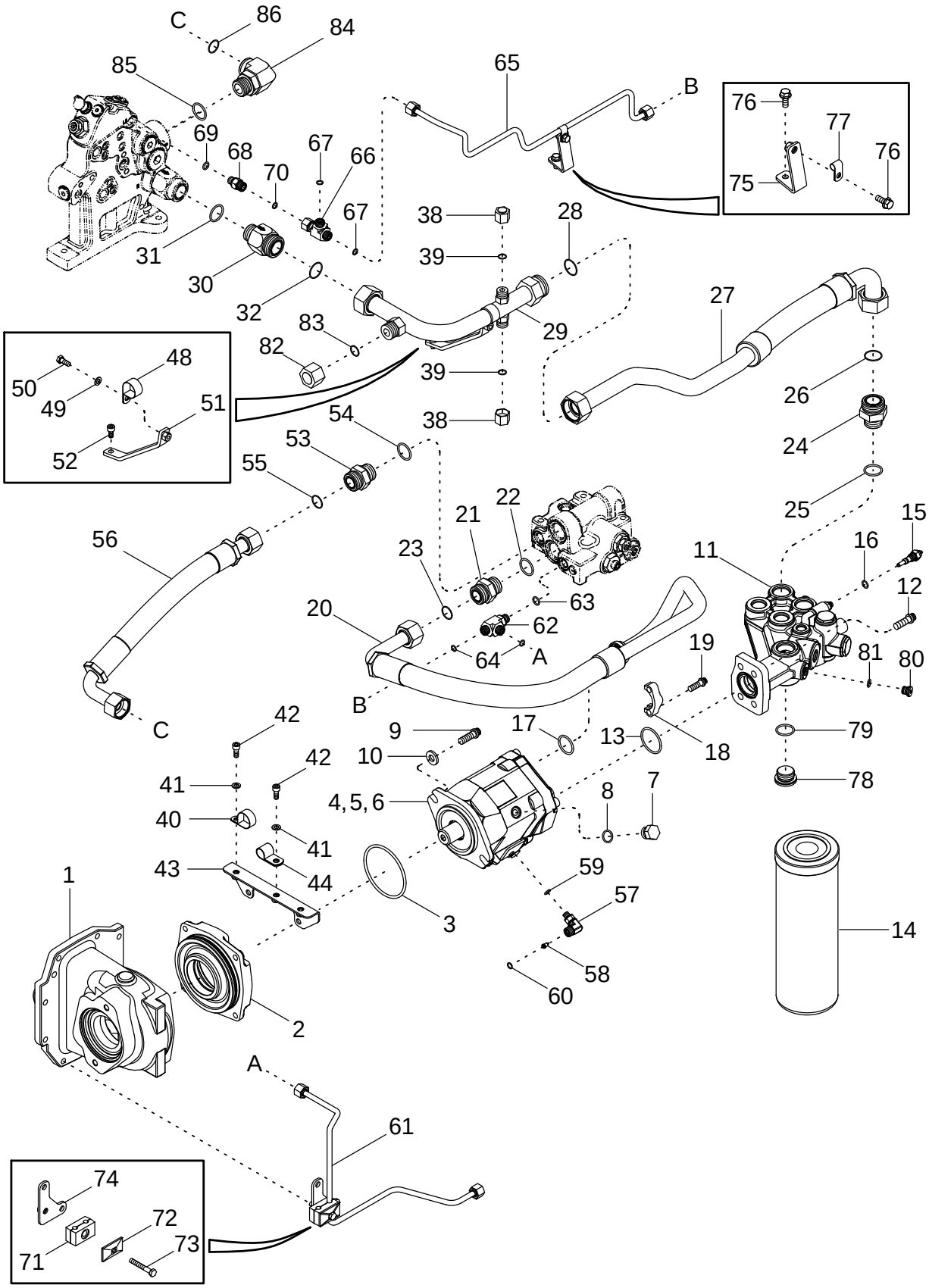

SISTEMA HIDRÁULICO - FILTRO Y BOMBA DE PISTÓN, CAPACIDAD DE FLUJO ALTA
SISTEMA HIDRÁULICO - BOMBA DO PISTÃO E FILTRO, CAPACIDADE DE FLUXO ELEVADO
HYDRAULISCH SYSTEEM - ZUIGERPOMP EN FILTER, HOGE DEBIETCAPACITEIT
HYDRAULIKSYSTEM - STEMPELPUMPE OG FILTER, HØJ GENNEMSTRØMNINGSKAPACITET

R	N	P.N.	MOD	Q	Description Denominacion	Descrizione Denominação	Description Beschrijving	Bezeichnung Beskrivelse	L.C.
49		895-11008		1	WASHER 9 x 16 x 1,6 mm ARANDELA	ROSETTA PIANA ANILHA	RONDELLE SLUITRING	BEILAGSCHEIBE FLADSKIVE	131R
50		614-8020		1	SCREW M8 x 20; 8.8 TORNILLO	VITE PARAFUSO	VIS SCHROEF	SCHRAUBE SKRUE	P136
51		450515A1		1	BRACKET PIEZA DE SOPORTE	STAFFA BRACADEIRA	PATTE FIXATION STEUNBEUGEL	HALTERUNG BESLAG	225S
52		864-8016		1	SCREW M8 x 16; 8.8 TORNILLO	VITE PARAFUSO	VIS SCHROEF	SCHRAUBE SKRUE	7450
53		700-105		1	CONNECTOR, HYD. 1-7/16 fc sl x 33 Or, Inc. 54, 55 RACOR	RACCORDO IDRAULICO CONECTOR	RACCORD VERBINDING	STUTZEN FORSKRUNING	020R
54		637-64296		1	O-RING 29,6 ID x 2,9 JUNTA HERMETICA	ANELLO TOROIDALE ANEL O	JOINT TORIQUE O-RING	O-RING O-RING	7176
55		238-6021		1	O-RING 15/16 ID x 1/16 JUNTA HERMETICA	ANELLO TOROIDALE ANEL O	JOINT TORIQUE O-RING	O-RING O-RING	7176
56		440561A1		1	TUBE ASSY. TUBO (CONJUNTO)	TUBO, COMPLESSIVO TUBO CONJUNTO	TUYAUTERIE TUBE ASSY.	ROHRLEITUNG TUBE ASSY.	P465
56	1	440561A1	a	1	TUBE ASSY. TUBO (CONJUNTO)	TUBO, COMPLESSIVO TUBO CONJUNTO	TUYAUTERIE TUBE ASSY.	ROHRLEITUNG TUBE ASSY.	P465
56		87413846	b	1	TUBE ASSY. TUBO (CONJUNTO)	TUBO, COMPLESSIVO TUBO CONJUNTO	TUYAUTERIE TUBE ASSY.	ROHRLEITUNG TUBE ASSY.	P465
57		451226A1		1	ELBOW Inc. 58, 59, 60 CODO	GOMITO JOELHO	COUDE ELLEBOOG	KNIESTÜCK VINKELROER	085G
58		133519C1		1	SCREEN PANTALLA PROTECTOR	SCHERMO ECRAN	ECRAN SCHERM	BILDSCHIRM SKAERM	047S
59		637-63093		1	O-RING 9,3 ID x 2,2 JUNTA HERMETICA	ANELLO TOROIDALE ANEL O	JOINT TORIQUE O-RING	O-RING O-RING	7176
60		238-6012		1	O-RING 3/8 ID x 1/16 JUNTA HERMETICA	ANELLO TOROIDALE ANEL O	JOINT TORIQUE O-RING	O-RING O-RING	7176
61		451209A1		1	TUBE ASSY. TUBO (CONJUNTO)	TUBO, COMPLESSIVO TUBO CONJUNTO	TUYAUTERIE TUBE ASSY.	ROHRLEITUNG TUBE ASSY.	P465
62		700-441		1	TEE 13/16 fc sl x 16 Or, Inc. 63, 64 RACOR-T	PEZZO A T TE	TE TEE	T-STÜCK T-STYKKE	9020
63		637-63113		1	O-RING 11,3 ID x 2,2 JUNTA HERMETICA	ANELLO TOROIDALE O-RING	JOINT THORIQUE O-RING	DICHTRING O-RING	055A
64		238-6014		2	O-RING 1/2 ID x 1/16 JUNTA HERMETICA	ANELLO TOROIDALE ANEL O	JOINT TORIQUE O-RING	O-RING O-RING	7176
65		433592A1		1	TUBE ASSY. TUBO (CONJUNTO)	TUBO, COMPLESSIVO TUBO CONJUNTO	TUYAUTERIE TUBE ASSY.	ROHRLEITUNG TUBE ASSY.	P465
66		701-422		1	TEE 11/16 fc sl x 11/16 sw, Inc. 67 RACOR-T	PEZZO A T TE	TE TEE	T-STÜCK T-STYKKE	9020
67		238-6012		2	O-RING 3/8 ID x 1/16 JUNTA HERMETICA	ANELLO TOROIDALE ANEL O	JOINT TORIQUE O-RING	O-RING O-RING	7176

(1) Order 87413846. Also Order 413993A1 REF 85 for Initial Replacement
(a) BSN AJB0300037
(b) ASN AJB0300037

HYDRAULIC SYSTEM - PISTON PUMP AND FILTER, HIGH FLOW CAPACITY
IMPIANTO IDRAULICO - POMPA E FILTRO DEI PISTONI, AD ALTA PORTATA
CIRCUIT HYDRAULIQUE - POMPE À PISTON ET FILTRE, DÉBIT ÉLEVÉ
HYDRAULIKANLAGE - KOLBENPUMPE UND FILTER, HOCHLEISTUNGS-DURCHFLUSSMENGE

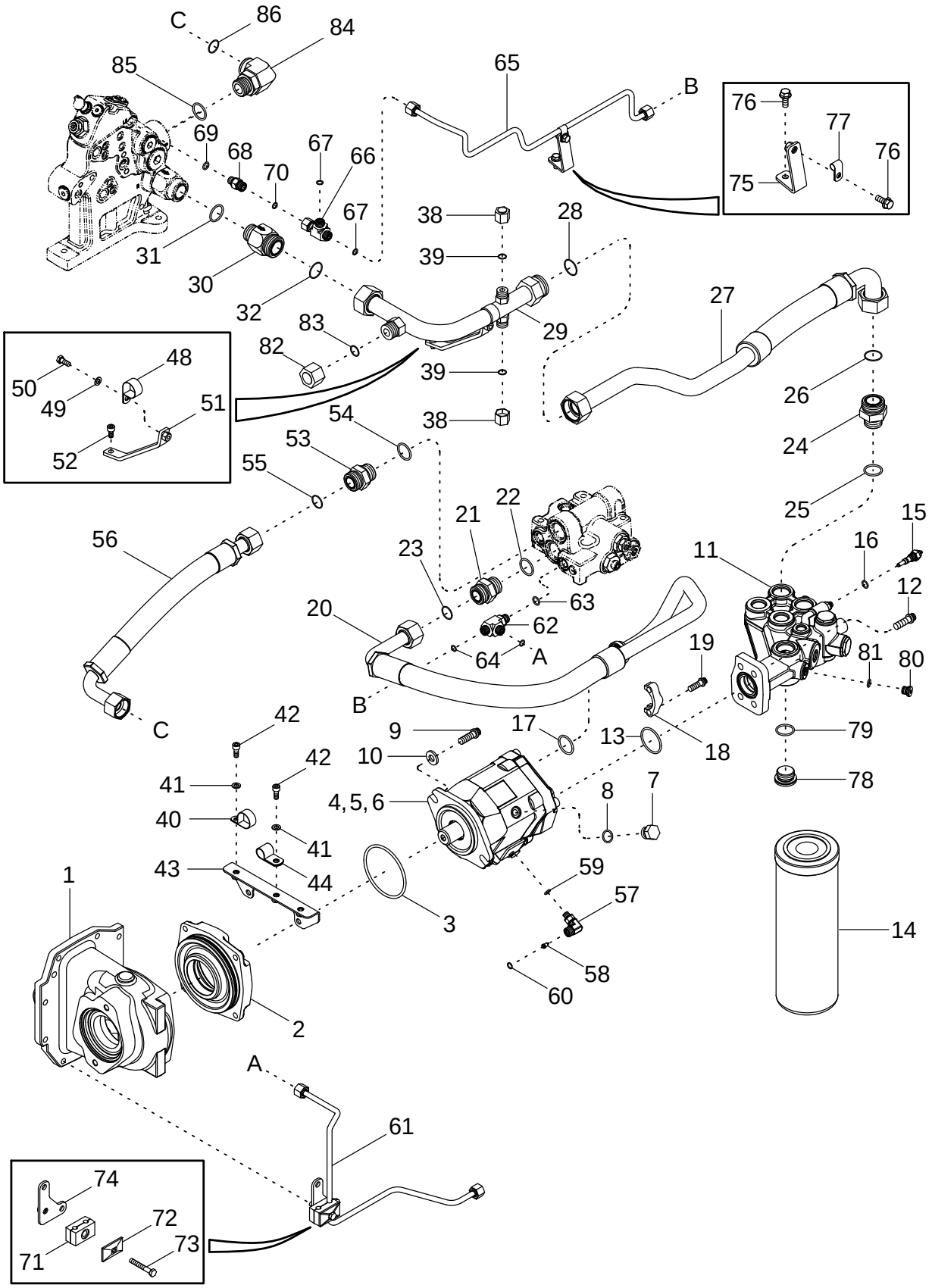

SISTEMA HIDRÁULICO - FILTRO Y BOMBA DE PISTÓN, CAPACIDAD DE FLUJO ALTA
SISTEMA HIDRÁULICO - BOMBA DO PISTÃO E FILTRO, CAPACIDADE DE FLUXO ELEVADO
HYDRAULISCH SYSTEEM - ZUIGERPOMP EN FILTER, HOGE DEBIETCAPACITEIT
HYDRAULIKSYSTEM - STEMPELPUMPE OG FILTER, HØJ GENNEMSTRØMNINGSKAPACITET

R	N	P.N.	MOD	Q	Description Denominacion	Descrizione Denominação	Description Beschrijving	Bezeichnung Beskrivelse	L.C.
68		223971A1		1	VALVE, CHECK Inc. 69, 70 VALVULA DE CIERRE	VALVOLA, DI RITEGNO VALVULA CHECAGEM	CLAPET ANTI-RETOUR INZETSTUK	RÜCKSCHLAGVENTIL KONTRAVENTIL	P394
69		637-63113		1	O-RING 11,3 ID x 2,2 JUNTA HERMETICA	ANELLO TOROIDALE O-RING	JOINT THORIQUE O-RING	DICHTRING O-RING	055A
70		238-6012		1	O-RING 3/8 ID x 1/16 JUNTA HERMETICA	ANELLO TOROIDALE ANEL O	JOINT TORIQUE O-RING	O-RING O-RING	7176
71		1546024C1		1	CLAMP COLLAR	MORSETTO BRACADEIRA	COLLIER CLAMP	SCHELLE CLAMP	1640
72		384870A1		1	PLATE PLACA	PIASTRA CHAPA	PLAQUE PLAAT	PLATTE PLADE	105P
73		814-8055		1	SCREW M8 x 55; 8.8 TORNILLO	VITE PARAFUSO	VIS SCHROEF	SCHRAUBE SKRUE	7450
74		451211A1		1	PLATE PLACA	PIASTRA CHAPA	PLAQUE PLAAT	PLATTE PLADE	105P
75		86988626		1	BRACKET PIEZA DE SOPORTE	STAFFA BRACADEIRA	PATTE FIXATION STEUNBEUGEL	HALTERUNG BESLAG	225S
76		844-8020		2	BOLT M8 x 20; 8.8 TORNILLO	BULLONE PARAFUSO	BOULON BOUT	SCHAUBENBOLZEN SKRUE	140B
77		515-2295		1	CLAMP 3/8 ID COLLAR	MORSETTO BRACADEIRA	COLLIER CLAMP	SCHELLE CLAMP	1640
80		221576A1		1	PLUG M14 Or, Inc. 81 TAPÓN	TAPPO BUJÃO	BOUCHON PLUG	STOPFEN PROP	050T
81		637-63113		1	O-RING 11,3 ID x 2,2 JUNTA HERMETICA	ANELLO TOROIDALE O-RING	JOINT THORIQUE O-RING	DICHTRING O-RING	055A
82		701-907		1	PLUG TAPÓN	TAPPO BUJAO	BOUCHON PLUG	STOPFEN PROP	6400
83		238-6018		1	O-RING 3/4 ID x 1/16 JUNTA HERMETICA	ANELLO TOROIDALE ANEL O	JOINT TORIQUE O-RING	O-RING O-RING	7176
84		700-105	a	1	CONNECTOR, HYD. 1-7/16 fc sl x 33 Or, Inc. 85, 86 RACOR	RACCORDO IDRAULICO CONECTOR	RACCORD VERBINDING	STUTZEN FORSKRUNING	020R
84		413993A1	b	1	ELBOW Inc. 85, 86 CODO	GOMITO JOELHO	COUDE ELLEBOOG	KNIESTÜCK VINKELROER	085G
85		637-64296		1	O-RING 29,6 ID x 2,9 JUNTA HERMETICA	ANELLO TOROIDALE ANEL O	JOINT TORIQUE O-RING	O-RING O-RING	7176
86		238-6021		1	O-RING 15/16 ID x 1/16 JUNTA HERMETICA	ANELLO TOROIDALE ANEL O	JOINT TORIQUE O-RING	O-RING O-RING	7176

(a) BSN AJB0300037
(b) ASN AJB0300037

08-06		p1	12/02

HYDRAULIC SYSTEM - REGULATED PRESSURE
IMPIANTO IDRAULICO - PRESSIONE REGOLATA
CIRCUIT HYDRAULIQUE - PRESSION RÉGULÉE
HYDRAULIKANLAGE - P1-DRUCK

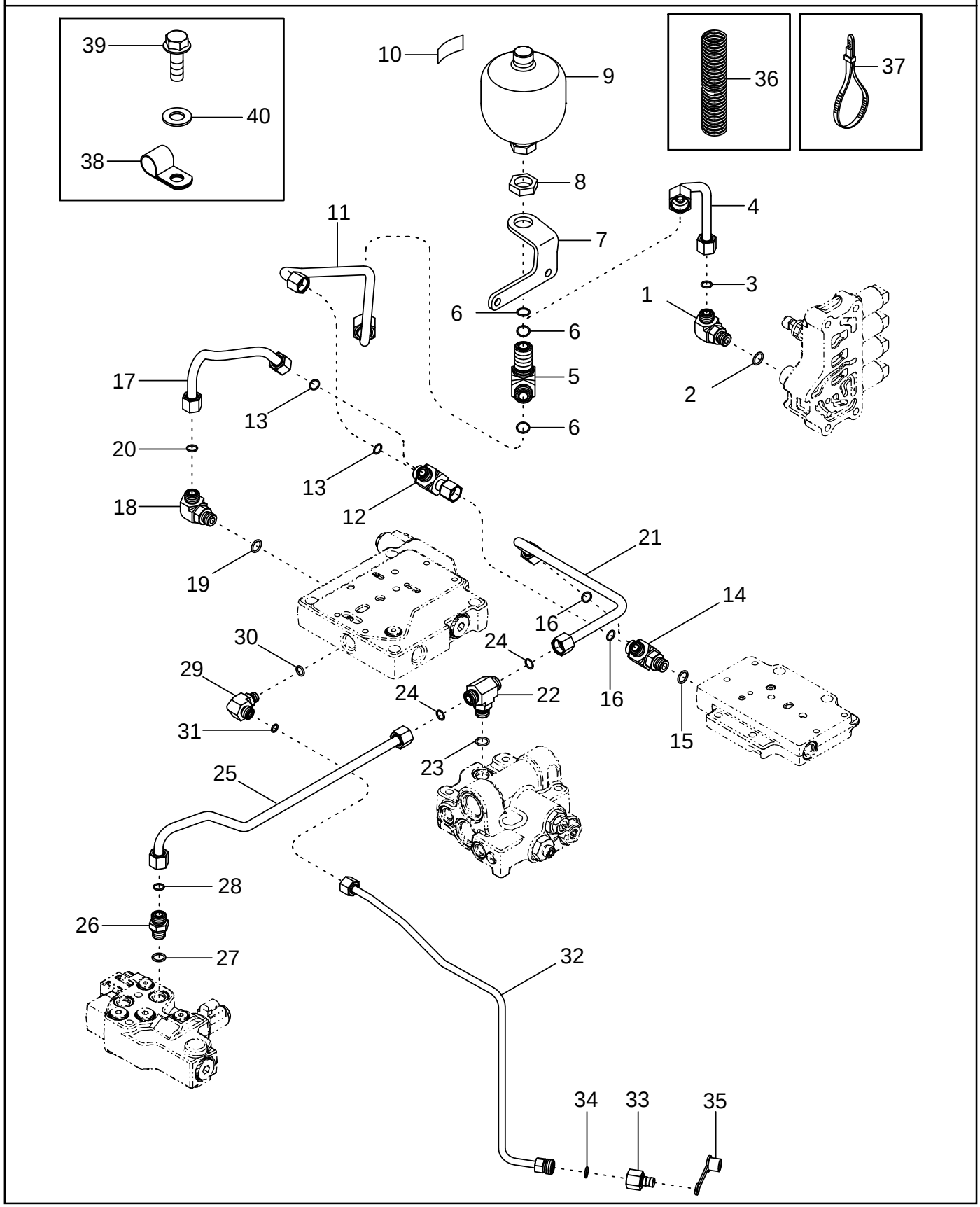

SISTEMA HIDRÁULICO - PRESIÓN REGULADA
PRESSÃO REGULADA DO SISTEMA HIDRÁULICO
HYDRAULISCH SYSTEEM - GEREGULEERDE DRUK
HYDRAULIKSYSTEM - REGULERET TRYK

R	N	P.N.	MOD	Q	Description Denominacion	Descrizione Denominação	Description Beschrijving	Bezeichnung Beskrivelse	L.C.
1		700-305		1	ELBOW 13/16 fc sl x 18 Or, Inc. 2, 3				
						GOMITO	COUDE	KNIESTÜCK	2940
					CODO	JOELHO	ELLEBOOG	VINKELRØR	
2		637-63153		1	O-RING 15,3 ID x 2,2	ANELLO TOROIDALE	JOINT THORIQUE	DICHTRING	055A
					JUNTA HERMETICA	O-RING	O-RING	O-RING	
3		238-6014		1	O-RING 1/2 ID x 1/16	ANELLO TOROIDALE	JOINT TORIQUE	O-RING	7176
					JUNTA HERMETICA	ANEL O	O-RING	O-RING	
4		87405121		1	TUBE ASSY.	TUBO, COMPLESSIVO	TUYAUTERIE	ROHRLEITUNG	P465
					TUBO (CONJUNTO)	TUBO CONJUNTO	TUBE ASSY.	TUBE ASSY.	
5		701-454		1	TEE 1 fc sl blkhd, Inc. 6	PEZZO A T	TE	T-STÜCK	9020
					RACOR-T	TE	TEE	T-STYKKE	
6		238-6016		3	O-RING 5/8 ID x 1/16	ANELLO TOROIDALE	JOINT TORIQUE	O-RING	7176
					JUNTA HERMETICA	ANEL O	O-RING	O-RING	
7		86988829		1	BRACKET	STAFFA	PATTE FIXATION	HALTERUNG	225S
					PIEZA DE SOPORTE	BRACADEIRA	STEUNBEUGEL	BESLAG	
8		701-919		1	NUT 1 in	DADO	ECROU	MUTTER	5780
					TUERCA	PORCA	MOER	MØTRIK	
9		86984247		1	ACCUMULATOR	ACCUMULATORE	ACCUMULATEUR	DRUCKBEHÄLTER	037A
					ACUMULADOR	ACUMULADOR	ACCUMULATOR	AKKUMULATOR	
10		82029752		1	PLAQUE, DATA	TARGHETTA	PLAQUE MINERALOGIQU	TYPENSHILD	065T
					PLACA INDICADORA	PLACA IDENTIFICADORA	IDENTIFIKATIEPLAATJE	SKILT	
11		86988918		1	TUBE ASSY.	TUBO, COMPLESSIVO	TUYAUTERIE	ROHRLEITUNG	P465
					TUBO (CONJUNTO)	TUBO CONJUNTO	TUBE ASSY.	TUBE ASSY.	
12		701-416		1	TEE 13/16 fc sl x 13/16 sw, Inc. 13				
						PEZZO A T	TE	T-STÜCK	9020
					RACOR-T	TE	TEE	T-STYKKE	
13		238-6014		2	O-RING 1/2 ID x 1/16	ANELLO TOROIDALE	JOINT TORIQUE	O-RING	7176
					JUNTA HERMETICA	ANEL O	O-RING	O-RING	
14		700-412		1	TEE 13/16 fc sl x 18 Or, Inc. 15, 16				
						PEZZO A T	TE	T-STÜCK	9020
					RACOR-T	TE	TEE	T-STYKKE	
15		637-63153		1	O-RING 15,3 ID x 2,2	ANELLO TOROIDALE	JOINT THORIQUE	DICHTRING	055A
					JUNTA HERMETICA	O-RING	O-RING	O-RING	
16		238-6014		1	O-RING 1/2 ID x 1/16	ANELLO TOROIDALE	JOINT TORIQUE	O-RING	7176
					JUNTA HERMETICA	ANEL O	O-RING	O-RING	
17		308172A1		1	PIPE	TUBO	TUYAU	ROHR	200T
					CUELLO DE CARGA	TUBO DE ENCHIMENTO	OPVULPIJP	PAAFYLDNINGSSTUDS	
18		700-305		1	ELBOW 13/16 fc sl x 18 Or, Inc. 19, 20				
						GOMITO	COUDE	KNIESTÜCK	2940
					CODO	JOELHO	ELLEBOOG	VINKELRØR	
19		637-63153		1	O-RING 15,3 ID x 2,2	ANELLO TOROIDALE	JOINT THORIQUE	DICHTRING	055A
					JUNTA HERMETICA	O-RING	O-RING	O-RING	
20		238-6014		1	O-RING 1/2 ID x 1/16	ANELLO TOROIDALE	JOINT TORIQUE	O-RING	7176
					JUNTA HERMETICA	ANEL O	O-RING	O-RING	
21		433589A1		1	TUBE ASSY.	TUBO, COMPLESSIVO	TUYAUTERIE	ROHRLEITUNG	P465
					TUBO (CONJUNTO)	TUBO CONJUNTO	TUBE ASSY.	TUBE ASSY.	
22		700-402		1	TEE 13/16 fc sl x 18 Or, Inc. 23, 24				
						PEZZO A T	TE	T-STÜCK	9020
					RACOR-T	TE	TEE	T-STYKKE	

HYDRAULIC SYSTEM - REGULATED PRESSURE
IMPIANTO IDRAULICO - PRESSIONE REGOLATA
CIRCUIT HYDRAULIQUE - PRESSION RÉGULÉE
HYDRAULIKANLAGE - P1-DRUCK

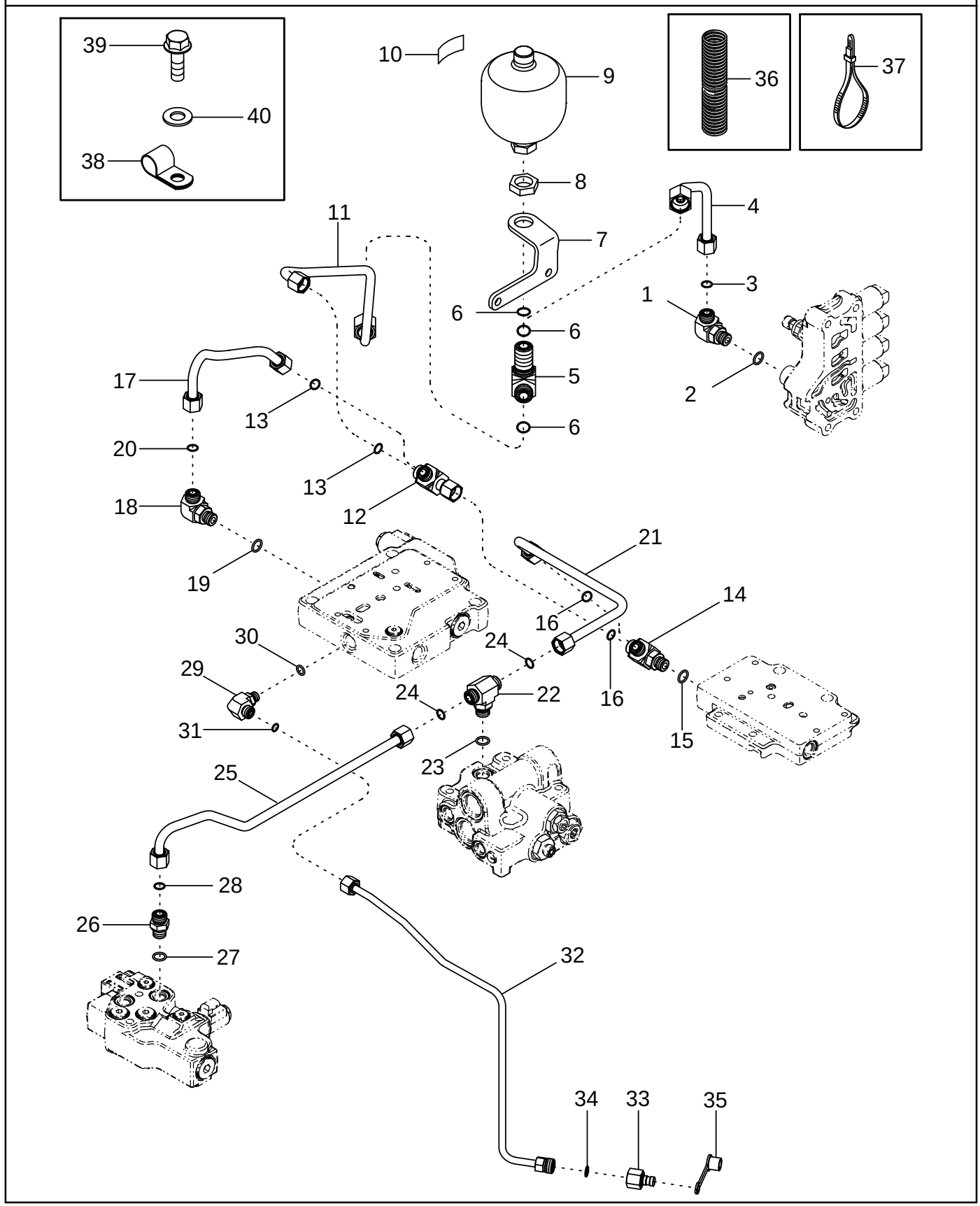

SISTEMA HIDRÁULICO - PRESIÓN REGULADA
PRESSÃO REGULADA DO SISTEMA HIDRÁULICO
HYDRAULISCH SYSTEEM - GEREGULEERDE DRUK
HYDRAULIKSYSTEM - REGULERET TRYK

R	N	P.N.	MOD	Q	Description Denominacion	Descrizione Denominação	Description Beschrijving	Bezeichnung Beskrivelse	L.C.
23		637-63153		1	O-RING 15,3 ID x 2,2 JUNTA HERMETICA	ANELLO TOROIDALE O-RING	JOINT THORIQUE O-RING	DICHTRING O-RING	055A
24		238-6014		2	O-RING 1/2 ID x 1/16 JUNTA HERMETICA	ANELLO TOROIDALE ANEL O	JOINT TORIQUE O-RING	O-RING O-RING	7176
25		450512A1		1	TUBE ASSY. TUBO (CONJUNTO)	TUBO, COMPLESSIVO TUBO CONJUNTO	TUYAUTERIE TUBE ASSY.	ROHRLEITUNG TUBE ASSY.	P465
26		700-102		1	CONNECTOR, HYD. 13/16 fc sl x 18 Or, Inc. 27, 28 RACOR	RACCORDO IDRAULICO CONECTOR	RACCORD VERBINDING	STUTZEN FORSKRUNING	020R
27		637-63153		1	O-RING 15,3 ID x 2,2 JUNTA HERMETICA	ANELLO TOROIDALE O-RING	JOINT THORIQUE O-RING	DICHTRING O-RING	055A
28		238-6014		1	O-RING 1/2 ID x 1/16 JUNTA HERMETICA	ANELLO TOROIDALE ANEL O	JOINT TORIQUE O-RING	O-RING O-RING	7176
29		700-303		1	ELBOW 11/16 fc sl x 14 Or, Inc. 30, 31 CODO	GOMITO JOELHO	COUDE ELLEBOOG	KNIESTÜCK VINKELRØR	2940
30		637-63113		1	O-RING 11,3 ID x 2,2 JUNTA HERMETICA	ANELLO TOROIDALE O-RING	JOINT THORIQUE O-RING	DICHTRING O-RING	055A
31		238-6012		1	O-RING 3/8 ID x 1/16 JUNTA HERMETICA	ANELLO TOROIDALE ANEL O	JOINT TORIQUE O-RING	O-RING O-RING	7176
32		451059A1		1	TUBE ASSY. TUBO (CONJUNTO)	TUBO, COMPLESSIVO TUBO CONJUNTO	TUYAUTERIE TUBE ASSY.	ROHRLEITUNG TUBE ASSY.	P465
33		322529A1		1	COUPLING Diagnostic ELEMENTO DE ACOPLAI	TESTA A CAMPANA ELEMENTO DE ACOPLAI	CHAPE KOPPELING	GLOCKENKOPF KOBLING	109T
34		238-6014		1	O-RING 1/2 ID x 1/16 JUNTA HERMETICA	ANELLO TOROIDALE ANEL O	JOINT TORIQUE O-RING	O-RING O-RING	7176
35		143349A1		1	CAP TAPON DEL DEPOSITO	TAPPO SERBATOIO TAMPAO DE RESERVAT	CHAPEAU RESERVOIRDOP	KAPPE TANKDAEKSEL	052T
36		87413833		1	CONDUIT (If Equipped) TUBERIA	CONDOTTA CONDUITE	CONDUIT CONDUIT	LEITUNG RENDE	1920
37		L11541		2	STRAP (If Equipped) BANDA	BANDELLA BANDA	SANGLE RIEM	GURT STROP	532B
38		515-23127		1	CLAMP COLLAR	MORSETTO BRACADEIRA	COLLIER CLAMP	SCHELLE CLAMP	1640
39		614-10020		1	SCREW M10 x 20; 8,8 TORNILLO	VITE PARAFUSO	VIS SCHROEF	SCHRAUBE SKRUE	P136
40		895-18010		1	WASHER 10,5 x 18 x 1,6 mm ARANDELA	ROSETTA PIANA ANILHA	RONDELLE SLUITRING	SCHEIBE FLADSKIVE	9720

HYDRAULIC SYSTEM - CREEP SPEED
IMPIANTO IDRAULICO - MARCIA SUPER RIDOTTA
CIRCUIT HYDRAULIQUE - VITESSES LENTES
HYDRAULIKANLAGE - LANGSAMGRUPPE

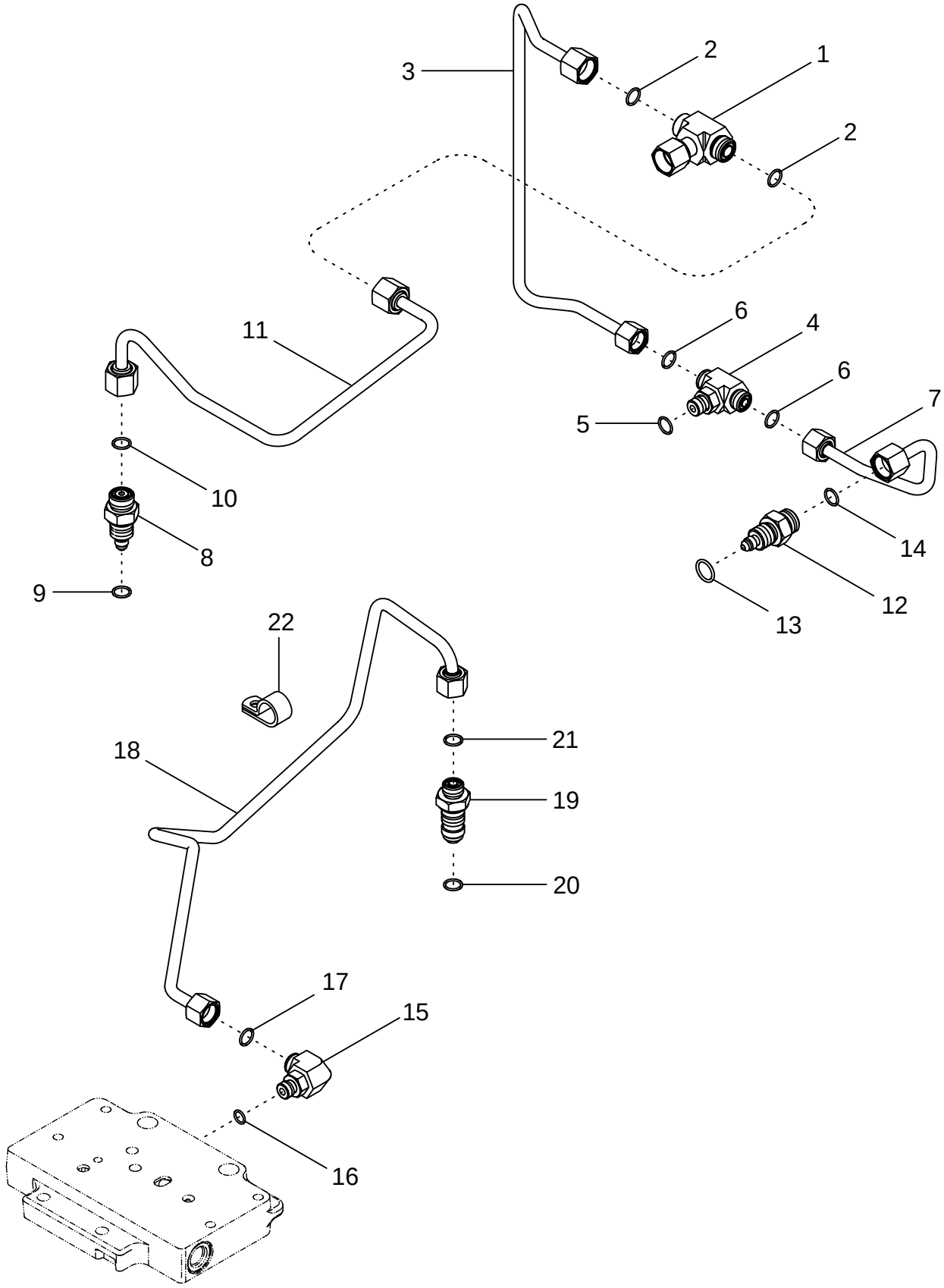

SISTEMA HIDRÁULICO - VELOCIDAD ULTRALENTA
SISTEMA HIDRÁULICO - REDUÇÃO DE VELOCIDADE
HYDRAULISCH SYSTEEM - KRUIPVERSNELLING
HYDRAULIKSYSTEM - KRYBEHASTIGHED

R	N	P.N.	MOD	Q	Description Denominacion	Descrizione Denominação	Description Beschrijving	Bezeichnung Beskrivelse	L.C.
1		701-411		1	TEE 13/16 fc sl x 13/16 sw, Inc. 2				
						PEZZO A T	TE	T-STÜCK	9020
					RACOR-T	TE	TEE	T-STYKKE	
2		238-6014		2	O-RING 1/2 ID x 1/16	ANELLO TOROIDALE	JOINT TORIQUE	O-RING	7176
					JUNTA HERMETICA	ANEL O	O-RING	O-RING	
3		282365A1		1	PIPE	TUBO	TUYAU	ROHR	6240
					CUELLO DE CARGA	TUBO DE ENCHIMENTO	OPVULPIJP	PAAFYLDNINGSSTUDS	
4		700-401		1	TEE 11/16 fc sl x 14 Or, Inc. 5, 6				
						PEZZO A T	TE	T-STÜCK	9020
					RACOR-T	TE	TEE	T-STYKKE	
5		637-63113		1	O-RING 11,3 ID x 2,2	ANELLO TOROIDALE	JOINT THORIQUE	DICHTRING	055A
					JUNTA HERMETICA	O-RING	O-RING	O-RING	
6		238-6012		2	O-RING 3/8 ID x 1/16	ANELLO TOROIDALE	JOINT TORIQUE	O-RING	7176
					JUNTA HERMETICA	ANEL O	O-RING	O-RING	
7		282278A1		1	PIPE	TUBO	TUYAU	ROHR	6240
					CUELLO DE CARGA	TUBO DE ENCHIMENTO	OPVULPIJP	PAAFYLDNINGSSTUDS	
8		93105C1		1	UNION	RACCORDO A GOMITO	UNION	VERBAND	9560
					CONEXION	UNIAO	KOPPELING	FORSKRUNING	
9		237-6008		1	O-RING 41/64 ID x 3/32	ANELLO TOROIDALE	JOINT THORIQUE	DICHTRING	055A
					JUNTA HERMETICA	O-RING	O-RING	O-RING	
10		238-6014		1	O-RING 1/2 ID x 1/16	ANELLO TOROIDALE	JOINT TORIQUE	O-RING	7176
					JUNTA HERMETICA	ANEL O	O-RING	O-RING	
11		299160A1	a	1	PIPE	TUBO	TUYAU	ROHR	6240
					CUELLO DE CARGA	TUBO DE ENCHIMENTO	OPVULPIJP	PAAFYLDNINGSSTUDS	
11		87440741	b	1	PIPE	TUBO	TUYAU	ROHR	200T
					CUELLO DE CARGA	TUBO DE ENCHIMENTO	OPVULPIJP	PAAFYLDNINGSSTUDS	
12		93105C1		1	UNION	RACCORDO A GOMITO	UNION	VERBAND	9560
					CONEXION	UNIAO	KOPPELING	FORSKRUNING	
13		238-6014		1	O-RING 1/2 ID x 1/16	ANELLO TOROIDALE	JOINT TORIQUE	O-RING	7176
					JUNTA HERMETICA	ANEL O	O-RING	O-RING	
14		237-6008		1	O-RING 41/64 ID x 3/32	ANELLO TOROIDALE	JOINT THORIQUE	DICHTRING	055A
					JUNTA HERMETICA	O-RING	O-RING	O-RING	
15		700-304		1	ELBOW 11/16 fc sl x 14 Or, Inc. 16, 17				
						GOMITO	COUDE	KNIESTÜCK	2940
					CODO	JOELHO	ELLEBOOG	VINKELRØR	
16		637-63113		1	O-RING 11,3 ID x 2,2	ANELLO TOROIDALE	JOINT THORIQUE	DICHTRING	055A
					JUNTA HERMETICA	O-RING	O-RING	O-RING	
17		238-6012		1	O-RING 3/8 ID x 1/16	ANELLO TOROIDALE	JOINT TORIQUE	O-RING	7176
					JUNTA HERMETICA	ANEL O	O-RING	O-RING	
18		297622A2	c	1	PIPE	TUBO	TUYAU	ROHR	200T
					CUELLO DE CARGA	TUBO DE ENCHIMENTO	OPVULPIJP	PAAFYLDNINGSSTUDS	
18		87446665	d	1	PIPE	TUBO	TUYAU	ROHR	200T
					CUELLO DE CARGA	TUBO DE ENCHIMENTO	OPVULPIJP	PAAFYLDNINGSSTUDS	
19		93103C1		1	UNION	RACCORDO A GOMITO	UNION	VERBAND	9560
					CONEXION	UNIAO	KOPPELING	FORSKRUNING	

(a) BSN AJB0355338
(b) ASN AJB0355338
(c) BSN AJB0355923
(d) ASN AJB0355923

HYDRAULIC SYSTEM - CREEP SPEED
IMPIANTO IDRAULICO - MARCIA SUPER RIDOTTA
CIRCUIT HYDRAULIQUE - VITESSES LENTES
HYDRAULIKANLAGE - LANGSAMGRUPPE

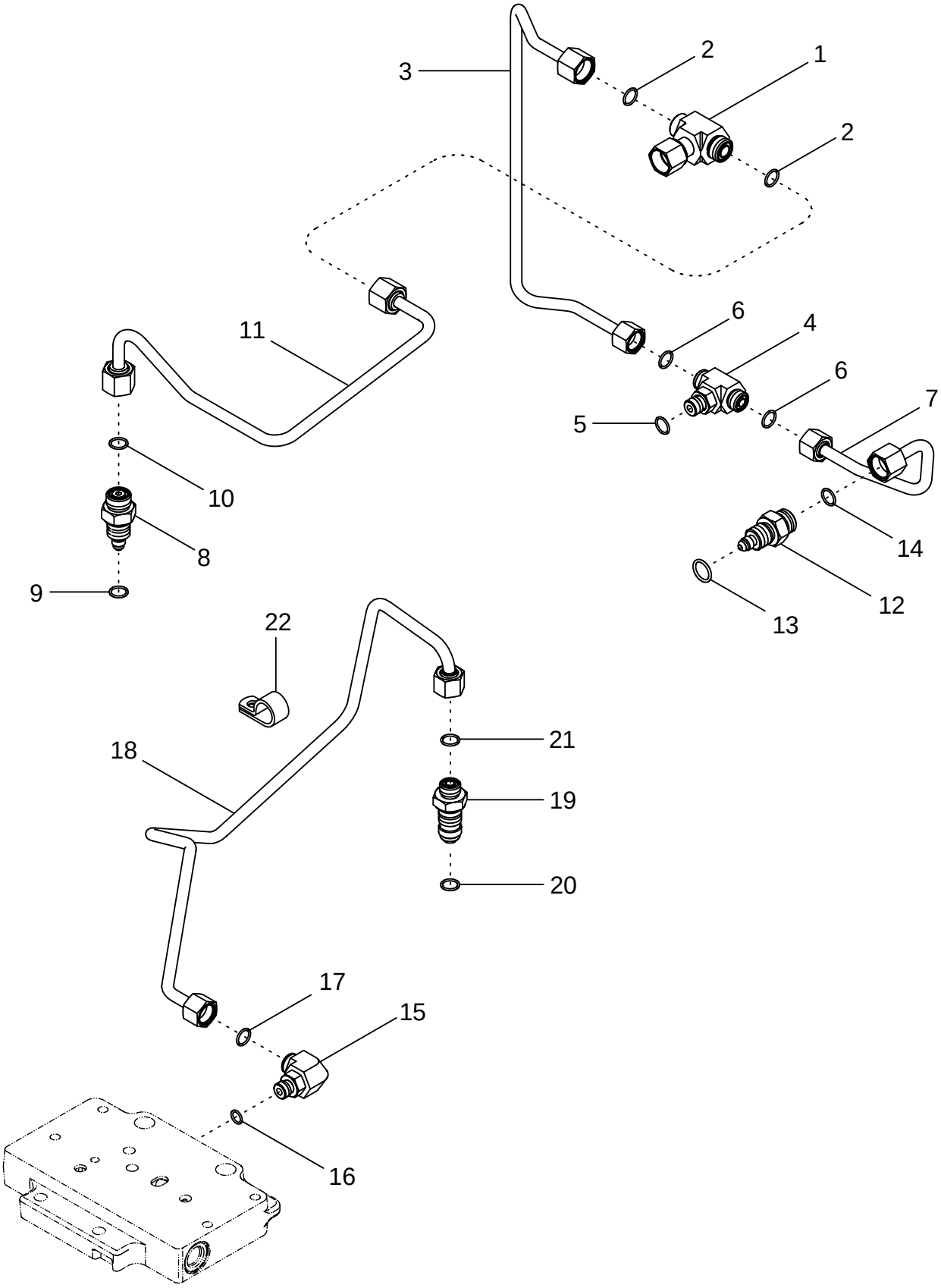

SISTEMA HIDRÁULICO - VELOCIDAD ULTRALENTA
SISTEMA HIDRÁULICO - REDUÇÃO DE VELOCIDADE
HYDRAULISCH SYSTEEM - KRUIPVERSNELLING
HYDRAULIKSYSTEM - KRYBEHASTIGHED

R	N	P.N.	MOD	Q	Description Denominacion	Descrizione Denominação	Description Beschrijving	Bezeichnung Beskrivelse	L.C.
20		237-6008		1	O-RING 41/64 ID x 3/32 JUNTA HERMETICA	ANELLO TOROIDALE O-RING	JOINT THORIQUE O-RING	DICHTRING O-RING	055A
21		238-6012		1	O-RING 3/8 ID x 1/16 JUNTA HERMETICA	ANELLO TOROIDALE ANEL O	JOINT TORIQUE O-RING	O-RING O-RING	7176
22		515-2495		1	CLAMP 7/16 ID COLLAR	MORSETTO BRACADEIRA	COLLIER CLAMP	SCHELLE CLAMP	1640

08-08		p1	09/04

HYDRAULIC SYSTEM - TRANSMISSION LUBE
IMPIANTO IDRAULICO - LUBRIFICAZIONE DELLA TRASMISSIONE
CIRCUIT HYDRAULIQUE - GRAISSAGE DE LA TRANSMISSION
HYDRAULIKANLAGE - GETRIEBESCHMIERUNG

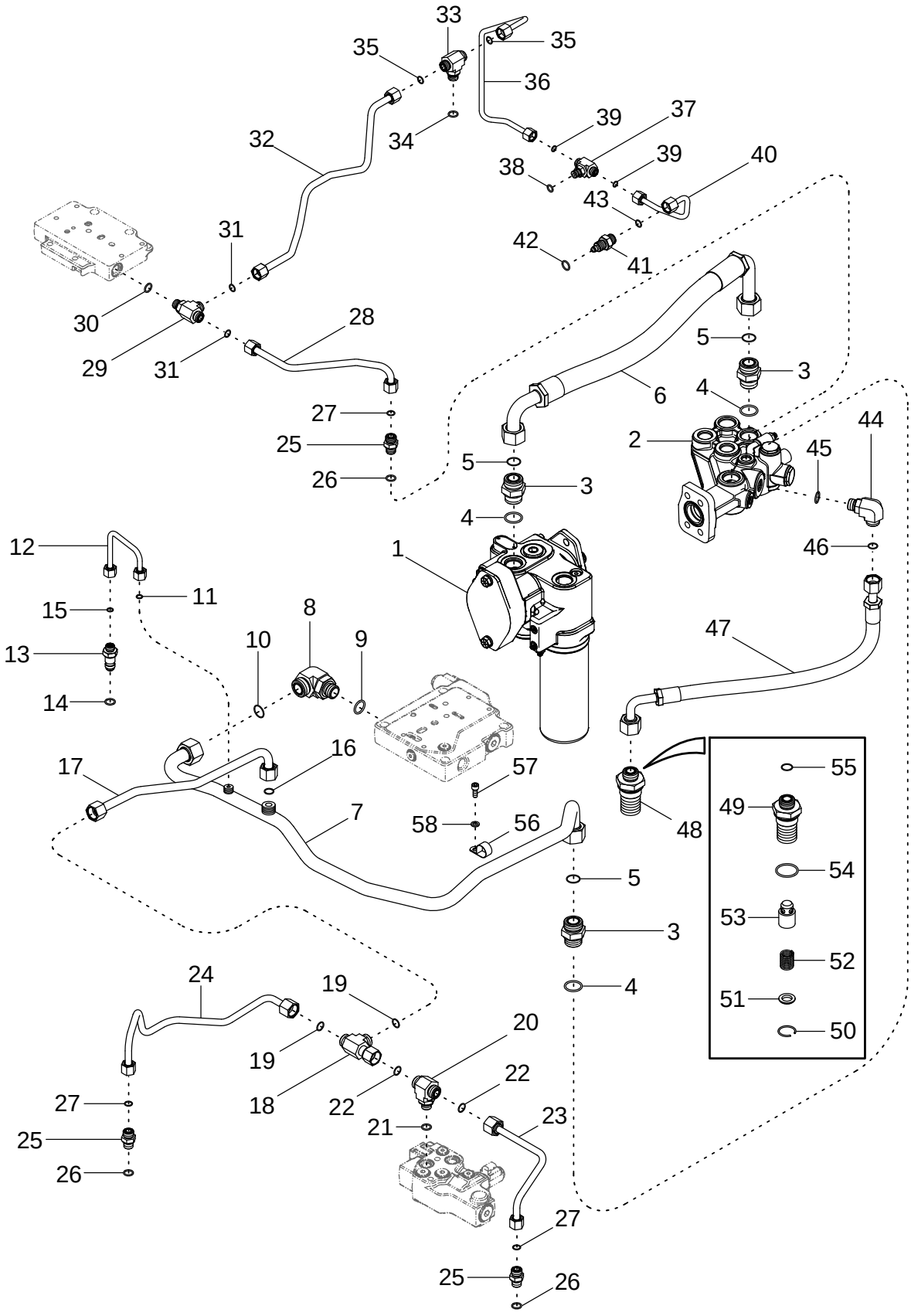

SISTEMA HIDRÁULICO - LUBRICACIÓN DE TRANSMISIÓN
SISTEMA HIDRÁULICO - LUBRIFICAÇÃO DA TRANSMISSÃO
HYDRAULISCH SYSTEEM - SMERING TRANSMISSIE
HYDRAULIKSYSTEM - TRANSMISSIONSSMØRING

R	N	P.N.	MOD	Q	Description Denominacion	Descrizione Denominação	Description Beschrijving	Bezeichnung Beskrivelse	L.C.
1		401363A3		1	PUMP Charge BOMBA	POMPA BOMBA	POMPE PUMP	PUMPE PUMPE	6570
2		401600A1		1	HEAD ASSY. Filter CABEZA (CONJUNTO)	TESTA, COMPLESSIVO CABECA CONJUNTO	TETE (ASSEMBLEE) HEAD ASSY.	KOPF (KPLT.) HEAD ASSY.	P605
3		700-105		3	CONNECTOR, HYD. 1-7/16 fc sl x 33 Or, Inc. 4, 5 RACOR	RACCORDO IDRAULICO CONECTOR	RACCORD VERBINDING	STUTZEN FORSKRUNING	020R
4		637-64296		1	O-RING 29,6 ID x 2,9 JUNTA HERMETICA	ANELLO TOROIDALE ANEL O	JOINT TORIQUE O-RING	O-RING O-RING	7176
5		238-6021		1	O-RING 15/16 ID x 1/16 JUNTA HERMETICA	ANELLO TOROIDALE ANEL O	JOINT TORIQUE O-RING	O-RING O-RING	7176
6		451064A1		1	HOSE MANGA	MANICOTTO FLESSIBILE TUBO FLEXIVEL	FLEXIBLE FLEXIBELE BUIS	SCHLAUCH SLANGE	030M
7	1	87415008		1	TUBE, HYD TUBERIA RIGIDA	TUBAZIONE RIGIDA TUBAGEM RIGIDA	TUYAU HYDRAULIQUE F BUISLEIDING	LEITUNG, HYDRAULIK RØRFOERING	190T
8		87010650		1	ELBOW 1-7/16 fc sl x 27 Or, Inc. 9, 10 CODO	GOMITO COTOVELO	COUDE ELBOW	ROHRKNIE ELBOW	P549
9		637-64236		1	O-RING 23,6 ID x 2,9 JUNTA HERMETICA	ANELLO TOROIDALE ANEL O	JOINT TORIQUE O-RING	O-RING O-RING	7176
10		238-6021		1	O-RING 15/16 ID x 1/16 JUNTA HERMETICA	ANELLO TOROIDALE ANEL O	JOINT TORIQUE O-RING	O-RING O-RING	7176
11		238-6016		1	O-RING 5/8 ID x 1/16 JUNTA HERMETICA	ANELLO TOROIDALE ANEL O	JOINT TORIQUE O-RING	O-RING O-RING	7176
12		434850A1		1	TUBE ASSY. TUBO (CONJUNTO)	TUBO, COMPLESSIVO TUBO CONJUNTO	TUYAUTERIE TUBE ASSY.	ROHRLEITUNG TUBE ASSY.	P465
13		308181A1		1	FITTING CONEXION	RACCORDO CONEXAO	RACCORD FITTING	ANSCHLUSSSTÜCK FITTING	3300
14		237-6008		1	O-RING 41/64 ID x 3/32 JUNTA HERMETICA	ANELLO TOROIDALE O-RING	JOINT THORIQUE O-RING	DICHTRING O-RING	055A
15		238-6016		1	O-RING 5/8 ID x 1/16 JUNTA HERMETICA	ANELLO TOROIDALE ANEL O	JOINT TORIQUE O-RING	O-RING O-RING	7176
16		238-6016		1	O-RING 5/8 ID x 1/16 JUNTA HERMETICA	ANELLO TOROIDALE ANEL O	JOINT TORIQUE O-RING	O-RING O-RING	7176
17	2	87415005		1	TUBE ASSY. TUBO (CONJUNTO)	TUBO, COMPLESSIVO TUBO CONJUNTO	TUYAUTERIE TUBE ASSY.	ROHRLEITUNG TUBE ASSY.	P465
18		701-433		1	TEE 1 fc sl x 1 sw, Inc. 19 RACOR-T	PEZZO A T TE	TE TEE	T-STÜCK T-STYKKE	9020
19		238-6016		2	O-RING 5/8 ID x 1/16 JUNTA HERMETICA	ANELLO TOROIDALE ANEL O	JOINT TORIQUE O-RING	O-RING O-RING	7176
20		87016910		1	TEE 1 fc sl x 18 Or, Inc. 21, 22 RACOR-T	PEZZO A T TE	TE TEE	T-STÜCK T-STYKKE	9020
21		637-63153		1	O-RING 15,3 ID x 2,2 JUNTA HERMETICA	ANELLO TOROIDALE O-RING	JOINT THORIQUE O-RING	DICHTRING O-RING	055A
22		238-6016		1	O-RING 5/8 ID x 1/16 JUNTA HERMETICA	ANELLO TOROIDALE ANEL O	JOINT TORIQUE O-RING	O-RING O-RING	7176

(1) BSN AJB0302120 Also Order 87415005 and 451179A2 For Initial Replacement
(2) BSN AJB0302120 Also Order 87415008 and 451179A2 For Initial Replacement

HYDRAULIC SYSTEM - TRANSMISSION LUBE
IMPIANTO IDRAULICO - LUBRIFICAZIONE DELLA TRASMISSIONE
CIRCUIT HYDRAULIQUE - GRAISSAGE DE LA TRANSMISSION
HYDRAULIKANLAGE - GETRIEBESCHMIERUNG

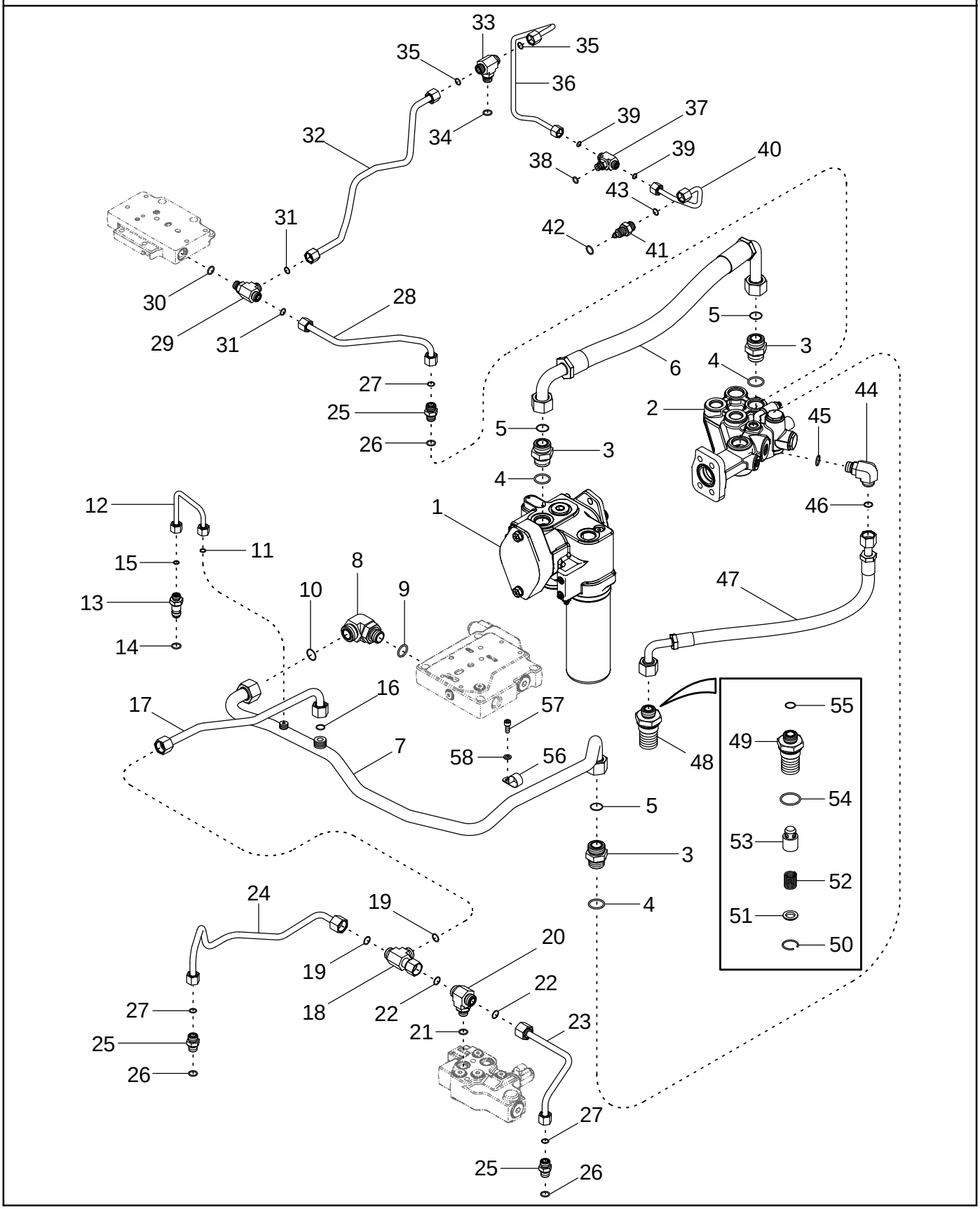

SISTEMA HIDRÁULICO - LUBRICACIÓN DE TRANSMISIÓN
SISTEMA HIDRÁULICO - LUBRIFICAÇÃO DA TRANSMISSÃO
HYDRAULISCH SYSTEEM - SMERING TRANSMISSIE
HYDRAULIKSYSTEM - TRANSMISSIONSSMØRING

R	N	P.N.	MOD	Q	Description Denominacion	Descrizione Denominação	Description Beschrijving	Bezeichnung Beskrivelse	L.C.
23		450509A1		1	TUBE ASSY. TUBO (CONJUNTO)	TUBO, COMPLESSIVO TUBO CONJUNTO	TUYAUTERIE TUBE ASSY.	ROHRLEITUNG TUBE ASSY.	P465
24		450510A1		1	TUBE ASSY. TUBO (CONJUNTO)	TUBO, COMPLESSIVO TUBO CONJUNTO	TUYAUTERIE TUBE ASSY.	ROHRLEITUNG TUBE ASSY.	P465
25		700-102		3	CONNECTOR, HYD. 13/16 fc sl x 18 Or, Inc. 26, 27 RACOR	RACCORDO IDRAULICO CONECTOR	RACCORD VERBINDING	STUTZEN FORSKRUNING	020R
26		637-63153		1	O-RING 15,3 ID x 2,2 JUNTA HERMETICA	ANELLO TOROIDALE O-RING	JOINT THORIQUE O-RING	DICHTRING O-RING	055A
27		238-6014		1	O-RING 1/2 ID x 1/16 JUNTA HERMETICA	ANELLO TOROIDALE ANEL O	JOINT TORIQUE O-RING	O-RING O-RING	7176
28		451060A1		1	TUBE ASSY. TUBO (CONJUNTO)	TUBO, COMPLESSIVO TUBO CONJUNTO	TUYAUTERIE TUBE ASSY.	ROHRLEITUNG TUBE ASSY.	P465
29		700-412		1	TEE 13/16 fc sl x 18 Or, Inc. 30, 31 RACOR-T	PEZZO A T TE	TE TEE	T-STÜCK T-STYKKE	9020
30		637-63153		1	O-RING 15,3 ID x 2,2 JUNTA HERMETICA	ANELLO TOROIDALE O-RING	JOINT THORIQUE O-RING	DICHTRING O-RING	055A
31		238-6014		1	O-RING 1/2 ID x 1/16 JUNTA HERMETICA	ANELLO TOROIDALE ANEL O	JOINT TORIQUE O-RING	O-RING O-RING	7176
32		437336A1	a	1	TUBE ASSY. TUBO (CONJUNTO)	TUBO, COMPLESSIVO TUBO CONJUNTO	TUYAUTERIE TUBE ASSY.	ROHRLEITUNG TUBE ASSY.	P465
32		437336A2	b	1	TUBE ASSY. TUBO (CONJUNTO)	TUBO, COMPLESSIVO TUBO CONJUNTO	TUYAUTERIE TUBE ASSY.	ROHRLEITUNG TUBE ASSY.	P465
33		700-402		1	TEE 13/16 fc sl x 18 Or, Inc. 34, 35 RACOR-T	PEZZO A T TE	TE TEE	T-STÜCK T-STYKKE	9020
34		637-63153		1	O-RING 15,3 ID x 2,2 JUNTA HERMETICA	ANELLO TOROIDALE O-RING	JOINT THORIQUE O-RING	DICHTRING O-RING	055A
35		238-6014		1	O-RING 1/2 ID x 1/16 JUNTA HERMETICA	ANELLO TOROIDALE ANEL O	JOINT TORIQUE O-RING	O-RING O-RING	7176
36		282275A1		1	PIPE CUELLO DE CARGA	TUBO TUBO DE ENCHIMENTO	TUYAU OPVULPIJP	ROHR PAAFYLDNINGSSTUDS	6240
37		700-401		1	TEE 11/16 fc sl x 14 Or, Inc. 38, 39 RACOR-T	PEZZO A T TE	TE TEE	T-STÜCK T-STYKKE	9020
38		637-63113		1	O-RING 11,3 ID x 2,2 JUNTA HERMETICA	ANELLO TOROIDALE O-RING	JOINT THORIQUE O-RING	DICHTRING O-RING	055A
39		238-6012		1	O-RING 3/8 ID x 1/16 JUNTA HERMETICA	ANELLO TOROIDALE ANEL O	JOINT TORIQUE O-RING	O-RING O-RING	7176
40		282278A1		1	PIPE CUELLO DE CARGA	TUBO TUBO DE ENCHIMENTO	TUYAU OPVULPIJP	ROHR PAAFYLDNINGSSTUDS	6240
41		93105C1		1	UNION CONEXION	RACCORDO A GOMITO UNIAO	UNION KOPPELING	VERBAND FORSKRUNING	9560
42		237-6008		1	O-RING 41/64 ID x 3/32 JUNTA HERMETICA	ANELLO TOROIDALE O-RING	JOINT THORIQUE O-RING	DICHTRING O-RING	055A

(a) BSN AJB0355923
(b) ASN AJB0355923

HYDRAULIC SYSTEM - TRANSMISSION LUBE
IMPIANTO IDRAULICO - LUBRIFICAZIONE DELLA TRASMISSIONE
CIRCUIT HYDRAULIQUE - GRAISSAGE DE LA TRANSMISSION
HYDRAULIKANLAGE - GETRIEBESCHMIERUNG

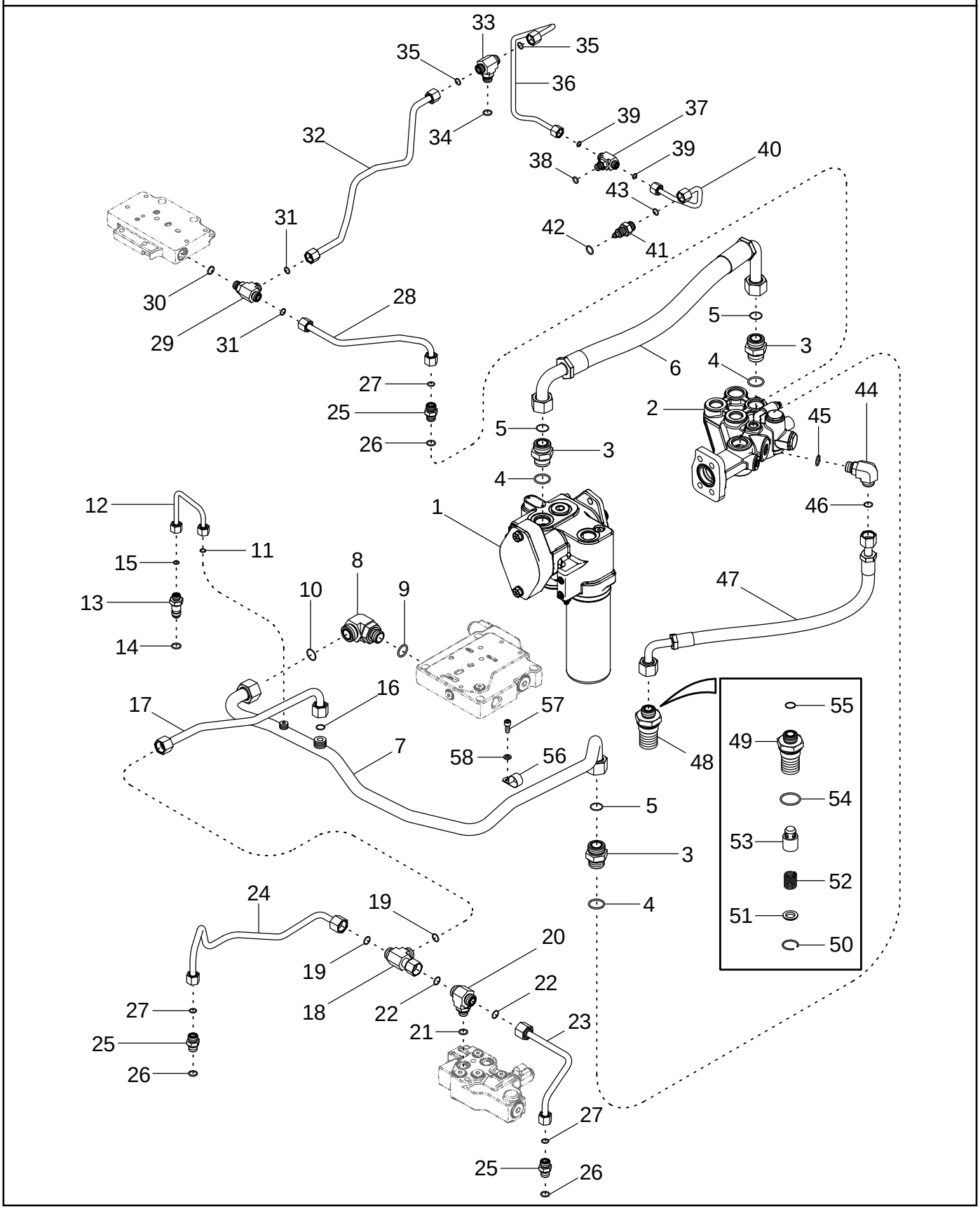

SISTEMA HIDRÁULICO - LUBRICACIÓN DE TRANSMISIÓN
SISTEMA HIDRÁULICO - LUBRIFICAÇÃO DA TRANSMISSÃO
HYDRAULISCH SYSTEEM - SMERING TRANSMISSIE
HYDRAULIKSYSTEM - TRANSMISSIONSSMØRING

R	N	P.N.	MOD	Q	Description Denominacion	Descrizione Denominação	Description Beschrijving	Bezeichnung Beskrivelse	L.C.
43		238-6014		1	O-RING 1/2 ID x 1/16 JUNTA HERMETICA	ANELLO TOROIDALE ANEL O	JOINT TORIQUE O-RING	O-RING O-RING	7176
44		700-306		1	ELBOW 1 fc sl x 22 Or, Inc. 45, 46 CODO	GOMITO JOELHO	COUDE ELLEBOOG	KNIESTÜCK VINKELROER	085G
45		637-63193		1	O-RING 19,3 ID x 2,2 JUNTA HERMETICA	ANELLO TOROIDALE ANEL O	JOINT TORIQUE O-RING	O-RING O-RING	7176
46		238-6016		1	O-RING 5/8 ID x 1/16 JUNTA HERMETICA	ANELLO TOROIDALE ANEL O	JOINT TORIQUE O-RING	O-RING O-RING	7176
47		442847A1		1	HOSE MANGA	MANICOTTO FLESSIBILE TUBO FLEXIVEL	FLEXIBLE FLEXIBELE BUIS	SCHLAUCH SLANGE	030M
48		407616A2		1	VALVE Inc. 48 - 54 VALVULA	VALVOLA VALVULA	SOUPAPE VALVE	VENTIL VALVE	9620
49		407615A2		1	BODY, VALVE CUERPO DE VALVULA	CORPO, VALVOLA CORPO DA VALVULA	CORPS VALVE BODY, VALVE	VENTILKÖRPER BODY, VALVE	P717
50		107452A1		1	CIRCLIP RETENEDOR	ANELLO DI RITEGNO FREIO DE MOLA	CIRCLIP BORGVEER	HALTERING LAASERING	056A
51		107456A1		1	WASHER ARANDELA	ROSETTA PIANA ANILHA	RONDELLE SLUITRING	BEILAGSCHEIBE FLADSKIVE	131R
52		431858A1		1	SPRING RESORTE	MOLLA MOLA	RESSORT VEER	FEDER FJEDER	100M
53		NSS		1	NOT SERVICED SEPARATELY Plunger NO SE REPARA SEPARA	NON FORNITO SEPARAT NOT SERVICED SEPARA	NON FOURNI SEPAREMI NIET ALLEEN VERKRIJG	KEIN ERSATZTEIL NOT SERVICED SEPARA	064N
54		637-64386		1	O-RING 1-1/2 ID x 7/64 JUNTA HERMETICA	ANELLO TOROIDALE ANEL O	JOINT TORIQUE O-RING	O-RING O-RING	7176
55		238-6018		1	O-RING 3/4 ID x 1/16 JUNTA HERMETICA	ANELLO TOROIDALE ANEL O	JOINT TORIQUE O-RING	O-RING O-RING	7176
56		515-22254		1	CLAMP 1 ID COLLAR	MORSETTO BRACADEIRA	COLLIER CLAMP	SCHELLE CLAMP	1640
57		864-8020		1	SCREW M8 x 20; 8.8 TORNILLO	VITE PARAFUSO	VIS SCHROEF	SCHRAUBE SKRUE	040V
58		895-11008		1	WASHER 9 x 16 x 1,6 mm ARANDELA	ROSETTA PIANA ANILHA	RONDELLE SLUITRING	BEILAGSCHEIBE FLADSKIVE	131R

08-09		p1	12/02

HYDRAULIC SYSTEM - HITCH
IMPIANTO IDRAULICO - ATTACCO
CIRCUIT HYDRAULIQUE - ATTELAGE
HYDRAULIKANLAGE - KRAFTHEBER

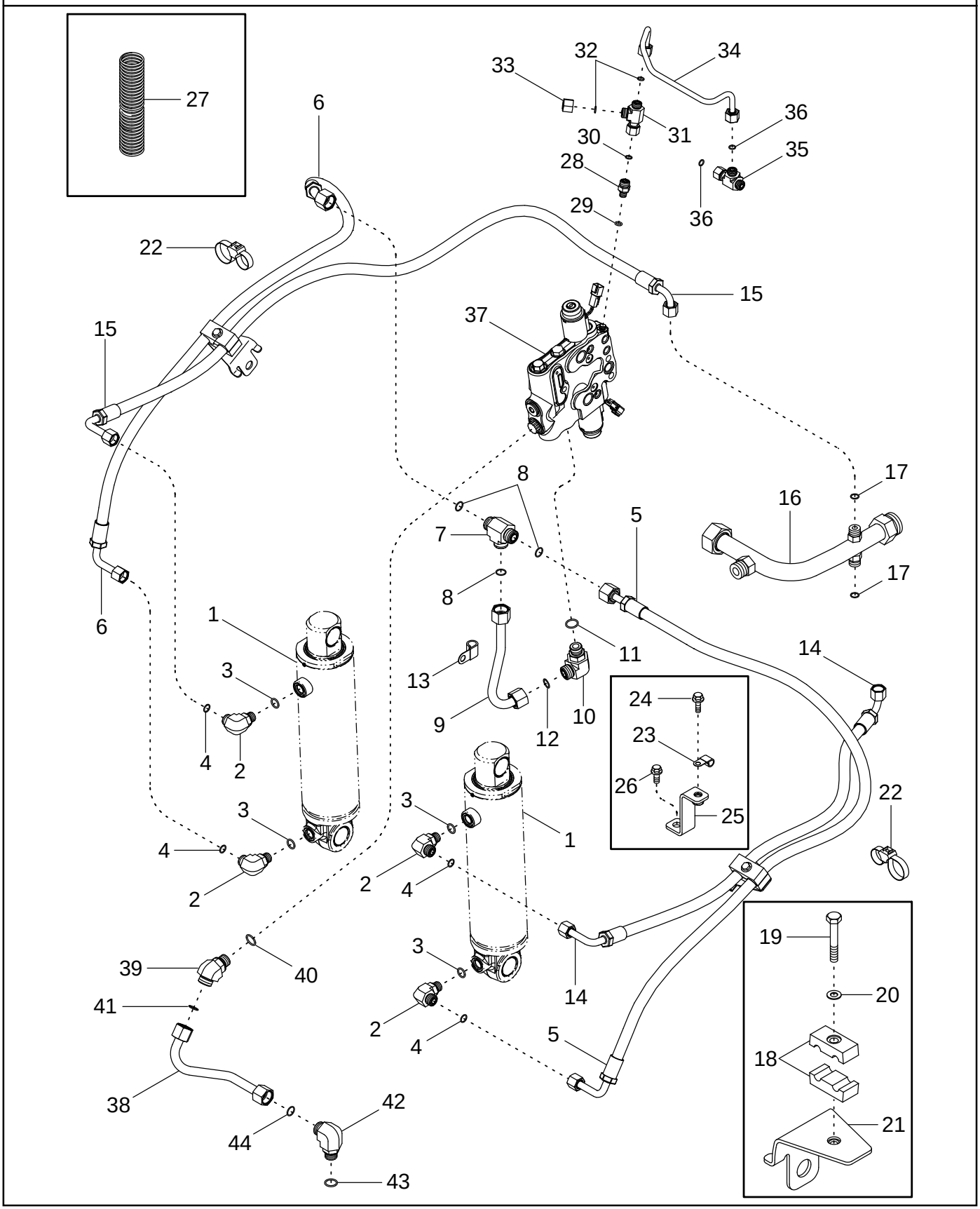

SISTEMA HIDRÁULICO - ENGANCHE
ENGATE DO SISTEMA HIDRÁULICO
HYDRAULISCH SYSTEEM - HEFINRICHTING
HYDRAULIK SYSTEM - TRÆK

R	N	P.N.	MOD	Q	Description Denominacion	Descrizione Denominação	Description Beschrijving	Bezeichnung Beskrivelse	L.C.
1	1	REF		2	INSTRUCTION Cylinder, Hitch				
						ISTRUZIONI	NOTICE	HINWEIS	Z571
					MANUAL	INSTRUCAO	INSTRUCTION	SKO, INDRE	
2		700-305		4	ELBOW 13/16 fc sl x 18 Or, Inc. 3, 4				
						GOMITO	COUDE	KNIESTÜCK	2940
					CODO	JOELHO	ELLEBOOG	VINKELRØR	
3		637-63153		1	O-RING 15,3 ID x 2,2	ANELLO TOROIDALE	JOINT THORIQUE	DICHTRING	055A
					JUNTA HERMETICA	O-RING	O-RING	O-RING	
4		238-6014		1	O-RING 1/2 ID x 1/16	ANELLO TOROIDALE	JOINT TORIQUE	O-RING	7176
					JUNTA HERMETICA	ANEL O	O-RING	O-RING	
5		416432A2		1	HOSE Supply, Right Hand	MANICOTTO FLESSIBILE	FLEXIBLE	SCHLAUCH	030M
					MANGA	TUBO FLEXIVEL	FLEXIBELE BUIS	SLANGE	
6		416433A3		1	HOSE Supply, Left Hand	MANICOTTO FLESSIBILE	FLEXIBLE	SCHLAUCH	030M
					MANGA	TUBO FLEXIVEL	FLEXIBELE BUIS	SLANGE	
7		701-415		1	TEE 1 fc sl, Inc. 8	PEZZO A T	TE	T-STÜCK	9020
					RACOR-T	TE	TEE	T-STYKKE	
8		238-6016		3	O-RING 5/8 ID x 1/16	ANELLO TOROIDALE	JOINT TORIQUE	O-RING	7176
					JUNTA HERMETICA	ANEL O	O-RING	O-RING	
9		436812A1		1	TUBE ASSY.	TUBO, COMPLESSIVO	TUYAUTERIE	ROHRLEITUNG	P465
					TUBO (CONJUNTO)	TUBO CONJUNTO	TUBE ASSY.	TUBE ASSY.	
10		700-306		1	ELBOW 1 fc sl x 22 Or, Inc. 11, 12				
						GOMITO	COUDE	KNIESTÜCK	085G
					CODO	JOELHO	ELLEBOOG	VINKELROER	
11		637-63193		1	O-RING 19,3 ID x 2,2	ANELLO TOROIDALE	JOINT TORIQUE	O-RING	7176
					JUNTA HERMETICA	ANEL O	O-RING	O-RING	
12		238-6016		1	O-RING 5/8 ID x 1/16	ANELLO TOROIDALE	JOINT TORIQUE	O-RING	7176
					JUNTA HERMETICA	ANEL O	O-RING	O-RING	
13		515-25159		1	CLAMP 5/8 ID	MORSETTO	COLLIER	SCHELLE	1640
					COLLAR	BRACADEIRA	CLAMP	CLAMP	
14		450503A1		1	HOSE Return, Right Hand	MANICOTTO FLESSIBILE	FLEXIBLE	SCHLAUCH	030M
					MANGA	TUBO FLEXIVEL	FLEXIBELE BUIS	SLANGE	
15		450506A2		1	HOSE Return, Left Hand	MANICOTTO FLESSIBILE	FLEXIBLE	SCHLAUCH	030M
					MANGA	TUBO FLEXIVEL	FLEXIBELE BUIS	SLANGE	
16		450507A1		1	TUBE ASSY.	TUBO, COMPLESSIVO	TUYAUTERIE	ROHRLEITUNG	P465
					TUBO (CONJUNTO)	TUBO CONJUNTO	TUBE ASSY.	TUBE ASSY.	
17		238-6014		2	O-RING 1/2 ID x 1/16	ANELLO TOROIDALE	JOINT TORIQUE	O-RING	7176
					JUNTA HERMETICA	ANEL O	O-RING	O-RING	
18		329804A1		2	FIXING BRACKET	MONTATURA	BRIDE-DE-FIXATION	BEFESTIGUNGSSCHELL	Z416
					BRIDA DE FIJACION	SUPORTE FIXACAO	FIXING BRACKET	FIXING BRACKET	
19		814-8050		2	SCREW M8 x 50; 8.8	VITE	VIS	SCHRAUBE	P136
					TORNILLO	PARAFUSO	SCHROEF	SKRUE	
20		895-15008		2	WASHER 9 x 20 x 1,6 mm	ROSETTA PIANA	RONDELLE	SCHEIBE	9720
					ARANDELA	ANILHA	SLUITRING	FLADSKIVE	
21		349233A1		2	BRACKET	STAFFA	PATTE FIXATION	HALTERUNG	225S
					PIEZA DE SOPORTE	BRACADEIRA	STEUNBEUGEL	BESLAG	
22		86991000		22	CLAMP	MORSETTO	BRIDE	KLEMME	120M
					BORNE	BORNE	KLEM	SPÆNDEBÅND	

(1) See Figures 08-24, 08-25, 08-26

08-09		p2	12/02

HYDRAULIC SYSTEM - HITCH
IMPIANTO IDRAULICO - ATTACCO
CIRCUIT HYDRAULIQUE - ATTELAGE
HYDRAULIKANLAGE - KRAFTHEBER

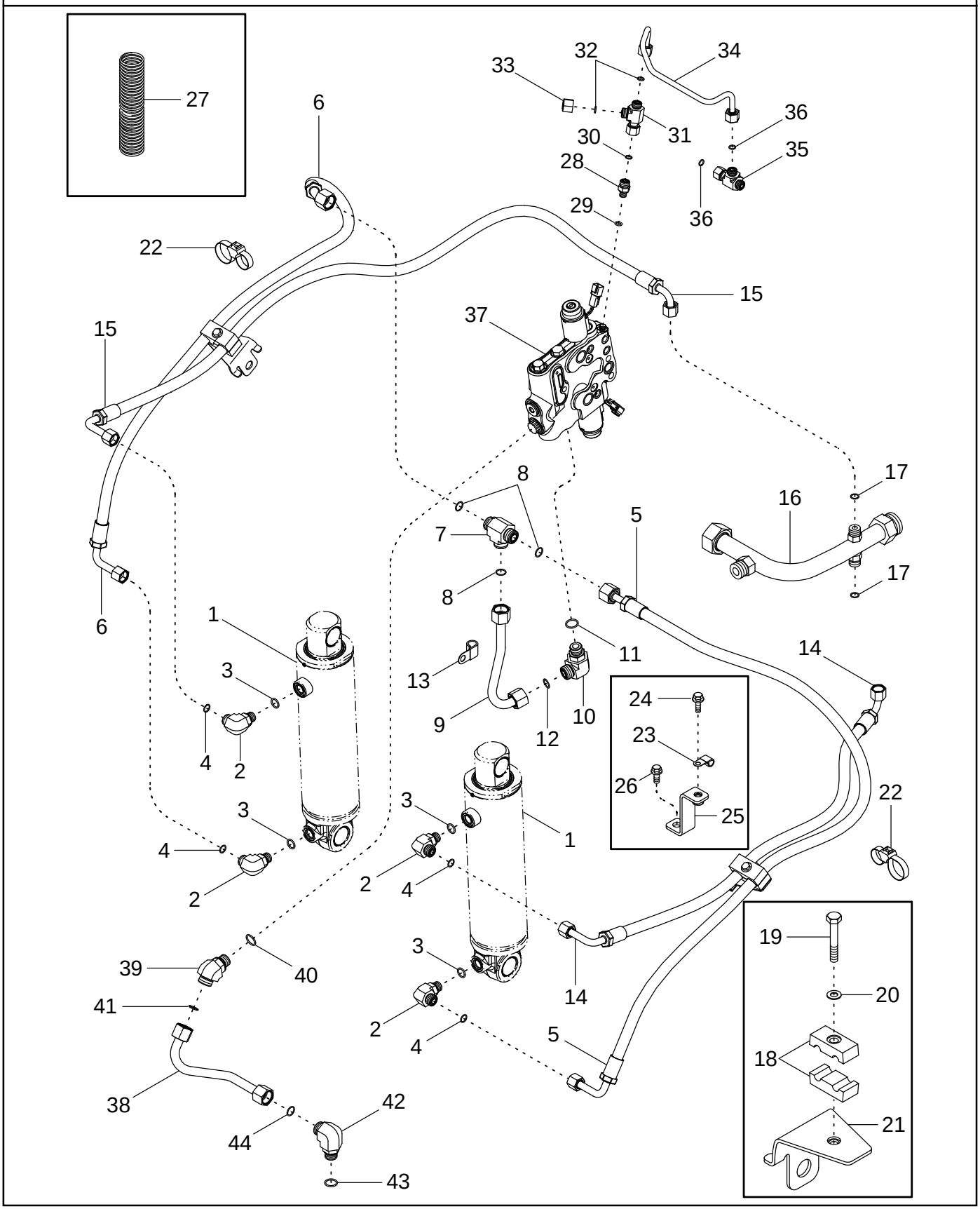

SISTEMA HIDRÁULICO - ENGANCHE
ENGATE DO SISTEMA HIDRÁULICO
HYDRAULISCH SYSTEEM - HEFINRICHTING
HYDRAULIK SYSTEM - TRÆK

R	N	P.N.	MOD	Q	Description Denominacion	Descrizione Denominação	Description Beschrijving	Bezeichnung Beskrivelse	L.C.
23		515-23206		1	CLAMP 13/16 ID COLLAR	MORSETTO BRACADEIRA	COLLIER CLAMP	SCHELLE CLAMP	1640
24		844-8020		1	BOLT M8 x 20; 8.8 TORNILLO	BULLONE PARAFUSO	BOULON BOUT	SCHAUBENBOLZEN SKRUE	140B
25		86985195		1	BRACKET PIEZA DE SOPORTE	STAFFA BRACADEIRA	PATTE FIXATION STEUNBEUGEL	HALTERUNG BESLAG	225S
26		844-10016		1	SCREW M10 x 16; 8.8 TORNILLO	VITE PARAFUSO	VIS SCHROEF	SCHRAUBE SKRUE	7450
27		398610A1		3	CONDUIT TUBERIA	CONDOTTA CONDUITE	CONDUIT CONDUIT	LEITUNG RENDE	1920
28		700-165		1	CONNECTOR, HYD. 11/16 fc sl x 12 Or, Inc. 29, 30 RACOR	RACCORDO IDRAULICO CONECTOR	RACCORD VERBINDING	STUTZEN FORSKRUNING	020R
29		637-63093		1	O-RING 9,3 ID x 2,2 JUNTA HERMETICA	ANELLO TOROIDALE ANEL O	JOINT TORIQUE O-RING	O-RING O-RING	7176
30		238-6012		1	O-RING 3/8 ID x 1/16 JUNTA HERMETICA	ANELLO TOROIDALE ANEL O	JOINT TORIQUE O-RING	O-RING O-RING	7176
31		701-422		1	TEE 11/16 fc sl x 11/16 sw, Inc. 32 RACOR-T	PEZZO A T TE	TE TEE	T-STÜCK T-STYKKE	9020
32		238-6012		2	O-RING 3/8 ID x 1/16 JUNTA HERMETICA	ANELLO TOROIDALE ANEL O	JOINT TORIQUE O-RING	O-RING O-RING	7176
33		701-900		1	PLUG 11/16 TAPÓN	TAPPO BUJAO	BOUCHON PLUG	STOPFEN PROP	6400
34		436163A1		1	TUBE ASSY. TUBO (CONJUNTO)	TUBO, COMPLESSIVO TUBO CONJUNTO	TUYAUTERIE TUBE ASSY.	ROHRLEITUNG TUBE ASSY.	P465
35		701-422		1	TEE 11/16 fc sl x 11/16 sw, Inc. 36 RACOR-T	PEZZO A T TE	TE TEE	T-STÜCK T-STYKKE	9020
36		238-6012		2	O-RING 3/8 ID x 1/16 JUNTA HERMETICA	ANELLO TOROIDALE ANEL O	JOINT TORIQUE O-RING	O-RING O-RING	7176
37	1	412509A2		1	VALVE VALVULA	VALVOLA VALVULA	SOUPAPE VALVE	VENTIL VALVE	9620
38		401336A1		1	TUBE ASSY. TUBO (CONJUNTO)	TUBO, COMPLESSIVO TUBO CONJUNTO	TUYAUTERIE TUBE ASSY.	ROHRLEITUNG TUBE ASSY.	P465
39		700-316		1	ELBOW 1 fc sl x 22 Or, Inc. 40, 41 CODO	GOMITO JOELHO	COUDE ELLEBOOG	KNIESTÜCK VINKELRØR	2940
40		637-63193		1	O-RING 19,3 ID x 2,2 JUNTA HERMETICA	ANELLO TOROIDALE ANEL O	JOINT TORIQUE O-RING	O-RING O-RING	7176
41		238-6016		1	O-RING 5/8 ID x 1/16 JUNTA HERMETICA	ANELLO TOROIDALE ANEL O	JOINT TORIQUE O-RING	O-RING O-RING	7176
42		700-306		1	ELBOW 1 fc sl x 22 Or, Inc. 43, 44 CODO	GOMITO JOELHO	COUDE ELLEBOOG	KNIESTÜCK VINKELROER	085G
43		637-63193		1	O-RING 19,3 ID x 2,2 JUNTA HERMETICA	ANELLO TOROIDALE ANEL O	JOINT TORIQUE O-RING	O-RING O-RING	7176

(1) See Figure 08-21

08-09		p3	12/02

HYDRAULIC SYSTEM - HITCH
IMPIANTO IDRAULICO - ATTACCO
CIRCUIT HYDRAULIQUE - ATTELAGE
HYDRAULIKANLAGE - KRAFTHEBER

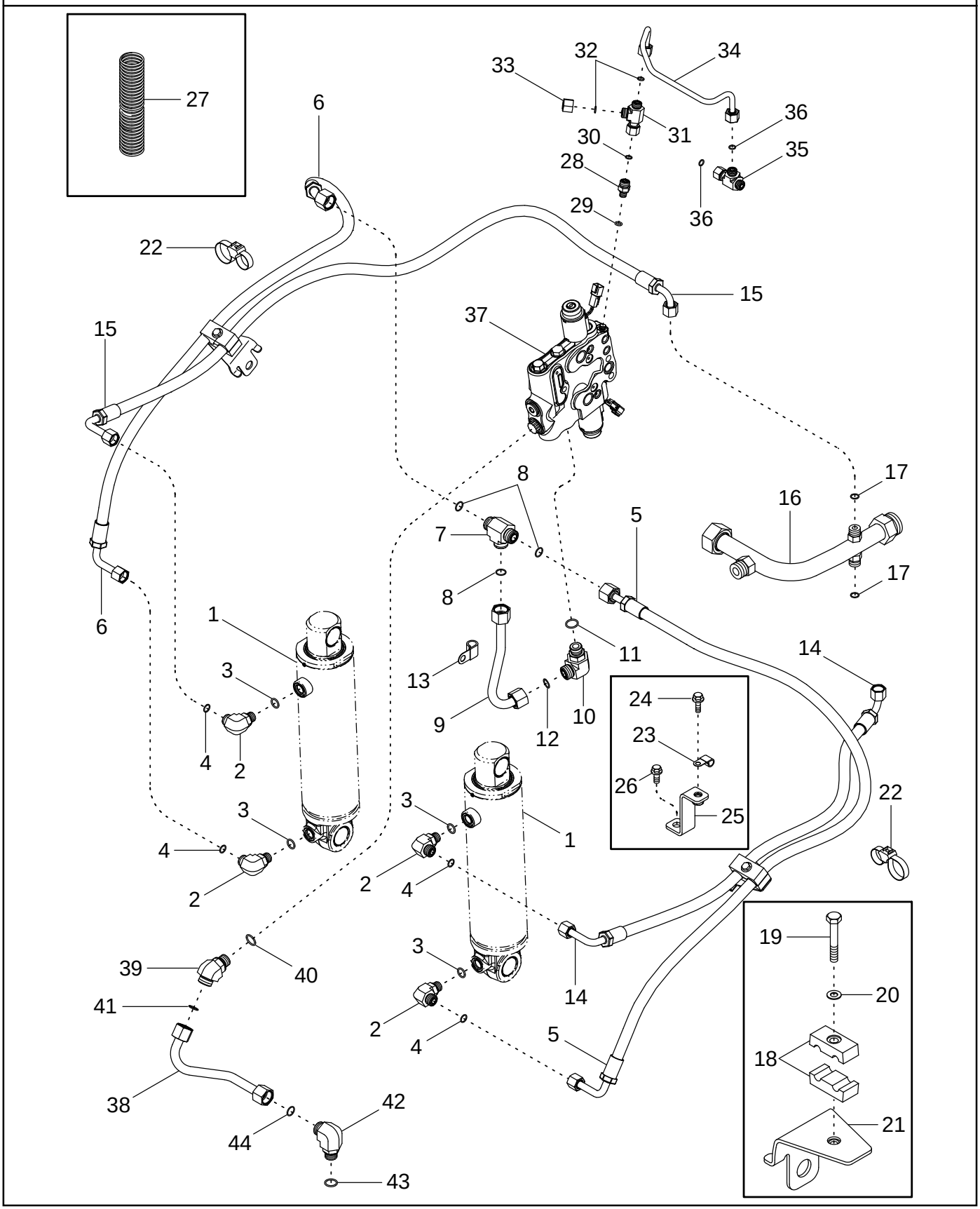

SISTEMA HIDRÁULICO - ENGANCHE
ENGATE DO SISTEMA HIDRÁULICO
HYDRAULISCH SYSTEEM - HEFINRICHTING
HYDRAULIK SYSTEM - TRÆK

R	N	P.N.	MOD	Q	Description Denominacion	Descrizione Denominação	Description Beschrijving	Bezeichnung Beskrivelse	L.C.
44		238-6016		1	O-RING 5/8 ID x 1/16 JUNTA HERMETICA	ANELLO TOROIDALE ANEL O	JOINT TORIQUE O-RING	O-RING O-RING	7176

HYDRAULIC LIFT LINK - HITCH, RIGHT HAND

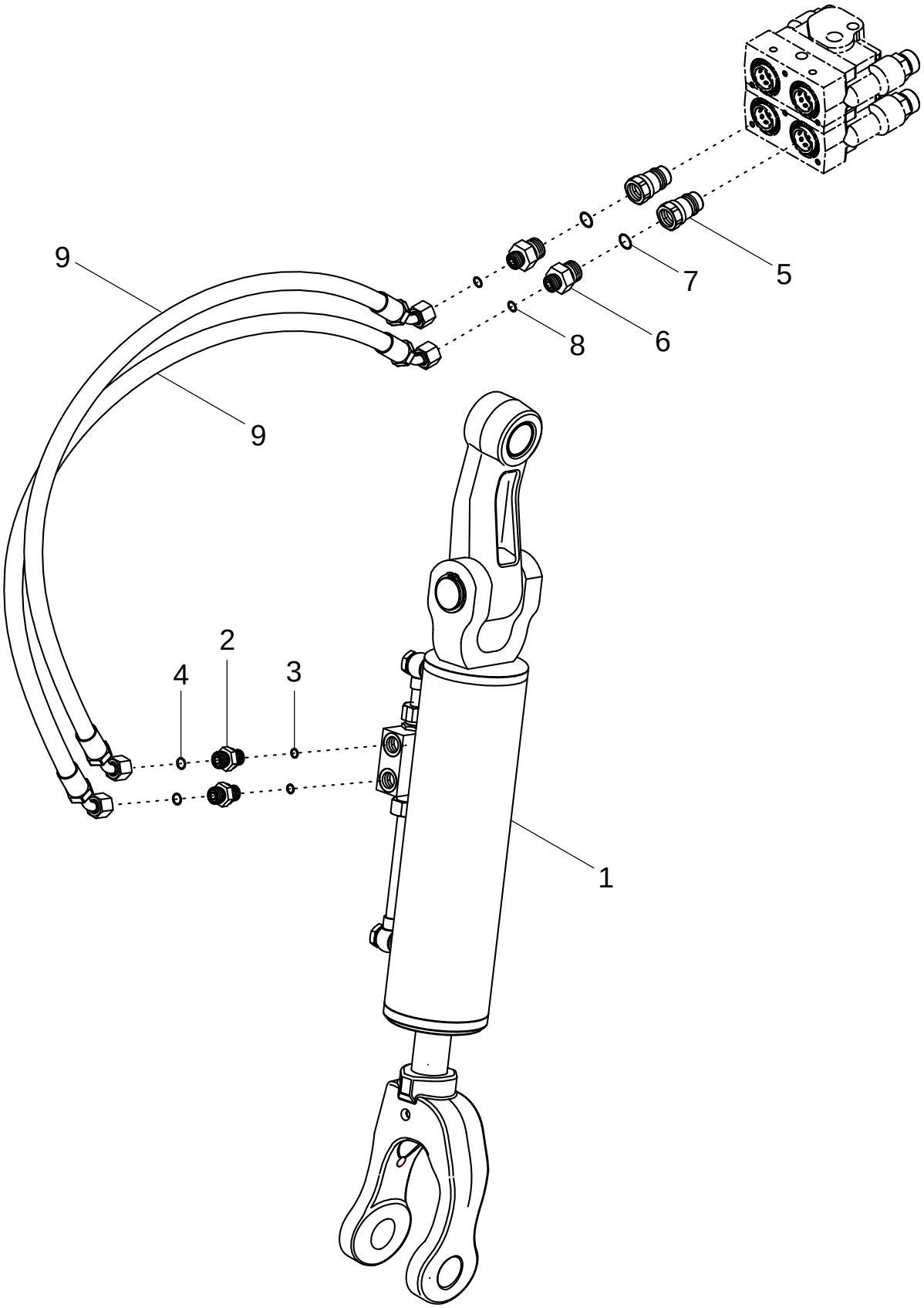

R	N	P.N.	MOD	Q	Description Denominacion	Descrizione Denominação	Description Beschrijving	Bezeichnung Beskrivelse	L.C.
1		{87424887}		1	LINK ASSEMBLY, Hydraulic Lift				
2		700-157		2	UNION Inc. 3, 4 CONEXION	RACCORDO A GOMITO UNIAO	UNION KOPPELING	VERBAND FORSKRUNING	9560
3		637-63133		1	O-RING 13,3 ID x 2,2 JUNTA HERMETICA	ANELLO TOROIDALE ANEL O	JOINT TORIQUE O-RING	O-RING O-RING	7176
4		238-6012		1	O-RING 3/8 ID x 1/16 JUNTA HERMETICA	ANELLO TOROIDALE ANEL O	JOINT TORIQUE O-RING	O-RING O-RING	7176
5		1272399C2		2	COUPLING, BREAK AWAY ACOPLAMIENTO	ATTACCO, CONTROFAS ACOPLAMENTO	ACCOUPLEMENT HYDR. COUPLING, BREAK AWA	ABREISSKUPPLUNG COUPLING, BREAK AWA	2220
6		201-139		2	FITTING Inc. 7, 8 CONEXION	RACCORDO CONEXAO	RACCORD FITTING	ANSCHLUSSSTÜCK FITTING	3300
7		237-6010		1	O-RING JUNTA HERMETICA	ANELLO TOROIDALE ANEL O	JOINT TORIQUE O-RING	O-RING O-RING	7176
8		238-6012		1	O-RING 3/8 ID x 1/16 JUNTA HERMETICA	ANELLO TOROIDALE ANEL O	JOINT TORIQUE O-RING	O-RING O-RING	7176
9		87441257		2	HOSE 805 mm (31-11/16 in) MANGA	MANICOTTO FLESSIBILE TUBO FLEXIVEL	FLEXIBLE FLEXIBELE BUIS	SCHLAUCH SLANGE	030M

08-11		p1	11/04

HYDRAULIC SYSTEM - FRONT HITCH
IMPIANTO IDRAULICO - ATTACCO ANTERIORE
CIRCUIT HYDRAULIQUE - ATTELAGE
HYDRAULIKANLAGE - FRONTKRAFTHEBER

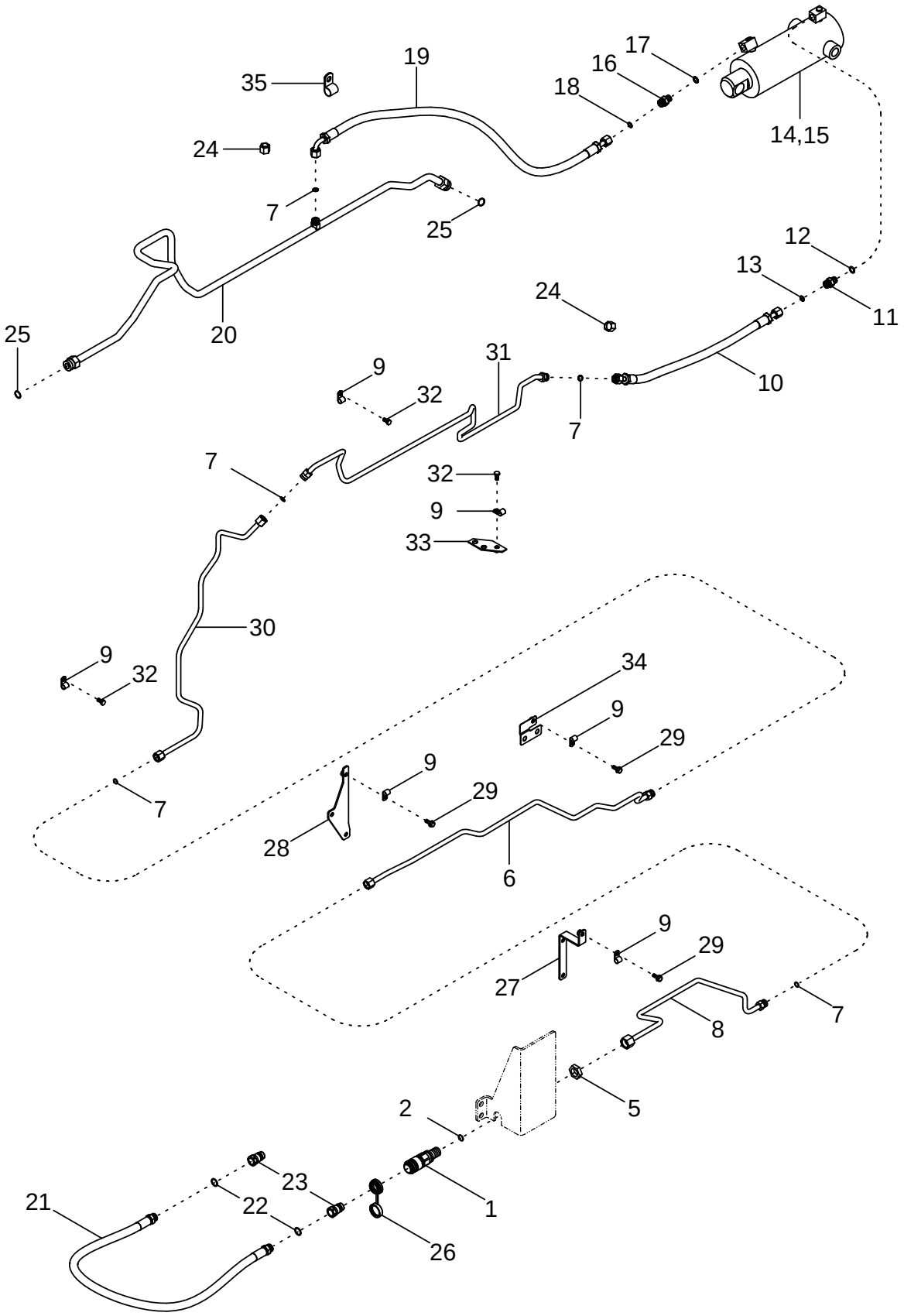

SISTEMA HIDRÁULICO - ENGANCHE DELANTERO
ENGATE DIANTEIRO DO SISTEMA HIDRÁULICO
HYDRAULISCH SYSTEEM - HEFINRICHTING VOOR
HYDRAULIKSYSTEM - FRONTTRÆK

R	N	P.N.	MOD	Q	Description Denominacion	Descrizione Denominação	Description Beschrijving	Bezeichnung Beskrivelse	L.C.
1		257481A2		1	COUPLING, BREAK AWAY Inc. 2				
						ATTACCO, CONTROFAS	ACCOUPLEMENT HYDR.	ABREISSKUPPLUNG	2220
					ACOPLAMIENTO	ACOPLAMENTO	COUPLING, BREAK AWA	COUPLING, BREAK AWA	
2		238-6016		1	O-RING 5/8 ID x 1/16	ANELLO TOROIDALE	JOINT TORIQUE	O-RING	7176
					JUNTA HERMETICA	ANEL O	O-RING	O-RING	
5		701-919		1	NUT 1 in	DADO	ECROU	MUTTER	5780
					TUERCA	PORCA	MOER	MØTRIK	
6		446643A1		1	TUBE ASSY.	TUBO, COMPLESSIVO	TUYAUTERIE	ROHRLEITUNG	P465
					TUBO (CONJUNTO)	TUBO CONJUNTO	TUBE ASSY.	TUBE ASSY.	
7		238-6014		5	O-RING 1/2 ID x 1/16	ANELLO TOROIDALE	JOINT TORIQUE	O-RING	7176
					JUNTA HERMETICA	ANEL O	O-RING	O-RING	
8		86984904		1	TUBE ASSY.	TUBO, COMPLESSIVO	TUYAUTERIE	ROHRLEITUNG	P465
					TUBO (CONJUNTO)	TUBO CONJUNTO	TUBE ASSY.	TUBE ASSY.	
9		515-22127		2	CLAMP 1/2 ID	MORSETTO	COLLIER	SCHELLE	1640
					COLLAR	BRACADEIRA	CLAMP	CLAMP	
10		353711A1		1	HOSE	MANICOTTO FLESSIBILE	FLEXIBLE	SCHLAUCHMUFFE	4480
					MANGA	TUBO FLEXIVEL	FLEXIBELE BUIS	SLANGE	
11		353695A1		1	FITTING 4 mm Orifice, Inc. 12, 13				
						RACCORDO	RACCORD	ANSCHLUSSSTÜCK	3300
					CONEXION	CONEXAO	FITTING	FITTING	
12		637-63153		1	O-RING 15,3 ID x 2,2	ANELLO TOROIDALE	JOINT THORIQUE	DICHTRING	055A
					JUNTA HERMETICA	O-RING	O-RING	O-RING	
13		238-6014		1	O-RING 1/2 ID x 1/16	ANELLO TOROIDALE	JOINT TORIQUE	O-RING	7176
					JUNTA HERMETICA	ANEL O	O-RING	O-RING	
14		348474A1		1	CYLINDER ASSY. Inc. 29	CILINDRO, COMPLESS.	VERIN	ZYLINDER (KPLT.)	P477
					CILINDRO (CONJUNTO)	CILINDRO CONJUNTO	CYLINDER ASSY.	CYLINDER ASSY.	
15		281456A1		1	PACKAGE, SEALS	CONF.,GUARN.TENUTA	POCHETTE-JOINTS	DICHTRINGPACKUNG	P755
					JUEGO JUNTAS	JOGO DE JUNTAS	PACKAGE, SEALS	PACKAGE, SEALS	
16		700-102		1	CONNECTOR, HYD. 13/16 fc sl x 18 Or, Inc. 17, 18				
						RACCORDO IDRAULICO	RACCORD	STUTZEN	020R
					RACOR	CONECTOR	VERBINDING	FORSKRUNING	
17		637-63153		1	O-RING 15,3 ID x 2,2	ANELLO TOROIDALE	JOINT THORIQUE	DICHTRING	055A
					JUNTA HERMETICA	O-RING	O-RING	O-RING	
18		238-6014		1	O-RING 1/2 ID x 1/16	ANELLO TOROIDALE	JOINT TORIQUE	O-RING	7176
					JUNTA HERMETICA	ANEL O	O-RING	O-RING	
19		359879A1		1	HOSE	MANICOTTO FLESSIBILE	FLEXIBLE	SCHLAUCHMUFFE	4480
					MANGA	TUBO FLEXIVEL	FLEXIBELE BUIS	SLANGE	
20		433386A1		1	PIPE	TUBO	TUYAU	ROHR	6240
					CUELLO DE CARGA	TUBO DE ENCHIMENTO	OPVULPIJP	PAAFYLDNINGSSTUDS	
21		359851A1		1	HOSE	MANICOTTO FLESSIBILE	FLEXIBLE	SCHLAUCHMUFFE	4480
					MANGA	TUBO FLEXIVEL	FLEXIBELE BUIS	SLANGE	
22		237-6010		2	O-RING 3/4 ID x 3/32	ANELLO TOROIDALE	JOINT TORIQUE	O-RING	7176
					JUNTA HERMETICA	ANEL O	O-RING	O-RING	
23		1272399C2		2	COUPLING, BREAK AWAY 7/8 NF, Self-Sealing, Male				
						ATTACCO, CONTROFAS	ACCOUPLEMENT HYDR.	ABREISSKUPPLUNG	2220
					ACOPLAMIENTO	ACOPLAMENTO	COUPLING, BREAK AWA	COUPLING, BREAK AWA	
24		701-905		2	PLUG 13/16 NF, If Equippec	TAPPO	BOUCHON	STOPFEN	6400
					TAPÓN	BUJAO	PLUG	PROP	

MX210 MX230
MX255 MX285

08-11		p2	11/04

HYDRAULIC SYSTEM - FRONT HITCH
IMPIANTO IDRAULICO - ATTACCO ANTERIORE
CIRCUIT HYDRAULIQUE - ATTELAGE
HYDRAULIKANLAGE - FRONTKRAFTHEBER

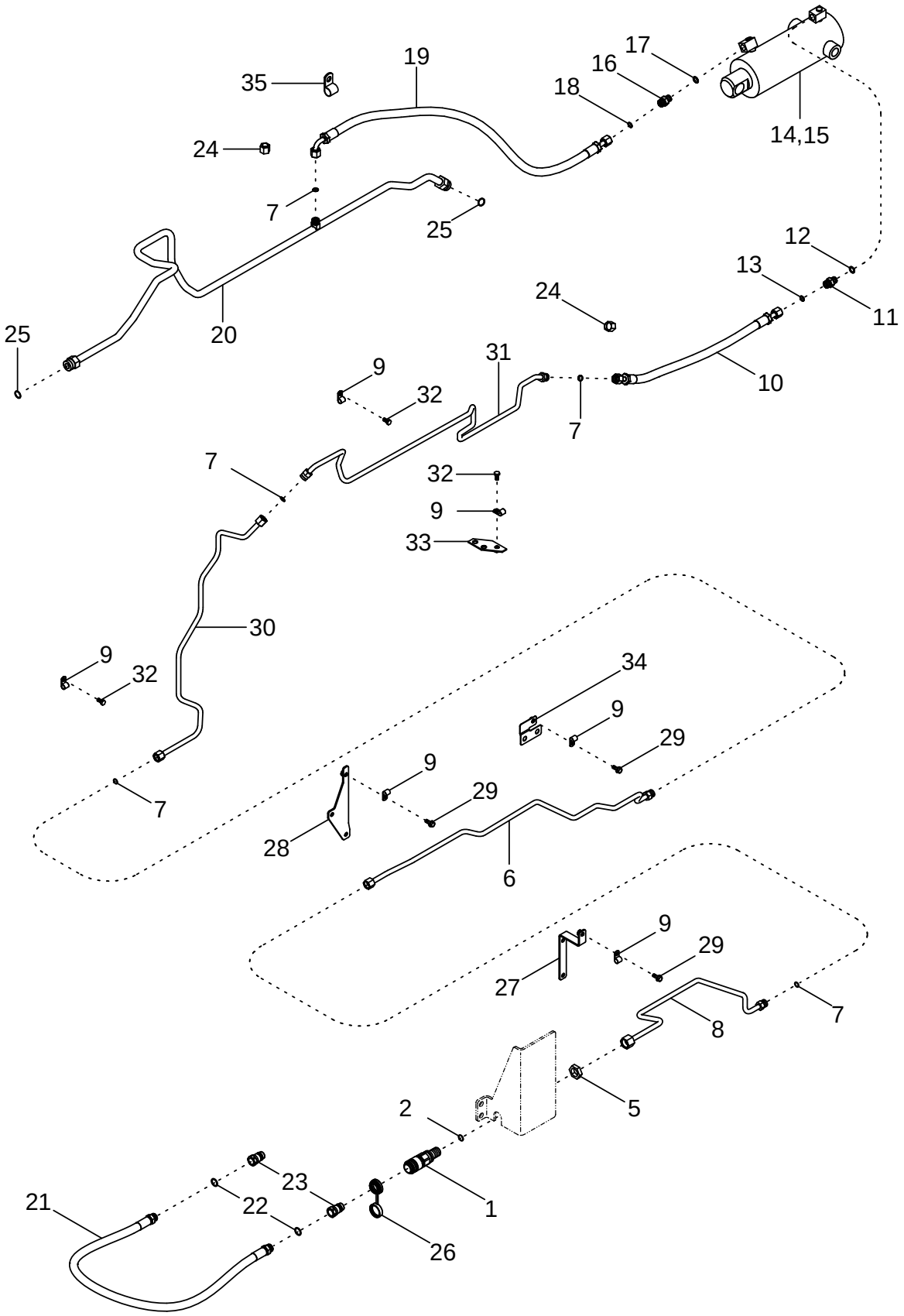

SISTEMA HIDRÁULICO - ENGANCHE DELANTERO
ENGATE DIANTEIRO DO SISTEMA HIDRÁULICO
HYDRAULISCH SYSTEEM - HEFINRICHTING VOOR
HYDRAULIKSYSTEM - FRONTTRÆK

R	N	P.N.	MOD	Q	Description Denominacion	Descrizione Denominação	Description Beschrijving	Bezeichnung Beskrivelse	L.C.
25		238-6018		2	O-RING 3/4 ID x 1/16 JUNTA HERMETICA	ANELLO TOROIDALE ANEL O	JOINT TORIQUE O-RING	O-RING O-RING	7176
26		1954146C1		1	CAP TAPON DEL DEPOSITO	TAPPO SERBATOIO TAMPAO DE RESERVAT	CHAPEAU RESERVOIRDOP	ABDECKAPPE TANKDAEKSEL	1380
27		446773A1		1	BRACKET PIEZA DE SOPORTE	STAFFA BRACADEIRA	PATTE FIXATION STEUNBEUGEL	HALTERUNG BESLAG	225S
28		446775A1		1	BRACKET PIEZA DE SOPORTE	STAFFA BRACADEIRA	PATTE FIXATION STEUNBEUGEL	HALTERUNG BESLAG	225S
29		844-8020		3	BOLT M8 x 20; 8.8 TORNILLO	BULLONE PARAFUSO	BOULON BOUT	SCHAUBENBOLZEN SKRUE	140B
30		384571A1		1	PIPE CUELLO DE CARGA	TUBO TUBO DE ENCHIMENTO	TUYAU OPVULPIJP	ROHR PAAFYLDNINGSSTUDS	6240
31		353703A1		1	PIPE CUELLO DE CARGA	TUBO TUBO DE ENCHIMENTO	TUYAU OPVULPIJP	ROHR PAAFYLDNINGSSTUDS	6240
32		614-8016		2	SCREW M8 x 16; 8.8 TORNILLO	VITE PARAFUSO	VIS SCHROEF	SCHRAUBE SKRUE	P136
33		353693A1		1	SUPPORT APOYADERO	SUPPORTO SUPORTE	SUPPORT SUPPORT	STUETZE SUPPORT	8790
34		362976A1		1	SUPPORT APOYADERO	SUPPORTO SUPORTE	SUPPORT SUPPORT	STUETZE SUPPORT	8790
35		515-23238		1	CLAMP COLLAR	MORSETTO BRACADEIRA	COLLIER CLAMP	SCHELLE CLAMP	1640

HYDRAULIC SYSTEM - PTO/DIFFERENTIAL LOCK VALVE
IMPIANTO IDRAULICO - VALVOLA DI BLOCCAGGIO DEL DIFFERENZIALE E DELLA PTO
CIRCUIT HYDRAULIQUE - VALVE DE BLOCAGE DU DIFFÉRENTIEL/DE LA PDF
HYDRAULIKANLAGE - ZAPFWELLEN-/DIFFERENTIALSPERRENVENTIL

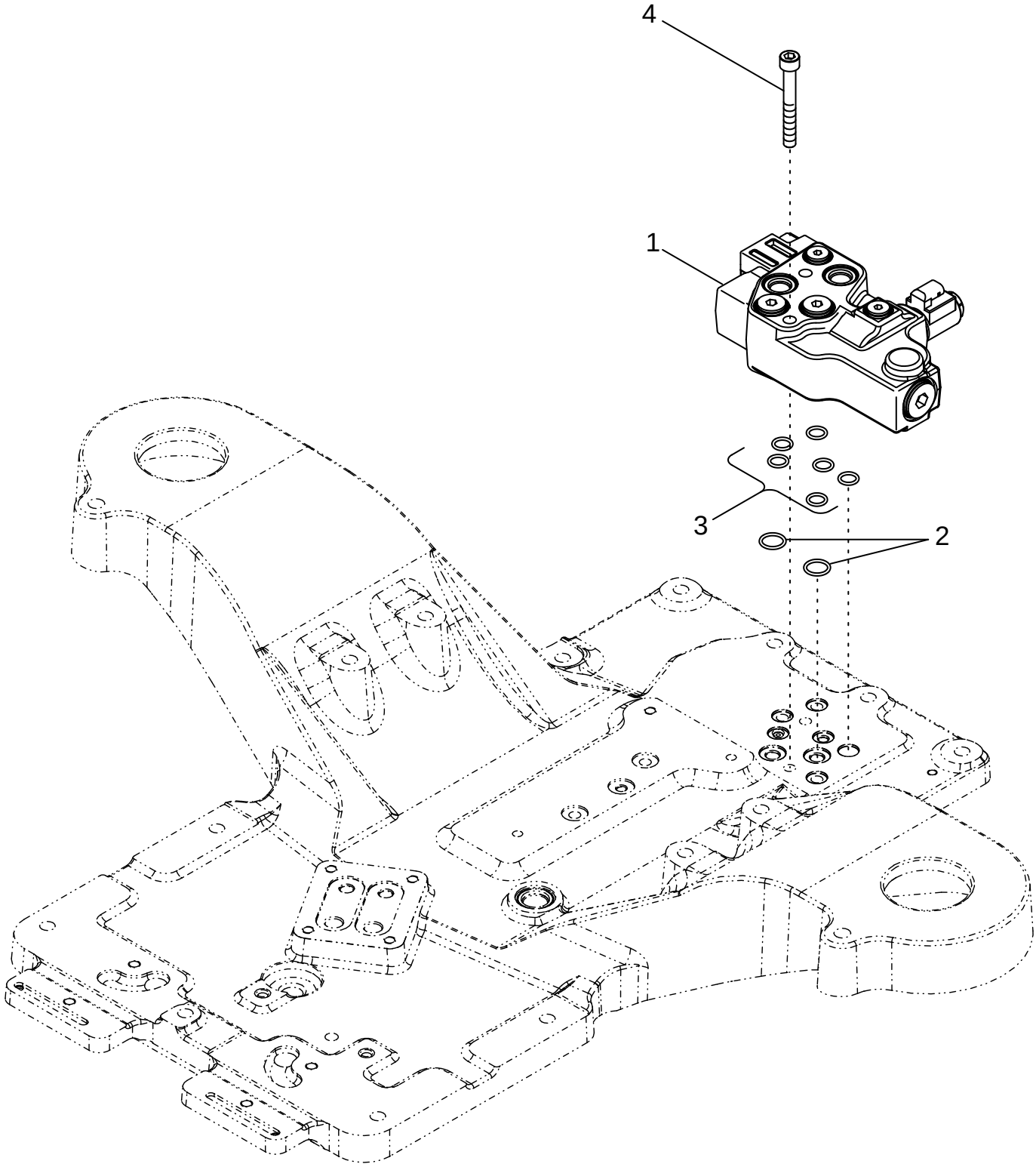

SISTEMA HIDRÁULICO - VÁLVULA DE BLOQUEO DEL DIFERENCIAL/TDF
SISTEMA HIDRÁULICO - VÁLVULA DA TRANCA DO DIFERENCIAL/TDF
HYDRAULISCH SYSTEEM - VERGRENDELKLEP AFTAKAS/DIFFERENTIEEL
HYDRAULIKSYSTEM - PTO/DIFFERENTIALESPÆRREVENTIL

R	N	P.N.	MOD	Q	Description Denominacion	Descrizione Denominação	Description Beschrijving	Bezeichnung Beskrivelse	L.C.
1	1	432906A1		1	VALVE PTO/Differential Lock				
						VALVOLA	SOUPAPE	VENTIL	9620
					VALVULA	VALVULA	VALVE	VALVE	
2		238-5115		2	O-RING 11/16 ID x 3/32	ANELLO TOROIDALE	JOINT TORIQUE	O-RING	7176
					JUNTA HERMETICA	ANEL O	O-RING	O-RING	
3		238-5112		6	O-RING 1/2 ID x 3/32	ANELLO TOROIDALE	JOINT TORIQUE	O-RING	7176
					JUNTA HERMETICA	ANEL O	O-RING	O-RING	
4		864-10080		2	SCREW M10 x 80; 8.8	VITE	VIS	SCHRAUBE	7450
					TORNILLO	PARAFUSO	SCHROEF	SKRUE	

(1) See Figure 08-17

08-13		p1	11/04

HYDRAULIC SYSTEM - REMOTE COUPLERS
IMPIANTO IDRAULICO - GIUNTI DI ACCOPPIAMENTO AUSILIARI
CIRCUIT HYDRAULIQUE - COUPLEURS À DISTANCE
HYDRAULIKANLAGE - ZUSATZSTEUERGERÄTE-KUPPLUNGEN

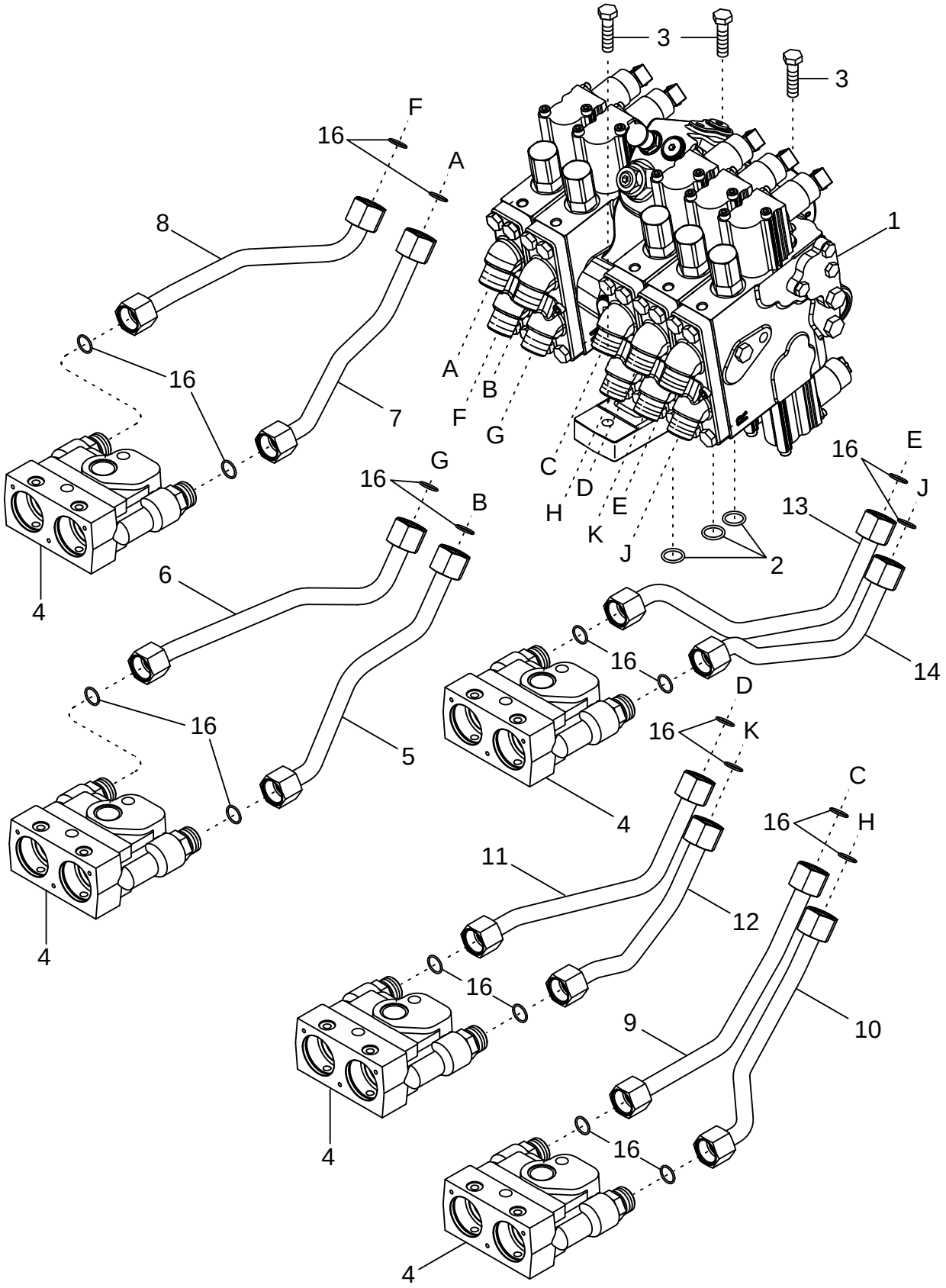

SISTEMA HIDRÁULICO - ACOPLADORES REMOTOS
ACOPLADORES REMOTOS DO SISTEMA HIDRÁULICO
HYDRAULISCH SYSTEEM - EXTERNE KOPPELSTUKKEN
HYDRAULIKSYSTEM - FJERNKOBLINGSANORDNINGER

R	N	P.N.	MOD	Q	Description Denominacion	Descrizione Denominação	Description Beschrijving	Bezeichnung Beskrivelse	L.C.
1	1	REF		1	INSTRUCTION Valve Assy, Control				
						ISTRUZIONI	NOTICE	HINWEIS	Z571
					MANUAL	INSTRUCAO	INSTRUCTION	SKO, INDRE	
2		238-5115		3	O-RING 11/16 ID x 3/32	ANELLO TOROIDALE	JOINT TORIQUE	O-RING	7176
					JUNTA HERMETICA	ANEL O	O-RING	O-RING	
3		614-10040		3	SCREW M10 x 40; 8,8	VITE	VIS	SCHRAUBE	P136
					TORNILLO	PARAFUSO	SCHROEF	SKRUE	
4	2	REF		AR	INSTRUCTION Coupler, Hydraulic				
						ISTRUZIONI	NOTICE	HINWEIS	Z571
					MANUAL	INSTRUCAO	INSTRUCTION	SKO, INDRE	
5		436814A1		1	TUBE ASSY. 1st Raise	TUBO, COMPLESSIVO	TUYAUTERIE	ROHRLEITUNG	P465
					TUBO (CONJUNTO)	TUBO CONJUNTO	TUBE ASSY.	TUBE ASSY.	
6		436813A1		1	TUBE ASSY. 1st Drop	TUBO, COMPLESSIVO	TUYAUTERIE	ROHRLEITUNG	P465
					TUBO (CONJUNTO)	TUBO CONJUNTO	TUBE ASSY.	TUBE ASSY.	
7		436815A1		1	TUBE ASSY. 2nd Raise	TUBO, COMPLESSIVO	TUYAUTERIE	ROHRLEITUNG	P465
					TUBO (CONJUNTO)	TUBO CONJUNTO	TUBE ASSY.	TUBE ASSY.	
8		436811A1		1	TUBE ASSY. 2nd Drop	TUBO, COMPLESSIVO	TUYAUTERIE	ROHRLEITUNG	P465
					TUBO (CONJUNTO)	TUBO CONJUNTO	TUBE ASSY.	TUBE ASSY.	
9		426757A1		1	TUBE ASSY. 3rd Raise	TUBO, COMPLESSIVO	TUYAUTERIE	ROHRLEITUNG	P465
					TUBO (CONJUNTO)	TUBO CONJUNTO	TUBE ASSY.	TUBE ASSY.	
10		426756A1		1	TUBE ASSY. 3rd Drop	TUBO, COMPLESSIVO	TUYAUTERIE	ROHRLEITUNG	P465
					TUBO (CONJUNTO)	TUBO CONJUNTO	TUBE ASSY.	TUBE ASSY.	
11		412082A1		1	TUBE ASSY. 4th Raise	TUBO, COMPLESSIVO	TUYAUTERIE	ROHRLEITUNG	P465
					TUBO (CONJUNTO)	TUBO CONJUNTO	TUBE ASSY.	TUBE ASSY.	
12		450500A1		1	TUBE ASSY. 4th Drop	TUBO, COMPLESSIVO	TUYAUTERIE	ROHRLEITUNG	P465
					TUBO (CONJUNTO)	TUBO CONJUNTO	TUBE ASSY.	TUBE ASSY.	
13		412084A1		1	TUBE ASSY. 5th Raise	TUBO, COMPLESSIVO	TUYAUTERIE	ROHRLEITUNG	P465
					TUBO (CONJUNTO)	TUBO CONJUNTO	TUBE ASSY.	TUBE ASSY.	
14		450501A1		1	TUBE ASSY. 5th Drop	TUBO, COMPLESSIVO	TUYAUTERIE	ROHRLEITUNG	P465
					TUBO (CONJUNTO)	TUBO CONJUNTO	TUBE ASSY.	TUBE ASSY.	
16		238-6016		AR	O-RING 5/8 ID x 1/16	ANELLO TOROIDALE	JOINT TORIQUE	O-RING	7176
					JUNTA HERMETICA	ANEL O	O-RING	O-RING	

(1) See Figure 08-18
(2) See Figure 08-22

HYDRAULIC SYSTEM - POWER BEYOND
IMPIANTO IDRAULICO - POWER BEYOND
CIRCUIT HYDRAULIQUE - PUISSANCE DE RÉSERVE
HYDRAULIKANLAGE - EXTERNE VERBRAUCHER

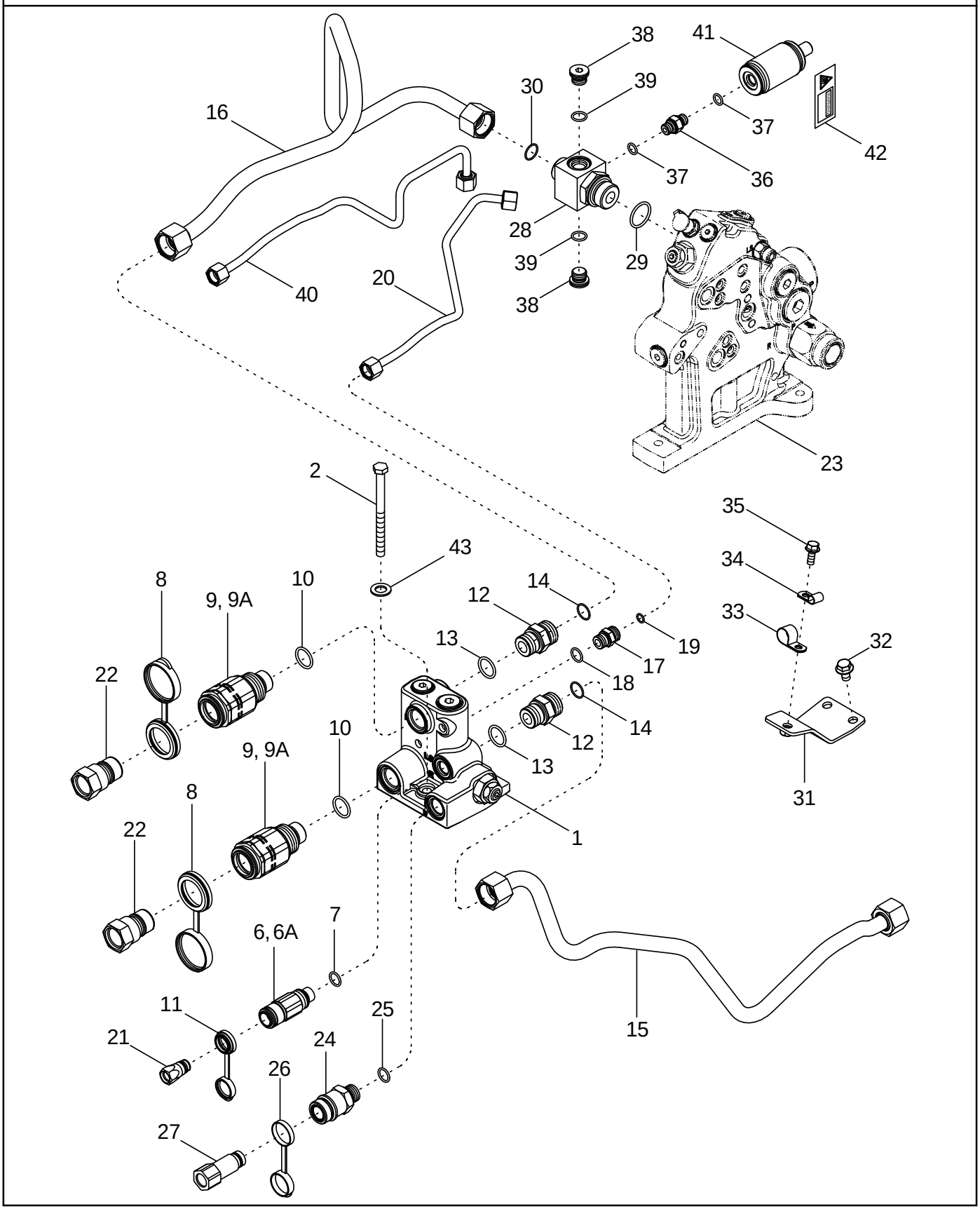

SISTEMA HIDRÁULICO - ALIMENTACION AUXILIAR
POTÊNCIA AUXILIAR DO SISTEMA HIDRÁULICO
HYDRAULISCH SYSTEEM - AFTAKASVERMOGEN
HYDRAULIKSYSTEM - KRAFTOMLØB

R	N	P.N.	MOD	Q	Description Denominacion	Descrizione Denominação	Description Beschrijving	Bezeichnung Beskrivelse	L.C.
1	1	86989384	a	1	VALVE, HYDRAULIC VALVULA HIDRAULICA	VALVOLA IDRAULICA VALVULA HIDRAULICA	SOUPAPE HYDRAULIQU KLEP, HYDRAULISCH	VENTIL, HYDRAULISCH VENTIL HYDRAULIK	010V
1	1	87442165	b	1	VALVE, HYDRAULIC VALVULA HIDRAULICA	VALVOLA IDRAULICA VALVULA HIDRAULICA	SOUPAPE HYDRAULIQU KLEP, HYDRAULISCH	VENTIL, HYDRAULISCH VENTIL HYDRAULIK	010V
2		814-10150		2	SCREW M10 x 150 TORNILLO	VITE PARAFUSO	VIS SCHROEF	SCHRAUBE SKRUE	7450
6		294603A1		1	BODY 1/4 in, In. 7 CUERPO	CORPO CORPO	CORPS LICHAAM	KÖRPER HUS	300C
6A		445014A1		1	KIT, SEALS SERIE DE JUNTAS	SERIE GUARNIZIONI CONJUNTO DE JUNTAS	POCHETTE DE JOINTS DICHTINGSKIT	DICHTUNGSSATZ PAKNINGSSAET	630S
7		637-63153		1	O-RING 15,3 ID x 2,2 JUNTA HERMETICA	ANELLO TOROIDALE O-RING	JOINT THORIQUE O-RING	DICHTRING O-RING	055A
8		334216A1		2	CAP TAPON DEL DEPOSITO	TAPPO SERBATOIO TAMPAO DE RESERVAT	CHAPEAU RESERVOIRDOP	KAPPE TANKDAEKSEL	052T
9		298291A1		2	BODY 3/4 in, Inc.10 CUERPO	CORPO CORPO	CORPS LICHAAM	KÖRPER HUS	300C
9A		445015A1		1	KIT, SEALS SERIE DE JUNTAS	SERIE GUARNIZIONI CONJUNTO DE JUNTAS	POCHETTE DE JOINTS DICHTINGSKIT	DICHTUNGSSATZ PAKNINGSSAET	630S
10		637-64236		1	O-RING 23,6 ID x 2,9 JUNTA HERMETICA	ANELLO TOROIDALE ANEL O	JOINT TORIQUE O-RING	O-RING O-RING	7176
11		334218A1		1	CAP TAPON DEL DEPOSITO	TAPPO SERBATOIO TAMPAO DE RESERVAT	CHAPEAU RESERVOIRDOP	KAPPE TANKDAEKSEL	052T
12		700-104		4	FITTING 1-3/16 fc sl x 27 Or, Inc. 13, 14 CONEXION	RACCORDO CONEXAO	RACCORD FITTING	ANSCHLUSSSTÜCK FITTING	3300
13		637-64236		1	O-RING 23,6 ID x 2,9 JUNTA HERMETICA	ANELLO TOROIDALE ANEL O	JOINT TORIQUE O-RING	O-RING O-RING	7176
14		238-6018		1	O-RING 3/4 ID x 1/16 JUNTA HERMETICA	ANELLO TOROIDALE ANEL O	JOINT TORIQUE O-RING	O-RING O-RING	7176
15		87401138		1	TUBE ASSY. Return TUBO (CONJUNTO)	TUBO, COMPLESSIVO TUBO CONJUNTO	TUYAUTERIE TUBE ASSY.	ROHRLEITUNG TUBE ASSY.	P465
16		87401136		1	TUBE ASSY. Supply TUBO (CONJUNTO)	TUBO, COMPLESSIVO TUBO CONJUNTO	TUYAUTERIE TUBE ASSY.	ROHRLEITUNG TUBE ASSY.	P465
17		700-106		1	CONNECTOR, HYD. 11/16 fc sl x 18 Or, Inc. 18, 19 RACOR	RACCORDO IDRAULICO CONECTOR	RACCORD VERBINDING	STUTZEN FORSKRUNING	020R
18		637-63153		1	O-RING 15,3 ID x 2,2 JUNTA HERMETICA	ANELLO TOROIDALE O-RING	JOINT THORIQUE O-RING	DICHTRING O-RING	055A
19		238-6012		1	O-RING 3/8 ID x 1/16 JUNTA HERMETICA	ANELLO TOROIDALE ANEL O	JOINT TORIQUE O-RING	O-RING O-RING	7176
20	2	87401137		1	TUBE Load Sense TUBO	TUBETTO TUBO	TUBE BUISJE	SCHLAUCH RØR	195T
21		347756A1		1	COUPLING 1/4 in ELEMENTO DE ACOPLAI	TESTA A CAMPANA ELEMENTO DE ACOPLAI	CHAPE KOPPELING	GLOCKENKOPF KOBLING	109T

(1) See Figure 08-27
(2) With Hitch
(a) BSN AJB0304849
(b) ASN AJB0304849

HYDRAULIC SYSTEM - POWER BEYOND
IMPIANTO IDRAULICO - POWER BEYOND
CIRCUIT HYDRAULIQUE - PUISSANCE DE RÉSERVE
HYDRAULIKANLAGE - EXTERNE VERBRAUCHER

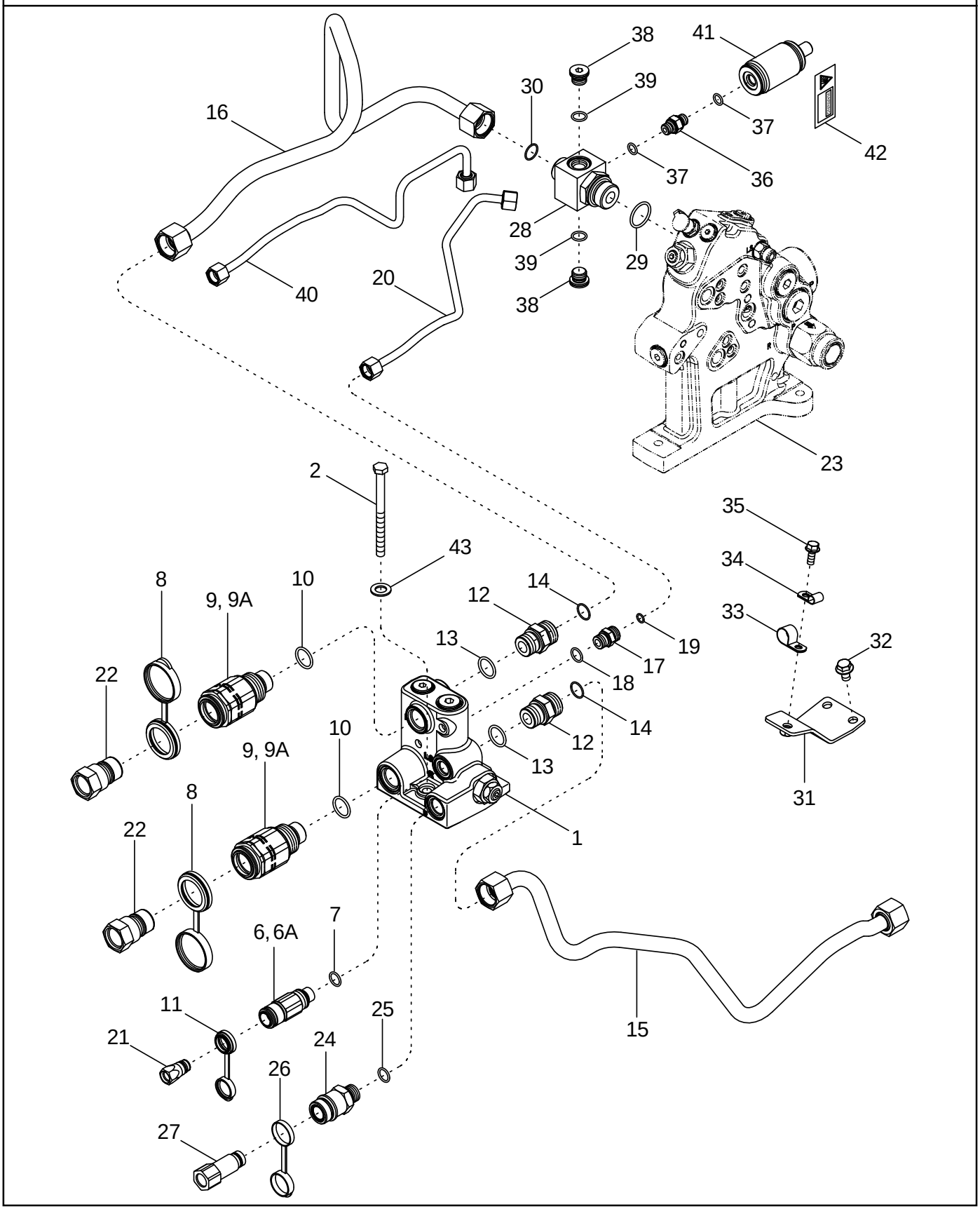

SISTEMA HIDRÁULICO - ALIMENTACION AUXILIAR
POTÊNCIA AUXILIAR DO SISTEMA HIDRÁULICO
HYDRAULISCH SYSTEEM - AFTAKASVERMOGEN
HYDRAULIKSYSTEM - KRAFTOMLØB

R	N	P.N.	MOD	Q	Description Denominacion	Descrizione Denominação	Description Beschrijving	Bezeichnung Beskrivelse	L.C.
22		347755A1		1	COUPLING 3/4 in ELEMENTO DE ACOPLAI	TESTA A CAMPANA ELEMENTO DE ACOPLAI	CHAPE KOPPELING	GLOCKENKOPF KOBLING	109T
23	1	REF		1	INSTRUCTION Manifold MANUAL	ISTRUZIONI INSTRUCAO	NOTICE INSTRUCTION	HINWEIS SKO, INDRE	Z571
24		380739A1		1	COUPLING, BREAK AWAY 3/8, Inc. 25 ACOPLAMIENTO	ATTACCO, CONTROFAS ACOPLAMENTO	ACCOUPLEMENT HYDR. COUPLING, BREAK AWA	ABREISSKUPPLUNG COUPLING, BREAK AWA	2220
25		637-63153		1	O-RING 15,3 ID x 2,2 JUNTA HERMETICA	ANELLO TOROIDALE O-RING	JOINT THORIQUE O-RING	DICHTRING O-RING	055A
26		380740A1		1	CAP TAPON DEL DEPOSITO	TAPPO SERBATOIO TAMPAO DE RESERVAT	CHAPEAU RESERVOIRDOP	KAPPE TANKDAEKSEL	052T
27		385358A1		1	COUPLING 3/8 ELEMENTO DE ACOPLAI	TESTA A CAMPANA ELEMENTO DE ACOPLAI	CHAPE KOPPELING	GLOCKENKOPF KOBLING	109T
28		87402551		1	TEE 1-3/16 fc sl x 18 Or x 33 Or, Inc. 29, 30 RACOR-T	PEZZO A T TE	TE TEE	T-STÜCK T-STYKKE	9020
29		637-64296		1	O-RING 29,6 ID x 2,9 JUNTA HERMETICA	ANELLO TOROIDALE ANEL O	JOINT TORIQUE O-RING	O-RING O-RING	7176
30		238-6018		1	O-RING 3/4 ID x 1/16 JUNTA HERMETICA	ANELLO TOROIDALE ANEL O	JOINT TORIQUE O-RING	O-RING O-RING	7176
31		87402632		1	BRACKET PIEZA DE SOPORTE	STAFFA BRACADEIRA	PATTE FIXATION STEUNBEUGEL	HALTERUNG BESLAG	225S
32		844-10016		2	SCREW M10 x 16; 8.8 TORNILLO	VITE PARAFUSO	VIS SCHROEF	SCHRAUBE SKRUE	7450
33		515-22190		1	CLAMP 3/4 ID COLLAR	MORSETTO BRACADEIRA	COLLIER CLAMP	SCHELLE CLAMP	1640
34		515-2295		1	CLAMP 3/8 ID COLLAR	MORSETTO BRACADEIRA	COLLIER CLAMP	SCHELLE CLAMP	1640
35		844-8020		1	BOLT M8 x 20; 8.8 TORNILLO	BULLONE PARAFUSO	BOULON BOUT	SCHAUBENBOLZEN SKRUE	140B
36		87403003		1	CONNECTOR, HYD. 12 Or, inc. 37 RACOR	RACCORDO IDRAULICO CONECTOR	RACCORD VERBINDING	STUTZEN FORSKRUNING	020R
37		637-63113		2	O-RING 11,3 ID x 2,2 JUNTA HERMETICA	ANELLO TOROIDALE O-RING	JOINT THORIQUE O-RING	DICHTRING O-RING	055A
38		221578A1		2	PLUG Inc. 39 TAPÓN	TAPPO BUJÃO	BOUCHON PLUG	STOPFEN PROP	050T
39		637-63113		1	O-RING 11,3 ID x 2,2 JUNTA HERMETICA	ANELLO TOROIDALE O-RING	JOINT THORIQUE O-RING	DICHTRING O-RING	055A
40	2	87404587		1	TUBE Load Sense TUBO	TUBETTO TUBO	TUBE BUISJE	SCHLAUCH RØR	195T
41		87402747		1	ACCUMULATOR ACUMULADOR	ACCUMULATORE ACUMULADOR	ACCUMULATEUR ACCUMULATOR	DRUCKBEHÄLTER AKKUMULATOR	037A
42		82029752		1	PLAQUE, DATA PLACA INDICADORA	TARGHETTA PLACA IDENTIFICADORA	PLAQUE MINERALOGIQU IDENTIFIKATIEPLAATJE	TYPENSHILD SKILT	065T

(1) See Figure 08-19
(2) Without Hitch

HYDRAULIC SYSTEM - MOTOR RETURN
IMPIANTO IDRAULICO - RITORNO DEL MOTORE
CIRCUIT HYDRAULIQUE - RETOUR DU MOTEUR
HYDRAULIKANLAGE - MOTOR-RÜCKLAUF

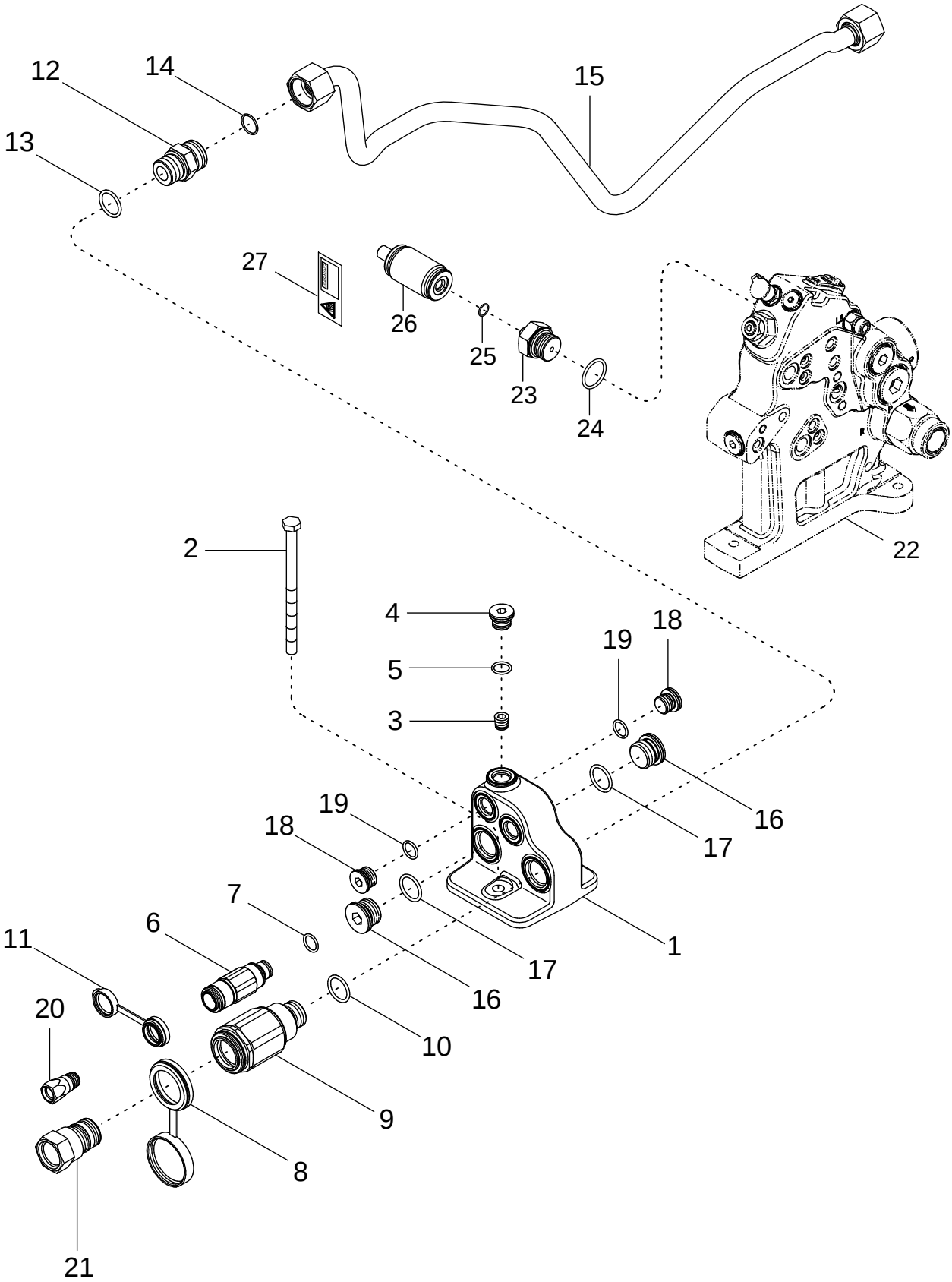

SISTEMA HIDRÁULICO - RETORNO DEL MOTOR
RETORNO DO MOTOR DO SISTEMA HIDRÁULICO
HYDRAULISCH SYSTEEM - MOTORRETOUR
HYDRAULIKSYSTEM - MOTOR RETUR

R	N	P.N.	MOD	Q	Description Denominacion	Descrizione Denominação	Description Beschrijving	Bezeichnung Beskrivelse	L.C.
1		387929A1		1	VALVE VALVULA	VALVOLA VALVULA	SOUPAPE VALVE	VENTIL VALVE	9620
2		814-10150		2	SCREW M10 x 150 TORNILLO	VITE PARAFUSO	VIS SCHROEF	SCHRAUBE SKRUE	7450
3		217-432		1	PLUG 1/4 PT TAPÓN	TAPPO BUJÃO	BOUCHON PLUG	STOPFEN PROP	050T
4		221578A1		1	PLUG M18 - 1,5, Inc. 5 TAPÓN	TAPPO BUJÃO	BOUCHON PLUG	STOPFEN PROP	050T
5		637-63153		1	O-RING 15,3 ID x 2,2 JUNTA HERMETICA	ANELLO TOROIDALE O-RING	JOINT THORIQUE O-RING	DICHTRING O-RING	055A
6		380739A1		1	COUPLING, BREAK AWAY 3/8, Inc. 7 ACOPLAMIENTO	ATTACCO, CONTROFAS ACOPLAMENTO	ACCOUPLEMENT HYDR. COUPLING, BREAK AWA	ABREISSKUPPLUNG COUPLING, BREAK AWA	2220
7		637-63193		1	O-RING 19,3 ID x 2,2 JUNTA HERMETICA	ANELLO TOROIDALE ANEL O	JOINT TORIQUE O-RING	O-RING O-RING	7176
8		334216A1		1	CAP TAPON DEL DEPOSITO	TAPPO SERBATOIO TAMPAO DE RESERVAT	CHAPEAU RESERVOIRDOP	KAPPE TANKDAEKSEL	052T
9		298291A1		1	BODY 3/4 in, Inc. 10 CUERPO	CORPO CORPO	CORPS LICHAAM	KÖRPER HUS	300C
9A		445015A1		1	KIT, SEALS SERIE DE JUNTAS	SERIE GUARNIZIONI CONJUNTO DE JUNTAS	POCHETTE DE JOINTS DICHTINGSKIT	DICHTUNGSSATZ PAKNINGSSAET	630S
10		637-64236		1	O-RING 23,6 ID x 2,9 JUNTA HERMETICA	ANELLO TOROIDALE ANEL O	JOINT TORIQUE O-RING	O-RING O-RING	7176
11		380740A1		1	CAP TAPON DEL DEPOSITO	TAPPO SERBATOIO TAMPAO DE RESERVAT	CHAPEAU RESERVOIRDOP	KAPPE TANKDAEKSEL	052T
12		700-104		1	FITTING 1-3/16 fc sl x 27 Or, Inc. 13, 14 CONEXION	RACCORDO CONEXAO	RACCORD FITTING	ANSCHLUSSSTÜCK FITTING	3300
13		637-64236		1	O-RING 23,6 ID x 2,9 JUNTA HERMETICA	ANELLO TOROIDALE ANEL O	JOINT TORIQUE O-RING	O-RING O-RING	7176
14		238-6018		1	O-RING 3/4 ID x 1/16 JUNTA HERMETICA	ANELLO TOROIDALE ANEL O	JOINT TORIQUE O-RING	O-RING O-RING	7176
15		450502A1		1	TUBE ASSY. TUBO (CONJUNTO)	TUBO, COMPLESSIVO TUBO CONJUNTO	TUYAUTERIE TUBE ASSY.	ROHRLEITUNG TUBE ASSY.	P465
16		221580A1		3	PLUG M27 - 2, Inc. 17 TAPÓN	TAPPO BUJÃO	BOUCHON PLUG	STOPFEN PROP	050T
17		637-64236		1	O-RING 23,6 ID x 2,9 JUNTA HERMETICA	ANELLO TOROIDALE ANEL O	JOINT TORIQUE O-RING	O-RING O-RING	7176
18		221578A1		3	PLUG M18 - 1,5, Inc. 19 TAPÓN	TAPPO BUJÃO	BOUCHON PLUG	STOPFEN PROP	050T
19		637-63153		1	O-RING 15,3 ID x 2,2 JUNTA HERMETICA	ANELLO TOROIDALE O-RING	JOINT THORIQUE O-RING	DICHTRING O-RING	055A
20		385358A1		1	COUPLING 3/8 ELEMENTO DE ACOPLAI	TESTA A CAMPANA ELEMENTO DE ACOPLAI	CHAPE KOPPELING	GLOCKENKOPF KOBLING	109T
21		347755A1		1	COUPLING 3/4 in ELEMENTO DE ACOPLAI	TESTA A CAMPANA ELEMENTO DE ACOPLAI	CHAPE KOPPELING	GLOCKENKOPF KOBLING	109T
22	1	REF		1	INSTRUCTION Manifold MANUAL	ISTRUZIONI INSTRUCAO	NOTICE INSTRUCTION	HINWEIS SKO, INDRE	Z571

(1) See Figure 08-19

HYDRAULIC SYSTEM - MOTOR RETURN
IMPIANTO IDRAULICO - RITORNO DEL MOTORE
CIRCUIT HYDRAULIQUE - RETOUR DU MOTEUR
HYDRAULIKANLAGE - MOTOR-RÜCKLAUF

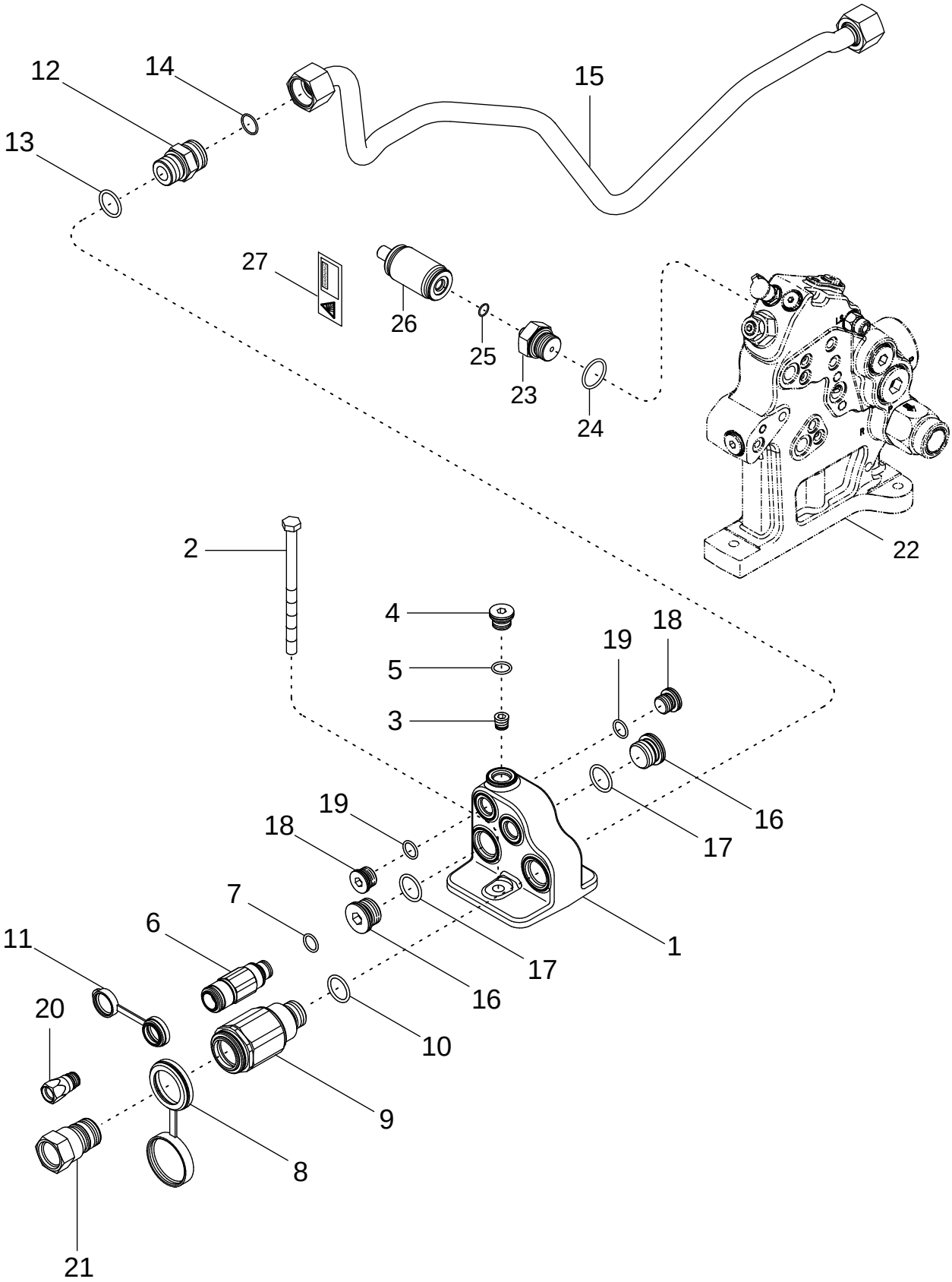

SISTEMA HIDRÁULICO - RETORNO DEL MOTOR
RETORNO DO MOTOR DO SISTEMA HIDRÁULICO
HYDRAULISCH SYSTEEM - MOTORRETOUR
HYDRAULIKSYSTEM - MOTOR RETUR

R	N	P.N.	MOD	Q	Description Denominacion	Descrizione Denominação	Description Beschrijving	Bezeichnung Beskrivelse	L.C.
23		87402820		2	CONNECTOR, HYD. M33 Or x M14 Or, Inc. 24, 25				
						RACCORDO IDRAULICO	RACCORD	STUTZEN	020R
					RACOR	CONECTOR	VERBINDING	FORSKRUNING	
24		637-64296		1	O-RING 29,6 ID x 2,9	ANELLO TOROIDALE	JOINT TORIQUE	O-RING	7176
					JUNTA HERMETICA	ANEL O	O-RING	O-RING	
25		637-63113		1	O-RING 11,3 ID x 2,2	ANELLO TOROIDALE	JOINT THORIQUE	DICHTRING	055A
					JUNTA HERMETICA	O-RING	O-RING	O-RING	
26		87402747		1	ACCUMULATOR	ACCUMULATORE	ACCUMULATEUR	DRUCKBEHÄLTER	037A
					ACUMULADOR	ACUMULADOR	ACCUMULATOR	AKKUMULATOR	
27		82029752		1	PLAQUE, DATA	TARGHETTA	PLAQUE MINERALOGIQU	TYPENSHILD	065T
					PLACA INDICADORA	PLACA IDENTIFICADORA	IDENTIFIKATIEPLAATJE	SKILT	

08-16		p1	11/04

PRIORITY AND REGULATOR VALVE ASSEMBLY
GRUPPO DELLE VALVOLE PRIORITARIA E DEL REGOLATORE
SOUPAPE DE PRIORITÉ ET RÉGULATEUR
PRIORITÄTS- UND STROMREGELVENTIL

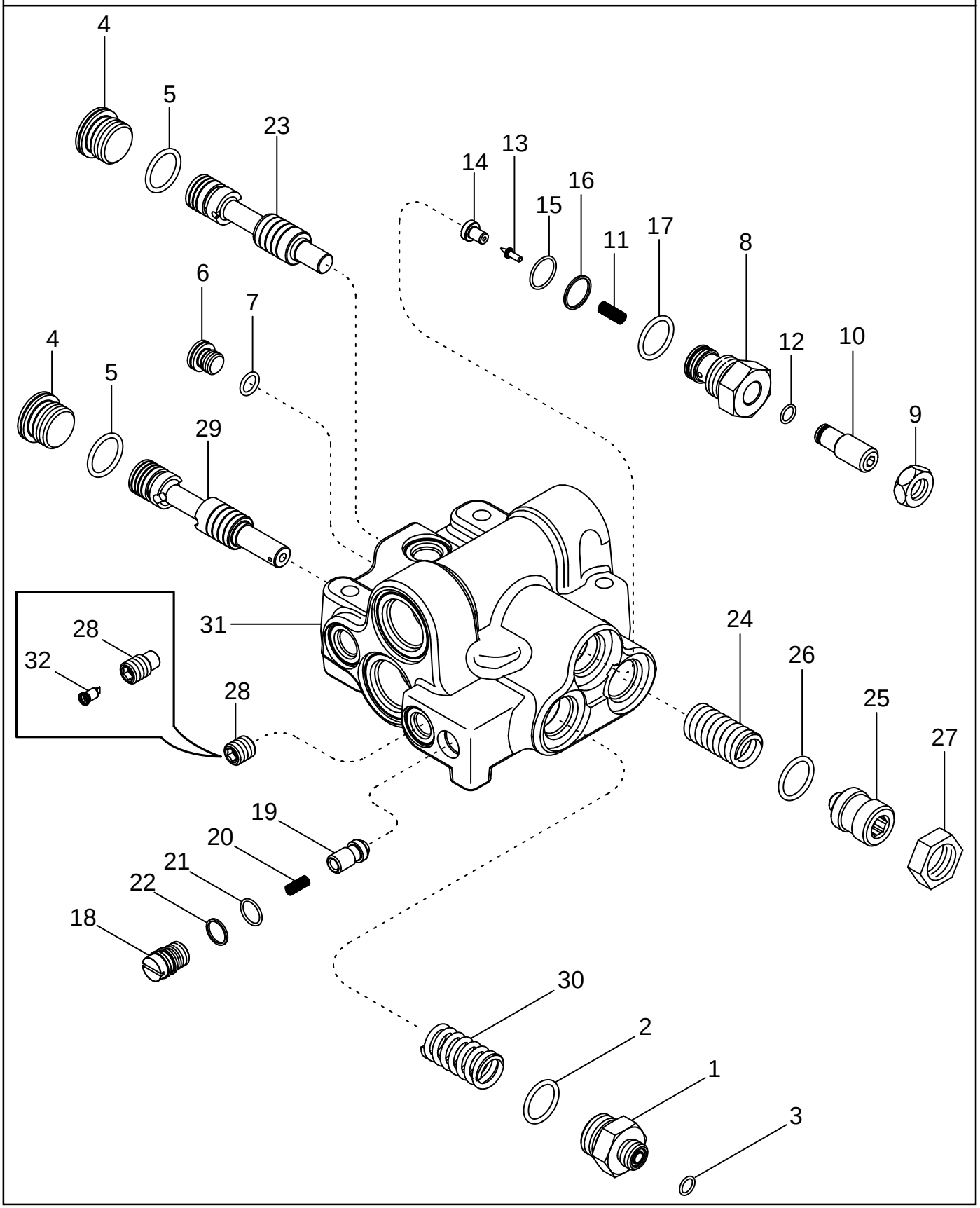

CONJUNTO DE LA VÁLVULA DE PRIORIDAD Y REGULADORA
CONJUNTO DA VÁLVULA DA PRIORIDADE E REGULADORA
VOORKEURS- EN REGULATEURKLEPCONSTRUCTIE
PRIORITETS- OG STYREVENTILSAMLING

R	N	P.N.	MOD	Q	Description Denominacion	Descrizione Denominação	Description Beschrijving	Bezeichnung Beskrivelse	L.C.
		404438A5	a	1	VALVE Priority And Regulator, Inc. 1 - 32				
						VALVOLA	SOUPAPE	VENTIL	9620
					VALVULA	VALVULA	VALVE	VALVE	
		87427822	b	1	VALVE Priority And Regulator, Inc. 1 - 31				
						VALVOLA	SOUPAPE	VENTIL	9620
					VALVULA	VALVULA	VALVE	VALVE	
1		**313940A1**		1	FITTING Inc. 2, 3	RACCORDO	RACCORD	ANSCHLUSSSTÜCK	3300
					CONEXION	CONEXAO	FITTING	FITTING	
2		**237-6012**		1	O-RING 59/64 ID x 7/64	ANELLO TOROIDALE	JOINT TORIQUE	O-RING	7176
					JUNTA HERMETICA	ANEL O	O-RING	O-RING	
3		**238-6012**		1	O-RING 3/8 ID x 1/16	ANELLO TOROIDALE	JOINT TORIQUE	O-RING	7176
					JUNTA HERMETICA	ANEL O	O-RING	O-RING	
4		**221580A1**		2	PLUG M27, Inc. 5	TAPPO	BOUCHON	STOPFEN	050T
					TAPÓN	BUJÃO	PLUG	PROP	
5		**637-64236**		1	O-RING 23,6 ID x 2,9	ANELLO TOROIDALE	JOINT TORIQUE	O-RING	7176
					JUNTA HERMETICA	ANEL O	O-RING	O-RING	
6		**221576A1**		1	PLUG M14 Or, Inc. 7	TAPPO	BOUCHON	STOPFEN	050T
					TAPÓN	BUJÃO	PLUG	PROP	
7		**637-63113**		1	O-RING 11,3 ID x 2,2	ANELLO TOROIDALE	JOINT THORIQUE	DICHTRING	055A
					JUNTA HERMETICA	O-RING	O-RING	O-RING	
		G108868		1	VALVE, PRESSURE RELIEF Inc. 8 - 17				
						VALVOLA, DI SICUREZZA	SOUPAPE, DÉCHARGE	ÜBERDRUCKVENTIL	007V
					VÁLVULA, DESCARGA	VÁLVULA, DESCARGA	OVERDRUKVENTIEL	SIKKERHEDSVENTIL	
8		**NSS**		1	NOT SERVICED SEPARATELY Cap				
						NON FORNITO SEPARAT	NON FOURNI SEPAREMI	KEIN ERSATZTEIL	064N
					NO SE REPARA SEPARA	NOT SERVICED SEPARA	NIET ALLEEN VERKRIJG	NOT SERVICED SEPARA	
9		**425-1510**		1	NUT 5/8 NF	DADO	ECROU	MUTTER	5780
					TUERCA	PORCA	MOER	MØTRIK	
10		**NSS**		1	NOT SERVICED SEPARATELY Plug				
						NON FORNITO SEPARAT	NON FOURNI SEPAREMI	KEIN ERSATZTEIL	064N
					NO SE REPARA SEPARA	NOT SERVICED SEPARA	NIET ALLEEN VERKRIJG	NOT SERVICED SEPARA	
11		**NSS**		1	NOT SERVICED SEPARATELY Spring				
						NON FORNITO SEPARAT	NON FOURNI SEPAREMI	KEIN ERSATZTEIL	064N
					NO SE REPARA SEPARA	NOT SERVICED SEPARA	NIET ALLEEN VERKRIJG	NOT SERVICED SEPARA	
12		**238-6012**		1	O-RING 3/8 ID x 1/16	ANELLO TOROIDALE	JOINT TORIQUE	O-RING	7176
					JUNTA HERMETICA	ANEL O	O-RING	O-RING	
13		**NSS**		1	NOT SERVICED SEPARATELY Poppet				
						NON FORNITO SEPARAT	NON FOURNI SEPAREMI	KEIN ERSATZTEIL	064N
					NO SE REPARA SEPARA	NOT SERVICED SEPARA	NIET ALLEEN VERKRIJG	NOT SERVICED SEPARA	
14		**NSS**		1	NOT SERVICED SEPARATELY Seat				
						NON FORNITO SEPARAT	NON FOURNI SEPAREMI	KEIN ERSATZTEIL	064N
					NO SE REPARA SEPARA	NOT SERVICED SEPARA	NIET ALLEEN VERKRIJG	NOT SERVICED SEPARA	
15		**238-6018**		1	O-RING 3/4 ID x 1/16	ANELLO TOROIDALE	JOINT TORIQUE	O-RING	7176
					JUNTA HERMETICA	ANEL O	O-RING	O-RING	
16		**G35540**		1	RING	ANELLO	ANNEAU	RING	045A
					ANILLO	ANEL	RING	RING	

(a) BSN AJB0304793
(b) ASN AJB0304793

PRIORITY AND REGULATOR VALVE ASSEMBLY
GRUPPO DELLE VALVOLE PRIORITARIA E DEL REGOLATORE
SOUPAPE DE PRIORITÉ ET RÉGULATEUR
PRIORITÄTS- UND STROMREGELVENTIL

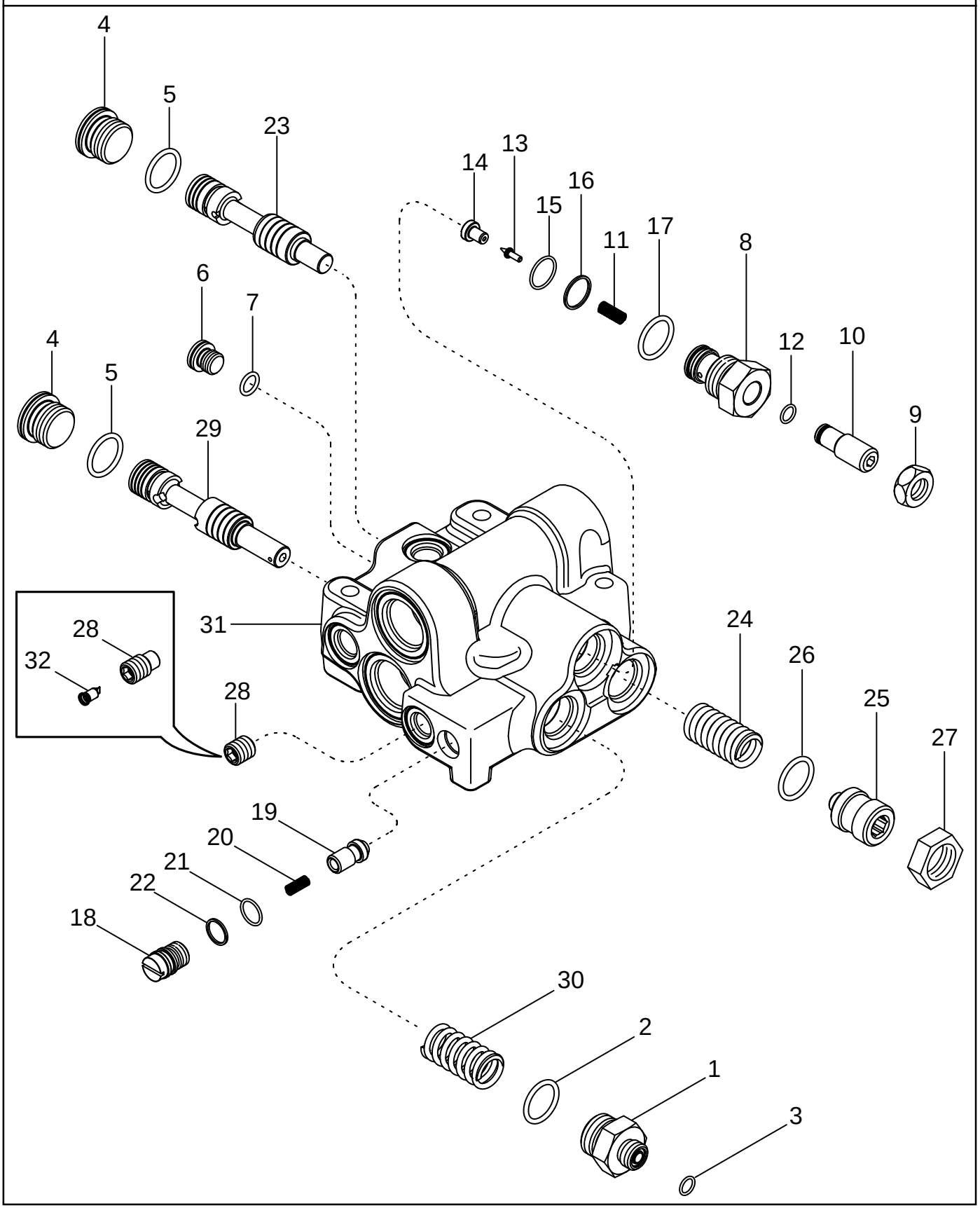

CONJUNTO DE LA VÁLVULA DE PRIORIDAD Y REGULADORA
CONJUNTO DA VÁLVULA DA PRIORIDADE E REGULADORA
VOORKEURS- EN REGULATEURKLEPCONSTRUCTIE
PRIORITETS- OG STYREVENTILSAMLING

R	N	P.N.	MOD	Q	Description Denominacion	Descrizione Denominação	Description Beschrijving	Bezeichnung Beskrivelse	L.C.
17		237-6012		1	O-RING 59/64 ID x 7/64 JUNTA HERMETICA	ANELLO TOROIDALE ANEL O	JOINT TORIQUE O-RING	O-RING O-RING	7176
		1542563C1		1	VALVE, CHECK Inc. 18 - 22 VALVULA DE CIERRE	VALVOLA, DI RITEGNO VALVULA CHECAGEM	CLAPET ANTI-RETOUR INZETSTUK	RÜCKSCHLAGVENTIL KONTRAVENTIL	P394
18		NSS		1	NOT SERVICED SEPARATELY Plug NO SE REPARA SEPARA	NON FORNITO SEPARAT NOT SERVICED SEPARA	NON FOURNI SEPAREMI NIET ALLEEN VERKRIJG	KEIN ERSATZTEIL NOT SERVICED SEPARA	064N
19		1543329C1		1	POPPET, VALVE VÁLVULA DE PASO	VALVOLA A FUNGO VALVULA	CLAPET POPPET, VALVE	VENTILKEGEL DOKVENTIL	P048
20		NSS		1	NOT SERVICED SEPARATELY Spring NO SE REPARA SEPARA	NON FORNITO SEPARAT NOT SERVICED SEPARA	NON FOURNI SEPAREMI NIET ALLEEN VERKRIJG	KEIN ERSATZTEIL NOT SERVICED SEPARA	064N
21		238-6015		1	O-RING 9/16 ID x 1/16 JUNTA HERMETICA	ANELLO TOROIDALE ANEL O	JOINT TORIQUE O-RING	O-RING O-RING	7176
22		G108723		1	RING ANILLO	ANELLO ANEL	ANNEAU RING	RING RING	045A
23		404442A1		1	SPOOL PISTONCILLO	PISTONCINO CARRETO	TIROIR SPOEL	SPULE SPOLE	134P
24		448102A2		1	SPRING RESORTE	MOLLA MOLA	RESSORT VEER	FEDER FJEDER	100M
25		313941A1		1	PLUG Inc. 26 TAPÓN	TAPPO BUJÃO	BOUCHON PLUG	STOPFEN PROP	050T
26		237-6012		1	O-RING 59/64 ID x 7/64 JUNTA HERMETICA	ANELLO TOROIDALE ANEL O	JOINT TORIQUE O-RING	O-RING O-RING	7176
27		218-1280		1	NUT 1-1/16 TUERCA	DADO PORCA	ECROU MOER	MUTTER MØTRIK	5780
28		118923A2	a	1	PLUG With Orifice, Inc. 32 TAPÓN	TAPPO BUJÃO	BOUCHON PLUG	STOPFEN PROP	050T
28		87427769	b	1	PLUG TAPÓN	TAPPO BUJÃO	BOUCHON PLUG	STOPFEN PROP	050T
29		404443A2	a	1	SPOOL PISTONCILLO	PISTONCINO CARRETO	TIROIR SPOEL	SPULE SPOLE	134P
29		87432325	b	1	SPOOL PISTONCILLO	PISTONCINO CARRETO	TIROIR SPOEL	SPULE SPOLE	134P
30		408447A1		1	SPRING, COMPRESSION MUELLE COMPRESOR	MOLLA, COMPRESSIONE MOLA DE COMPRESAO	RESSORT DE COMPRES SPRING, COMPRESSION	DRUCKFEDER SPRING, COMPRESSION	Z641
31		NSS		1	NOT SERVICED SEPARATELY Body NO SE REPARA SEPARA	NON FORNITO SEPARAT NOT SERVICED SEPARA	NON FOURNI SEPAREMI NIET ALLEEN VERKRIJG	KEIN ERSATZTEIL NOT SERVICED SEPARA	064N
32		133519C1	a	1	SCREEN PANTALLA PROTECTOR	SCHERMO ECRAN	ECRAN SCHERM	BILDSCHIRM SKAERM	047S

(a) BSN AJB0304793
(b) ASN AJB0304793

PTO AND DIFFERENTIAL LOCK VALVE ASSEMBLY
GRUPPO DELLA VALVOLA DI BLOCCAGGIO DELLA PTO E DEL DIFFERENZIALE
DISTRIBUTEUR DE LA PDF ET DU BLOCAGE DU DIFFÉRENTIEL
ZAPFWELLEN- UND DIFFERENTIALSPERRENVENTIL

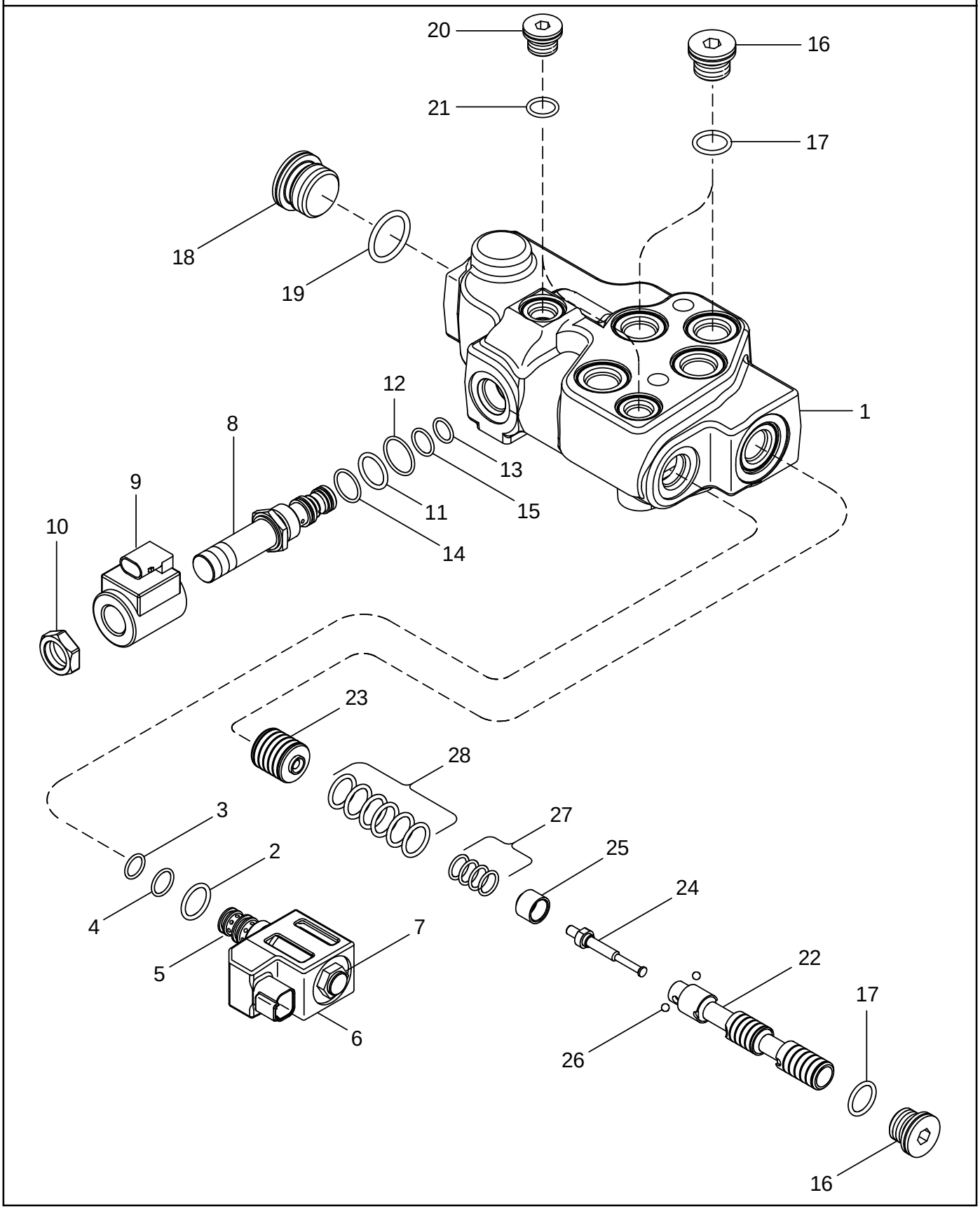

CONJUNTO DE LA VÁLVULA DE BLOQUEO DEL DIFERENCIAL Y TDF
CONJUNTO DA VÁLVULA DA TRANCA DO DIFERENCIAL E TDF
VERGRENDELKLEPCONSTRUCTIE VOOR AFTAKAS EN DIFFERENTIEEL
PTO OG DIFFERENTIALESPÆRREVENTILSAMLING

R	N	P.N.	MOD	Q	Description Denominacion	Descrizione Denominação	Description Beschrijving	Bezeichnung Beskrivelse	L.C.
		432906A1		1	VALVE PTO And Differential Lock, Inc. 1 - 27				
						VALVOLA	SOUPAPE	VENTIL	9620
					VALVULA	VALVULA	VALVE	VALVE	
1		NSS		1	NOT SERVICED SEPARATELY Body				
						NON FORNITO SEPARAT	NON FOURNI SEPAREMI	KEIN ERSATZTEIL	064N
					NO SE REPARA SEPARA	NOT SERVICED SEPARA	NIET ALLEEN VERKRIJG	NOT SERVICED SEPARA	
		349295A1		1	SOLENOID Valve, Inc. 2 - 7	SOLENOIDE	SOLENOIDE	MAGNETSPULE, MECH.	168S
					SOLENOIDE	SOLEMOID	SOLENOIDE	MAGNETVENTIL	
2		237-6008		1	O-RING 41/64 ID x 3/32	ANELLO TOROIDALE	JOINT THORIQUE	DICHTRING	055A
					JUNTA HERMETICA	O-RING	O-RING	O-RING	
3		238-5013		1	O-RING 7/16 ID x 1/16	ANELLO TOROIDALE	JOINT TORIQUE	O-RING	7176
					JUNTA HERMETICA	ANEL O	O-RING	O-RING	
4		238-5014		1	O-RING 1/2 ID x 1/16	ANELLO TOROIDALE	JOINT TORIQUE	O-RING	7176
					JUNTA HERMETICA	ANEL O	O-RING	O-RING	
5		NSS		1	NOT SERVICED SEPARATELY Core				
						NON FORNITO SEPARAT	NON FOURNI SEPAREMI	KEIN ERSATZTEIL	064N
					NO SE REPARA SEPARA	NOT SERVICED SEPARA	NIET ALLEEN VERKRIJG	NOT SERVICED SEPARA	
6		298614A1		1	COIL	BOBINA	BOBINE	SPULE	083B
					BOBINA	BOBINE	KLOS	SPOLE	
7		349292A1		1	NUT	DADO	ECROU	MUTTER	010D
					TUERCA	PORCA	MOER	MØTRIK	
		239552A2		1	VALVE Solenoid, Inc. 8 -14	VALVOLA	VALVE	VENTIL	P468
					VALVULA	VALVULA	VALVE	VALVE	
8		NSS		1	NOT SERVICED SEPARATELY Core				
						NON FORNITO SEPARAT	NON FOURNI SEPAREMI	KEIN ERSATZTEIL	064N
					NO SE REPARA SEPARA	NOT SERVICED SEPARA	NIET ALLEEN VERKRIJG	NOT SERVICED SEPARA	
9		NSS		1	NOT SERVICED SEPARATELY Coil				
						NON FORNITO SEPARAT	NON FOURNI SEPAREMI	KEIN ERSATZTEIL	064N
					NO SE REPARA SEPARA	NOT SERVICED SEPARA	NIET ALLEEN VERKRIJG	NOT SERVICED SEPARA	
10		NSS		1	NOT SERVICED SEPARATELY Nut				
						NON FORNITO SEPARAT	NON FOURNI SEPAREMI	KEIN ERSATZTEIL	064N
					NO SE REPARA SEPARA	NOT SERVICED SEPARA	NIET ALLEEN VERKRIJG	NOT SERVICED SEPARA	
		308245A1		1	KIT, SEALS Inc. 11 - 14	SERIE GUARNIZIONI	POCHETTE DE JOINTS	DICHTUNGSSATZ	630S
					SERIE DE JUNTAS	CONJUNTO DE JUNTAS	DICHTINGSKIT	PAKNINGSSAET	
11		238-7016		1	O-RING 5/8 ID x 1/16	ANELLO TOROIDALE	JOINT TORIQUE	O-RING	7176
					JUNTA HERMETICA	ANEL O	O-RING	O-RING	
12		238-7018		1	O-RING 3/4 ID x 1/16	ANELLO TOROIDALE	JOINT TORIQUE	O-RING	7176
					JUNTA HERMETICA	ANEL O	O-RING	O-RING	
13		238-6008		1	O-RING 3/16 ID x 1/16	ANELLO TOROIDALE	JOINT TORIQUE	O-RING	7176
					JUNTA HERMETICA	ANEL O	O-RING	O-RING	
14		238-5014		1	O-RING 1/2 ID x 1/16	ANELLO TOROIDALE	JOINT TORIQUE	O-RING	7176
					JUNTA HERMETICA	ANEL O	O-RING	O-RING	
15		238-5013		1	O-RING 7/16 ID x 1/16	ANELLO TOROIDALE	JOINT TORIQUE	O-RING	7176
					JUNTA HERMETICA	ANEL O	O-RING	O-RING	
16		221578A1		3	PLUG M18, Inc. 17	TAPPO	BOUCHON	STOPFEN	050T
					TAPÓN	BUJÃO	PLUG	PROP	
17		637-63153		1	O-RING 15,3 ID x 2,2	ANELLO TOROIDALE	JOINT THORIQUE	DICHTRING	055A
					JUNTA HERMETICA	O-RING	O-RING	O-RING	

PTO AND DIFFERENTIAL LOCK VALVE ASSEMBLY
GRUPPO DELLA VALVOLA DI BLOCCAGGIO DELLA PTO E DEL DIFFERENZIALE
DISTRIBUTEUR DE LA PDF ET DU BLOCAGE DU DIFFÉRENTIEL
ZAPFWELLEN- UND DIFFERENTIALSPERRENVENTIL

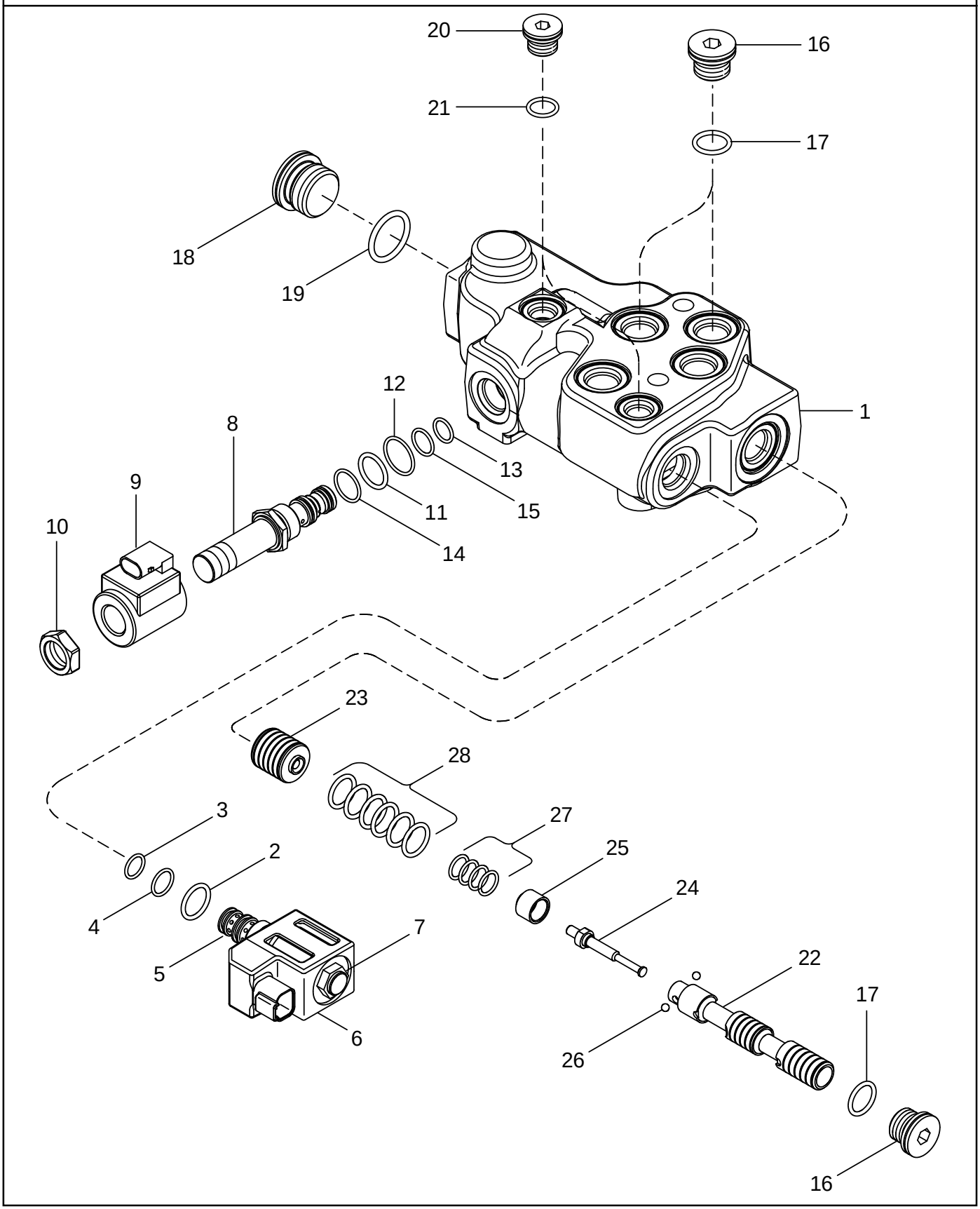

CONJUNTO DE LA VÁLVULA DE BLOQUEO DEL DIFERENCIAL Y TDF
CONJUNTO DA VÁLVULA DA TRANCA DO DIFERENCIAL E TDF
VERGRENDELKLEPCONSTRUCTIE VOOR AFTAKAS EN DIFFERENTIEEL
PTO OG DIFFERENTIALESPÆRREVENTILSAMLING

R	N	P.N.	MOD	Q	Description Denominacion	Descrizione Denominação	Description Beschrijving	Bezeichnung Beskrivelse	L.C.
18		221580A1		1	PLUG M27, Inc. 19 TAPÓN	TAPPO BUJÃO	BOUCHON PLUG	STOPFEN PROP	050T
19		637-64236		1	O-RING 23,6 ID x 2,9 JUNTA HERMETICA	ANELLO TOROIDALE ANEL O	JOINT TORIQUE O-RING	O-RING O-RING	7176
20		221576A1		2	PLUG M14 Or, Inc. 21 TAPÓN	TAPPO BUJÃO	BOUCHON PLUG	STOPFEN PROP	050T
21		637-63113		1	O-RING 11,3 ID x 2,2 JUNTA HERMETICA	ANELLO TOROIDALE O-RING	JOINT THORIQUE O-RING	DICHTRING O-RING	055A
		283642A4		1	SPOOL Inc. 22 - 28 PISTONCILLO	PISTONCINO CARRETO	TIROIR SPOEL	SPULE SPOLE	134P
22		NSS		1	NOT SERVICED SEPARATELY Spool				
						NON FORNITO SEPARAT	NON FOURNI SEPAREMI	KEIN ERSATZTEIL	064N
					NO SE REPARA SEPARA	NOT SERVICED SEPARA	NIET ALLEEN VERKRIJG	NOT SERVICED SEPARA	
23		NSS		1	NOT SERVICED SEPARATELY Piston				
						NON FORNITO SEPARAT	NON FOURNI SEPAREMI	KEIN ERSATZTEIL	064N
					NO SE REPARA SEPARA	NOT SERVICED SEPARA	NIET ALLEEN VERKRIJG	NOT SERVICED SEPARA	
24		NSS		1	NOT SERVICED SEPARATELY Pin				
						NON FORNITO SEPARAT	NON FOURNI SEPAREMI	KEIN ERSATZTEIL	064N
					NO SE REPARA SEPARA	NOT SERVICED SEPARA	NIET ALLEEN VERKRIJG	NOT SERVICED SEPARA	
25		NSS		1	NOT SERVICED SEPARATELY Sleeve				
						NON FORNITO SEPARAT	NON FOURNI SEPAREMI	KEIN ERSATZTEIL	064N
					NO SE REPARA SEPARA	NOT SERVICED SEPARA	NIET ALLEEN VERKRIJG	NOT SERVICED SEPARA	
26		NSS		2	NOT SERVICED SEPARATELY Ball				
						NON FORNITO SEPARAT	NON FOURNI SEPAREMI	KEIN ERSATZTEIL	064N
					NO SE REPARA SEPARA	NOT SERVICED SEPARA	NIET ALLEEN VERKRIJG	NOT SERVICED SEPARA	
27		NSS		1	NOT SERVICED SEPARATELY Spring				
						NON FORNITO SEPARAT	NON FOURNI SEPAREMI	KEIN ERSATZTEIL	064N
					NO SE REPARA SEPARA	NOT SERVICED SEPARA	NIET ALLEEN VERKRIJG	NOT SERVICED SEPARA	
28		NSS		1	NOT SERVICED SEPARATELY Spring				
						NON FORNITO SEPARAT	NON FOURNI SEPAREMI	KEIN ERSATZTEIL	064N
					NO SE REPARA SEPARA	NOT SERVICED SEPARA	NIET ALLEEN VERKRIJG	NOT SERVICED SEPARA	

08-18		p1	11/04

REMOTE HYDRAULIC VALVE STACK
TUBO DELLA VALVOLA IDRAULICA AUSILIARIA
DISTRIBUTEURS DE COMMANDE HYDRAULIQUES À DISTANCE
HYDRAULISCHES ZUSATZSTEUERGERÄT

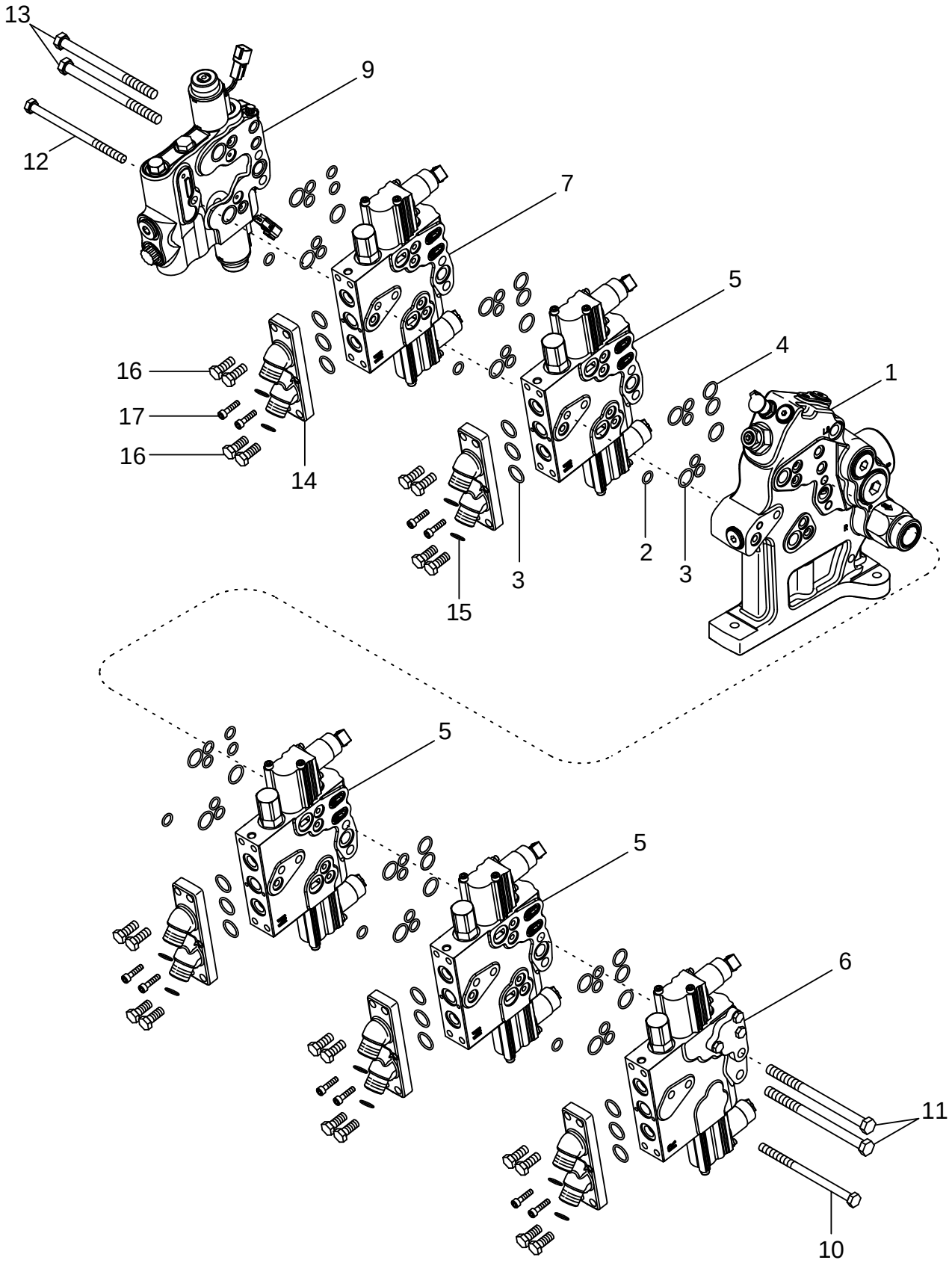

BLOQUE DE VÁLVULAS HIDRÁULICAS REMOTAS
CONJUNTO DE VÁLVULAS HIDRÁULICAS REMOTAS
KLEPPENREK EXTERNE HYDRAULICA
HYDRAULISK FJERNVENTILSTAK

R	N	P.N.	MOD	Q	Description Denominacion	Descrizione Denominação	Description Beschrijving	Bezeichnung Beskrivelse	L.C.
1	1	447528A3	a	1	VALVE Manifold VALVULA	VALVOLA VALVULA	SOUPAPE VALVE	VENTIL VALVE	9620
1	1	447528A4	b	1	VALVE Manifold VALVULA	VALVOLA VALVULA	SOUPAPE VALVE	VENTIL VALVE	9620
2		238-6112		AR	O-RING 1/2 ID x 3/32 JUNTA HERMETICA	ANELLO TOROIDALE ANEL O	JOINT TORIQUE O-RING	O-RING O-RING	7176
3		238-6117		AR	O-RING 13/16 ID x 3/32 JUNTA HERMETICA	ANELLO TOROIDALE ANEL O	JOINT TORIQUE O-RING	O-RING O-RING	7176
4		238-6116		AR	O-RING 3/4 ID x 3/32 JUNTA HERMETICA	ANELLO TOROIDALE ANEL O	JOINT TORIQUE O-RING	O-RING O-RING	7176
5	2	447226A5		AR	VALVE Standard VALVULA	VALVOLA VALVULA	SOUPAPE VALVE	VENTIL VALVE	9620
6	2	447220A6		1	VALVE Right Hand End VALVULA	VALVOLA VALVULA	SOUPAPE VALVE	VENTIL VALVE	9620
7	2	447223A4		1	VALVE Left Hand End, Without Hitch VALVULA	VALVOLA VALVULA	SOUPAPE VALVE	VENTIL VALVE	9620
7	2	447226A5		AR	VALVE Left Hand End With Hitch VALVULA	VALVOLA VALVULA	SOUPAPE VALVE	VENTIL VALVE	9620
9	3	412509A3	c	1	VALVE Hitch VALVULA	VALVOLA VALVULA	VALVE VALVE	VENTIL VALVE	P468
9	3	412509A4	d	1	VALVE Hitch VALVULA	VALVOLA VALVULA	VALVE VALVE	VENTIL VALVE	P468
10		828-10070		1	SCREW M10 x 70; 10.9, 3 Remotes TORNILLO	VITE PARAFUSO	VIS SCHROEF	SCHRAUBE SKRUE	7450
10		828-10110		1	BOLT M10 x 110; 10.9, 4 Remotes TORNILLO	BULLONE PARAFUSO	BOULON BOUT	SCHAUBENBOLZEN SKRUE	0810
10		828-10160		1	BOLT M10 x 160; 10.9, 5 Remotes TORNILLO	BULLONE PARAFUSO	BOULON BOUT	SCHAUBENBOLZEN SKRUE	0810
11		828-12080		2	SCREW M12 x 80; 10.9, 3 Remotes TORNILLO	VITE PARAFUSO	VIS SCHROEF	SCHRAUBE SKRUE	040V
11		828-12120		2	SCREW M12 x 120; 10.9, 4 Remotes TORNILLO	VITE PARAFUSO	VIS SCHROEF	SCHRAUBE SKRUE	7450
11		828-12170		2	BOLT M12 x 170; 10.9, 5 Remotes TORNILLO	BULLONE PARAFUSO	BOULON BOUT	SCHAUBENBOLZEN SKRUE	140B

(1) See Figure 08-19
(2) See Figure 08-20
(3) See Figure 08-21
(a) BSN AJB0304776
(b) ASN AJB0304776
(c) BSN AJB0303604
(d) ASN AJB0303604

REMOTE HYDRAULIC VALVE STACK
TUBO DELLA VALVOLA IDRAULICA AUSILIARIA
DISTRIBUTEURS DE COMMANDE HYDRAULIQUES À DISTANCE
HYDRAULISCHES ZUSATZSTEUERGERÄT

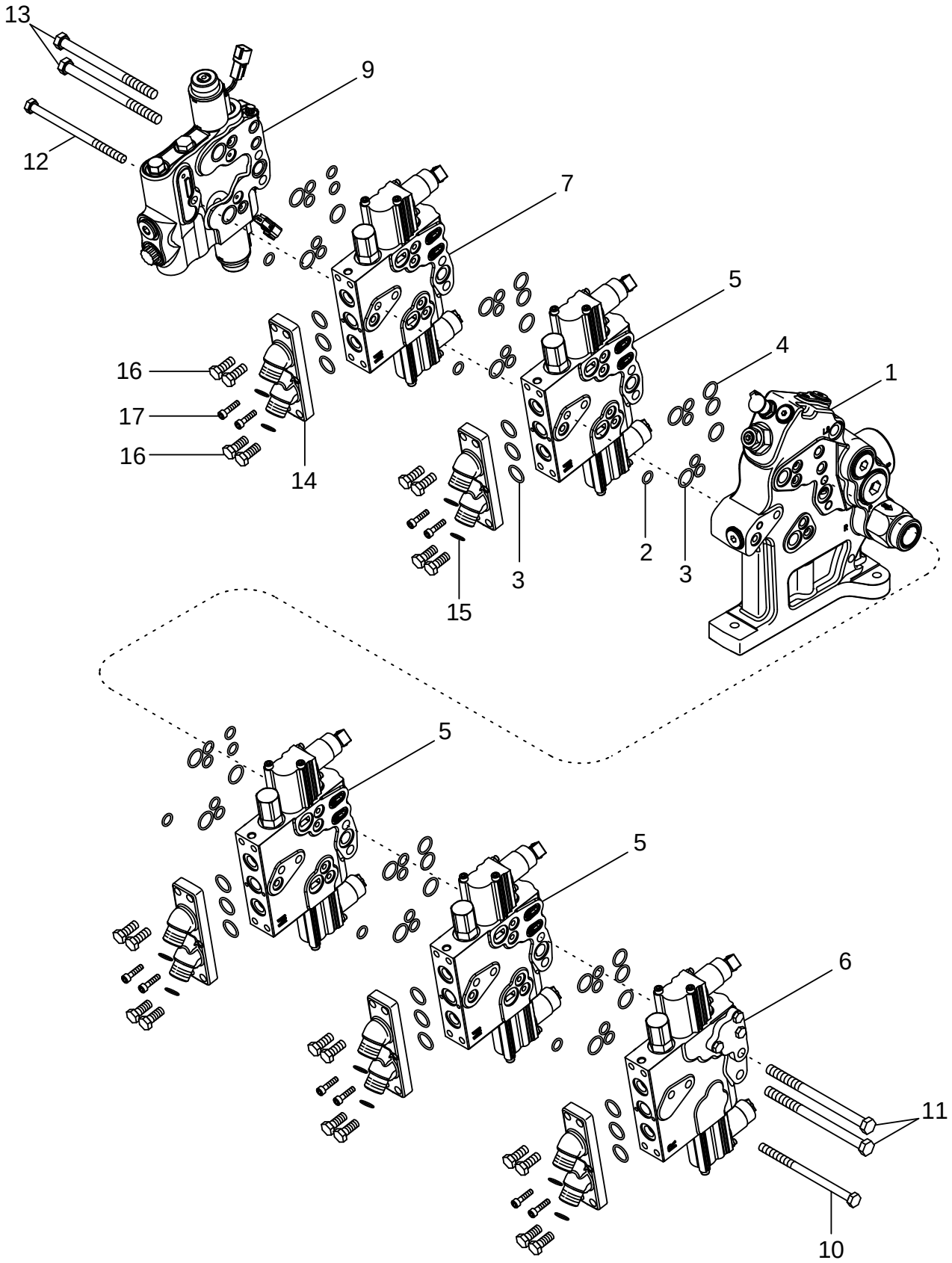

BLOQUE DE VÁLVULAS HIDRÁULICAS REMOTAS
CONJUNTO DE VÁLVULAS HIDRÁULICAS REMOTAS
KLEPPENREK EXTERNE HYDRAULICA
HYDRAULISK FJERNVENTILSTAK

R	N	P.N.	MOD	Q	Description Denominacion	Descrizione Denominação	Description Beschrijving	Bezeichnung Beskrivelse	L.C.
12		828-10110		1	BOLT M10 x 110; 10.9, Without Hitch				
						BULLONE	BOULON	SCHAUBENBOLZEN	0810
					TORNILLO	PARAFUSO	BOUT	SKRUE	
12		828-10160		1	BOLT M10 x 160; 10.9, With Hitch				
						BULLONE	BOULON	SCHAUBENBOLZEN	0810
					TORNILLO	PARAFUSO	BOUT	SKRUE	
13		828-12110		2	SCREW M12 x 110; 10.9, Without Hitch				
						VITE	VIS	SCHRAUBE	7450
					TORNILLO	PARAFUSO	SCHROEF	SKRUE	
13		828-12160		2	SCREW M12 x 160; 10.9, With Hitch				
						VITE	VIS	SCHRAUBE	7450
					TORNILLO	PARAFUSO	SCHROEF	SKRUE	
14		435643A1		AR	COVER Inc. 15	COPERCHIO	COUVERCLE	DECKEL	265C
					TAPADERA	COBERTA	DEKSEL	DÆKSEL	
15		238-6016		2	O-RING 5/8 ID x 1/16	ANELLO TOROIDALE	JOINT TORIQUE	O-RING	7176
					JUNTA HERMETICA	ANEL O	O-RING	O-RING	
16		628-10025		AR	SCREW M10 x 25, 10.9	VITE	VIS	SCHRAUBE	7450
					TORNILLO	PARAFUSO	SCHROEF	SKRUE	
17		864-6025		AR	SCREW M6 x 25; 8.8	VITE	VIS	SCHRAUBE	7450
					TORNILLO	PARAFUSO	SCHROEF	SKRUE	

MANIFOLD VALVE ASSEMBLY
GRUPPO DELLA VALVOLA DEL COLLETTORE
CLAPET DU COLLECTEUR
VENTILBLOCK

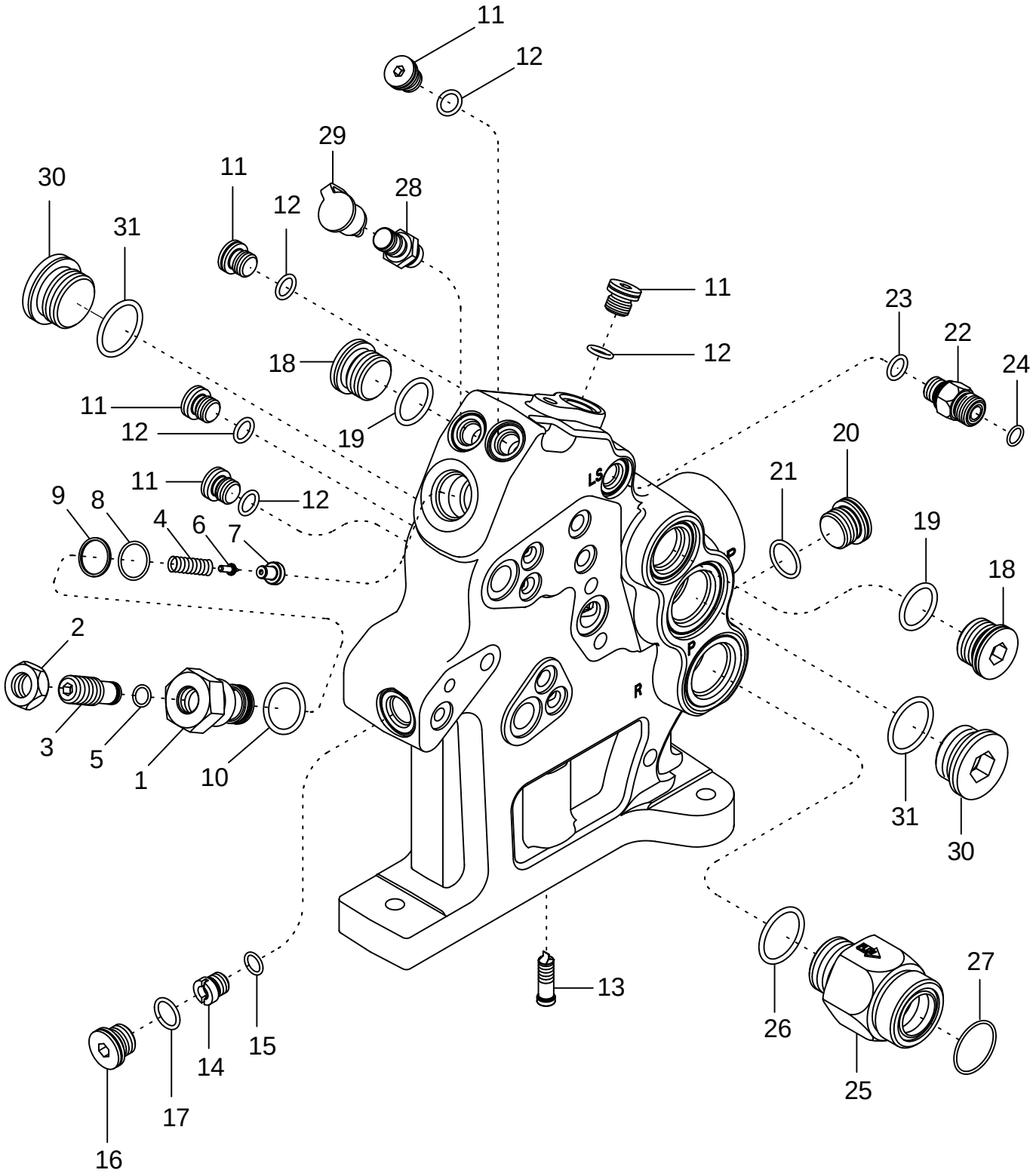

CONJUNTO DE LA VÁLVULA DEL BLOQUE DE DISTRIBUCIÓN
CONJUNTO DA VÁLVULA DO TUBO DE DISTRIBUIÇÃO
KLEPCONSTRUCTIE VERDEELSTUK
MANIFOLD VENTILSAMLING

R	N	P.N.	MOD	Q	Description Denominacion	Descrizione Denominação	Description Beschrijving	Bezeichnung Beskrivelse	L.C.
		447528A3	a	1	VALVE Manifold, Inc. 1 - 31	VALVOLA	SOUPAPE	VENTIL	9620
					VALVULA	VALVULA	VALVE	VALVE	
		447528A4	b	1	VALVE Manifold, Inc. 1 - 31	VALVOLA	SOUPAPE	VENTIL	9620
					VALVULA	VALVULA	VALVE	VALVE	
		G108868		1	VALVE, PRESSURE RELIEF Inc. 1 - 10				
						VALVOLA, DI SICUREZZA	SOUPAPE, DÉCHARGE	ÜBERDRUCKVENTIL	007V
					VÁLVULA, DESCARGA	VÁLVULA, DESCARGA	OVERDRUKVENTIEL	SIKKERHEDSVENTIL	
1		**NSS**		1	NOT SERVICED SEPARATELY Cap				
						NON FORNITO SEPARAT	NON FOURNI SEPAREMI	KEIN ERSATZTEIL	064N
					NO SE REPARA SEPARA	NOT SERVICED SEPARA	NIET ALLEEN VERKRIJG	NOT SERVICED SEPARA	
2		**425-1510**		1	NUT 5/8 NF	DADO	ECROU	MUTTER	5780
					TUERCA	PORCA	MOER	MØTRIK	
3		**NSS**		1	NOT SERVICED SEPARATELY Plug				
						NON FORNITO SEPARAT	NON FOURNI SEPAREMI	KEIN ERSATZTEIL	064N
					NO SE REPARA SEPARA	NOT SERVICED SEPARA	NIET ALLEEN VERKRIJG	NOT SERVICED SEPARA	
4		**NSS**		1	NOT SERVICED SEPARATELY Spring				
						NON FORNITO SEPARAT	NON FOURNI SEPAREMI	KEIN ERSATZTEIL	064N
					NO SE REPARA SEPARA	NOT SERVICED SEPARA	NIET ALLEEN VERKRIJG	NOT SERVICED SEPARA	
5		**238-6012**		1	O-RING 3/8 ID x 1/16	ANELLO TOROIDALE	JOINT TORIQUE	O-RING	7176
					JUNTA HERMETICA	ANEL O	O-RING	O-RING	
6		**NSS**		1	NOT SERVICED SEPARATELY Poppet				
						NON FORNITO SEPARAT	NON FOURNI SEPAREMI	KEIN ERSATZTEIL	064N
					NO SE REPARA SEPARA	NOT SERVICED SEPARA	NIET ALLEEN VERKRIJG	NOT SERVICED SEPARA	
7		**NSS**		1	NOT SERVICED SEPARATELY Seat				
						NON FORNITO SEPARAT	NON FOURNI SEPAREMI	KEIN ERSATZTEIL	064N
					NO SE REPARA SEPARA	NOT SERVICED SEPARA	NIET ALLEEN VERKRIJG	NOT SERVICED SEPARA	
8		**238-6018**		1	O-RING 3/4 ID x 1/16	ANELLO TOROIDALE	JOINT TORIQUE	O-RING	7176
					JUNTA HERMETICA	ANEL O	O-RING	O-RING	
9		**G35540**		1	RING	ANELLO	ANNEAU	RING	045A
					ANILLO	ANEL	RING	RING	
10		**237-6012**		1	O-RING 59/64 ID x 7/64	ANELLO TOROIDALE	JOINT TORIQUE	O-RING	7176
					JUNTA HERMETICA	ANEL O	O-RING	O-RING	
11		**221576A1**		5	PLUG M14 Or, Inc. 12	TAPPO	BOUCHON	STOPFEN	050T
					TAPÓN	BUJÃO	PLUG	PROP	
12		**637-63113**		1	O-RING 11,3 ID x 2,2	ANELLO TOROIDALE	JOINT THORIQUE	DICHTRING	055A
					JUNTA HERMETICA	O-RING	O-RING	O-RING	
13		**326965A1**		1	SCREEN	VAGLIO	TAMIS	SIEB	P584
					CERNIDOR (CONJUNTO	TELA	SCREEN	SCREEN	
14		**431479A1**		1	VALVE, CHECK Inc. 15	VALVOLA, DI RITEGNO	CLAPET ANTI-RETOUR	RÜCKSCHLAGVENTIL	P394
					VALVULA DE CIERRE	VALVULA CHECAGEM	INZETSTUK	KONTRAVENTIL	
15		**237-6005**		1	O-RING 13/32 ID x 5/64	ANELLO TOROIDALE	JOINT TORIQUE	O-RING	7176
					JUNTA HERMETICA	ANEL O	O-RING	O-RING	
16		**221578A1**		1	PLUG M18, Inc. 17	TAPPO	BOUCHON	STOPFEN	050T
					TAPÓN	BUJÃO	PLUG	PROP	
17		**637-63153**		1	O-RING 15,3 ID x 2,2	ANELLO TOROIDALE	JOINT THORIQUE	DICHTRING	055A
					JUNTA HERMETICA	O-RING	O-RING	O-RING	

(a) BSN AJB0304776
(b) ASN AJB0304776

MANIFOLD VALVE ASSEMBLY
GRUPPO DELLA VALVOLA DEL COLLETTORE
CLAPET DU COLLECTEUR
VENTILBLOCK

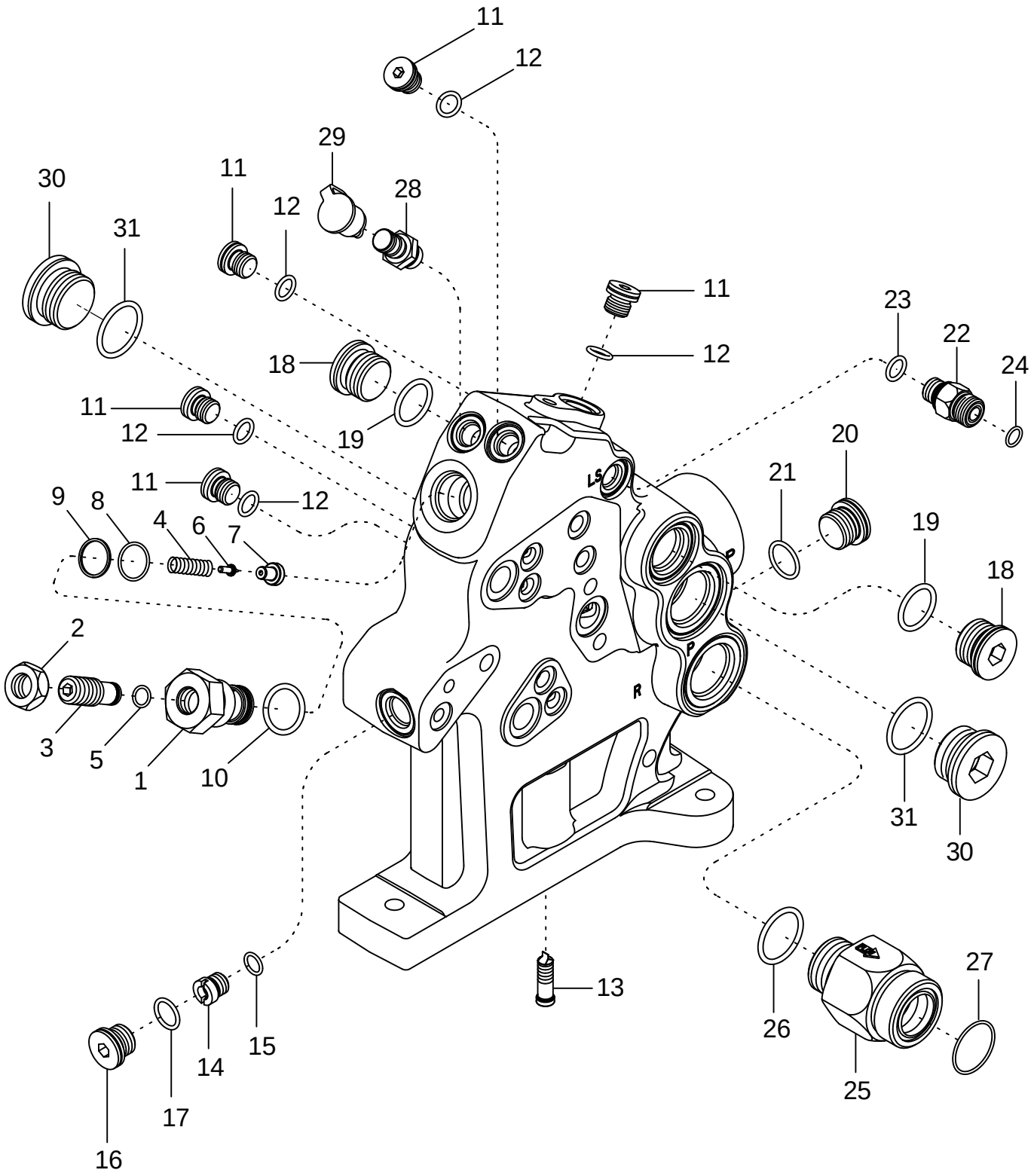

CONJUNTO DE LA VÁLVULA DEL BLOQUE DE DISTRIBUCIÓN
CONJUNTO DA VÁLVULA DO TUBO DE DISTRIBUIÇÃO
KLEPCONSTRUCTIE VERDEELSTUK
MANIFOLD VENTILSAMLING

R	N	P.N.	MOD	Q	Description Denominacion	Descrizione Denominação	Description Beschrijving	Bezeichnung Beskrivelse	L.C.
18		221580A1		2	PLUG M27, Inc. 19 TAPÓN	TAPPO BUJÃO	BOUCHON PLUG	STOPFEN PROP	050T
19		637-64236		1	O-RING 23,6 ID x 2,9 JUNTA HERMETICA	ANELLO TOROIDALE ANEL O	JOINT TORIQUE O-RING	O-RING O-RING	7176
20		221579A1		1	PLUG M22, Inc. 21 TAPÓN	TAPPO BUJÃO	BOUCHON PLUG	STOPFEN PROP	050T
21		637-63193		1	O-RING 19,3 ID x 2,2 JUNTA HERMETICA	ANELLO TOROIDALE ANEL O	JOINT TORIQUE O-RING	O-RING O-RING	7176
22		223971A1	a	1	VALVE, CHECK Inc. 23, 24 VALVULA DE CIERRE	VALVOLA, DI RITEGNO VALVULA CHECAGEM	CLAPET ANTI-RETOUR INZETSTUK	RÜCKSCHLAGVENTIL KONTRAVENTIL	P394
22		87429247	b	1	VALVE, CHECK Inc. 23, 24 VALVULA DE CIERRE	VALVOLA, DI RITEGNO VALVULA CHECAGEM	CLAPET ANTI-RETOUR INZETSTUK	RÜCKSCHLAGVENTIL KONTRAVENTIL	P394
23		637-63113		1	O-RING 11,3 ID x 2,2 JUNTA HERMETICA	ANELLO TOROIDALE O-RING	JOINT THORIQUE O-RING	DICHTRING O-RING	055A
24		238-6012		1	O-RING 3/8 ID x 1/16 JUNTA HERMETICA	ANELLO TOROIDALE ANEL O	JOINT TORIQUE O-RING	O-RING O-RING	7176
25		254851A1		1	VALVE, CHECK Inc. 26, 27 VALVULA ANTIRRETORN	VALVOLA, DI RITEGNO VALVULA CHECAGEM	SOUPAPE ANTI RETOUR VALVE, CHECK	RUECKSCHLAGVENTIL VALVE, CHECK	P140
26		637-64296		1	O-RING 29,6 ID x 2,9 JUNTA HERMETICA	ANELLO TOROIDALE ANEL O	JOINT TORIQUE O-RING	O-RING O-RING	7176
27		238-6025		1	O-RING 1-3/16 ID x 1/16 JUNTA HERMETICA	ANELLO TOROIDALE ANEL O	JOINT TORIQUE O-RING	O-RING O-RING	7176
28		178889A1		1	FITTING Inc. 29 CONEXION	RACCORDO CONEXAO	RACCORD FITTING	ANSCHLUSSSTÜCK FITTING	3300
29		143349A1		1	CAP TAPON DEL DEPOSITO	TAPPO SERBATOIO TAMPAO DE RESERVAT	CHAPEAU RESERVOIRDOP	KAPPE TANKDAEKSEL	052T
30		221527A1		2	PLUG M33 Or, Inc. 31 TAPÓN	TAPPO BUJÃO	BOUCHON PLUG	STOPFEN PROP	050T
31		637-64296		1	O-RING 29,6 ID x 2,9 JUNTA HERMETICA	ANELLO TOROIDALE ANEL O	JOINT TORIQUE O-RING	O-RING O-RING	7176
32		87441298		1	KIT, SERVICE (Not Shown) KIT, SERVICE	KIT ASSISTENZIALE KIT, SERVICE	KIT ASSISTANCE KIT, SERVICE	WARTUNGSSATZ SERVICE SAET	021K

(a) BSN AJB0304776
(b) ASN AJB0304776

08-20		p1	11/04

REMOTE HYDRAULIC CONTROL VALVE
VALVOLA DI COMANDO IDRAULICA AUSILIARIA
DISTRIBUTEUR HYDRAULIQUE DE COMMANDE À DISTANCE
HYDRAULISCHES ZUSATZSTEUERGERÄTE-VENTIL

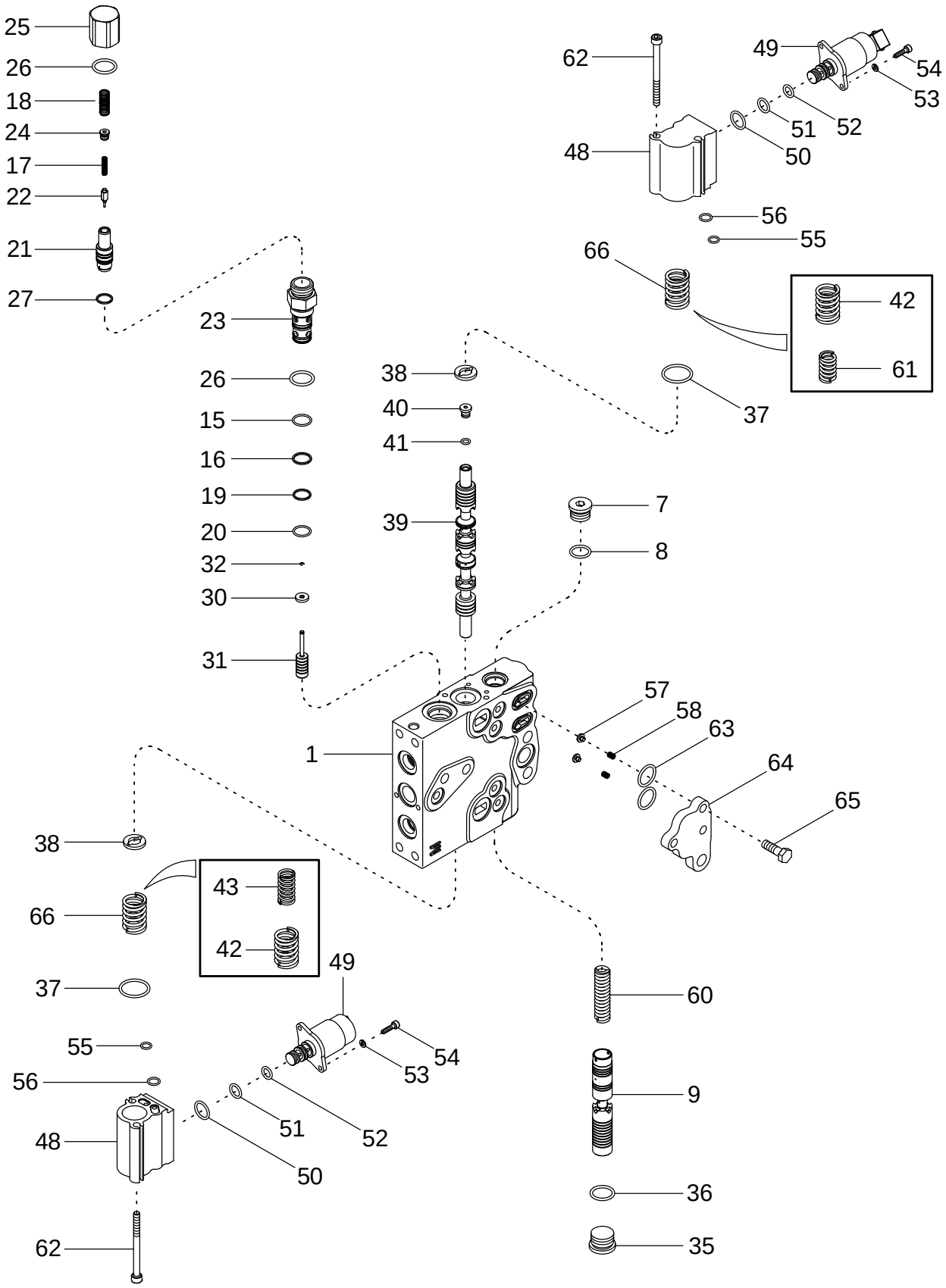

VALVULA DE CONTROL HIDRÁULICA REMOTA
VÁLVULA DE CONTROLO HIDRÁULICO REMOTA
REGELKLEP EXTERNE HYDRAULICA
HYDRAULISK FJERNSTYREVENTIL

R	N	P.N.	MOD	Q	Description Denominacion	Descrizione Denominação	Description Beschrijving	Bezeichnung Beskrivelse	L.C.
		447226A5		AR	VALVE Standard, Inc. 1 - 62	VALVOLA	SOUPAPE	VENTIL	9620
					VALVULA	VALVULA	VALVE	VALVE	
		447220A6		1	VALVE Right Hand End, Inc. 1 - 65				
						VALVOLA	SOUPAPE	VENTIL	9620
					VALVULA	VALVULA	VALVE	VALVE	
		447223A4		1	VALVE Left Hand End Without Hitch, Inc. 1 - 62				
						VALVOLA	SOUPAPE	VENTIL	9620
					VALVULA	VALVULA	VALVE	VALVE	
		447226A5		1	VALVE Left Hand End With Hitch, Inc. 1 - 62				
						VALVOLA	SOUPAPE	VENTIL	9620
					VALVULA	VALVULA	VALVE	VALVE	
1		NSS		1	NOT SERVICED SEPARATELY Body				
						NON FORNITO SEPARAT	NON FOURNI SEPAREMI	KEIN ERSATZTEIL	064N
					NO SE REPARA SEPARA	NOT SERVICED SEPARA	NIET ALLEEN VERKRIJG	NOT SERVICED SEPARA	
7		218-5210		1	PLUG 3/4 Or, Inc. 8	TAPPO	BOUCHON	STOPFEN	6400
					TAPÓN	BUJAO	PLUG	PROP	
8		237-6010		1	O-RING 3/4 ID x 3/32	ANELLO TOROIDALE	JOINT TORIQUE	O-RING	7176
					JUNTA HERMETICA	ANEL O	O-RING	O-RING	
9		446403A1		1	SPOOL	PISTONCINO	TIROIR	SPULE	134P
					PISTONCILLO	CARRETO	SPOEL	SPOLE	
		278550A2		1	VALVE, CHECK Inc. 15 - 27	VALVOLA, DI RITEGNO	CLAPET ANTI-RETOUR	RÜCKSCHLAGVENTIL	P394
					VALVULA DE CIERRE	VALVULA CHECAGEM	INZETSTUK	KONTRAVENTIL	
15		238-6016		1	O-RING 5/8 ID x 1/16	ANELLO TOROIDALE	JOINT TORIQUE	O-RING	7176
					JUNTA HERMETICA	ANEL O	O-RING	O-RING	
16		G103862		1	RING	ANELLO	ANNEAU	RING	045A
					ANILLO	ANEL	RING	RING	
17		NSS		1	NOT SERVICED SEPARATELY Spring				
						NON FORNITO SEPARAT	NON FOURNI SEPAREMI	KEIN ERSATZTEIL	064N
					NO SE REPARA SEPARA	NOT SERVICED SEPARA	NIET ALLEEN VERKRIJG	NOT SERVICED SEPARA	
18		NSS		1	NOT SERVICED SEPARATELY Spring				
						NON FORNITO SEPARAT	NON FOURNI SEPAREMI	KEIN ERSATZTEIL	064N
					NO SE REPARA SEPARA	NOT SERVICED SEPARA	NIET ALLEEN VERKRIJG	NOT SERVICED SEPARA	
19		G108723		1	RING	ANELLO	ANNEAU	RING	045A
					ANILLO	ANEL	RING	RING	
20		238-6015		1	O-RING 9/16 ID x 1/16	ANELLO TOROIDALE	JOINT TORIQUE	O-RING	7176
					JUNTA HERMETICA	ANEL O	O-RING	O-RING	
21		NSS		1	NOT SERVICED SEPARATELY Poppet, Valve				
						NON FORNITO SEPARAT	NON FOURNI SEPAREMI	KEIN ERSATZTEIL	064N
					NO SE REPARA SEPARA	NOT SERVICED SEPARA	NIET ALLEEN VERKRIJG	NOT SERVICED SEPARA	
22		NSS		1	NOT SERVICED SEPARATELY Poppet, Valve				
						NON FORNITO SEPARAT	NON FOURNI SEPAREMI	KEIN ERSATZTEIL	064N
					NO SE REPARA SEPARA	NOT SERVICED SEPARA	NIET ALLEEN VERKRIJG	NOT SERVICED SEPARA	
23		NSS		1	NOT SERVICED SEPARATELY Body				
						NON FORNITO SEPARAT	NON FOURNI SEPAREMI	KEIN ERSATZTEIL	064N
					NO SE REPARA SEPARA	NOT SERVICED SEPARA	NIET ALLEEN VERKRIJG	NOT SERVICED SEPARA	
24		NSS		1	NOT SERVICED SEPARATELY Plug				
						NON FORNITO SEPARAT	NON FOURNI SEPAREMI	KEIN ERSATZTEIL	064N
					NO SE REPARA SEPARA	NOT SERVICED SEPARA	NIET ALLEEN VERKRIJG	NOT SERVICED SEPARA	

REMOTE HYDRAULIC CONTROL VALVE
VALVOLA DI COMANDO IDRAULICA AUSILIARIA
DISTRIBUTEUR HYDRAULIQUE DE COMMANDE À DISTANCE
HYDRAULISCHES ZUSATZSTEUERGERÄTE-VENTIL

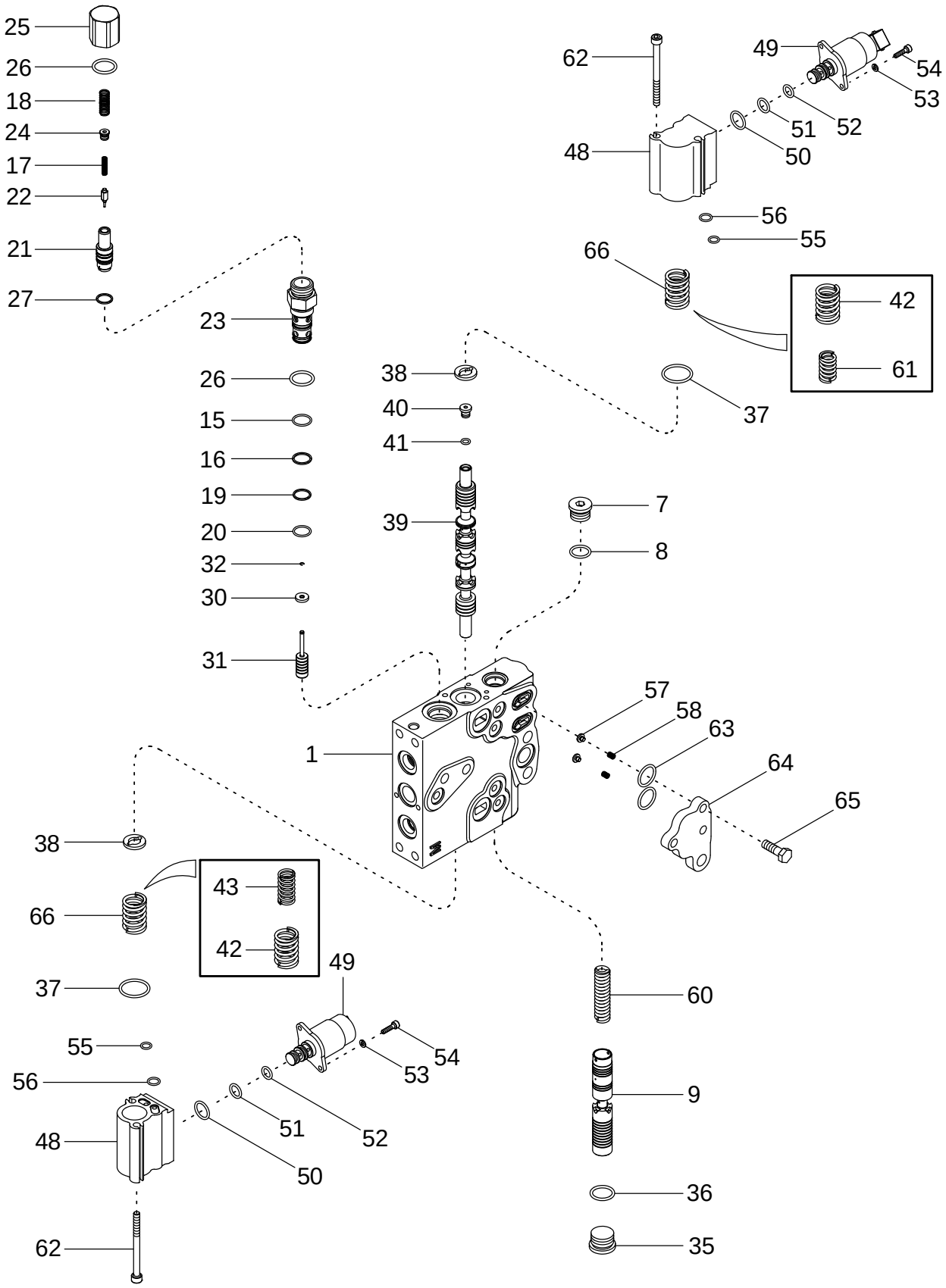

VALVULA DE CONTROL HIDRÁULICA REMOTA
VÁLVULA DE CONTROLO HIDRÁULICO REMOTA
REGELKLEP EXTERNE HYDRAULICA
HYDRAULISK FJERNSTYREVENTIL

R	N	P.N.	MOD	Q	Description Denominacion	Descrizione Denominação	Description Beschrijving	Bezeichnung Beskrivelse	L.C.
25		NSS		1	NOT SERVICED SEPARATELY Cap				
						NON FORNITO SEPARAT	NON FOURNI SEPAREMI	KEIN ERSATZTEIL	064N
					NO SE REPARA SEPARA	NOT SERVICED SEPARA	NIET ALLEEN VERKRIJG	NOT SERVICED SEPARA	
26		237-6010		2	O-RING 3/4 ID x 3/32	ANELLO TOROIDALE	JOINT TORIQUE	O-RING	7176
					JUNTA HERMETICA	ANEL O	O-RING	O-RING	
27		G108727		1	BACK-UP RING	TENUTA, TAPPET SPEC	CONTRE-JOINT	DICHTUNGSCHALTER	P658
					JUNTA	VEDADOR ESPECIAL	RING, BACK-UP	RING, BACK-UP	
		86992392		1	PISTON Inc. 30 - 32	STANTUFFO	PISTON	KOLBEN	235S
					EMBOLO	PISTAO	ZUIGER	STEMPEL	
30		NSS		1	NOT SERVICED SEPARATELY Washer				
						NON FORNITO SEPARAT	NON FOURNI SEPAREMI	KEIN ERSATZTEIL	064N
					NO SE REPARA SEPARA	NOT SERVICED SEPARA	NIET ALLEEN VERKRIJG	NOT SERVICED SEPARA	
31		NSS		1	NOT SERVICED SEPARATELY Piston				
						NON FORNITO SEPARAT	NON FOURNI SEPAREMI	KEIN ERSATZTEIL	064N
					NO SE REPARA SEPARA	NOT SERVICED SEPARA	NIET ALLEEN VERKRIJG	NOT SERVICED SEPARA	
32		NSS		1	NOT SERVICED SEPARATELY Ring, Retaining				
						NON FORNITO SEPARAT	NON FOURNI SEPAREMI	KEIN ERSATZTEIL	064N
					NO SE REPARA SEPARA	NOT SERVICED SEPARA	NIET ALLEEN VERKRIJG	NOT SERVICED SEPARA	
35		218-5211		1	PLUG 7/8 Or, Inc. 36	TAPPO	BOUCHON	STOPFEN	6400
					TAPÓN	BUJAO	PLUG	PROP	
36		237-6010		1	O-RING 3/4 ID x 3/32	ANELLO TOROIDALE	JOINT TORIQUE	O-RING	7176
					JUNTA HERMETICA	ANEL O	O-RING	O-RING	
37		238-5120		2	O-RING 1 ID x 3/32	ANELLO TOROIDALE	JOINT TORIQUE	O-RING	7176
					JUNTA HERMETICA	ANEL O	O-RING	O-RING	
38		436518A1		2	WASHER	ROSETTA PIANA	RONDELLE	BEILAGSCHEIBE	131R
					ARANDELA	ANILHA	SLUITRING	FLADSKIVE	
	1	437790A3	a	1	SPOOL Inc. 39 - 41	PISTONCINO	TIROIR	SPULE	134P
					PISTONCILLO	CARRETO	SPOEL	SPOLE	
		87416820	b	1	SPOOL Inc. 39 - 41	PISTONCINO	TIROIR	SPULE	134P
					PISTONCILLO	CARRETO	SPOEL	SPOLE	
39		NSS		1	NOT SERVICED SEPARATELY Spool				
						NON FORNITO SEPARAT	NON FOURNI SEPAREMI	KEIN ERSATZTEIL	064N
					NO SE REPARA SEPARA	NOT SERVICED SEPARA	NIET ALLEEN VERKRIJG	NOT SERVICED SEPARA	
40		218-5205		1	PLUG 5/16 Or, Inc. 41	TAPPO	BOUCHON	STOPFEN	6400
					TAPÓN	BUJAO	PLUG	PROP	
41		237-6002		1	O-RING 1/4 ID x 1/16	ANELLO TOROIDALE	JOINT TORIQUE	O-RING	7176
					JUNTA HERMETICA	ANEL O	O-RING	O-RING	
42		301969A2	a	2	SPRING	MOLLA	RESSORT	FEDER	100M
					RESORTE	MOLA	VEER	FJEDER	
43		301970A1	a	1	SPRING	MOLLA	RESSORT	FEDER	100M
					RESORTE	MOLA	VEER	FJEDER	
		367421A3		2	VALVE Inc. 48 - 56	VALVOLA	SOUPAPE	VENTIL	9620
					VALVULA	VALVULA	VALVE	VALVE	
48		NSS		1	NOT SERVICED SEPARATELY Body				
						NON FORNITO SEPARAT	NON FOURNI SEPAREMI	KEIN ERSATZTEIL	064N
					NO SE REPARA SEPARA	NOT SERVICED SEPARA	NIET ALLEEN VERKRIJG	NOT SERVICED SEPARA	

(1) Order 87416820 Spool and 87411129 Spring
(a) BSN AJB0302496
(b) ASN AJB0302496

REMOTE HYDRAULIC CONTROL VALVE
VALVOLA DI COMANDO IDRAULICA AUSILIARIA
DISTRIBUTEUR HYDRAULIQUE DE COMMANDE À DISTANCE
HYDRAULISCHES ZUSATZSTEUERGERÄTE-VENTIL

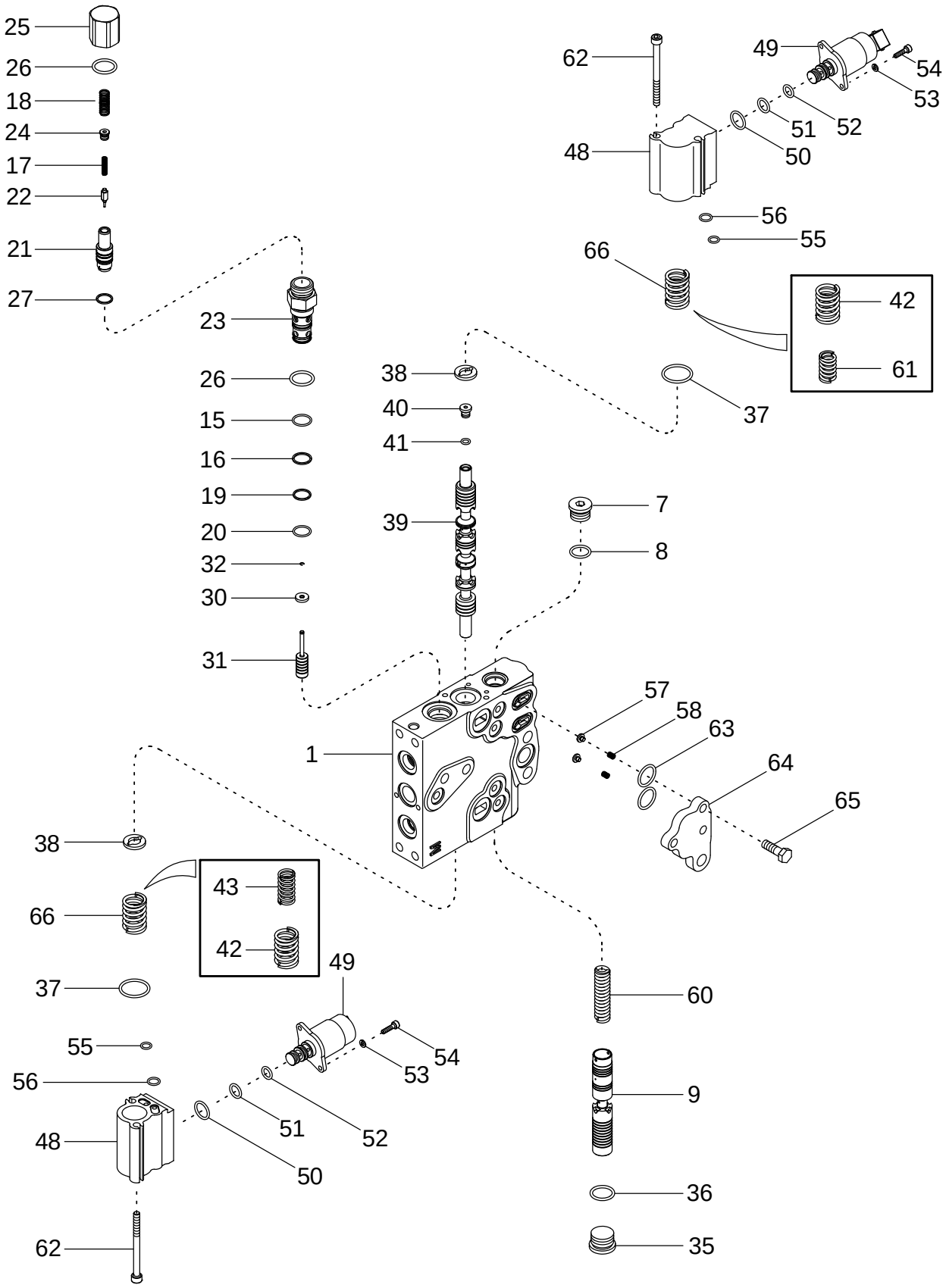

VALVULA DE CONTROL HIDRÁULICA REMOTA
VÁLVULA DE CONTROLO HIDRÁULICO REMOTA
REGELKLEP EXTERNE HYDRAULICA
HYDRAULISK FJERNSTYREVENTIL

R	N	P.N.	MOD	Q	Description Denominacion	Descrizione Denominação	Description Beschrijving	Bezeichnung Beskrivelse	L.C.
49		278506A2		1	VALVE, SOLENOID Inc. 50 - 52				
						ELETTROVALVOLA	ELECTRO-VALVE	MAGNETVENTIL	Z337
					ELECTROVÁLVULA	ELECTROVÁLVULA	STOOTLAGER	MAGNETVENTIL	
		372228A1		1	SEAL Inc. 50 - 52	ANELLO DI TENUTA	JOINT	DICHTUNG	132A
					ANILLO DE CIERRE	ANEL DE VEDACAO	DICHTINGSRING	PAKNINGSRING	
50		319721A1		1	O-RING 15,3 ID x 2,4	ANELLO TOROIDALE	JOINT THORIQUE	DICHTRING	055A
					JUNTA HERMETICA	O-RING	O-RING	O-RING	
51		319722A1		1	O-RING 10,3 ID x 2,4	ANELLO TOROIDALE	JOINT THORIQUE	DICHTRING	055A
					JUNTA HERMETICA	O-RING	O-RING	O-RING	
52		319723A1		1	O-RING 8,3 ID x 2,4	ANELLO TOROIDALE	JOINT THORIQUE	DICHTRING	055A
					JUNTA HERMETICA	O-RING	O-RING	O-RING	
53		892-11004		2	WASHER M4	ROSETTA PIANA	RONDELLE	SCHEIBE	9720
					ARANDELA	ANILHA	SLUITRING	FLADSKIVE	
54		864-4016		2	SCREW M4 x 16; 8.8	VITE	VIS	SCHRAUBE	P136
					TORNILLO	PARAFUSO	SCHROEF	SKRUE	
55		238-5011		1	O-RING 5/16 ID x 1/16	ANELLO TOROIDALE	JOINT THORIQUE	DICHTRING	055A
					JUNTA HERMETICA	O-RING	O-RING	O-RING	
56		238-5012		1	O-RING 3/8 ID x 1/16	ANELLO TOROIDALE	JOINT TORIQUE	O-RING	7176
					JUNTA HERMETICA	ANEL O	O-RING	O-RING	
		86994122		1	POPPET Inc. 57, 58	VALVOLA A FUNGO	VALVE A CLAPET	KEGELVENTIL	012V
					POPPET	POPPET	POPPET	POPNITTE	
57		446404A1		1	PLUG	TAPPO	BOUCHON	STOPFEN	050T
					TAPÓN	BUJÃO	PLUG	PROP	
58		446405A1		1	SPRING	MOLLA	RESSORT	FEDER	100M
					RESORTE	MOLA	VEER	FJEDER	
60		436854A1		1	SPRING	MOLLA	RESSORT	FEDER	100M
					RESORTE	MOLA	VEER	FJEDER	
61		321689A1	a	1	SPRING	MOLLA	RESSORT	FEDER	100M
					RESORTE	MOLA	VEER	FJEDER	
62		864-6075		2	SCREW M6 x 75; 8.8	VITE	VIS	SCHRAUBE	7450
					TORNILLO	PARAFUSO	SCHROEF	SKRUE	
63		238-6116		2	O-RING 3/4 ID x 3/32	ANELLO TOROIDALE	JOINT TORIQUE	O-RING	7176
					JUNTA HERMETICA	ANEL O	O-RING	O-RING	
64		87408510		1	PLATE	PIASTRA	PLAQUE	PLATTE	105P
					PLACA	CHAPA	PLAAT	PLADE	
65		628-8025		3	SCREW M8 x 25; 10.9	VITE	VIS	SCHRAUBE	7450
					TORNILLO	PARAFUSO	SCHROEF	SKRUE	
66		87411129	b	2	SPRING	MOLLA	RESSORT	FEDER	100M
					RESORTE	MOLA	VEER	FJEDER	

(a) BSN AJB0302496
(b) ASN AJB0302496

08-21		p1	11/04

HITCH VALVE ASSEMBLY
SENSORE DELLA VALVOLA DELL'ATTACCO
DISTRIBUTEUR D'ATTELAGE
ZUSAMMENBAU DES KRAFTHEBER-STEUERGERÄTS

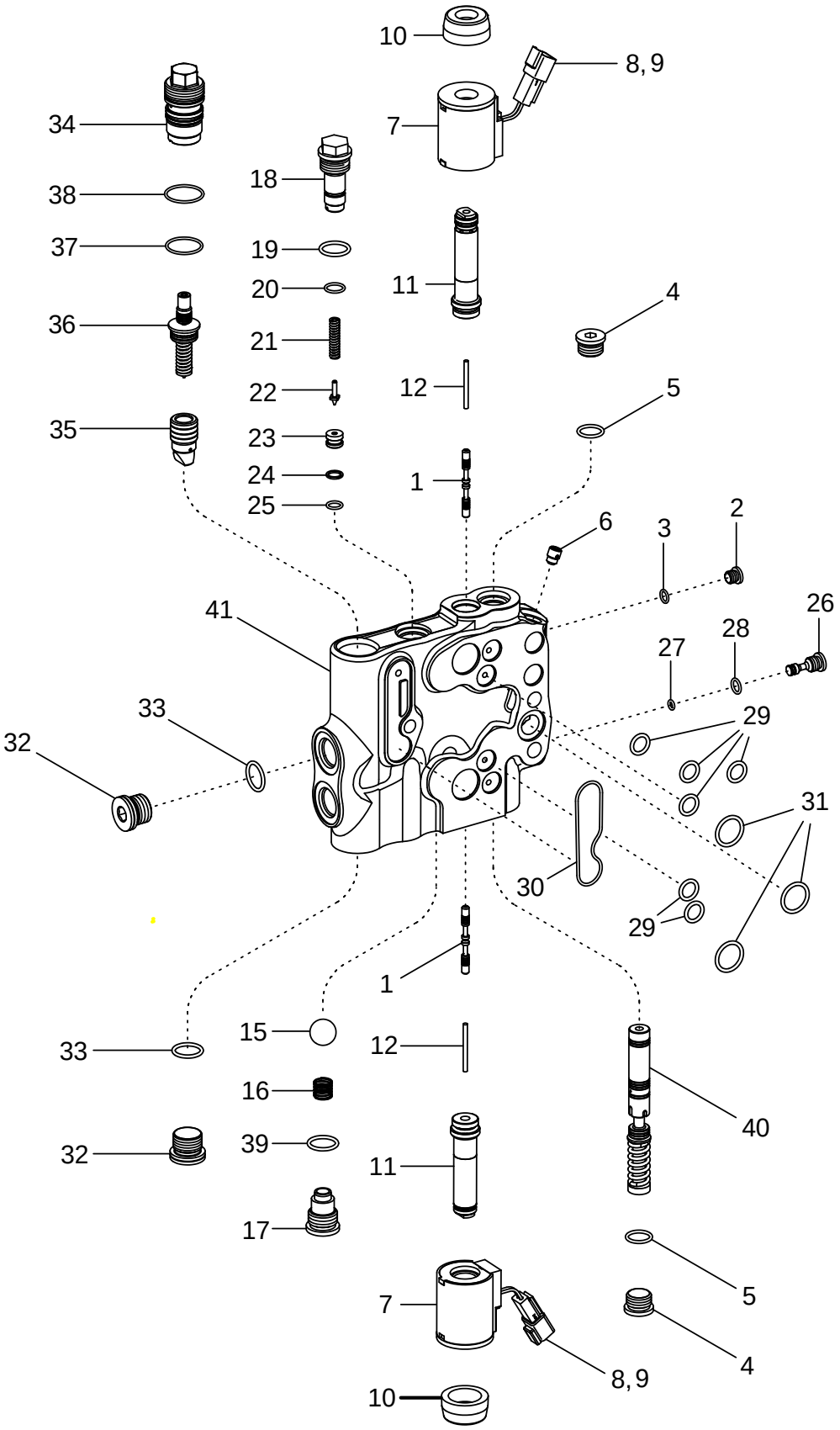

CONJUNTO DE LA VÁLVULA DEL ENGANCHE
CONJUNTO DA VÁLVULA DO ENGATE
KLEPCONSTRUCTIE HEFINRICHTING
TRÆKVENTILSAMLING

R	N	P.N.	MOD	Q	Description Denominacion	Descrizione Denominação	Description Beschrijving	Bezeichnung Beskrivelse	L.C.
	1	**412509A2**		1	VALVE Hitch, Inc. 1 - 41 VALVULA	VALVOLA VALVULA	SOUPAPE VALVE	VENTIL VALVE	9620
		412509A3	a	1	VALVE Hitch, Inc. 1 - 41 VALVULA	VALVOLA VALVULA	VALVE VALVE	VENTIL VALVE	P468
		412509A4	b	1	VALVE Hitch, Inc. 1 - 41 VALVULA	VALVOLA VALVULA	VALVE VALVE	VENTIL VALVE	P468
1		**188104A1**		2	SPOOL PISTONCILLO	PISTONCINO CARRETO	TIROIR SPOEL	SPULE SPOLE	134P
2		**218-5206**		1	PLUG 3/8 Or, Inc.3 TAPÓN	TAPPO BUJAO	BOUCHON PLUG	STOPFEN PROP	6400
3		**237-6003**		1	O-RING 5/16 ID x 1/16 JUNTA HERMETICA	ANELLO TOROIDALE ANEL O	JOINT TORIQUE O-RING	O-RING O-RING	7176
4		**218-5210**		2	PLUG 3/4 Or, Inc. 5 TAPÓN	TAPPO BUJAO	BOUCHON PLUG	STOPFEN PROP	6400
5		**237-6008**		1	O-RING 41/64 ID x 3/32 JUNTA HERMETICA	ANELLO TOROIDALE O-RING	JOINT THORIQUE O-RING	DICHTRING O-RING	055A
6		**373758A1**		1	VALVE VALVULA	VALVOLA VALVULA	SOUPAPE VALVE	VENTIL VALVE	9620
		243254A1		2	KIT Inc. 7 - 9 EQUIPO	CORREDO KIT	KIT KIT	SATZ UDSTYR	305C
7		**188105A1**		1	SOLENOID SOLENOIDE	SOLENOIDE SOLEMOID	SOLENOIDE SOLENOIDE	MAGNETSPULE, MECH. MAGNETVENTIL	168S
8		**225318C1**		1	WEDGE CUNA	CUNEE CORTE DE TECIDO	CALE DE BLOCAGE WEDGE	UNTERLEGEKEIL KILE	9730
9		**225315C1**		1	CONNECTOR CONECTOR	CONNESSIONE CONECTOR	CONNECTEUR VERBINDING	STECKVERBINDUNG ELI STIK	235C
10		**188106A1**		2	NUT TUERCA	DADO PORCA	ECROU MOER	MUTTER MØTRIK	010D
11		**188117A1**		2	TUBE TUBO	TUBETTO TUBO	TUBE BUISJE	SCHLAUCH RØR	195T
12		**188116A1**		2	PIN PERNO	PERNO PERNO	AXE PEN	BOLZEN STIFT	080P
15		**511-10200**		1	BALL BOLA	SFERA ESFERA	BILLE KOGEL	KUGEL KUGLE	0460
	2	**87423671**		1	KIT, SPRING Inc. 16, 17 and 39 JUEGO MUELLES	KIT, MOLLA JOGO DE MOLAS	JEU DE RESSORTS KIT, SPRING	FEDERNSATZ VÆRKTØJSFJEDER	Z250
16	3	**188114A1**		1	SPRING RESORTE	MOLLA MOLA	RESSORT VEER	FEDER FJEDER	100M
16	2	**NSS**		1	NOT SERVICED SEPARATELY NO SE REPARA SEPARA	NON FORNITO SEPARAT NOT SERVICED SEPARA	NON FOURNI SEPAREMI NIET ALLEEN VERKRIJG	KEIN ERSATZTEIL NOT SERVICED SEPARA	064N
17	3	**373760A1**		1	PLUG TAPÓN	TAPPO BUJÃO	BOUCHON PLUG	STOPFEN PROP	050T

(1) Order 412509A4 Valve
(2) Used with 412509A3 and 412509A4 Valves
(3) Used with 412509A2 Valve
(a) BSN AJB0303604
(b) ASN AJB0303604

08-21		p2	11/04

HITCH VALVE ASSEMBLY
SENSORE DELLA VALVOLA DELL'ATTACCO
DISTRIBUTEUR D'ATTELAGE
ZUSAMMENBAU DES KRAFTHEBER-STEUERGERÄTS

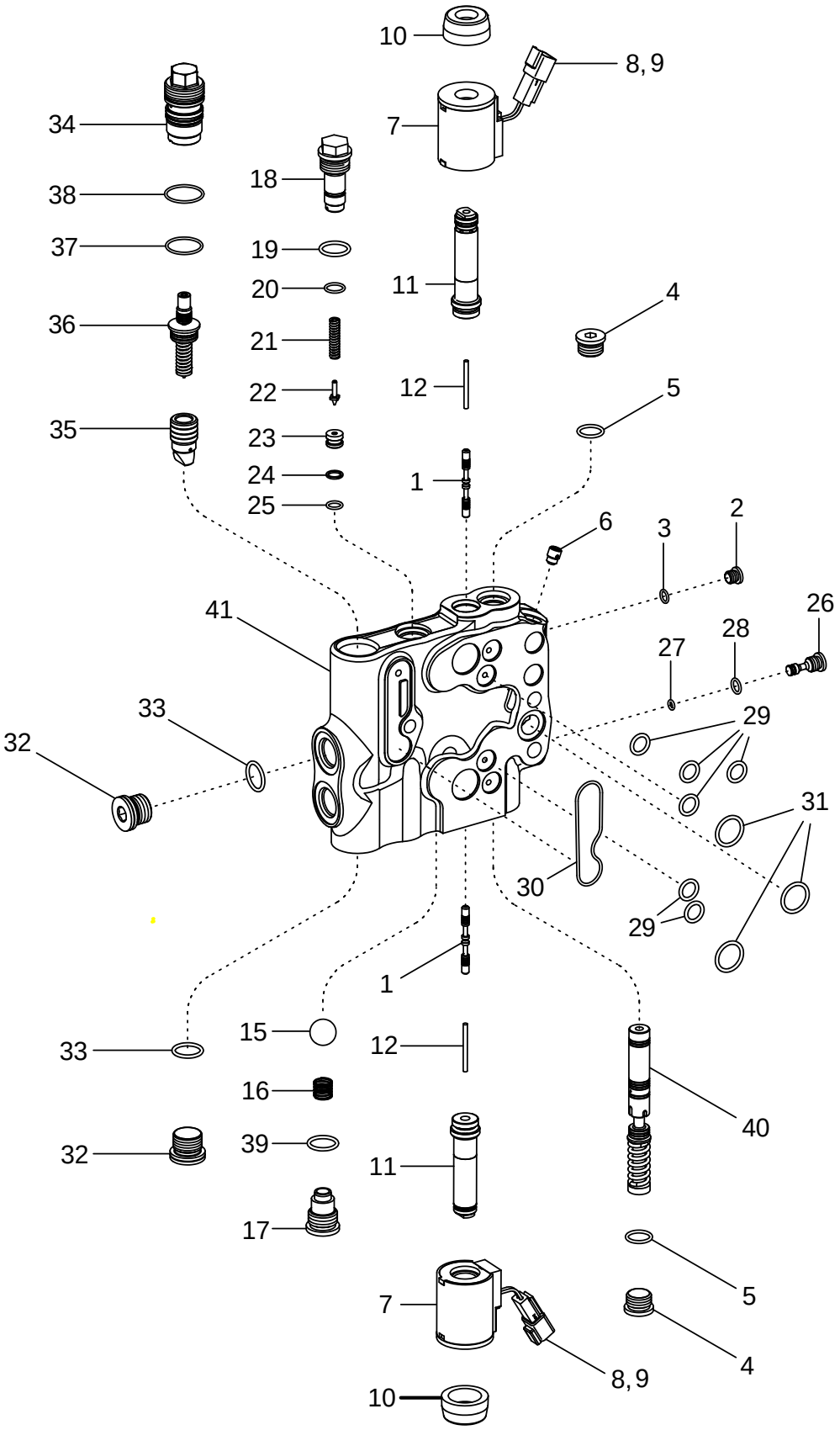

CONJUNTO DE LA VÁLVULA DEL ENGANCHE
CONJUNTO DA VÁLVULA DO ENGATE
KLEPCONSTRUCTIE HEFINRICHTING
TRÆKVENTILSAMLING

R	N	P.N.	MOD	Q	Description Denominacion	Descrizione Denominação	Description Beschrijving	Bezeichnung Beskrivelse	L.C.
17	1	NSS		1	NOT SERVICED SEPARATELY				
						NON FORNITO SEPARAT	NON FOURNI SEPAREMI	KEIN ERSATZTEIL	064N
					NO SE REPARA SEPARA	NOT SERVICED SEPARA	NIET ALLEEN VERKRIJG	NOT SERVICED SEPARA	
		373756A1		1	KIT Inc. 18 - 25	KIT	POCHETTE	PACKUNG	4830
					JEUGO	JOGO	KIT	KIT	
18		NSS		1	NOT SERVICED SEPARATELY Plug, Relief				
						NON FORNITO SEPARAT	NON FOURNI SEPAREMI	KEIN ERSATZTEIL	064N
					NO SE REPARA SEPARA	NOT SERVICED SEPARA	NIET ALLEEN VERKRIJG	NOT SERVICED SEPARA	
19		237-6010		1	O-RING 3/4 ID x 3/32	ANELLO TOROIDALE	JOINT TORIQUE	O-RING	7176
					JUNTA HERMETICA	ANEL O	O-RING	O-RING	
20		238-5014		1	O-RING 1/2 ID x 1/16	ANELLO TOROIDALE	JOINT TORIQUE	O-RING	7176
					JUNTA HERMETICA	ANEL O	O-RING	O-RING	
21		NSS		1	NOT SERVICED SEPARATELY Spring				
						NON FORNITO SEPARAT	NON FOURNI SEPAREMI	KEIN ERSATZTEIL	064N
					NO SE REPARA SEPARA	NOT SERVICED SEPARA	NIET ALLEEN VERKRIJG	NOT SERVICED SEPARA	
22		NSS		1	NOT SERVICED SEPARATELY Poppet				
						NON FORNITO SEPARAT	NON FOURNI SEPAREMI	KEIN ERSATZTEIL	064N
					NO SE REPARA SEPARA	NOT SERVICED SEPARA	NIET ALLEEN VERKRIJG	NOT SERVICED SEPARA	
23		NSS		1	NOT SERVICED SEPARATELY Seat				
						NON FORNITO SEPARAT	NON FOURNI SEPAREMI	KEIN ERSATZTEIL	064N
					NO SE REPARA SEPARA	NOT SERVICED SEPARA	NIET ALLEEN VERKRIJG	NOT SERVICED SEPARA	
24		NSS		1	NOT SERVICED SEPARATELY Ring				
						NON FORNITO SEPARAT	NON FOURNI SEPAREMI	KEIN ERSATZTEIL	064N
					NO SE REPARA SEPARA	NOT SERVICED SEPARA	NIET ALLEEN VERKRIJG	NOT SERVICED SEPARA	
25		238-6011		1	O-RING 5/16 ID x 1/16	ANELLO TOROIDALE	JOINT TORIQUE	O-RING	7176
					JUNTA HERMETICA	ANEL O	O-RING	O-RING	
26		373761A1		1	PLUG	TAPPO	BOUCHON	STOPFEN	050T
					TAPÓN	BUJÃO	PLUG	PROP	
27		238-6008		1	O-RING 3/16 ID x 1/16	ANELLO TOROIDALE	JOINT TORIQUE	O-RING	7176
					JUNTA HERMETICA	ANEL O	O-RING	O-RING	
28		237-6004		1	O-RING 23/64 ID x 5/64	ANELLO TOROIDALE	JOINT TORIQUE	O-RING	7176
					JUNTA HERMETICA	ANEL O	O-RING	O-RING	
29		238-6112		6	O-RING 1/2 ID x 3/32	ANELLO TOROIDALE	JOINT TORIQUE	O-RING	7176
					JUNTA HERMETICA	ANEL O	O-RING	O-RING	
30		238-5142		1	O-RING 2-3/8 ID x 3/32	ANELLO TOROIDALE	JOINT TORIQUE	O-RING	7176
					JUNTA HERMETICA	ANEL O	O-RING	O-RING	
31		238-6117		3	O-RING 13/16 ID x 3/32	ANELLO TOROIDALE	JOINT TORIQUE	O-RING	7176
					JUNTA HERMETICA	ANEL O	O-RING	O-RING	
32		221579A1		2	PLUG M22, Inc.33	TAPPO	BOUCHON	STOPFEN	050T
					TAPÓN	BUJÃO	PLUG	PROP	
33		637-63193		1	O-RING 91,3 ID x 2,2	ANELLO TOROIDALE	JOINT TORIQUE	O-RING	7176
					JUNTA HERMETICA	ANEL O	O-RING	O-RING	
		243256A1	a	1	KIT, SERVICE Inc. 34 - 38	KIT ASSISTENZIALE	KIT ASSISTANCE	WARTUNGSSATZ	021K
					KIT, SERVICE	KIT, SERVICE	KIT, SERVICE	SERVICE SAET	
		87430152	b	1	PACKAGE Inc. 34, 36 - 38	CONFEZIONE	COLIS	PACKUNG	5920
					PAQUETE	PACOTE	PACKAGE	PAKNING	

(1) Used with 412509A3 and 412509A4 Valves
(a) BSN AJB0303604
(b) ASN AJB0303604

HITCH VALVE ASSEMBLY
SENSORE DELLA VALVOLA DELL'ATTACCO
DISTRIBUTEUR D'ATTELAGE
ZUSAMMENBAU DES KRAFTHEBER-STEUERGERÄTS

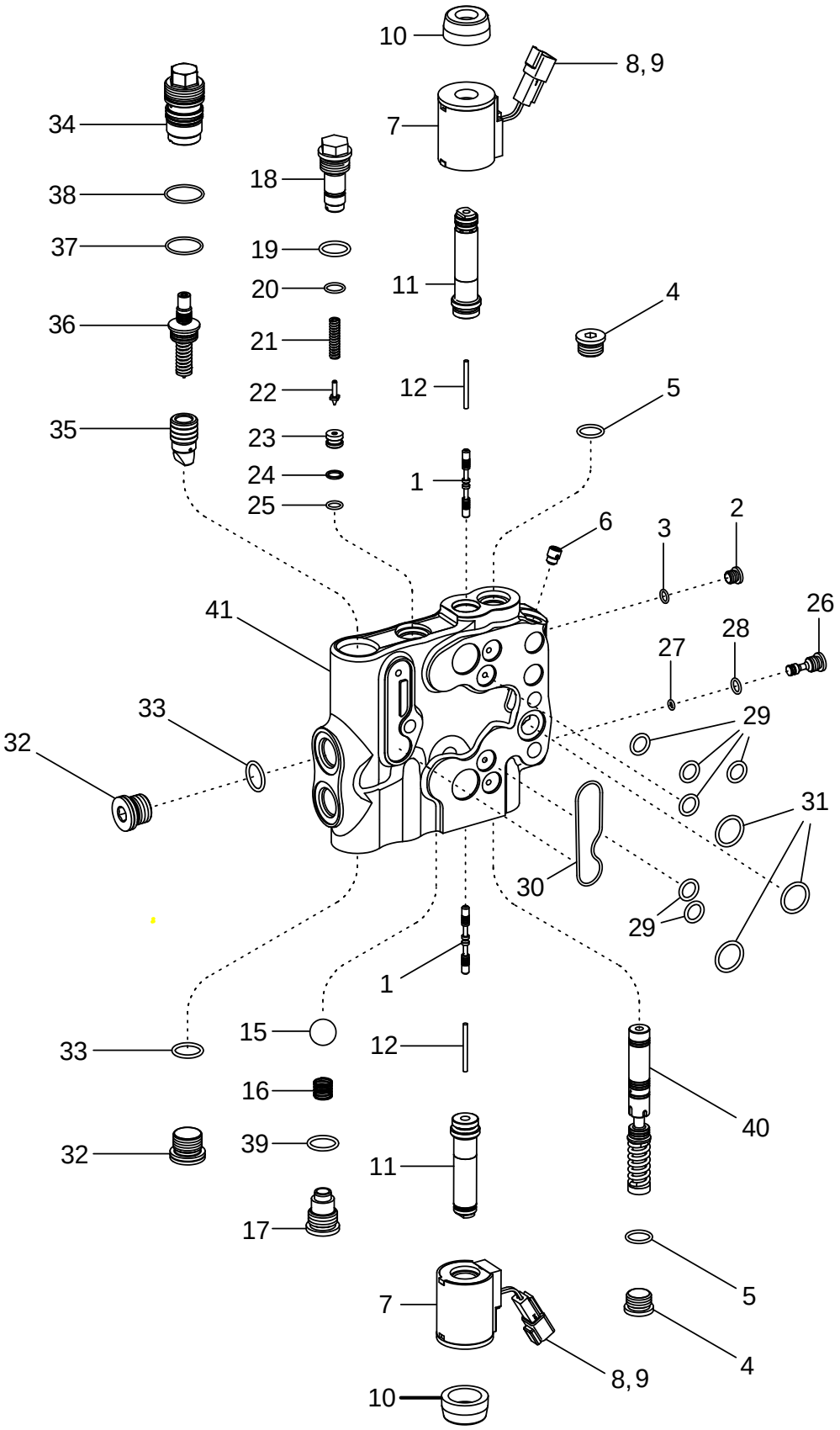

CONJUNTO DE LA VÁLVULA DEL ENGANCHE
CONJUNTO DA VÁLVULA DO ENGATE
KLEPCONSTRUCTIE HEFINRICHTING
TRÆKVENTILSAMLING

R	N	P.N.	MOD	Q	Description Denominacion	Descrizione Denominação	Description Beschrijving	Bezeichnung Beskrivelse	L.C.
34		NSS		1	NOT SERVICED SEPARATELY Tube				
						NON FORNITO SEPARAT	NON FOURNI SEPAREMI	KEIN ERSATZTEIL	064N
					NO SE REPARA SEPARA	NOT SERVICED SEPARA	NIET ALLEEN VERKRIJG	NOT SERVICED SEPARA	
35		NSS		1	NOT SERVICED SEPARATELY Poppet Valve				
						NON FORNITO SEPARAT	NON FOURNI SEPAREMI	KEIN ERSATZTEIL	064N
					NO SE REPARA SEPARA	NOT SERVICED SEPARA	NIET ALLEEN VERKRIJG	NOT SERVICED SEPARA	
36		NSS		1	NOT SERVICED SEPARATELY Stem, Servo				
						NON FORNITO SEPARAT	NON FOURNI SEPAREMI	KEIN ERSATZTEIL	064N
					NO SE REPARA SEPARA	NOT SERVICED SEPARA	NIET ALLEEN VERKRIJG	NOT SERVICED SEPARA	
37		238-5022		1	O-RING 1 ID x 1/16	ANELLO TOROIDALE	JOINT TORIQUE	O-RING	7176
					JUNTA HERMETICA	ANEL O	O-RING	O-RING	
38		238-5023		1	O-RING 1-1/16 ID x 1/16	ANELLO TOROIDALE	JOINT TORIQUE	O-RING	7176
					JUNTA HERMETICA	ANEL O	O-RING	O-RING	
39		237-6010		1	O-RING 3/4 ID x 3/32	ANELLO TOROIDALE	JOINT TORIQUE	O-RING	7176
					JUNTA HERMETICA	ANEL O	O-RING	O-RING	
40		NSS		1	NOT SERVICED SEPARATELY Spool				
						NON FORNITO SEPARAT	NON FOURNI SEPAREMI	KEIN ERSATZTEIL	064N
					NO SE REPARA SEPARA	NOT SERVICED SEPARA	NIET ALLEEN VERKRIJG	NOT SERVICED SEPARA	
41		NSS		1	NOT SERVICED SEPARATELY Body				
						NON FORNITO SEPARAT	NON FOURNI SEPAREMI	KEIN ERSATZTEIL	064N
					NO SE REPARA SEPARA	NOT SERVICED SEPARA	NIET ALLEEN VERKRIJG	NOT SERVICED SEPARA	
		373757A1		1	KIT Seal, Inc. 3, 5, 19, 20, 24, 25, 27 - 31, 37, 38, 39				
						CORREDO	KIT	SATZ	305C
					EQUIPO	KIT	KIT	UDSTYR	

08-22		p1	11/04

REMOTE HYDRAULIC COUPLING MOUNTING
SUPPORTO DEL GIUNTO DI ACCOPPIAMENTO DELLE VALVOLE AUSILIARIE
MONTAGE DU COUPLEUR HYDRAULIQUE À DISTANCE
BEFESTIGUNG FÜR ZUSATZSTEUERGERÄTE-KUPPLUNG

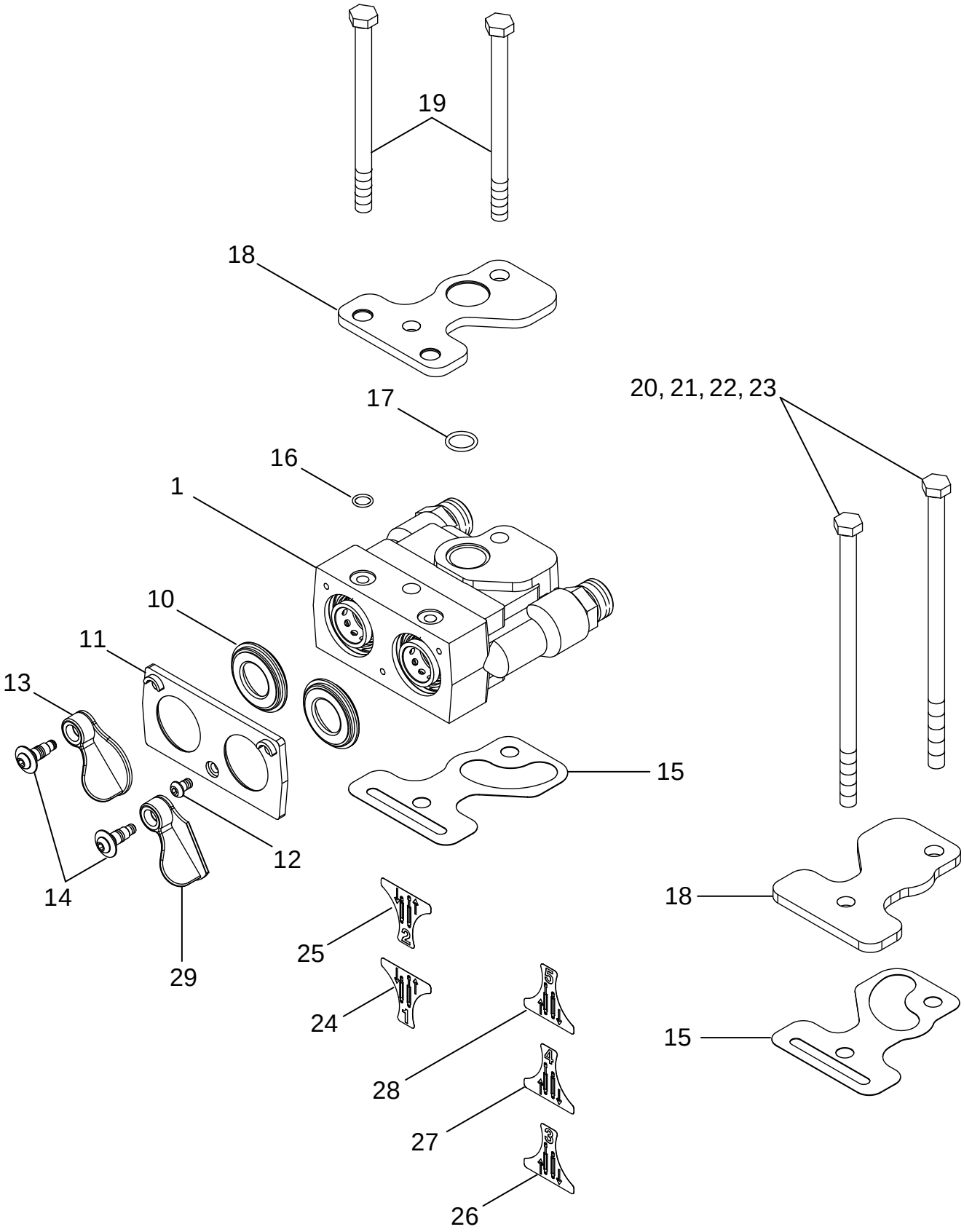

SOPORTE PARA ACOPLAMIENTO HIDRÁULICO REMOTO
SUPORTE DE ACOPLAMENTO HIDRÁULICO REMOTO
BEVESTIGINGSSTUK KOPPELSTUK EXTERNE HYDRAULICA
EKSTERN HYDRAULIKKOBLINGSMONTAGE

R	N	P.N.	MOD	Q	Description Denominacion	Descrizione Denominação	Description Beschrijving	Bezeichnung Beskrivelse	L.C.
1	1	275182A2		AR	COUPLING, PUSH-PULL ACOPLAMIENTO RÁPID(	ATTACCO,CONTROFASE ACOPLAMENTO RÁPIDO	ACCOUPLEMENT RAP. COUPLING, PUSH-PULL	ABREISSKUPPLUNG SKUB/TRÆK KOBLING	P890
10		240969A1		AR	SEAL ANILLO DE CIERRE	ANELLO DI TENUTA ANEL DE VEDACAO	JOINT DICHTINGSRING	DICHTUNG PAKNINGSRING	132A
11		240971A2		1AR	PLATE PLACA	PIASTRA CHAPA	PLAQUE PLAAT	PLATTE PLADE	105P
12		240970A2		AR	SCREW TORNILLO	VITE PARAFUSO	VIS SCHROEF	SCHRAUBE SKRUE	040V
13		240974A2		AR	COVER, DOOR TAPADO	COPERCHIO, PORTA TAMPA PORTA	CACHE COVER, DOOR	TÜRVERKLEIDUNG DØRDÆKSEL	P785
14		240973A2		AR	SCREW TORNILLO	VITE PARAFUSO	VIS SCHROEF	SCHRAUBE SKRUE	040V
15		253660A2		2	GASKET JUNTA HERMETICA	GUARNIZIONE JUNTA	JOINT DICHTINGSSTUK	DICHTUNG, FLACH PAKNING	123G
16		238-6014		AR	O-RING 1/2 ID x 1/16 JUNTA HERMETICA	ANELLO TOROIDALE ANEL O	JOINT TORIQUE O-RING	O-RING O-RING	7176
17		238-6021		AR	O-RING 15/16 ID x 1/16 JUNTA HERMETICA	ANELLO TOROIDALE ANEL O	JOINT TORIQUE O-RING	O-RING O-RING	7176
18		258671A2		2	PLATE PLACA	PIASTRA CHAPA	PLAQUE PLAAT	PLATTE PLADE	105P
19		814-10140		2	SCREW M10 x 140 TORNILLO	VITE PARAFUSO	VIS SCHROEF	SCHRAUBE SKRUE	P136
21		814-10085		2	SCREW M10 x 85, 3 Circuits TORNILLO	VITE PARAFUSO	VIS SCHROEF	SCHRAUBE SKRUE	7450
22		814-10140		2	SCREW M10 x 140, 4 Circuits TORNILLO	VITE PARAFUSO	VIS SCHROEF	SCHRAUBE SKRUE	P136
23		814-10205		2	SCREW M10 x 205, 5 Circuits TORNILLO	VITE PARAFUSO	VIS SCHROEF	SCHRAUBE SKRUE	7450
24		284327A1		1	DECAL Coupler 1 CALCOMANIA	DECALCOMANIA DECALCOMANIA	DECALCOMANIE DECAL	ABZIEHBILD TRANSFER	P903
25		284328A1		1	DECAL Coupler 2 CALCOMANIA	DECALCOMANIA DECALCOMANIA	DECALCOMANIE DECAL	ABZIEHBILD TRANSFER	P903
26		284329A1		1	DECAL Coupler 3 CALCOMANIA	DECALCOMANIA DECALCOMANIA	DECALCOMANIE DECAL	ABZIEHBILD TRANSFER	P903
27		284330A1		1	DECAL Coupler 4 CALCOMANIA	DECALCOMANIA DECALCOMANIA	DECALCOMANIE DECAL	ABZIEHBILD TRANSFER	012D
28		284331A1		1	DECAL Coupler 5 CALCOMANIA	DECALCOMANIA DECALCOMANIA	DECALCOMANIE DECAL	ABZIEHBILD TRANSFER	012D
29		387611A1		AR	DUST CAP CAPUCHON GUARDA-P(	CAPPUCCIO PARAPOLV RESGUARDO DE PO	CACHE-POUSSIERE STOFKAP	STAUBSCHUTZKAPPE STOEVHAETTE	066C

(1) See Figure 08-23

08-23		p1	11/04

REMOTE HYDRAULIC COUPLINGS
GIUNTI DI ACCOPPIAMENTO IDRAULICI AUSILIARI
COUPLEURS HYDRAULIQUES À DISTANCE
ZUSATZSTEUERGERÄTE-HYDRAULIKKUPPLUNGEN

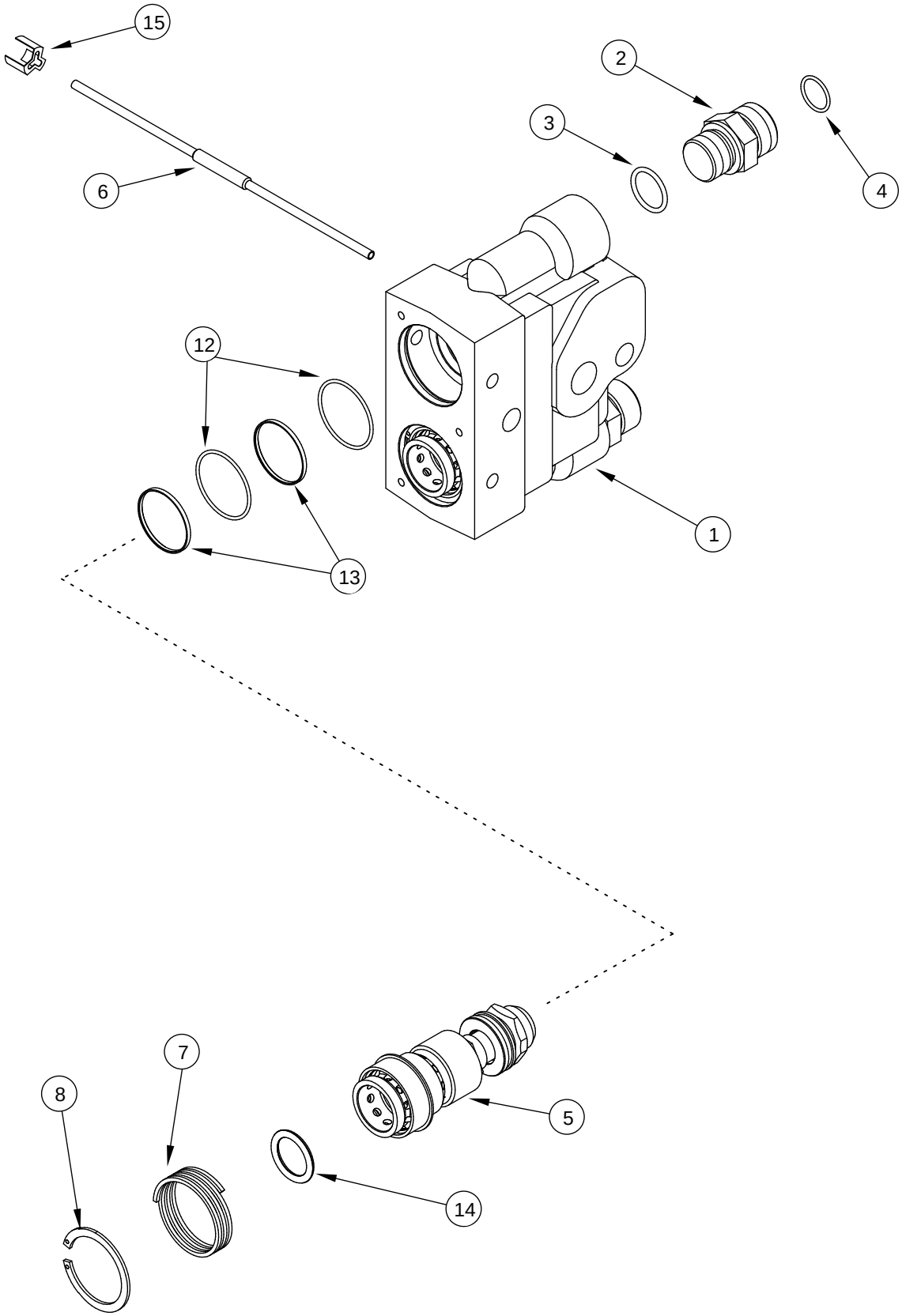

ACOPLADORES HIDRÁULICOS REMOTOS
ACOPLAMENTOS HIDRÁULICOS REMOTOS
KOPPELSTUKKEN EXTERNE HYDRAULICA
HYDRAULISKE FJERNSAMMENKOBLINGER

R	N	P.N.	MOD	Q	Description Denominacion	Descrizione Denominação	Description Beschrijving	Bezeichnung Beskrivelse	L.C.
		275182A2		AR	COUPLING, PUSH-PULL Inc.1 - 14				
						ATTACCO,CONTROFASE	ACCOUPLEMENT RAP.	ABREISSKUPPLUNG	P890
					ACOPLAMIENTO RÁPIDO	ACOPLAMENTO RÁPIDO	COUPLING, PUSH-PULL	SKUB/TRÆK KOBLING	
1		NSS		1	NOT SERVICED SEPARATELY Body				
						NON FORNITO SEPARAT	NON FOURNI SEPAREMI	KEIN ERSATZTEIL	064N
					NO SE REPARA SEPARA	NOT SERVICED SEPARA	NIET ALLEEN VERKRIJG	NOT SERVICED SEPARA	
2		700-103		2	CONNECTOR, HYD. 1 fc sl x 22 Or, Inc. 3, 4				
						RACCORDO IDRAULICO	RACCORD	STUTZEN	020R
					RACOR	CONECTOR	VERBINDING	FORSKRUNING	
3		637-63193		1	O-RING 19,3 ID x 2,2	ANELLO TOROIDALE	JOINT TORIQUE	O-RING	7176
					JUNTA HERMETICA	ANEL O	O-RING	O-RING	
4		238-6016		1	O-RING 5/8 ID x 1/16	ANELLO TOROIDALE	JOINT TORIQUE	O-RING	7176
					JUNTA HERMETICA	ANEL O	O-RING	O-RING	
5		321623A1		2	CARTRIDGE	CARTUCCIA	CARTOUCHE	PATRONE	P016
					CARTUCHO	CARTUCHO	CARTRIDGE	INDSATS	
6		93329C2		1	SPRING	MOLLA	RESSORT	FEDER	100M
					RESORTE	MOLA	VEER	FJEDER	
7		93330C1		2	SPRING, VALVE	MOLLA, VALVOLA	RESSORT, SOUPAPE	VENTILFEDER	P463
					MUELLE, VALVULA	MUELLE, VÁLVULA	SPRING, VALVE	VENTILFJEDER	
8		100-28162		2	SNAP RING No. 162	ANELLO ELASTICO	ANNEAU-D'ARRET	SICHERUNGSRING	P345
					ANILLO DE CIERRE	ANEL TRAVA	SNAP RING	SNAP RING	
		345193A1		1	KIT, SEALS Inc. 12 - 14	SERIE GUARNIZIONI	POCHETTE DE JOINTS	DICHTUNGSSATZ	630S
					SERIE DE JUNTAS	CONJUNTO DE JUNTAS	DICHTINGSKIT	PAKNINGSSAET	
12		238-5027		4	O-RING 1-5/16 ID x 1/16	ANELLO TOROIDALE	JOINT TORIQUE	O-RING	7176
					JUNTA HERMETICA	ANEL O	O-RING	O-RING	
13		93332C1		4	SEAL ASSY.	GRUPPO TENUTA	JOINT-D'ETANCH. ASS.	DICHTRING (KPLT.)	P558
					SELLO (CONJUNTO)	VEDADOR CONJUNTO	SEAL ASSY.	SEAL ASSY.	
14		NSS		2	NOT SERVICED SEPARATELY O-Ring				
						NON FORNITO SEPARAT	NON FOURNI SEPAREMI	KEIN ERSATZTEIL	064N
					NO SE REPARA SEPARA	NOT SERVICED SEPARA	NIET ALLEEN VERKRIJG	NOT SERVICED SEPARA	
15		361880A1		1	RETAINER	RITEGNO	RETENEUR	HALTEVORRICHTUNG	109R
					RETENEDOR	RETENTOR	HOUDER	HOLDER	

08-24		p1	11/04

CYLINDER ASSEMBLY - HITCH (305022A2)
GRUPPO DEL CILINDRO - ATTACCO (305022A2)
VÉRIN D'ATTELAGE (305022A2)
KRAFTHEBERZYLINDER (305022A2)

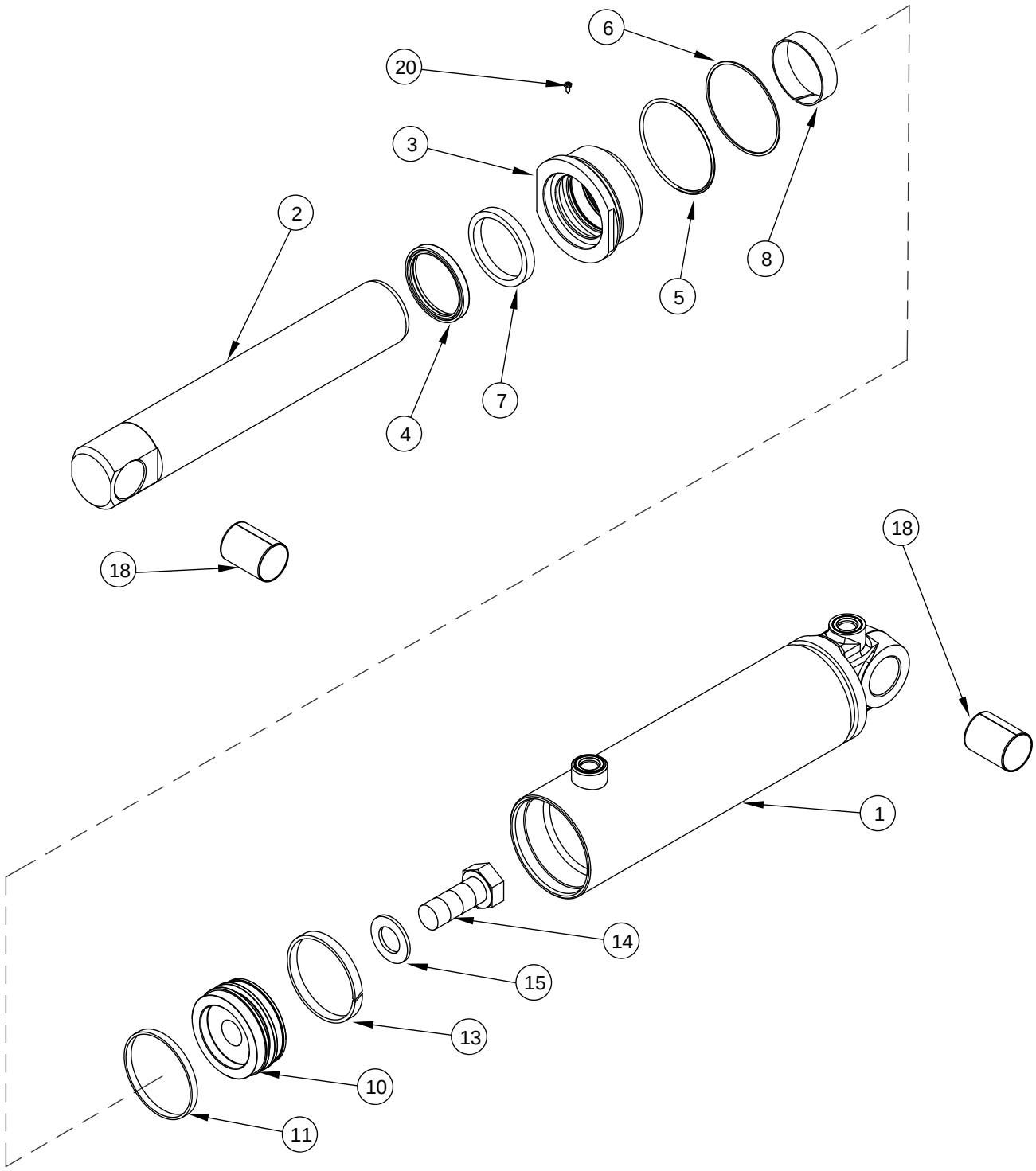

CONJUNTO DEL CILINDRO - ENGANCHE (305022A2)
CONJUNTO DO CILINDRO - ENGATE (305022A2)
CILINDERCONSTRUCTIE - HEFINRICHTING (305022A2)
CYLINDERSAMLING - TRÆK (305022A2)

R	N	P.N.	MOD	Q	Description Denominacion	Descrizione Denominação	Description Beschrijving	Bezeichnung Beskrivelse	L.C.
		305002A2		1	CYLINDER 89 ID x 260 mm strk, Part Number Stamped On Cylinder, Inc. 1 - 18				
						CILINDRO	VERIN	ZYLINDER	164C
					CILINDRO	CILINDRO	CYLINDER	CYLINDER	
1		**305003A2**		1	CYLINDER	CILINDRO	VERIN	ZYLINDER	164C
					CILINDRO	CILINDRO	CYLINDER	CYLINDER	
2		**303880A1**		1	ROD, PISTON	ASTA DEL PISTONE	TIGE DE VERIN	KOLBENSTANGE	Z093
					VASTAGO CILINDRO	HASTE CILINDRO	STAAK	PLEJLSTANG	
3		**305008A1**		1	CAP CYLINDER END	CUSCIN.,GHIANDOLA	PALIER DE VERIN	ZYLINDERKAPPE	Z364
					PALIER	TAMPA CILINDRO	CAP CYLINDER END	CAP CYLINDER END	
4		**D95146**		1	WIPER	TERGICRISTALLO	RACLEUR BALAIS	WISCHER	9860
					LIMPIADOR	LIMPADOR	INZETSTUK	VISKER	
5		**238-5237**		1	O-RING 3-3/8 ID x 1/8	ANELLO TOROIDALE	JOINT TORIQUE	O-RING	7176
					JUNTA HERMETICA	ANEL O	O-RING	O-RING	
6		**G32126**		1	RING	ANELLO	ANNEAU	RING	045A
					ANILLO	ANEL	RING	RING	
7		**G109228**		1	SEAL	ANELLO DI TENUTA	JOINT	DICHTUNG	132A
					ANILLO DE CIERRE	ANEL DE VEDACAO	DICHTINGSRING	PAKNINGSRING	
8		**258960A1**		1	BEARING	CUSCINETTO USURA	PALIER	SPINDELLAGER	P440
					COJINETE	ROLAMENTO	BEARING	BEARING	
10		**305010A1**		1	JACK PISTON	PISTONE, CILINDRO	PISTON-DE-VERIN	HUBZYLINDERKOLBEN	Z586
					PISTON CILINDRO	PISTAO DO CILINDRO	JACK PISTON	JACK PISTON	
11		**378919A1**		1	SEAL	ANELLO DI TENUTA	JOINT	DICHTUNG	132A
					ANILLO DE CIERRE	ANEL DE VEDACAO	DICHTINGSRING	PAKNINGSRING	
13		**G100711**		1	RING, WEAR	ANELLO ANTIUSURA	BAGUE D"USURE	VERSCHLEISSRING	A012
					ANILLO DE DESGASTE	ANILLO DE DESGASTE	SLIJRING	SLIDRING	
14		**25974R1**		1	BOLT 1 NF x 2-1/2; 8	BULLONE	BOULON	SCHAUBENBOLZEN	140B
					TORNILLO	PARAFUSO	BOUT	SKRUE	
15		**G32303**		1	WASHER	ROSETTA PIANA	RONDELLE	BEILAGSCHEIBE	131R
					ARANDELA	ANILHA	SLUITRING	FLADSKIVE	
17		**276-2446**		1	SCREW No. 8 x 3/8	VITE	VIS	SCHRAUBE	7450
					TORNILLO	PARAFUSO	SCHROEF	SKRUE	
18		**237443A1**		1	BUSHING	BOCCOLA	BAGUE	BUECHSE	095B
					CASQUILLO	CASQUILHO	LAGERBUS	BOESNING	
		378922A1		1	KIT Inc. 4, 5, 6, 7, 8, 11, 13	KIT	POCHETTE	PACKUNG	4830
					JEUGO	JOGO	KIT	KIT	

08-25		p1	11/04

CYLINDER ASSY - HITCH (278277A3)
GRUPPO DEL CILINDRO - ATTACCO (278277A3)
VÉRIN D'ATTELAGE (278277A3)
KRAFTHEBERZYLINDER (278277A3)

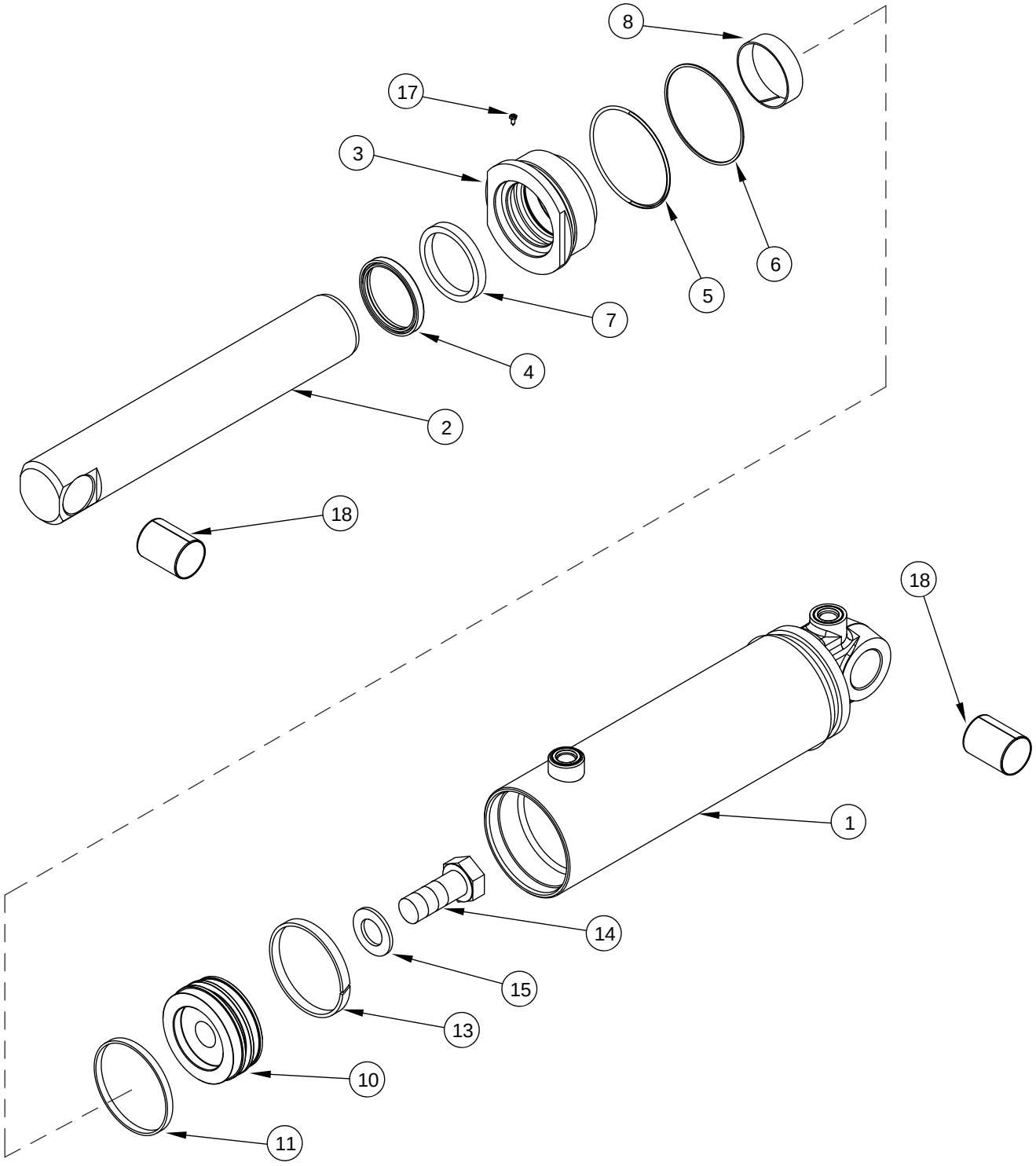

CONJUNTO DEL CILINDRO - ENGANCHE (278277A3)
CONJUNTO DO CILINDRO - ENGATE (278277A3)
CILINDERCONSTRUCTIE - HEFINRICHTING (278277A3)
CYLINDERSAMLING - TRÆK (278277A3)

R	N	P.N.	MOD	Q	Description Denominacion	Descrizione Denominação	Description Beschrijving	Bezeichnung Beskrivelse	L.C.
		278277A3		1	CYLINDER ASSY. 95 ID x 260 mm strk, Part Number Stamped On Cylinder, Inc. 1 - 18				
						CILINDRO, COMPLESS.	VERIN	ZYLINDER (KPLT.)	P477
					CILINDRO (CONJUNTO)	CILINDRO CONJUNTO	CYLINDER ASSY.	CYLINDER ASSY.	
1		**303872A1**		1	JACK BODY	CORPO DEL CYLINDRO	CYLINDRE-DE-VERIN	ZYLINDERKOERPER	Z461
					CILINDRO DE GATO	CORPO MACACO	JACK BODY	JACK BODY	
2		**303880A1**		1	ROD, PISTON	ASTA DEL PISTONE	TIGE DE VERIN	KOLBENSTANGE	Z093
					VASTAGO CILINDRO	HASTE CILINDRO	STAAK	PLEJLSTANG	
3		**303876A1**		1	CAP CYLINDER END	CUSCIN.,GHIANDOLA	PALIER DE VERIN	ZYLINDERKAPPE	Z364
					PALIER	TAMPA CILINDRO	CAP CYLINDER END	CAP CYLINDER END	
4		**D95146**		1	WIPER	TERGICRISTALLO	RACLEUR BALAIS	WISCHER	9860
					LIMPIADOR	LIMPADOR	INZETSTUK	VISKER	
5		**238-5239**		1	O-RING 3-5/8 x 1/8	ANELLO TOROIDALE	JOINT TORIQUE	O-RING	7176
					JUNTA HERMETICA	ANEL O	O-RING	O-RING	
6		**G109299**		1	RING	ANELLO	ANNEAU	RING	045A
					ANILLO	ANEL	RING	RING	
7		**G109228**		1	SEAL	ANELLO DI TENUTA	JOINT	DICHTUNG	132A
					ANILLO DE CIERRE	ANEL DE VEDACAO	DICHTINGSRING	PAKNINGSRING	
8		**258960A1**		1	BEARING	CUSCINETTO USURA	PALIER	SPINDELLAGER	P440
					COJINETE	ROLAMENTO	BEARING	BEARING	
10		**278285A2**		1	JACK PISTON	PISTONE, CILINDRO	PISTON-DE-VERIN	HUBZYLINDERKOLBEN	Z586
					PISTON CILINDRO	PISTAO DO CILINDRO	JACK PISTON	JACK PISTON	
11		**190332A1**		1	SEAL	ANELLO DI TENUTA	JOINT	DICHTUNG	132A
					ANILLO DE CIERRE	ANEL DE VEDACAO	DICHTINGSRING	PAKNINGSRING	
13		**278331A1**		1	RING, WEAR	ANELLO ANTIUSURA	BAGUE D"USURE	VERSCHLEISSRING	A012
					ANILLO DE DESGASTE	ANILLO DE DESGASTE	SLIJRING	SLIDRING	
14		**25974R1**		1	BOLT 1 NF x 2-1/2; 8	BULLONE	BOULON	SCHAUBENBOLZEN	140B
					TORNILLO	PARAFUSO	BOUT	SKRUE	
15		**G32303**		1	WASHER	ROSETTA PIANA	RONDELLE	BEILAGSCHEIBE	131R
					ARANDELA	ANILHA	SLUITRING	FLADSKIVE	
17		**276-2446**		1	SCREW No. 8 x 3/8	VITE	VIS	SCHRAUBE	7450
					TORNILLO	PARAFUSO	SCHROEF	SKRUE	
18		**237443A1**		1	BUSHING	BOCCOLA	BAGUE	BUECHSE	095B
					CASQUILLO	CASQUILHO	LAGERBUS	BOESNING	
		378712A1		1	KIT Inc. 4, 5, 6, 7, 8, 11, 13	KIT	POCHETTE	PACKUNG	4830
					JEUGO	JOGO	KIT	KIT	

08-26		p1	11/04

CYLINDER ASSEMBLY - HITCH (278419A3)
GRUPPO DEL CILINDRO - ATTACCO (278419A3)
VÉRIN D'ATTELAGE (278419A3)
KRAFTHEBERZYLINDER (278419A3)

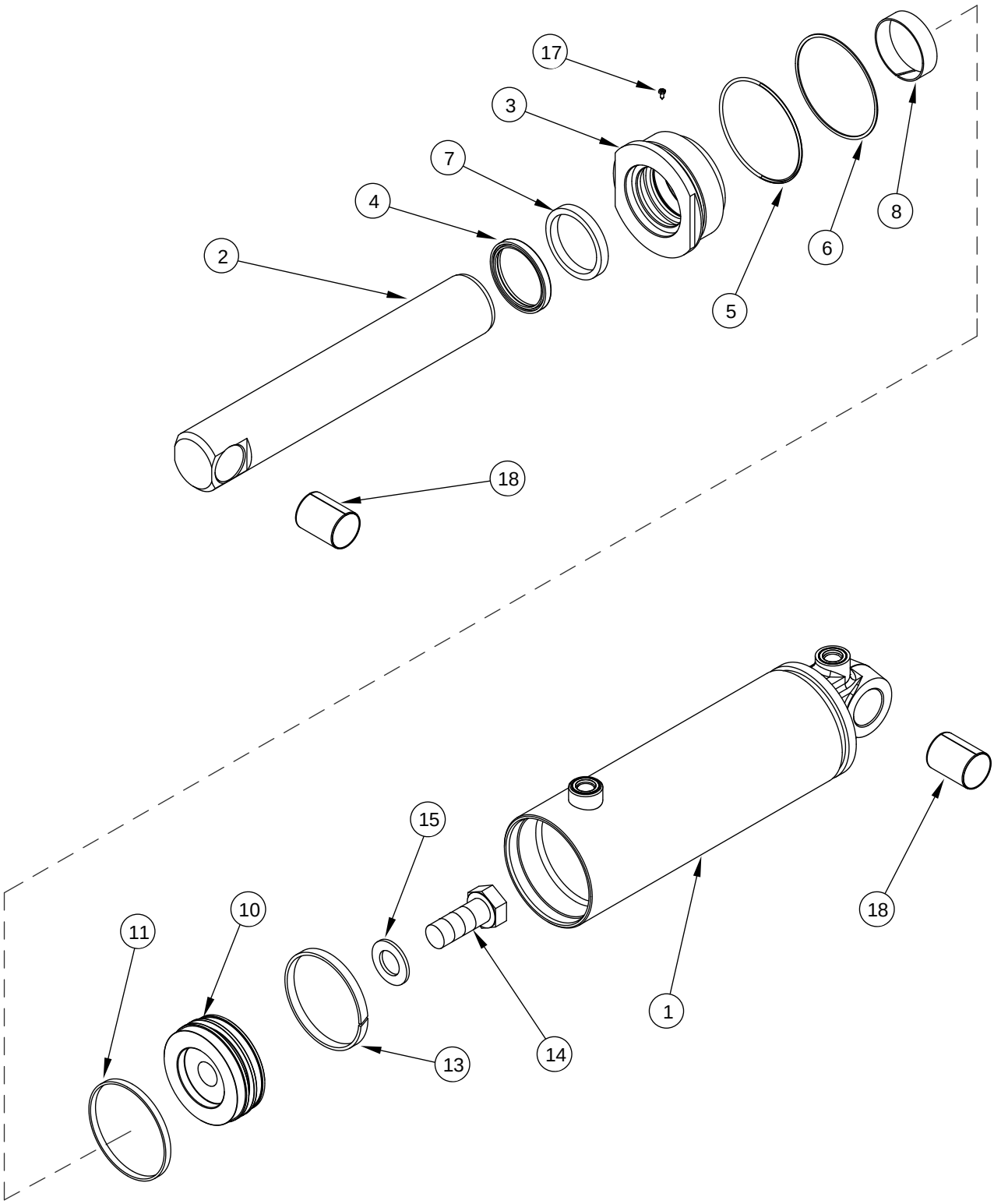

CONJUNTO DEL CILINDRO - ENGANCHE (278419A3)
CONJUNTO DO CILINDRO - ENGATE (278419A3)
CILINDERCONSTRUCTIE - HEFINRICHTING (278419A3)
CYLINDERSAMLING - TRÆK (278419A3)

R	N	P.N.	MOD	Q	Description Denominacion	Descrizione Denominação	Description Beschrijving	Bezeichnung Beskrivelse	L.C.
		278419A3		1	CYLINDER 105 ID x 260 mm strk, Part Number Stamped On Cylinder, Inc. 1 - 18				
						CILINDRO	VERIN	ZYLINDER	164C
					CILINDRO	CILINDRO	CYLINDER	CYLINDER	
1		303867A1		1	JACK BODY	CORPO DEL CYLINDRO	CYLINDRE-DE-VERIN	ZYLINDERKOERPER	Z461
					CILINDRO DE GATO	CORPO MACACO	JACK BODY	JACK BODY	
2		303880A1		1	ROD, PISTON	ASTA DEL PISTONE	TIGE DE VERIN	KOLBENSTANGE	Z093
					VASTAGO CILINDRO	HASTE CILINDRO	STAAK	PLEJLSTANG	
3		303871A1		1	CAP CYLINDER END	CUSCIN.,GHIANDOLA	PALIER DE VERIN	ZYLINDERKAPPE	Z364
					PALIER	TAMPA CILINDRO	CAP CYLINDER END	CAP CYLINDER END	
4		D95146		1	WIPER	TERGICRISTALLO	RACLEUR BALAIS	WISCHER	9860
					LIMPIADOR	LIMPADOR	INZETSTUK	VISKER	
5		238-5241		1	O-RING 3-7/8 ID x 1/8	ANELLO TOROIDALE	JOINT TORIQUE	O-RING	7176
					JUNTA HERMETICA	ANEL O	O-RING	O-RING	
6		281408A1		1	SEAL	ANELLO DI TENUTA	JOINT	DICHTUNG	132A
					ANILLO DE CIERRE	ANEL DE VEDACAO	DICHTINGSRING	PAKNINGSRING	
7		G109228		1	SEAL	ANELLO DI TENUTA	JOINT	DICHTUNG	132A
					ANILLO DE CIERRE	ANEL DE VEDACAO	DICHTINGSRING	PAKNINGSRING	
8		258960A1		1	BEARING	CUSCINETTO USURA	PALIER	SPINDELLAGER	P440
					COJINETE	ROLAMENTO	BEARING	BEARING	
10		278426A2		1	JACK PISTON	PISTONE, CILINDRO	PISTON-DE-VERIN	HUBZYLINDERKOLBEN	Z586
					PISTON CILINDRO	PISTAO DO CILINDRO	JACK PISTON	JACK PISTON	
11		378717A1		1	SEAL	ANELLO DI TENUTA	JOINT	DICHTUNG	132A
					ANILLO DE CIERRE	ANEL DE VEDACAO	DICHTINGSRING	PAKNINGSRING	
13		281412A1		1	SEAL	ANELLO DI TENUTA	JOINT	DICHTUNG	132A
					ANILLO DE CIERRE	ANEL DE VEDACAO	DICHTINGSRING	PAKNINGSRING	
14		25974R1		1	BOLT 1 NF x 2-1/2; 8	BULLONE	BOULON	SCHAUBENBOLZEN	140B
					TORNILLO	PARAFUSO	BOUT	SKRUE	
15		G32303		1	WASHER	ROSETTA PIANA	RONDELLE	BEILAGSCHEIBE	131R
					ARANDELA	ANILHA	SLUITRING	FLADSKIVE	
17		276-2446		1	SCREW No. 8 x 3/8	VITE	VIS	SCHRAUBE	7450
					TORNILLO	PARAFUSO	SCHROEF	SKRUE	
18		237443A1		1	BUSHING	BOCCOLA	BAGUE	BUECHSE	095B
					CASQUILLO	CASQUILHO	LAGERBUS	BOESNING	
		378711A1		1	KIT Inc. 4, 5, 6, 7, 8, 11, 13	KIT	POCHETTE	PACKUNG	4830
					JEUGO	JOGO	KIT	KIT	

POWER BEYOND VALVE ASSEMBLY
GRUPPO VALVOLA POWER BEYOND
DISTRIBUTEUR DE RÉSERVE DE PUISSANCE
VENTIL FÜR EXTERNE VERBRAUCHER

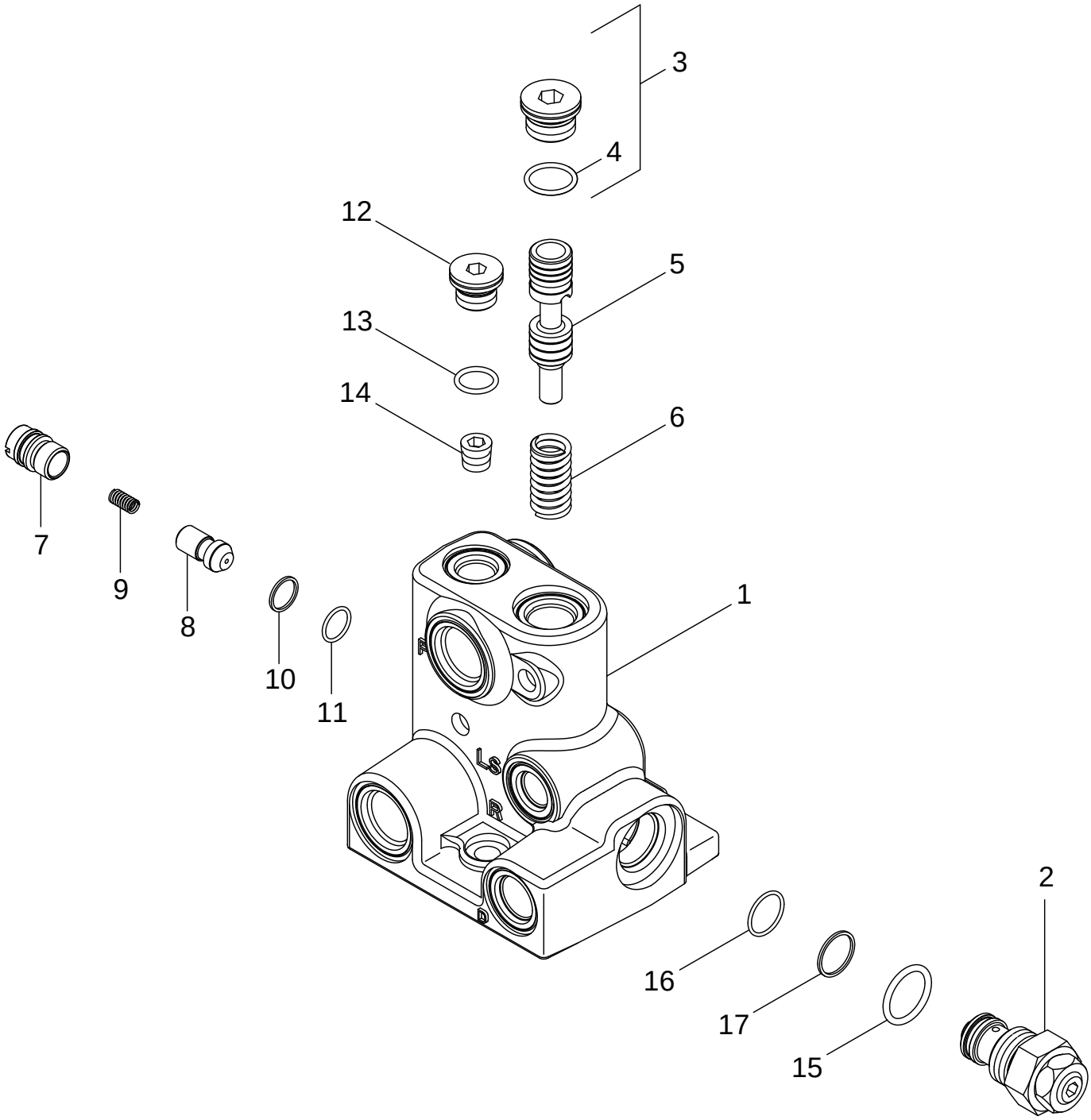

CONJUNTO DE LA VÁLVULA DE ALIMENTACIÓN AUXILIAR
CONJUNTO DA VÁLVULA DA RESERVA DE POTÊNCIA
AFTAKASVERMOGEN KLEPCONSTRUCTIE
SEPARAT DREVET VENTIL

R	N	P.N.	MOD	Q	Description Denominacion	Descrizione Denominação	Description Beschrijving	Bezeichnung Beskrivelse	L.C.
		86989384	a	1	VALVE, HYDRAULIC Power Beyond, Inc. 1 - 17				
						VALVOLA IDRAULICA	SOUPAPE HYDRAULIQU	VENTIL, HYDRAULISCH	010V
					VALVULA HIDRAULICA	VALVULA HIDRAULICA	KLEP, HYDRAULISCH	VENTIL HYDRAULIK	
		87442165	b	1	VALVE, HYDRAULIC Power Beyond, Inc. 1 - 17				
						VALVOLA IDRAULICA	SOUPAPE HYDRAULIQU	VENTIL, HYDRAULISCH	010V
					VALVULA HIDRAULICA	VALVULA HIDRAULICA	KLEP, HYDRAULISCH	VENTIL HYDRAULIK	
1		NSS		1	NOT SERVICED SEPARATELY Body				
						NON FORNITO SEPARAT	NON FOURNI SEPAREMI	KEIN ERSATZTEIL	064N
					NO SE REPARA SEPARA	NOT SERVICED SEPARA	NIET ALLEEN VERKRIJG	NOT SERVICED SEPARA	
2		315796A1		1	VALVE, PRESSURE RELIEF Inc. 15 - 17				
						VALVOLA, DI SICUREZZA	SOUPAPE, DÉCHARGE	ÜBERDRUCKVENTIL	007V
					VÁLVULA, DESCARGA	VÁLVULA, DESCARGA	OVERDRUKVENTIEL	SIKKERHEDSVENTIL	
3		221579A1		1	PLUG M22, Inc. 4	TAPPO	BOUCHON	STOPFEN	050T
					TAPÓN	BUJÃO	PLUG	PROP	
4		637-63193		1	O-RING 19,3 ID x 2,2	ANELLO TOROIDALE	JOINT TORIQUE	O-RING	7176
					JUNTA HERMETICA	ANEL O	O-RING	O-RING	
5		86990388		1	SPOOL	PISTONCINO	TIROIR	SPULE	134P
					PISTONCILLO	CARRETO	SPOEL	SPOLE	
6		87441634		1	SPRING	MOLLA	RESSORT	FEDER	100M
					RESORTE	MOLA	VEER	FJEDER	
		1542563C1		1	VALVE, CHECK Inc. 7 - 11	VALVOLA, DI RITEGNO	CLAPET ANTI-RETOUR	RÜCKSCHLAGVENTIL	P394
					VALVULA DE CIERRE	VALVULA CHECAGEM	INZETSTUK	KONTRAVENTIL	
7		NSS		1	NOT SERVICED SEPARATELY Plug				
						NON FORNITO SEPARAT	NON FOURNI SEPAREMI	KEIN ERSATZTEIL	064N
					NO SE REPARA SEPARA	NOT SERVICED SEPARA	NIET ALLEEN VERKRIJG	NOT SERVICED SEPARA	
8		1543329C1		1	POPPET, VALVE	VALVOLA A FUNGO	CLAPET	VENTILKEGEL	P048
					VÁLVULA DE PASO	VALVULA	POPPET, VALVE	DOKVENTIL	
9		NSS		1	NOT SERVICED SEPARATELY Spring				
						NON FORNITO SEPARAT	NON FOURNI SEPAREMI	KEIN ERSATZTEIL	064N
					NO SE REPARA SEPARA	NOT SERVICED SEPARA	NIET ALLEEN VERKRIJG	NOT SERVICED SEPARA	
10		238-6015		1	O-RING 9/16 ID x 1/16	ANELLO TOROIDALE	JOINT TORIQUE	O-RING	7176
					JUNTA HERMETICA	ANEL O	O-RING	O-RING	
11		G108723		1	RING Back Up	ANELLO	ANNEAU	RING	045A
					ANILLO	ANEL	RING	RING	
12		221578A1		1	PLUG M18, Inc. 13	TAPPO	BOUCHON	STOPFEN	050T
					TAPÓN	BUJÃO	PLUG	PROP	
13		637-63153		1	O-RING 15,3 ID x 2,2	ANELLO TOROIDALE	JOINT THORIQUE	DICHTRING	055A
					JUNTA HERMETICA	O-RING	O-RING	O-RING	
14		217-432		1	PLUG	TAPPO	BOUCHON	STOPFEN	050T
					TAPÓN	BUJÃO	PLUG	PROP	
15		237-6012		1	O-RING 59/64 ID x 7/64	ANELLO TOROIDALE	JOINT TORIQUE	O-RING	7176
					JUNTA HERMETICA	ANEL O	O-RING	O-RING	
16		238-6018		1	O-RING 3/4 ID x 1/16	ANELLO TOROIDALE	JOINT TORIQUE	O-RING	7176
					JUNTA HERMETICA	ANEL O	O-RING	O-RING	
17		G35540		1	RING Back-Up	ANELLO	ANNEAU	RING	045A
					ANILLO	ANEL	RING	RING	

(a) BSN AJB0304849
(b) ASN AJB0304849

SECTION INDEX

09-01	FRONT FRAME
09-02	FRONT TOW CLEVIS
09-03	FRONT WEIGHTS
09-04	FRONT WEIGHTS
09-05	FRONT HITCH
09-06	FENDERS - FRONT, NARROW
09-07	FENDERS - FRONT, WIDE
09-08	FENDERS - REAR
09-09	FENDERS - REAR, EXTRA WIDE
09-10	HOOD TILTING
09-11	FAN SHIELDS
09-12	HOOD FIXED
09-13	CAB - MOUNTING AND FRAME, BSN AJB0355923
09-14	CAB - MOUNTING AND FRAME, ASN AJB0355923
09-15	CAB - ROOF
09-16	CAB - EXTERIOR TRIM
09-17	CAB - STEPS
09-18	CAB - FRONT WINDOW STEP
09-19	CAB - DOOR
09-20	CAB - REAR WINDOW
09-21	CAB - FIXED GLASS
09-22	MIRRORS
09-23	CAB - HEADLINER, STANDARD TRIM
09-24	CAB - HEADLINER, DELUXE AND LUXURY TRIM
09-25	CAB - FLOOR MAT AND INSULATION
09-26	CAB - TRIM, FENDERS
09-27	CAB - TRIM, CAB POSTS
09-28	CAB - INSTRUMENT PANEL
09-29	SEAT ASSEMBLY
09-30	CUSHION ASSEMBLY - SEAT
09-31	SUSPENSION ASSEMBLY - SEAT
09-32	SEMI ACTIVE SUSPENSION ASSEMBLY - SEAT
09-33	SEAT - INSTRUCTIONAL
09-34	CONSOLE, RIGHT HAND, STANDARD CAB
09-35	CONSOLE, RIGHT HAND, DELUXE AND LUXURY CAB
09-36	MONITOR MOUNTING - CAB ROOF
09-37	MONITOR MOUNTING - CAB A POST
09-38	AIR CONDITIONING - COMPRESSOR MOUNTING
09-39	AIR CONDITIONING - CONDENSER
09-40	HEATER SYSTEM
09-41	AIR CONDITIONING - CLIMATE CONTROL UNIT, WITHOUT AUTO TEMP CONTROL
09-42	AIR CONDITIONING - CLIMATE CONTROL UNIT, WITH AUTO TEMP CONTROL
09-43	AIR CONDITIONING - AIR FILTER
09-44	AIR CONDITIONING - DUCTS
09-45	CAB - INSULATION
09-46	DRAWBAR AND HAMMERSTRAP
09-47	DRAWBAR AND HAMMERSTRAP - ITALY ONLY
09-48	HITCH - SUPPORTS AND ROCKSHAFT
09-49	HITCH - TOP LINK
09-50	HITCH - LIFT LINKS
09-51	HITCH - LOWER LIFT LINKS
09-52	HITCH - SWAY LIMITER
09-53	HITCH - POSITION SENSOR
09-54	HITCH - DRAFT CONTROL PINS
09-55	TRAILER HITCH - MANUAL PIN, FRANCE ONLY (CRAMER)

SECTION INDEX

09-56	TRAILER HITCH - MANUAL PIN, FRANCE ONLY (CBM)
09-57	TRAILER HITCH - AUTO CLEVIS, GERMANY ONLY (CRAMER)
09-58	TRAILER HITCH - AUTO CLEVIS, 37 MM, GERMANY ONLY (CRAMER)
09-59	TRAILER HITCH - AUTO CLEVIS, 32 MM, GERMANY ONLY (CRAMER)
09-60	TRAILER HITCH - AUTO CLEVIS, 38 MM, GERMANY ONLY (CBM)
09-61	TRAILER HITCH - MANUAL PIN, ITALY ONLY (CBM)
09-62	DECALS
09-63	DECALS - STEYR
09-64	DECALS

09-01		p1	12/02

FRONT FRAME
TELAIO ANTERIORE
CADRE AVANT
FRONTRAHMEN

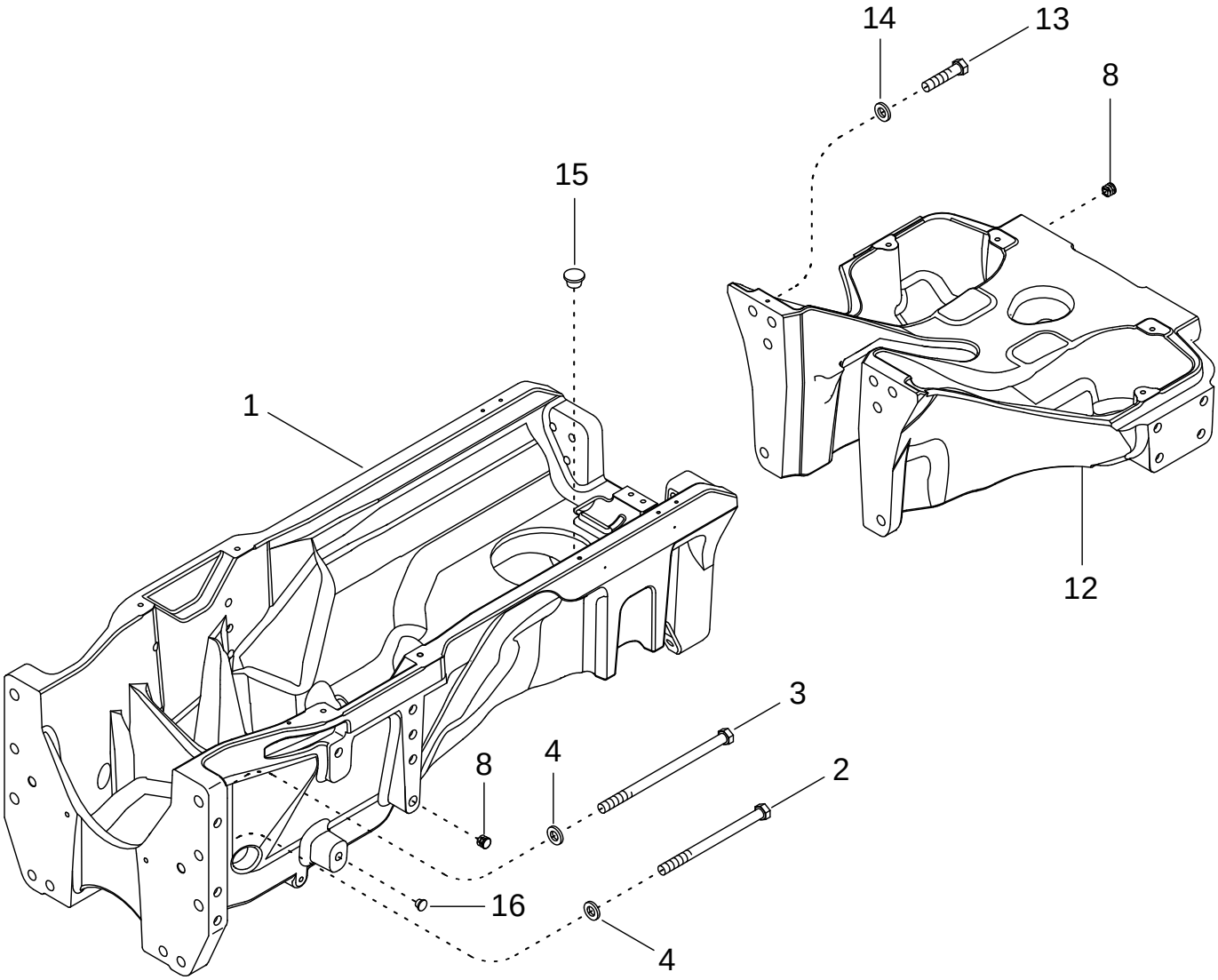

CHASIS DELANTERO
ARMAÇÃO DIANTEIRA
VOOR-FRAME
FORRESTE RAMME

R	N	P.N.	MOD	Q	Description Denominacion	Descrizione Denominação	Description Beschrijving	Bezeichnung Beskrivelse	L.C.
1		86993157		1	FRAME BASTIDOR	TELAIO ESTRUTURA	CHASSIS RAAM	GESTELL RAMME	077T
2		253636A1		4	SCREW M20 x 275; 10,9 TORNILLO	VITE PARAFUSO	VIS SCHROEF	SCHRAUBE SKRUE	7450
3		249541A1		6	SCREW M20 x 340; 10,9 TORNILLO	VITE PARAFUSO	VIS SCHROEF	SCHRAUBE SKRUE	7450
4		396-31081		10	WASHER 13/16 x 1-1/2 x 7/32 ARANDELA	ROSETTA PIANA ANILHA	RONDELLE SLUITRING	BEILAGSCHEIBE FLADSKIVE	131R
8		305138A1		30	PLUG TAPÓN	TAPPO BUJÃO	BOUCHON PLUG	STOPFEN PROP	050T
12		429830A1		1	FRAME Extension BASTIDOR	TELAIO ESTRUTURA	CHASSIS RAAM	GESTELL RAMME	077T
13		258504A1		8	SCREW M20 x 90; 10,9 TORNILLO	VITE PARAFUSO	VIS SCHROEF	SCHRAUBE SKRUE	7450
14		396-31081		8	WASHER 13/16 x 1-1/2 x 7/32 ARANDELA	ROSETTA PIANA ANILHA	RONDELLE SLUITRING	BEILAGSCHEIBE FLADSKIVE	131R
15		339158A1		2	PLUG TAPÓN	TAPPO BUJAO	BOUCHON PLUG	STOPFEN PROP	6400
16		128209A1		2	PLUG TAPÓN	TAPPO BUJÃO	BOUCHON PLUG	STOPFEN PROP	050T

09-02		p1	12/02

FRONT TOW CLEVIS
MANIGLIONE DI TRAINO ANTERIORE
CHAPE DE REMORQUAGE AVANT
VORDERE ZUGGABEL

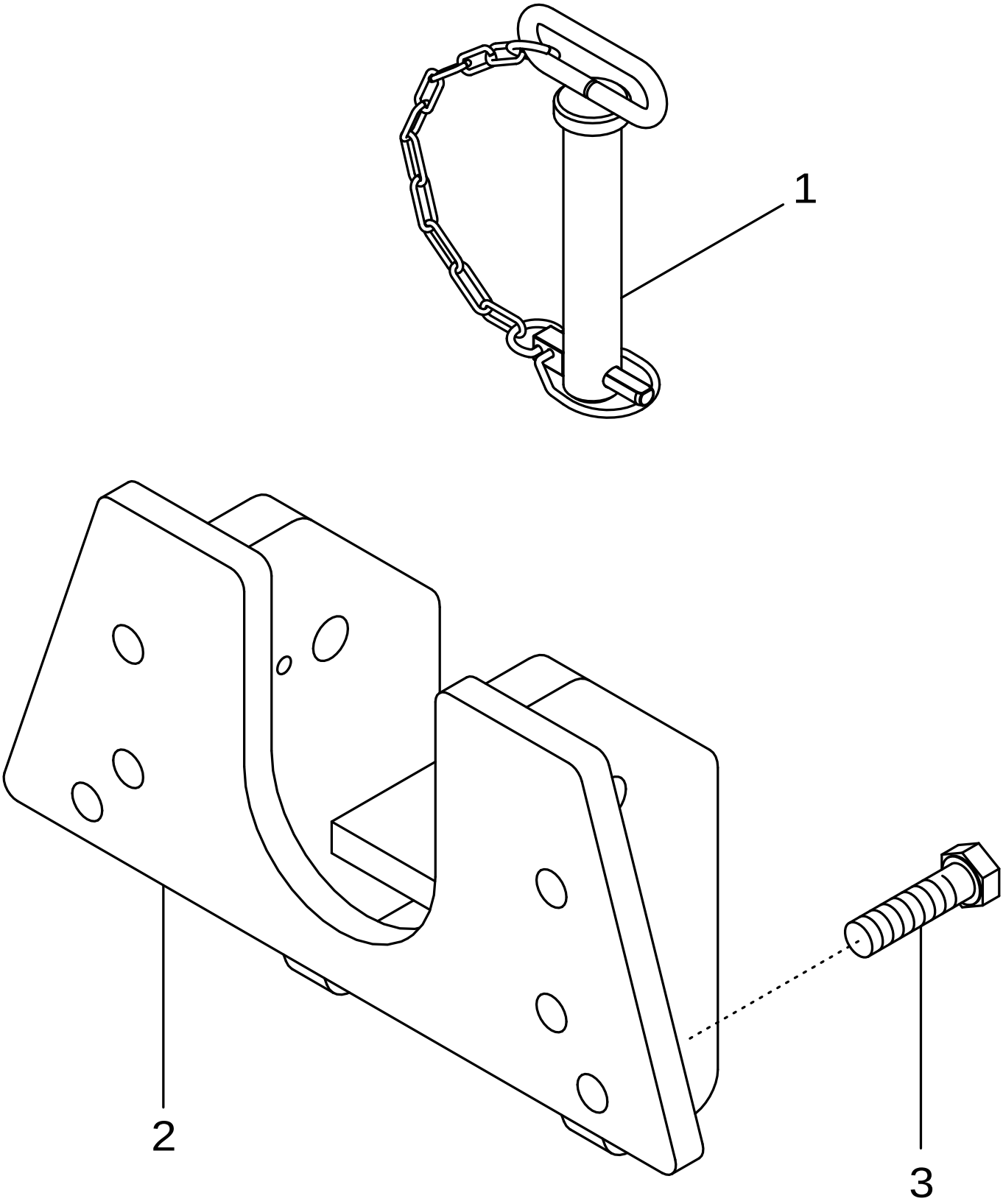

GANCHO DE REMOLQUE DELANTERO
FORQUILHA DE REBOQUE DIANTEIRA
TREKGAFFEL VOOR
FORRESTE TRÆKBØJLE

R	N	P.N.	MOD	Q	Description Denominacion	Descrizione Denominação	Description Beschrijving	Bezeichnung Beskrivelse	L.C.
1		1974215C3		1	PIN, HITCH PASADOR DE ENGANCH	PERNO DELL'ATTACCO PINO	AXE D'ATTELAGE PIN, HITCH	KUPPLUNGSBOLZEN TRÆKKROGSPIND	P740
2		351005A3		1	CLEVIS HORQUILLA PEQUENA	FORCELLINO FORQUILHA	FOURCHETTE GAFFEL	GABEL GAFFELBOLT	P472
3		366870A1		6	SCREW TORNILLO	VITE PARAFUSO	VIS SCHROEF	SCHRAUBE SKRUE	7450

MX210 MX230
MX255 MX285

09-03		p1	12/02

FRONT WEIGHTS
PESI ANTERIORI
MASSES AVANT
FRONTGEWICHTE

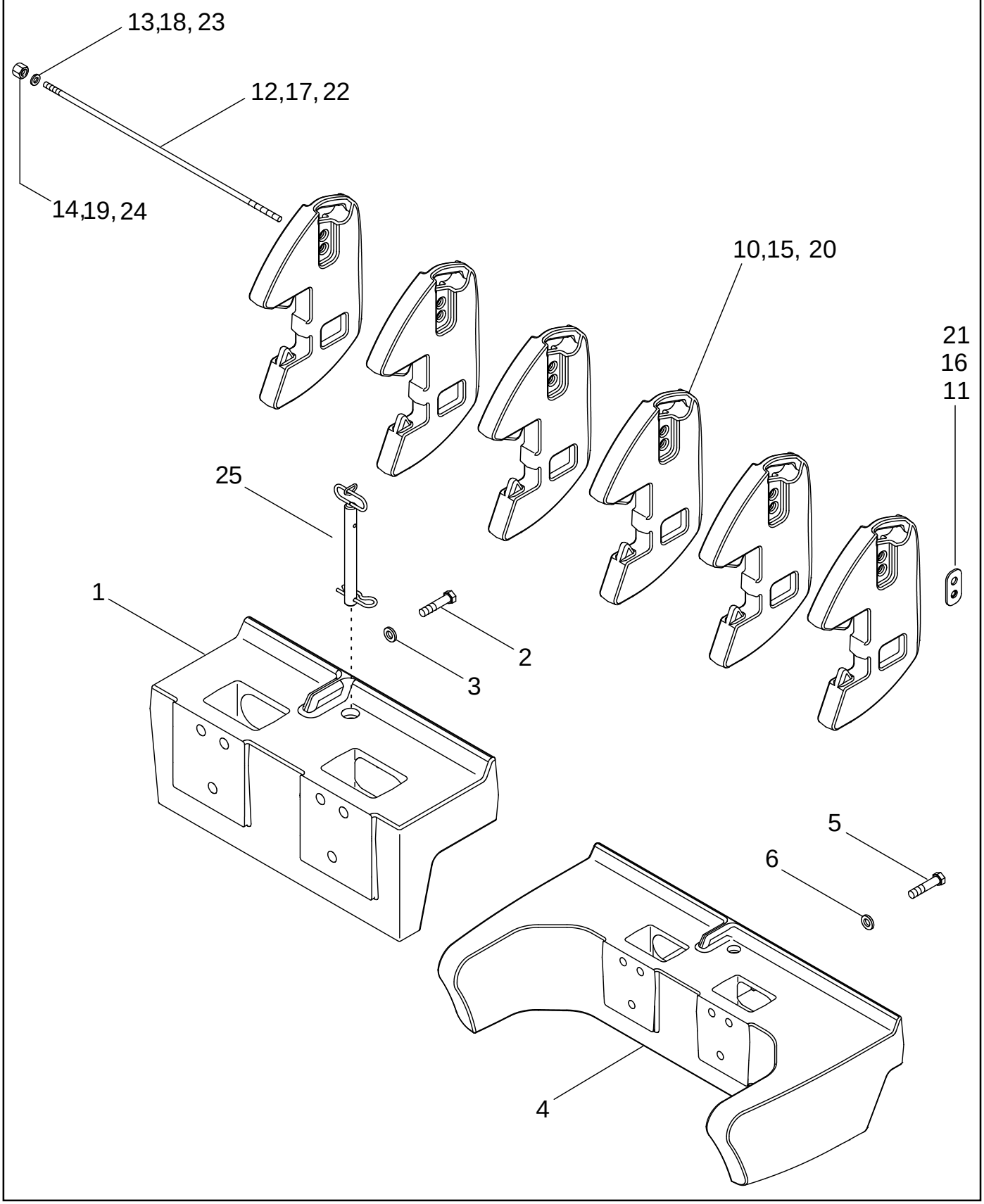

PESOS DELANTEROS
PESOS DIANTEIROS
FRONTGEWICHTEN
FORVÆGTE

R	N	P.N.	MOD	Q	Description Denominacion	Descrizione Denominação	Description Beschrijving	Bezeichnung Beskrivelse	L.C.
	1	435971A1		1	WEIGHT Small Support, Inc. 1 - 3				
						PESO	POIDS	GEWICHT	9740
					CONTRAPESO	CONTRAPESO	WEIGHT	FRONTVÆGT	
1		405844A2		1	BRACKET Small	STAFFA	PATTE FIXATION	HALTERUNG	225S
					PIEZA DE SOPORTE	BRACADEIRA	STEUNBEUGEL	BESLAG	
2		258504A1		6	SCREW M20 x 90; 10,9	VITE	VIS	SCHRAUBE	7450
					TORNILLO	PARAFUSO	SCHROEF	SKRUE	
3		396-31081		6	WASHER 13/16 x 1-1/2 x 7/32				
						ROSETTA PIANA	RONDELLE	BEILAGSCHEIBE	131R
					ARANDELA	ANILHA	SLUITRING	FLADSKIVE	
	1	435970A1		1	WEIGHT Large Support, Inc. 4 - 6				
						PESO	POIDS	GEWICHT	9740
					CONTRAPESO	CONTRAPESO	WEIGHT	FRONTVÆGT	
4		405845A2		1	BRACKET Large	STAFFA	PATTE FIXATION	HALTERUNG	225S
					PIEZA DE SOPORTE	BRACADEIRA	STEUNBEUGEL	BESLAG	
5		258504A1		6	SCREW M20 x 90; 10,9	VITE	VIS	SCHRAUBE	7450
					TORNILLO	PARAFUSO	SCHROEF	SKRUE	
6		396-31081		6	WASHER 13/16 x 1-1/2 x 7/32				
						ROSETTA PIANA	RONDELLE	BEILAGSCHEIBE	131R
					ARANDELA	ANILHA	SLUITRING	FLADSKIVE	
	1	435972A1		1	ATTACHMENT 270 Kg (600 lb), Inc. 10 - 14				
						ATTACCO, SPECIALE	EQUIPEMENT SPECIAL	ZUSATZAUSRÜSTUNG	0340
					ACCESORIO ESPECIAL	ACESSORIO	ATTACHMENT	TILBEHØR	
10	1	405846A3		6	WEIGHT	ZAVORRA	POIDS	GEWICHT	010Z
					LASTRE	BALASTRO	BALLAST	FRONTVAEGT	
11		229483A2		1	RETAINER	RITEGNO	RETENEUR	HALTEVORRICHTUNG	7125
					RETENEDOR	RETENTOR	HOUDER	HOLDER	
12		337880A1		1	THREADED ROD	ASTA FILETTATA	TIGE FILETÉE	GEWINDESTANGE	Z645
					VARILLA ROSCADA	HASTE ROSCADA	SCHROEFSTANG	GEVINDSTANG	
13		896-16016		1	WASHER 17,5 x 34 x 5 mm	ROSETTA PIANA	RONDELLE	SCHEIBE	9720
					ARANDELA	ANILHA	SLUITRING	FLADSKIVE	
14		829-1416		1	NUT M16; 10	DADO	ECROU	MUTTER	5780
					TUERCA	PORCA	MOER	MØTRIK	
	1	435973A1		1	ATTACHMENT 454 Kg (100 lb), Inc. 15 - 19				
						ATTACCO, SPECIALE	EQUIPEMENT SPECIAL	ZUSATZAUSRÜSTUNG	0340
					ACCESORIO ESPECIAL	ACESSORIO	ATTACHMENT	TILBEHØR	
15	1	405846A3		10	WEIGHT	ZAVORRA	POIDS	GEWICHT	010Z
					LASTRE	BALASTRO	BALLAST	FRONTVAEGT	
16		229483A2		1	RETAINER	RITEGNO	RETENEUR	HALTEVORRICHTUNG	7125
					RETENEDOR	RETENTOR	HOUDER	HOLDER	
17		324475A1		1	TRUSS ROD	TIRANTE	TIRANT	SPANNSTANGE	P388
					TIRANTE	TIRANTE	TRUSS ROD	GITTERSTANG	
18		896-16016		1	WASHER 17,5 x 34 x 5 mm	ROSETTA PIANA	RONDELLE	SCHEIBE	9720
					ARANDELA	ANILHA	SLUITRING	FLADSKIVE	
19		829-1416		1	NUT M16; 10	DADO	ECROU	MUTTER	5780
					TUERCA	PORCA	MOER	MØTRIK	

(1) Order From Machinery Price List

09-03		p2	12/02

FRONT WEIGHTS
PESI ANTERIORI
MASSES AVANT
FRONTGEWICHTE

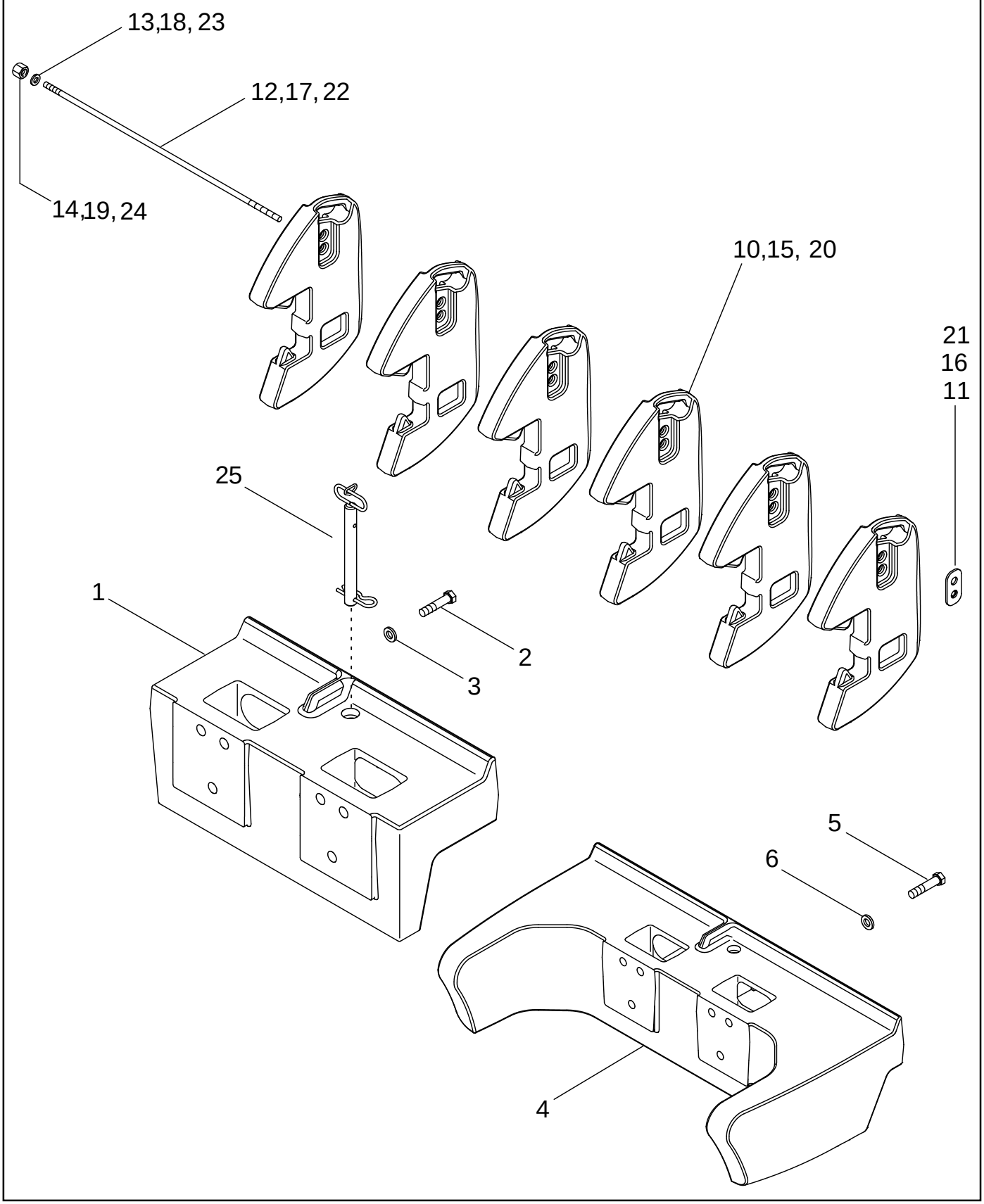

PESOS DELANTEROS
PESOS DIANTEIROS
FRONTGEWICHTEN
FORVÆGTE

R	N	P.N.	MOD	Q	Description Denominacion	Descrizione Denominação	Description Beschrijving	Bezeichnung Beskrivelse	L.C.
	1	**435974A1**		1	SET 815 Kg (1800 lb), Inc. 20 - 24				
						SET	ENSEMBLE JEU	SATZ	7540
					CONJUNTO JUEGO	CONJUNTO JOGO	SET	SET	
20	1	**405846A3**		18	WEIGHT	ZAVORRA	POIDS	GEWICHT	010Z
					LASTRE	BALASTRO	BALLAST	FRONTVAEGT	
21		**229483A2**		1	RETAINER	RITEGNO	RETENEUR	HALTEVORRICHTUNG	7125
					RETENEDOR	RETENTOR	HOUDER	HOLDER	
22		**324474A1**		1	TRUSS ROD	TIRANTE	TIRANT	SPANNSTANGE	P388
					TIRANTE	TIRANTE	TRUSS ROD	GITTERSTANG	
23		**896-16016**		1	WASHER 17,5 x 34 x 5 mm	ROSETTA PIANA	RONDELLE	SCHEIBE	9720
					ARANDELA	ANILHA	SLUITRING	FLADSKIVE	
24		**829-1416**		1	NUT M16; 10	DADO	ECROU	MUTTER	5780
					TUERCA	PORCA	MOER	MØTRIK	
25		**297750A1**		1	PIN	PERNO	AXE	BOLZEN	080P
					PERNO	PERNO	PEN	STIFT	

(1) Order From Machinery Price List

09-04		p1	12/02

FRONT WEIGHTS
PESI ANTERIORI
MASSES AVANT
FRONTGEWICHTE

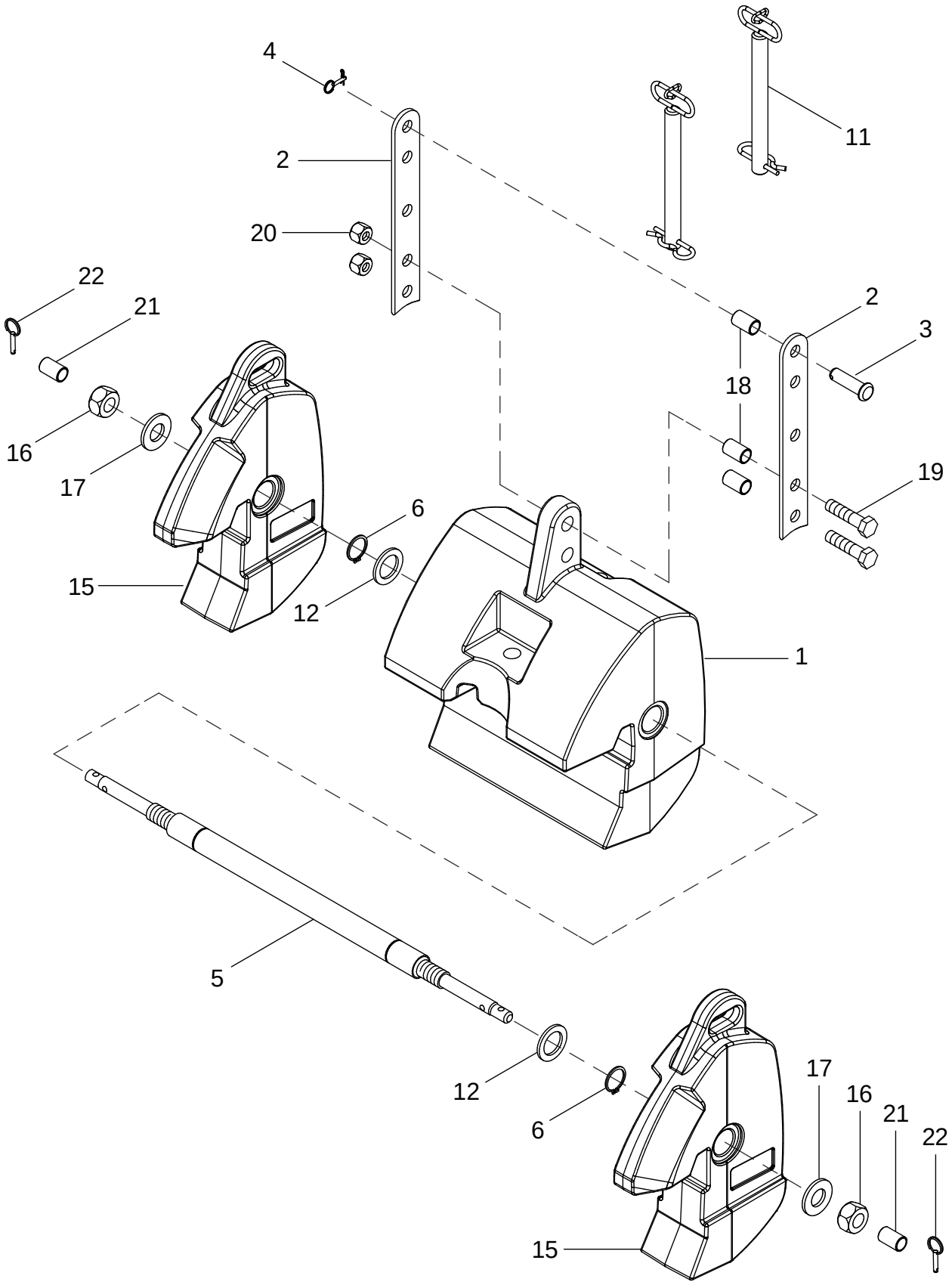

PESOS DELANTEROS
PESOS DIANTEIROS
FRONTGEWICHTEN
FORVÆGTE

R	N	P.N.	MOD	Q	Description Denominacion	Descrizione Denominação	Description Beschrijving	Bezeichnung Beskrivelse	L.C.
	1	**435975A1**		1	KIT 454 Kg (1000 lb), Inc. 1 - 12, 18 - 22				
						CORREDO	KIT	SATZ	305C
					EQUIPO	KIT	KIT	UDSTYR	
	1	**435976A1**		1	KIT 682 Kg (1500 lb), Inc. 1 - 22				
						CORREDO	KIT	SATZ	305C
					EQUIPO	KIT	KIT	UDSTYR	
1	1	**405847A2**		1	WEIGHT 454 Kg (1000 lb)	ZAVORRA	POIDS	GEWICHT	010Z
					LASTRE	BALASTRO	BALLAST	FRONTVAEGT	
2		**407253A1**		2	BRACKET	STAFFA	PATTE FIXATION	HALTERUNG	225S
					PIEZA DE SOPORTE	BRACADEIRA	STEUNBEUGEL	BESLAG	
3		**810751C1**		1	PIN 1 x 3-1/2 in	PERNO	AXE	BOLZEN	080P
					PERNO	PERNO	PEN	STIFT	
4		**357476A1**		1	PIN, SPLIT (COTTER)	COPPIGLIA	GOUPILLE	SPLINT	P160
					PASADOR ABIERTO	TROCO DE ABRIR	SPLITPEN	SPLITBOLT	
5		**359436A2**		1	ROD, MOUNTING	ASTA, MONTAGGIO	TIGE DE MONTAGE	MONTAGESTANGE	P752
					VARILLA DE MONTAGE	VARILLA DE MONTAJE	ROD, MOUNTING	OPHÆNGSSTANG	
6		**800-4550**		2	SNAP RING No. 50	ANELLO ELASTICO	ANNEAU-D'ARRET	SICHERUNGSRING	P345
					ANILLO DE CIERRE	ANEL TRAVA	SNAP RING	SNAP RING	
11		**297750A2**		1	PIN	PERNO	AXE	BOLZEN	080P
					PERNO	PERNO	PEN	STIFT	
12		**358352A1**		2	WASHER	ROSETTA PIANA	RONDELLE	BEILAGSCHEIBE	131R
					ARANDELA	ANILHA	SLUITRING	FLADSKIVE	
15	1	**405848A1**		2	WEIGHT 113 Kg (250 lb)	ZAVORRA	POIDS	GEWICHT	010Z
					LASTRE	BALASTRO	BALLAST	FRONTVAEGT	
16		**829-1436**		2	NUT M36	DADO	ECROU	MUTTER	5780
					TUERCA	PORCA	MOER	MØTRIK	
17		**896-16036**		2	WASHER 39 x 78 x 7 mm	ROSETTA PIANA	RONDELLE	SCHEIBE	9720
					ARANDELA	ANILHA	SLUITRING	FLADSKIVE	
18		**398406R1**		3	BUSHING	BOCCOLA	BAGUE	BUECHSE	095B
					CASQUILLO	CASQUILHO	LAGERBUS	BOESNING	
19		**827-24100**		2	BOLT M24 x 100; 10.9	BULLONE	BOULON	SCHAUBENBOLZEN	0810
					TORNILLO	PARAFUSO	BOUT	SKRUE	
20		**832-10424**		2	NUT M24; 8	DADO	ECROU	MUTTER	5780
					TUERCA	PORCA	MOER	MØTRIK	
21		**392004R1**		2	SPACER	DISTANZIALE	ENTRETOISE	DISTANZSTÜCK	075D
					SEPARADOR	ESPACADOR	AFSTANDSRING	AFSTANDSSTYKKE	
22		**378704A1**		2	PIN	PERNO	AXE	BOLZEN	080P
					PERNO	PERNO	PEN	STIFT	

(1) Order From Machinery Price List

09-05		p1	12/02

FRONT HITCH
ATTACCO ANTERIORE
ATTELAGE AVANT
FRONTKRAFTHEBER

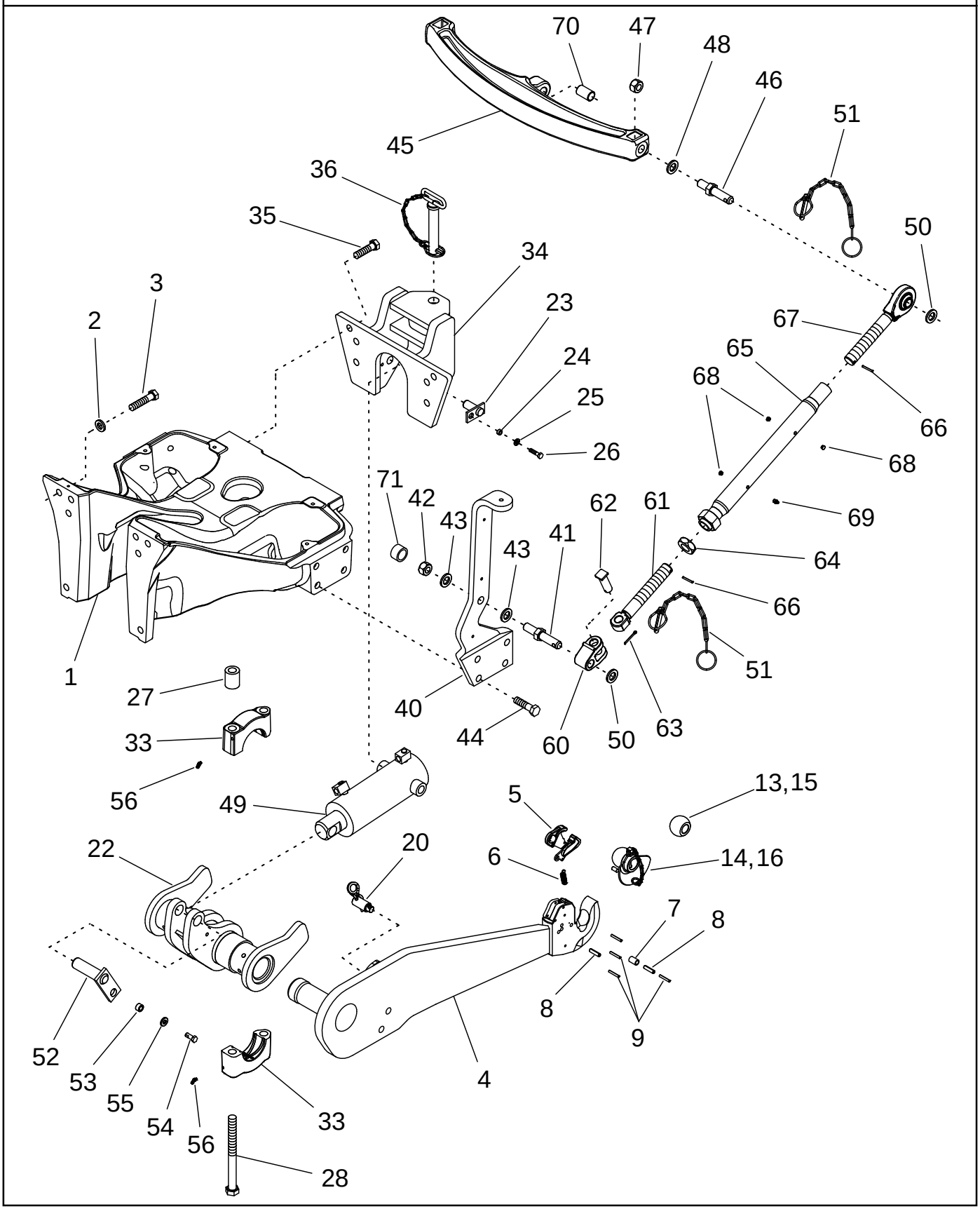

ENGANCHE DELANTERO
ENGATE DIANTEIRO
HEFINRICHTING VOOR
OPHÆNG FORTIL

R	N	P.N.	MOD	Q	Description Denominacion	Descrizione Denominação	Description Beschrijving	Bezeichnung Beskrivelse	L.C.
1		429830A1		1	FRAME	TELAIO	CHASSIS	GESTELL	077T
					BASTIDOR	ESTRUTURA	RAAM	RAMME	
2		396-31081		8	WASHER 13/16 x 1-1/2 x 7/32				
						ROSETTA PIANA	RONDELLE	BEILAGSCHEIBE	131R
					ARANDELA	ANILHA	SLUITRING	FLADSKIVE	
3		258504A1		8	SCREW M20 x 90; 10,9	VITE	VIS	SCHRAUBE	7450
					TORNILLO	PARAFUSO	SCHROEF	SKRUE	
		377916A2		1	LINK, LIFT Right Hand, Shown, Inc. 4 - 9				
						PUNTELLO	BEQUILLE	STUTZEN	239P
					PUNTAL	SUPORTE	KRUK	LOEFTELED	
		377915A2		1	LINK, LIFT Left Hand, Inc. 4 - 9				
						PUNTELLO	BEQUILLE	STUTZEN	239P
					PUNTAL	SUPORTE	KRUK	LOEFTELED	
4		NSS		1	NOT SERVICED SEPARATELY Link				
						NON FORNITO SEPARAT	NON FOURNI SEPAREMI	KEIN ERSATZTEIL	064N
					NO SE REPARA SEPARA	NOT SERVICED SEPARA	NIET ALLEEN VERKRIJG	NOT SERVICED SEPARA	
5		370030A1		1	LATCH	CHIAVISTELLO	LOQUET	KLINKE	156C
					PESTILLO	TRINCO	KLINK	PAL	
6		357749A1		1	SPRING	MOLLA	RESSORT	FEDER	100M
					RESORTE	MOLA	VEER	FJEDER	
7		359049A1		1	PIN, LARGE 5 x 15 mm	SPINA, GRANDE	AXE, GROS	BOLZEN, GROSS	Z009
					BULON/PIN, LARGO	PINO LARGO	PIN, LARGE	STOR PIND	
		370217A1		1	PIN, SPLIT (COTTER) Inc. 8, 9				
						COPPIGLIA	GOUPILLE	SPLINT	270C
					PASADOR ABIERTO	TROCO DE ABRIR	SPLITPEN	SPLITBOLT	
8		738-51040		2	PIN, ROLL 10 x 40 mm	SPINA ELASTICA	GOUPILLE ELASTIQUE	SPANNSTIFT	P613
					PASADOR TUBOLAR	TROCO	SPANSTIFT	SPLIT	
9		838-3640		4	PIN 6 x 40 mm	PERNO	AXE	BOLZEN	080P
					PERNO	PERNO	PEN	STIFT	
13		321081A1		2	BALL 28.4 mm	SFERA	BILLE	KUGEL	0460
					BOLA	ESFERA	KOGEL	KUGLE	
14		132123A1		2	BALL JOINT 28.4 mm	GIUNTO SFERICO	ROTULE	KUGELGELENK	070G
					JUNTA DE ROTULA	JUNTA ESFÉRICA	KOGELGEWRICHT	KUGLELED	
15		359189A2		2	BALL JOINT 37.5 mm	GIUNTO SFERICO	ROTULE	KUGELGELENK	070G
					JUNTA DE ROTULA	JUNTA ESFÉRICA	KOGELGEWRICHT	KUGLELED	
16		381642A1		2	BALL 37.5 mm	SFERA	BILLE	BALL	140S
					BOLA	ESFERA	KOGEL	KUGLE	
20		337589A1		2	PIN, HITCH	PERNO DELL'ATTACCO	AXE D'ATTELAGE	KUPPLUNGSBOLZEN	P740
					PASADOR DE ENGANCH	PINO	PIN, HITCH	TRÆKKROGSPIND	
22		309721A4		1	ROCKSHAFT	ALBERO BILANCIERE	ARBRE OSCILLANT	KIPPHEBELWELLE	7230
					ARBOL OSCILANTE	EIXO OSCILANTE	ROCKSHAFT	VUGGEAKSEL	
23		349940A1		2	PIN	PERNO	AXE	BOLZEN	080P
					PERNO	PERNO	PEN	STIFT	
24		D95748		2	SPACER	DISTANZIALE	ENTRETOISE	DISTANZSTÜCK	8090
					ESPACIADOR	ESPACADOR	AFSTANDSRING	AFSTANDSSTYKKE	
25		896-11010		2	WASHER 11 x 21 x 2,5 mm	ROSETTA PIANA	RONDELLE	SCHEIBE	9720
					ARANDELA	ANILHA	SLUITRING	FLADSKIVE	
26		627-10040		2	SCREW M10 x 40; 10.9	VITE	VIS	SCHRAUBE	7450
					TORNILLO	PARAFUSO	SCHROEF	SKRUE	

09-05		p2	12/02

FRONT HITCH
ATTACCO ANTERIORE
ATTELAGE AVANT
FRONTKRAFTHEBER

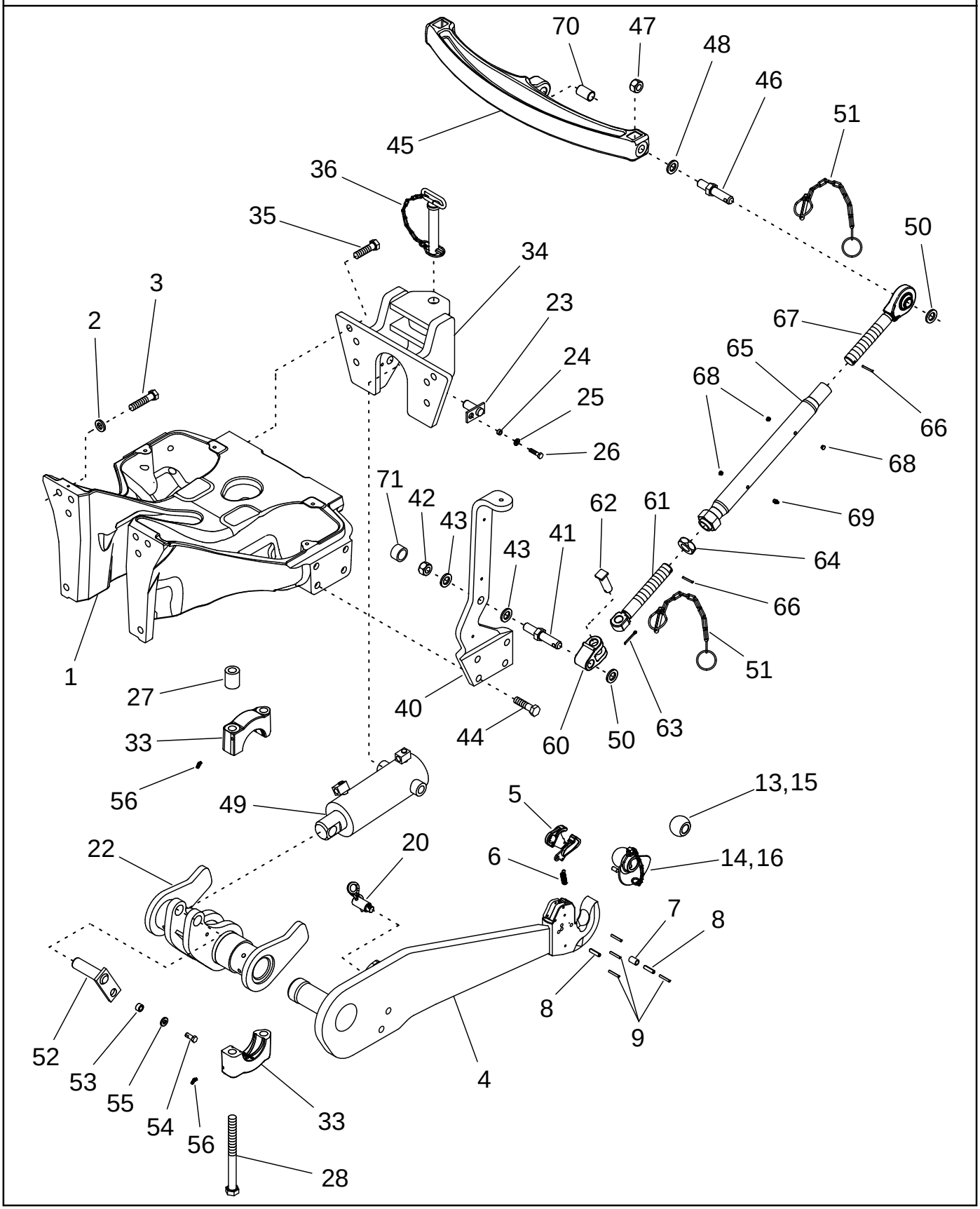

ENGANCHE DELANTERO
ENGATE DIANTEIRO
HEFINRICHTING VOOR
OPHÆNG FORTIL

R	N	P.N.	MOD	Q	Description Denominacion	Descrizione Denominação	Description Beschrijving	Bezeichnung Beskrivelse	L.C.
27		355763A2		4	SPACER SEPARADOR	DISTANZIALE ESPACADOR	ENTRETOISE AFSTANDSRING	DISTANZSTÜCK AFSTANDSSTYKKE	075D
28		827-24270		4	SCREW M24 x 270; 10.9 TORNILLO	VITE PARAFUSO	VIS SCHROEF	SCHRAUBE SKRUE	7450
33		1533227C1		4	SUPPORT APOYADERO	SUPPORTO SUPORTE	SUPPORT SUPPORT	STUETZE SUPPORT	8790
34		351005A2		1	CLEVIS HORQUILLA PEQUENA	FORCELLINO FORQUILHA	FOURCHETTE GAFFEL	GABEL GAFFELBOLT	P472
35		366870A1		6	SCREW TORNILLO	VITE PARAFUSO	VIS SCHROEF	SCHRAUBE SKRUE	7450
36		1974215C3		1	PIN, HITCH PASADOR DE ENGANCH	PERNO DELL'ATTACCO PINO	AXE D'ATTELAGE PIN, HITCH	KUPPLUNGSBOLZEN TRÆKKROGSPIND	P740
40		356970A4		1	BRACKET Right Hand, Shown, Inc. 41 - 43, 71 PIEZA DE SOPORTE	STAFFA SUPORTE	PATTE FIXATION STEUNBEUGEL	HALTERUNG BESLAG	1010
40		356969A4		1	BRACKET Left Hand, Inc. 41 - 43, 71 PIEZA DE SOPORTE	STAFFA SUPORTE	PATTE FIXATION STEUNBEUGEL	HALTERUNG BESLAG	1010
41		372116A1		1	PIN PERNO	PERNO PERNO	AXE PEN	BOLZEN STIFT	080P
42		829-1424		1	NUT M24; 10 TUERCA	DADO PORCA	ECROU MOER	MUTTER MØTRIK	010D
43		896-11024		2	WASHER 26 x 44 x 5 mm ARANDELA	ROSETTA PIANA ANILHA	RONDELLE SLUITRING	SCHEIBE FLADSKIVE	9720
44		366870A1		8	SCREW TORNILLO	VITE PARAFUSO	VIS SCHROEF	SCHRAUBE SKRUE	7450
45		365221A3		1	LINK, UPPER Inc. 46 - 48 ESLABON	TIRANTE, SUPERIORE ELO SUPERIOR	TROISIEME POINT LINK, UPPER	LENKER, OBEN OVRE LED	P635
46		356930A3		2	PIN PERNO	PERNO PERNO	AXE PEN	BOLZEN STIFT	080P
47		829-1424		2	NUT M24; 10 TUERCA	DADO PORCA	ECROU MOER	MUTTER MØTRIK	010D
48		896-11024		2	WASHER 26 x 44 x 5 mm ARANDELA	ROSETTA PIANA ANILHA	RONDELLE SLUITRING	SCHEIBE FLADSKIVE	9720
49		348474A1		1	CYLINDER ASSY. CILINDRO (CONJUNTO)	CILINDRO, COMPLESS. CILINDRO CONJUNTO	VERIN CYLINDER ASSY.	ZYLINDER (KPLT.) CYLINDER ASSY.	P477
50		896-11024		4	WASHER 26 x 44 x 5 mm ARANDELA	ROSETTA PIANA ANILHA	RONDELLE SLUITRING	SCHEIBE FLADSKIVE	9720
51		373170A1		4	CHAIN (AGRICULTURE) CADENA	CATENA CORRENTE	CHAINE (AGRICOLE) CHAIN (AGRICULTURE)	KETTE (LANDSCHINEN) CHAIN (AGRICULTURE)	1540
52		321367A3		1	PIN ASSY. PASADOR (CONJUNTO)	GRUPPO SPINA PINO CONJUNTO	CHEVILLE (ASSEMBLEE) PIN ASSY.	STIFT (KPLT.) PIN ASSY.	P524
53		321365A1		1	SPACER SEPARADOR	DISTANZIALE ESPACADOR	ENTRETOISE AFSTANDSRING	DISTANZSTÜCK AFSTANDSSTYKKE	075D
54		805-12030		1	SCREW M12 x 30; 10,9 TORNILLO	VITE PARAFUSO	VIS SCHROEF	SCHRAUBE SKRUE	7450
55		896-15012		1	WASHER 13,5 x 28 x 4 mm ARANDELA	ROSETTA PIANA ANILHA	RONDELLE SLUITRING	SCHEIBE FLADSKIVE	9720

09-05		p3	12/02

FRONT HITCH
ATTACCO ANTERIORE
ATTELAGE AVANT
FRONTKRAFTHEBER

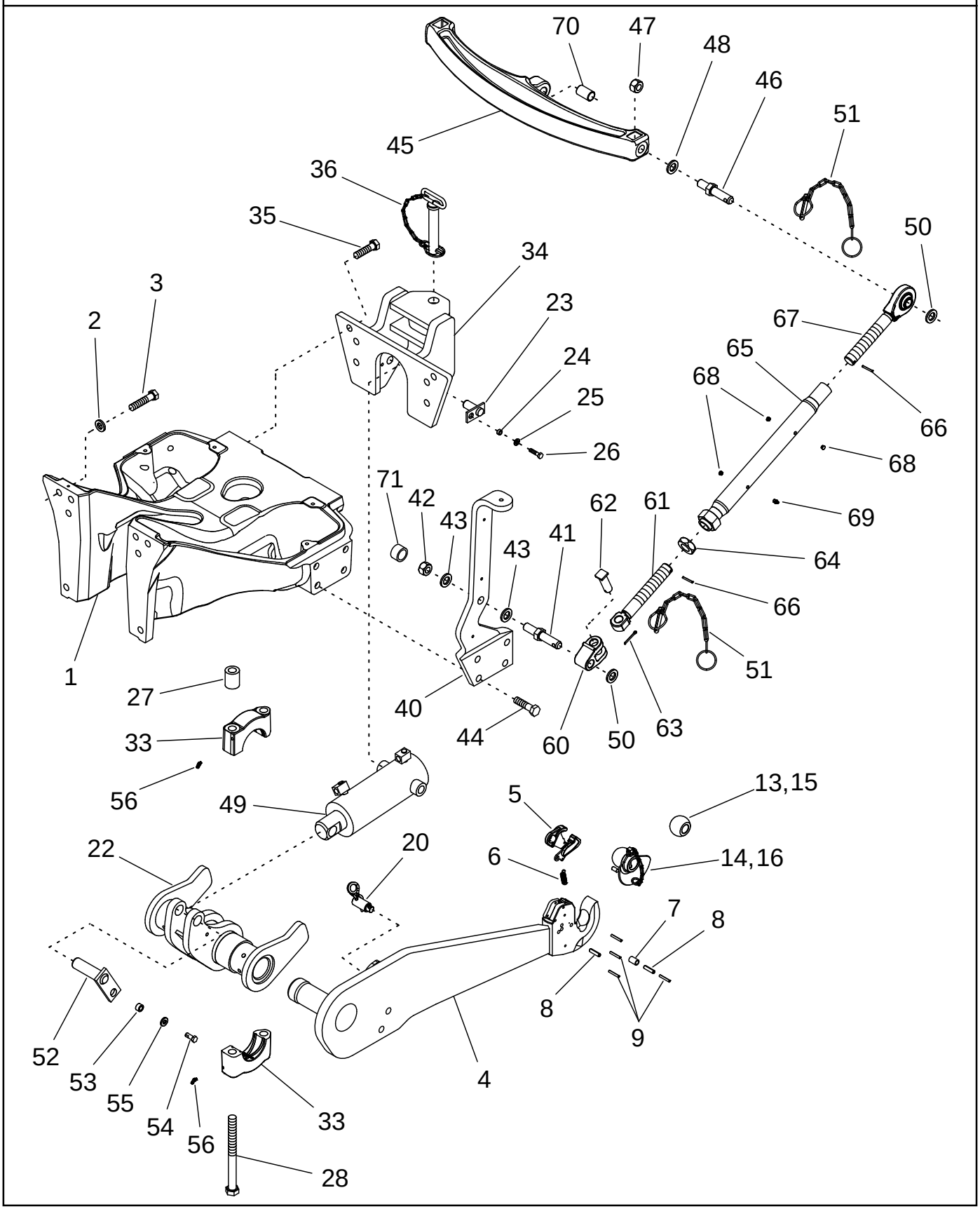

ENGANCHE DELANTERO
ENGATE DIANTEIRO
HEFINRICHTING VOOR
OPHÆNG FORTIL

R	N	P.N.	MOD	Q	Description Denominacion	Descrizione Denominação	Description Beschrijving	Bezeichnung Beskrivelse	L.C.
56		933801R91		4	NIPPLE, LUBE LUBRICADOR	INGRASSATORE LUBRIFICADOR	BAGUE RACCORD SMEERNIPPEL	SCHMIERNIPPEL SMØRENIPPEL	5360
60		1348049C1		1	PIVOT PIVOTE	ARTICOLAZIONE PIVOTE	PIVOT PIVOT	WELLENZAPFEN TAP	6330
61		364377A1		1	THREADED ROD Right Hand Threads				
					PALANCA MANDO	ASTA, CONTROLLO ALAVANCA DE CONTRO	TIGE-DE-COMMANDE THREADED ROD	BETAETIGUNGSSTANGE THREADED ROD	Z644
62		1348050C1		1	PIN, LARGE BULON/PIN, LARGO	SPINA, GRANDE PINO LARGO	AXE, GROS PIN, LARGE	BOLZEN, GROSS STOR PIND	Z009
63		733-5040			SPLIT PIN/SAFETY PIN 5 x 40 mm				
					PASADOR	PERNO DIVISO PINO	GOUPILLE SPLIT PIN/SAFETY PIN	SPLINT/STIFT SPLIT PIN/SAFETY PIN	Z510
64		829-4436		1	NUT M36 TUERCA	DADO PORCA	ECROU MOER	MUTTER MØTRIK	5780
65		364375A1		1	TURNBUCKLE TORNIQUETE	TENDITORE TORQUINETE	TENDEUR DE TRINGLE TURNBUCKLE	SPANNSCHLOSS STRAMMESKRUE	9460
66		838-3540		2	PIN, ROLL 5 x 40 mm PASADOR TUBOLAR	SPINA ELASTICA TROCO	GOUPILLE ELASTIQUE SPANSTIFT	SPANNSTIFT SPLIT	P613
67		364427A1		1	THREADED ROD Left Hand Threads				
					PALANCA MANDO	ASTA, CONTROLLO ALAVANCA DE CONTRO	TIGE-DE-COMMANDE THREADED ROD	BETAETIGUNGSSTANGE THREADED ROD	Z644
68		366505A1		3	PLUG TAPÓN	TAPPO BUJAO	BOUCHON PLUG	STOPFEN PROP	6400
69		1974039C1		1	FITTING CONEXION	RACCORDO CONEXAO	RACCORD FITTING	ANSCHLUSSSTÜCK FITTING	3300
70		398406R1		1	BUSHING CASQUILLO	BOCCOLA CASQUILHO	BAGUE LAGERBUS	BUECHSE BOESNING	095B
71		373182A1		1	CAP TAPON DEL DEPOSITO	TAPPO SERBATOIO TAMPAO DE RESERVAT	CHAPEAU RESERVOIRDOP	ABDECKAPPE TANKDAEKSEL	1380

09-06		p1	05/04

FENDERS - FRONT, NARROW
PARAFANGHI - ANTERIORI, STRETTI
GARDE-BOUE AVANT, ÉTROITS
VORDERE KOTFLÜGEL, SCHMAL

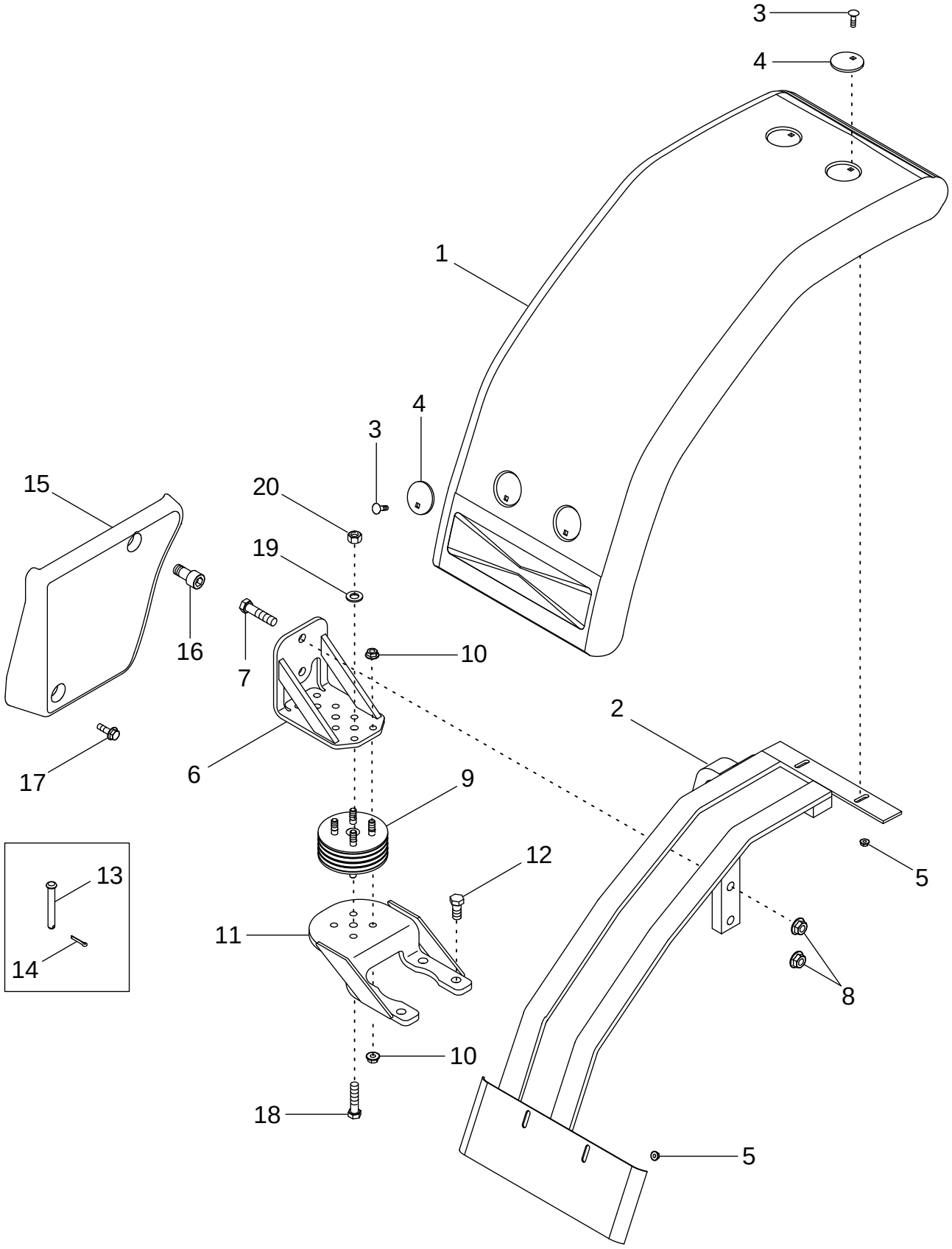

GUARDABARROS - DELANTERO, ESTRECHO
GUARDA-LAMAS DIANTEIROS - ESTREITOS
SPATBORDEN - VOORZIJDE, SMAL
SKÆRME - FOR, SMALLE

R	N	P.N.	MOD	Q	Description Denominacion	Descrizione Denominação	Description Beschrijving	Bezeichnung Beskrivelse	L.C.
	1	301436A	a	1	KIT Inc. 1 - 16	KIT	POCHETTE	PACKUNG	4830
					JEUGO	JOGO	KIT	KIT	
	1	719686016	b	1	DIA KIT, ADDITIONAL PROD. Inc. 1 - 12, 15 - 20				
						DIA KIT, PRODOTTI ADD	DIA KIT, PRODUITS ADD	NACHRÜST, ZUSÄTZLIC	100K
					DIA KIT,	DIA KIT, ADD.PRODUCTS	DIA KIT, ADDITIONAL PR	DIA KIT, ADD.PRODUCTS	
1		1340664C1		2	FENDER Narrow	PARAFANGO	GARDE-BOUE	KOTFLÜGEL	3180
					GUARDABARROS	GUARDA LAMAS	AFSCHERMING	SKÆRM	
2		244759A2		1	SUPPORT ASSY. Right Hand, Shown				
						SUPPORTO, COMPLESS	SUPPORT (ASSEMBLE)	STUETZE (KPLT.)	P427
					APOYADERO (CONJUNT	SUPORTE CONJUNTO	SUPPORT ASSY.	SUPPORT ASSY.	
2		244760A2		1	SUPPORT ASSY. Left Hand	SUPPORTO, COMPLESS	SUPPORT (ASSEMBLE)	STUETZE (KPLT.)	P427
					APOYADERO (CONJUNT	SUPORTE CONJUNTO	SUPPORT ASSY.	SUPPORT ASSY.	
3		612-6		8	SCREW M8 x 30; 4,6	VITE	VIS	SCHRAUBE	7450
					TORNILLO	PARAFUSO	SCHROEF	SKRUE	
4		1340559C2		8	WASHER 2-1/2	ROSETTA PIANA	RONDELLE	SCHEIBE	9720
					ARANDELA	ANILHA	SLUITRING	FLADSKIVE	
5		825-2408		8	NUT M8	DADO	ECROU	MUTTER	5780
					TUERCA	PORCA	MOER	MØTRIK	
6		257560A4	a	2	SUPPORT	SUPPORTO	SUPPORT	STUETZE	8790
					APOYADERO	SUPORTE	SUPPORT	SUPPORT	
6		87427813	b	2	SUPPORT	SUPPORTO	SUPPORT	STÜTZE	300S
					SOPORTE	SUPORTE	STEUN	BESLAG	
7		827-16070		4	SCREW M16 x 70; 10.9	VITE	VIS	SCHRAUBE	P136
					TORNILLO	PARAFUSO	SCHROEF	SKRUE	
8		825-51416		4	NUT M16	DADO	ECROU	MUTTER	5780
					TUERCA	PORCA	MOER	MØTRIK	
9		226690A2		2	SHOCK ABSORBER	AMMORTIZZATORE	AMORTISSEUR	STOSSDÄMPFER	036A
					AMORTIGUADOR	AMORTECEDOR	SCHOKDEMPER	STOEDDAEMPER	
10		9804279		16	NUT M12	DADO	ECROU	MUTTER	010D
					TUERCA	PORCA	MOER	MØTRIK	
11		426550A1	a	2	SUPPORT	SUPPORTO	SUPPORT	STÜTZE	300S
					SOPORTE	SUPORTE	STEUN	BESLAG	
11		87427814	b	2	SUPPORT	SUPPORTO	SUPPORT	STÜTZE	300S
					SOPORTE	SUPORTE	STEUN	BESLAG	
12		627-16040		8	SCREW M16 x 40; 10.9	VITE	VIS	SCHRAUBE	7450
					TORNILLO	PARAFUSO	SCHROEF	SKRUE	
13		439-5860	a	2	PIN, HEADED 1/2 x 3-3/4	PERNO CON TESTA	AXE A TÊTE	KOPFSTIFT	P888
					EJE CON CABEZA	PINO COM CABECA	PIN, HEADED	SPLIT MED HOVED	
14		432-1216	a	2	PIN, SPLIT (COTTER) 3/16 x 1				
						COPPIGLIA	GOUPILLE	SPLINT	P160
					PASADOR ABIERTO	TROCO DE ABRIR	SPLITPEN	SPLITBOLT	
15		253850A1		1	BUMPER Right Hand, Shown				
						PARAURTI	PARE-CHOCS	STOSSTANGE	1120
					PARACHOQUES	PARACHOQUES	SCHOKDEMPER	KOFANGER	
15		255685A1		1	BUMPER Left Hand	PARAURTI	PARE-CHOCS	STOSSTANGE	1120
					PARACHOQUES	PARACHOQUES	SCHOKDEMPER	KOFANGER	

(1) Order From Machinery Price List
(a) BSN JAZ129994
(b) ASN JAZ129994

09-06		p2	05/04

FENDERS - FRONT, NARROW
PARAFANGHI - ANTERIORI, STRETTI
GARDE-BOUE AVANT, ÉTROITS
VORDERE KOTFLÜGEL, SCHMAL

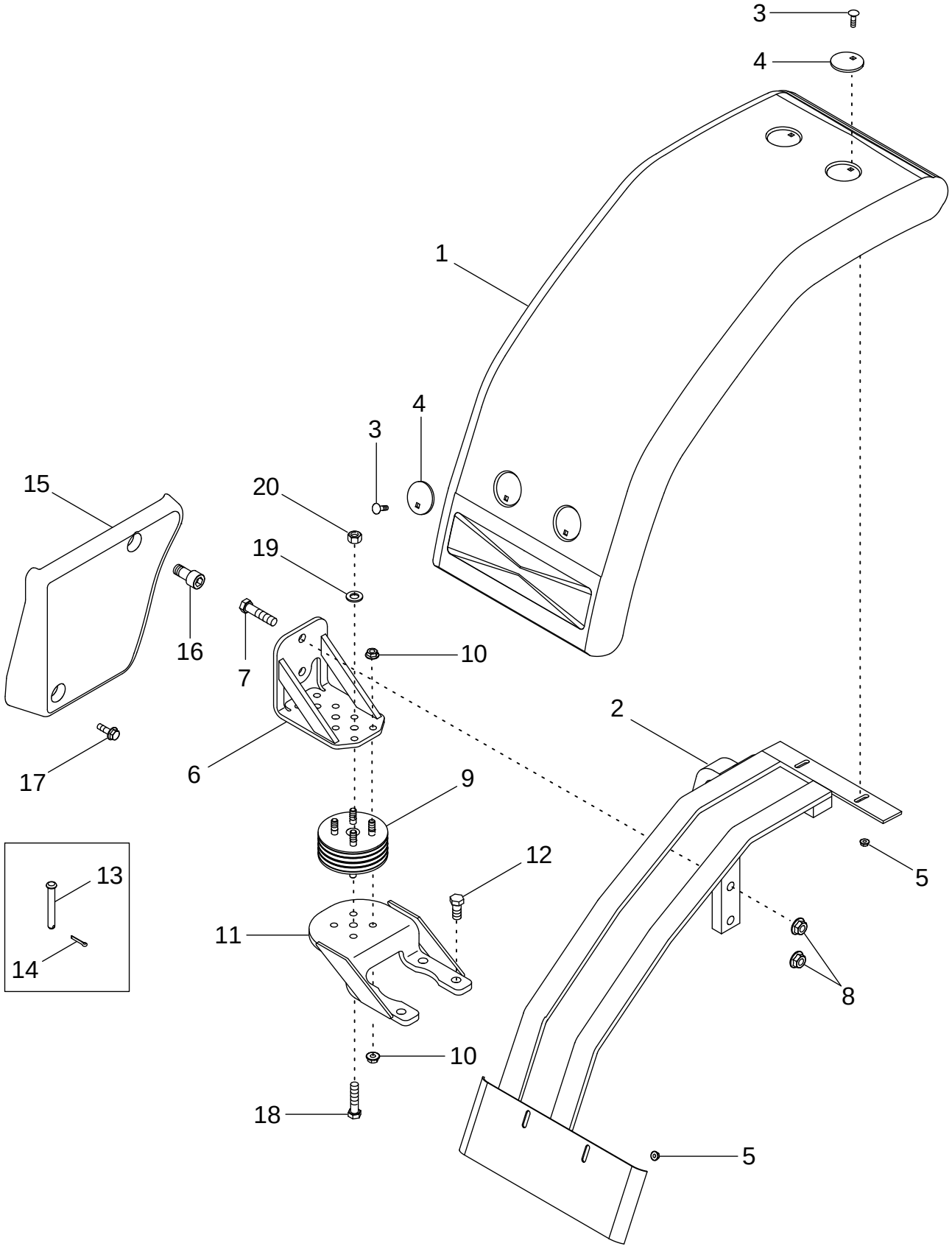

GUARDABARROS - DELANTERO, ESTRECHO
GUARDA-LAMAS DIANTEIROS - ESTREITOS
SPATBORDEN - VOORZIJDE, SMAL
SKÆRME - FOR, SMALLE

R	N	P.N.	MOD	Q	Description Denominacion	Descrizione Denominação	Description Beschrijving	Bezeichnung Beskrivelse	L.C.
16		565-111		2	SCREW M20 x 40 TORNILLO	VITE PARAFUSO	VIS SCHROEF	SCHRAUBE SKRUE	7450
17		555-6		2	SCREW M12 x 25; 8,8 TORNILLO	VITE PARAFUSO	VIS SCHROEF	SCHRAUBE SKRUE	7450
18		827-20100	a	2	SCREW M20 x 100; 10.9 TORNILLO	VITE PARAFUSO	VIS SCHROEF	SCHRAUBE SKRUE	7450
19		895-11020	a	2	WASHER 22 x 37 x 3 mm ARANDELA	ROSETTA PIANA ANILHA	RONDELLE SLUITRING	SCHEIBE FLADSKIVE	9720
20		832-10420	a	2	NUT M20 TUERCA	DADO PORCA	ECROU MOER	MUTTER MØTRIK	010D

(a) ASN JAZ129994

09-07		p1	05/04

FENDERS - FRONT, WIDE
PARAFANGHI - ANTERIORI, LARGHI
GARDE-BOUE AVANT, LARGES
VORDERE KOTFLÜGEL, BREIT

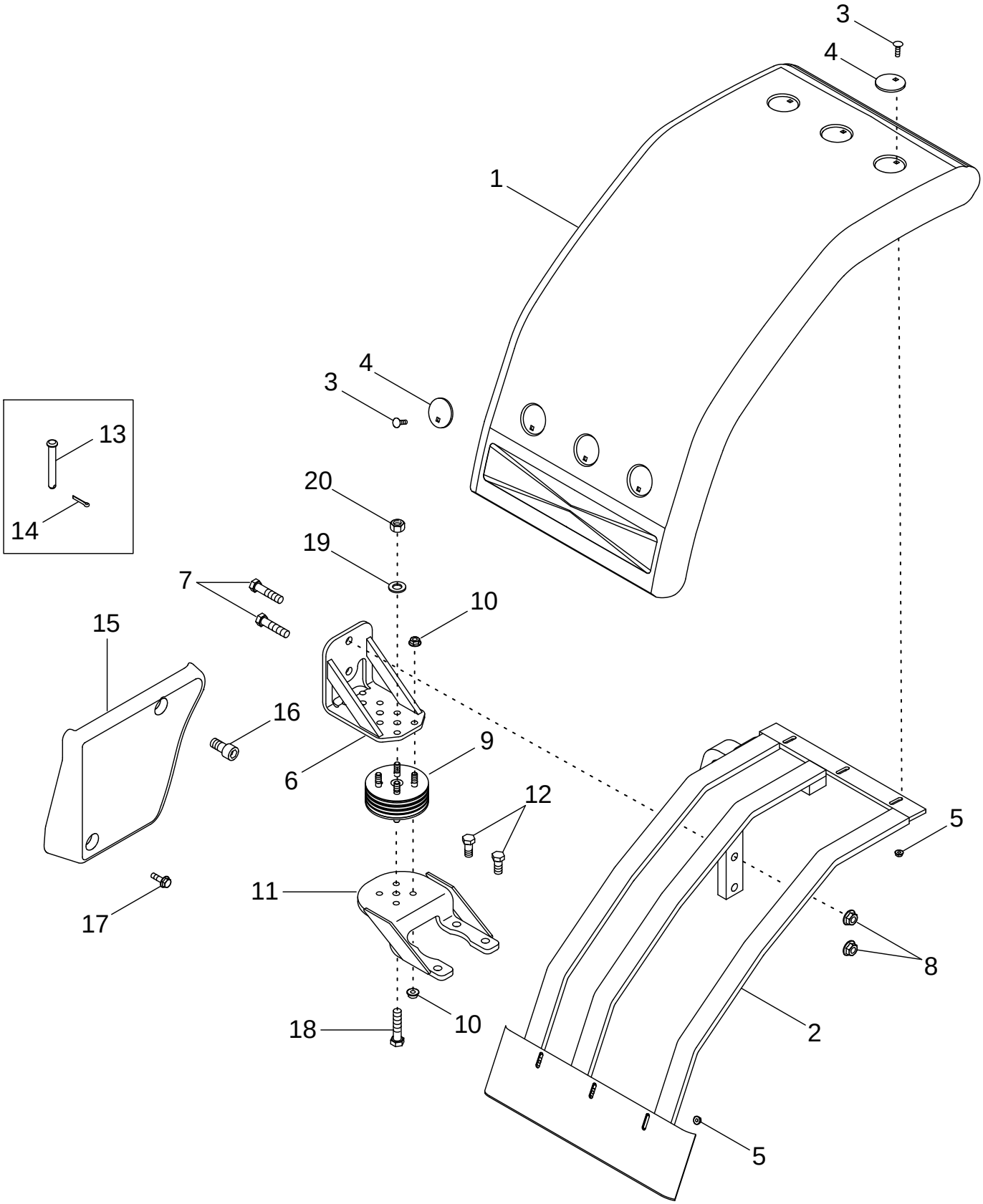

GUARDABARROS - DELANTERO, ANCHO
GUARDA-LAMAS DIANTEIROS - LARGOS
SPATBORDEN - VOORZIJDE, BREED
SKÆRME - FOR, BREDE

R	N	P.N.	MOD	Q	Description Denominacion	Descrizione Denominação	Description Beschrijving	Bezeichnung Beskrivelse	L.C.
	1	301437A	a	1	KIT Inc. 1 - 16 JEUGO	KIT JOGO	POCHETTE KIT	PACKUNG KIT	4830
	1	719687016	b	1	DIA KIT, ADDITIONAL PROD. Inc. 1 - 12, 15 - 20 DIA KIT,	DIA KIT, PRODOTTI ADD DIA KIT, ADD.PRODUCTS	DIA KIT, PRODUITS ADD DIA KIT, ADDITIONAL PR	NACHRÜST, ZUSÄTZLIC DIA KIT, ADD.PRODUCTS	100K
1		122212A1		2	FENDER 600 mm, Wide GUARDABARROS	PARAFANGO GUARDA LAMAS	GARDE-BOUE AFSCHERMING	KOTFLÜGEL SKÆRM	3180
2		244031A3		1	SUPPORT ASSY. Right Hand, Shown APOYADERO (CONJUNT	SUPPORTO, COMPLESS SUPORTE CONJUNTO	SUPPORT (ASSEMBLE) SUPPORT ASSY.	STUETZE (KPLT.) SUPPORT ASSY.	P427
2		244030A3		1	SUPPORT ASSY. Left Hand APOYADERO (CONJUNT	SUPPORTO, COMPLESS SUPORTE CONJUNTO	SUPPORT (ASSEMBLE) SUPPORT ASSY.	STUETZE (KPLT.) SUPPORT ASSY.	P427
3		612-6		12	SCREW M8 x 30; 4,6 TORNILLO	VITE PARAFUSO	VIS SCHROEF	SCHRAUBE SKRUE	7450
4		1340559C2		12	WASHER 2-1/2 ARANDELA	ROSETTA PIANA ANILHA	RONDELLE SLUITRING	SCHEIBE FLADSKIVE	9720
5		825-2408		12	NUT M8 TUERCA	DADO PORCA	ECROU MOER	MUTTER MØTRIK	5780
6		257560A4	a	2	SUPPORT APOYADERO	SUPPORTO SUPORTE	SUPPORT SUPPORT	STUETZE SUPPORT	8790
6		87427813	b	2	SUPPORT SOPORTE	SUPPORTO SUPORTE	SUPPORT STEUN	STÜTZE BESLAG	300S
7		827-16070		4	SCREW M16 x 70; 10.9 TORNILLO	VITE PARAFUSO	VIS SCHROEF	SCHRAUBE SKRUE	P136
8		825-51416		4	NUT M16 TUERCA	DADO PORCA	ECROU MOER	MUTTER MØTRIK	5780
9		226690A2		2	SHOCK ABSORBER AMORTIGUADOR	AMMORTIZZATORE AMORTECEDOR	AMORTISSEUR SCHOKDEMPER	STOSSDÄMPFER STOEDDAEMPER	036A
10		9804279		16	NUT M12 TUERCA	DADO PORCA	ECROU MOER	MUTTER MØTRIK	010D
11		426550A1	a	2	SUPPORT SOPORTE	SUPPORTO SUPORTE	SUPPORT STEUN	STÜTZE BESLAG	300S
11		87427814	b	2	SUPPORT SOPORTE	SUPPORTO SUPORTE	SUPPORT STEUN	STÜTZE BESLAG	300S
12		627-16040		8	SCREW M16 x 40; 10.9 TORNILLO	VITE PARAFUSO	VIS SCHROEF	SCHRAUBE SKRUE	7450
13		439-5860	a	2	PIN, HEADED 1/2 x 3-3/4 EJE CON CABEZA	PERNO CON TESTA PINO COM CABECA	AXE A TÊTE PIN, HEADED	KOPFSTIFT SPLIT MED HOVED	P888
14		432-1216	a	2	PIN, SPLIT (COTTER) 3/16 x 1 PASADOR ABIERTO	COPPIGLIA TROCO DE ABRIR	GOUPILLE SPLITPEN	SPLINT SPLITBOLT	P160
15		253850A1		1	BUMPER Right Hand, Shown PARACHOQUES	PARAURTI PARACHOQUES	PARE-CHOCS SCHOKDEMPER	STOSSTANGE KOFANGER	1120
15		255685A1		1	BUMPER Left Hand PARACHOQUES	PARAURTI PARACHOQUES	PARE-CHOCS SCHOKDEMPER	STOSSTANGE KOFANGER	1120

(1) Order From Machinery Price List
(a) BSN JAZ129994
(b) ASN JAZ129994

09-07		p2	05/04

FENDERS - FRONT, WIDE
PARAFANGHI - ANTERIORI, LARGHI
GARDE-BOUE AVANT, LARGES
VORDERE KOTFLÜGEL, BREIT

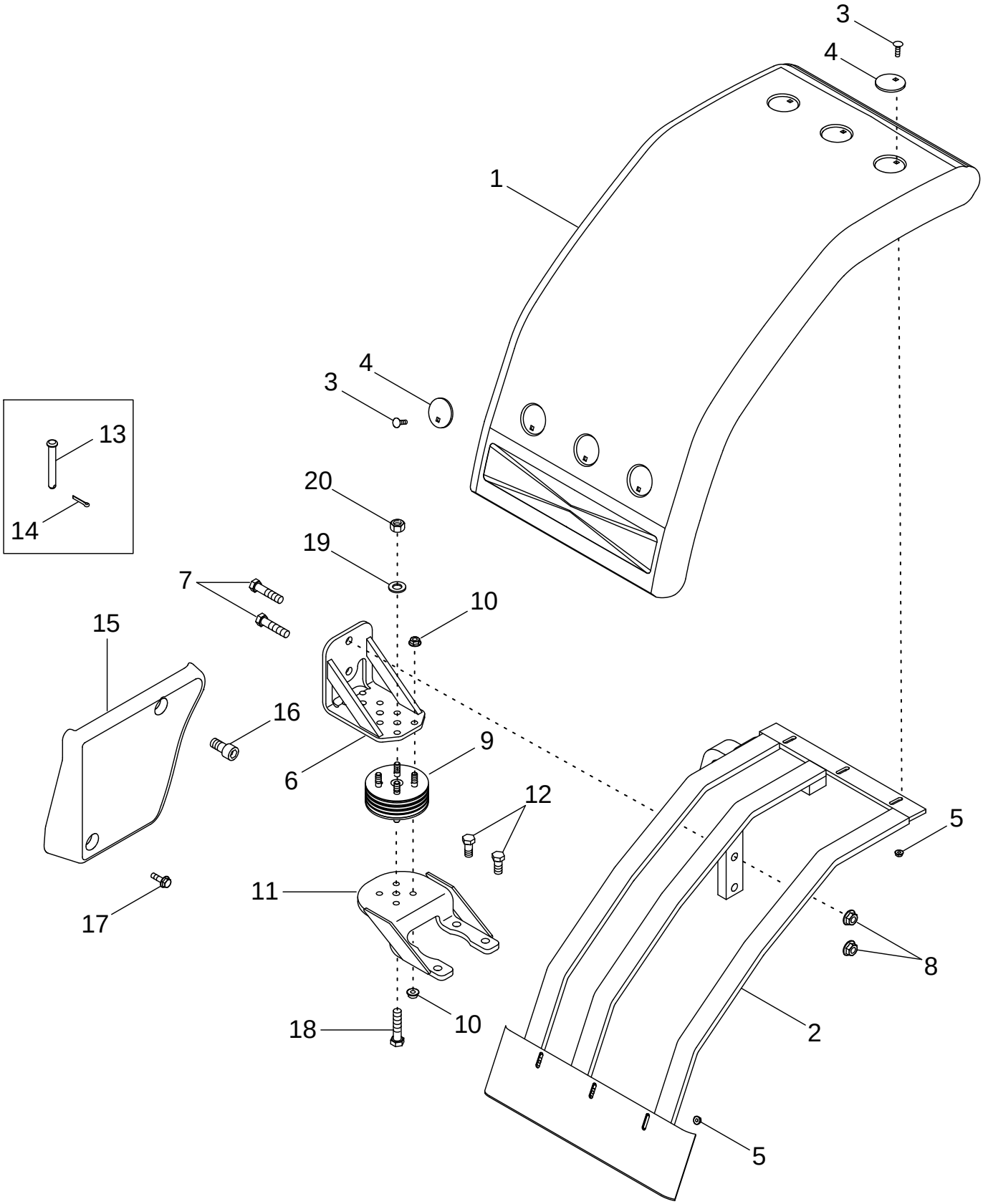

GUARDABARROS - DELANTERO, ANCHO
GUARDA-LAMAS DIANTEIROS - LARGOS
SPATBORDEN - VOORZIJDE, BREED
SKÆRME - FOR, BREDE

R	N	P.N.	MOD	Q	Description Denominacion	Descrizione Denominação	Description Beschrijving	Bezeichnung Beskrivelse	L.C.
16		565-111		2	SCREW M20 x 40 TORNILLO	VITE PARAFUSO	VIS SCHROEF	SCHRAUBE SKRUE	7450
17		555-6		2	SCREW M12 x 25; 8,8 TORNILLO	VITE PARAFUSO	VIS SCHROEF	SCHRAUBE SKRUE	7450
18		827-20100	a	2	SCREW M20 x 100; 10.9 TORNILLO	VITE PARAFUSO	VIS SCHROEF	SCHRAUBE SKRUE	7450
19		895-11020	a	2	WASHER 22 x 37 x 3 mm ARANDELA	ROSETTA PIANA ANILHA	RONDELLE SLUITRING	SCHEIBE FLADSKIVE	9720
20		832-10420	a	2	NUT M20 TUERCA	DADO PORCA	ECROU MOER	MUTTER MØTRIK	010D

(a) ASN JAZ129994

09-08		p1	12/02

FENDERS - REAR
PARAFANGHI - POSTERIORI
GARDE-BOUE ARRIÈRE
HINTERE KOTFLÜGEL

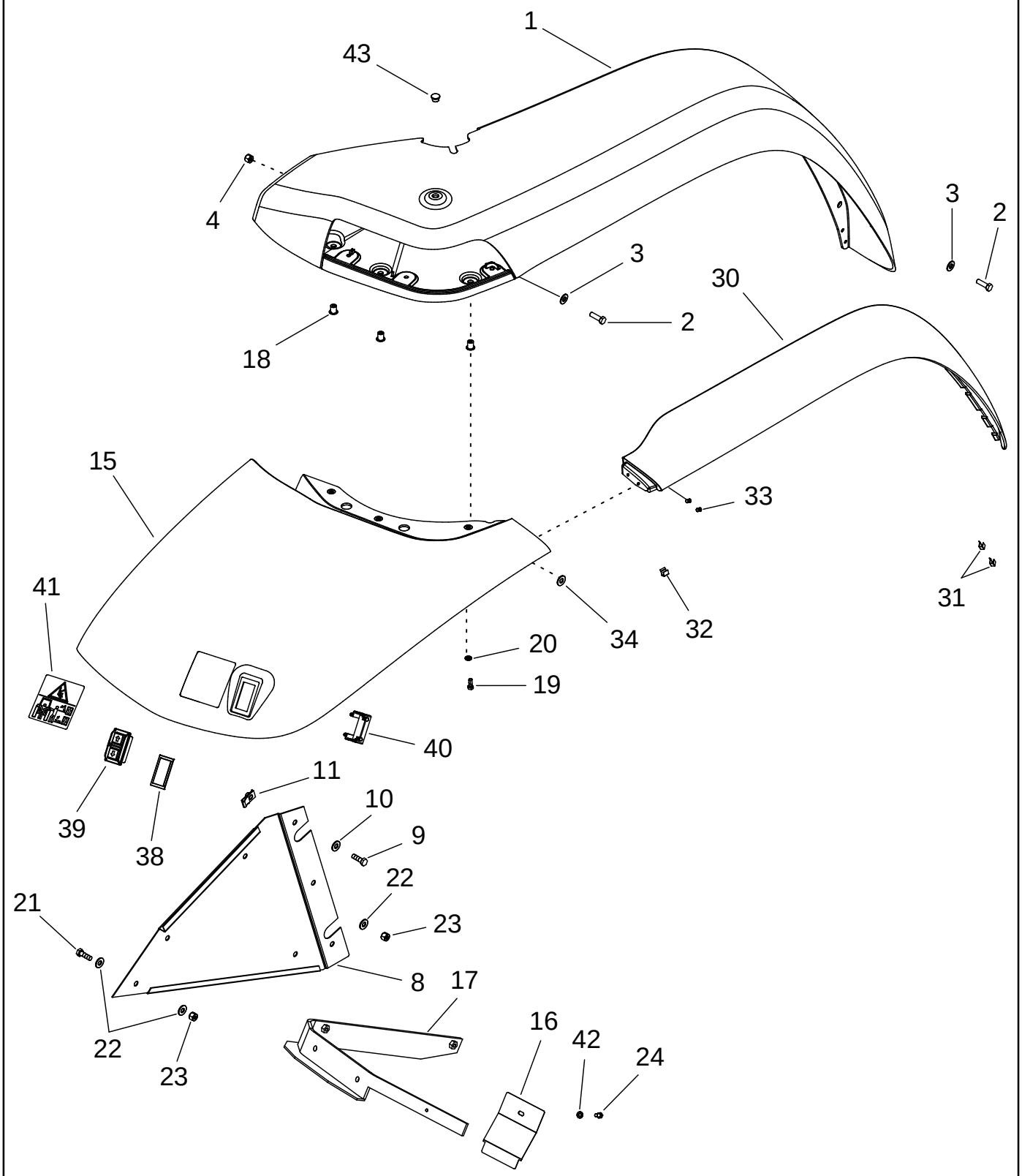

GUARDABARROS - TRASERO
GUARDA-LAMAS TRASEIROS
SPATBORDEN, ACHTER
SKÆRME - BAGESTE

R	N	P.N.	MOD	Q	Description Denominacion	Descrizione Denominação	Description Beschrijving	Bezeichnung Beskrivelse	L.C.
1		255130A3		1	DEFLECTOR, MUD Right Hand, Shown				
						DEFLETTORE, FANGO	GARDE-BOUE	SCHMUTZABWEISER	P844
					GUARDAFANGO	GUARDAFANGO	DEFLECTOR, MUD	MUDDERDEFLEKTOR	
1		255129A4		1	DEFLECTOR, MUD Left Hand				
						DEFLETTORE, FANGO	GARDE-BOUE	SCHMUTZABWEISER	P844
					GUARDAFANGO	GUARDAFANGO	DEFLECTOR, MUD	MUDDERDEFLEKTOR	
2		614-8025		14	SCREW M8 x 25; 8.8	VITE	VIS	SCHRAUBE	P136
					TORNILLO	PARAFUSO	SCHROEF	SKRUE	
3		895-15008		14	WASHER 9 x 20 x 1,6 mm	ROSETTA PIANA	RONDELLE	SCHEIBE	9720
					ARANDELA	ANILHA	SLUITRING	FLADSKIVE	
4		825-2408		2	NUT M8	DADO	ECROU	MUTTER	5780
					TUERCA	PORCA	MOER	MØTRIK	
8		295323A2		1	PLATE, LARGE Right Hand, Shown				
						PIASTRA, LARGA	PLAQUE, GRANDE	PLATTE, GROSS	Z308
					PLACA, GRANDE	PLACA ESPESSA	PLATE, LARGE	PLATE, LARGE	
8		295322A2		1	PLATE, LARGE Left Hand	PIASTRA, LARGA	PLAQUE, GRANDE	PLATTE, GROSS	Z308
					PLACA, GRANDE	PLACA ESPESSA	PLATE, LARGE	PLATE, LARGE	
9		614-8025		6	SCREW M8 x 25; 8.8	VITE	VIS	SCHRAUBE	P136
					TORNILLO	PARAFUSO	SCHROEF	SKRUE	
10		895-15008		6	WASHER 9 x 20 x 1,6 mm	ROSETTA PIANA	RONDELLE	SCHEIBE	9720
					ARANDELA	ANILHA	SLUITRING	FLADSKIVE	
11		833-41308		6	NUT M8	DADO	ECROU	MUTTER	5780
					TUERCA	PORCA	MOER	MØTRIK	
15		302364A2		1	EXTENSION Right Hand, Shown				
						PROLUNGA	RALLONGE	VERLÄNGERUNG	P416
					PROLONGACION	EXTENSAO	VERLENGSTUK	FORLÆNGNING	
15		302366A2		1	EXTENSION Left Hand	PROLUNGA	RALLONGE	VERLÄNGERUNG	P416
					PROLONGACION	EXTENSAO	VERLENGSTUK	FORLÆNGNING	
16		301720A2		2	COVER	COPERCHIO	COUVERCLE	DECKEL	2250
					TAPA	TAMPA	COVER	COVER	
17		335705A1		1	SUPPORT Right Hand, Shown				
						SUPPORTO	SUPPORT	STUETZE	8790
					APOYADERO	SUPORTE	SUPPORT	SUPPORT	
17		335704A1		1	SUPPORT Left Hand	SUPPORTO	SUPPORT	STUETZE	8790
					APOYADERO	SUPORTE	SUPPORT	SUPPORT	
18		302342A1		6	INSERT	INSERTO	INSERT	EINSATZ	4675
					INTRODUCTOR	POSTICO	TUSSENSTUK	INDSATS	
19		806-6020		6	BOLT M6 x 20; 10.9	BULLONE	BOULON	SCHAUBENBOLZEN	0810
					TORNILLO	PARAFUSO	BOUT	SKRUE	
20		895-15006		6	WASHER 6,6 x 25 x 1,6 mm	ROSETTA PIANA	RONDELLE	SCHEIBE	9720
					ARANDELA	ANILHA	SLUITRING	FLADSKIVE	
21		614-8025		6	SCREW M8 x 25; 8.8	VITE	VIS	SCHRAUBE	P136
					TORNILLO	PARAFUSO	SCHROEF	SKRUE	
22		895-15008		12	WASHER 9 x 20 x 1,6 mm	ROSETTA PIANA	RONDELLE	SCHEIBE	9720
					ARANDELA	ANILHA	SLUITRING	FLADSKIVE	
23		832-10408		4	NUT M8; 8	DADO	ECROU	MUTTER	010D
					TUERCA	PORCA	MOER	MØTRIK	
24		840-168		2	SCREW M6 x 8; 10.9	VITE	VIS	SCHRAUBE	7450
					TORNILLO	PARAFUSO	SCHROEF	SKRUE	

09-08		p2	12/02

FENDERS - REAR
PARAFANGHI - POSTERIORI
GARDE-BOUE ARRIÈRE
HINTERE KOTFLÜGEL

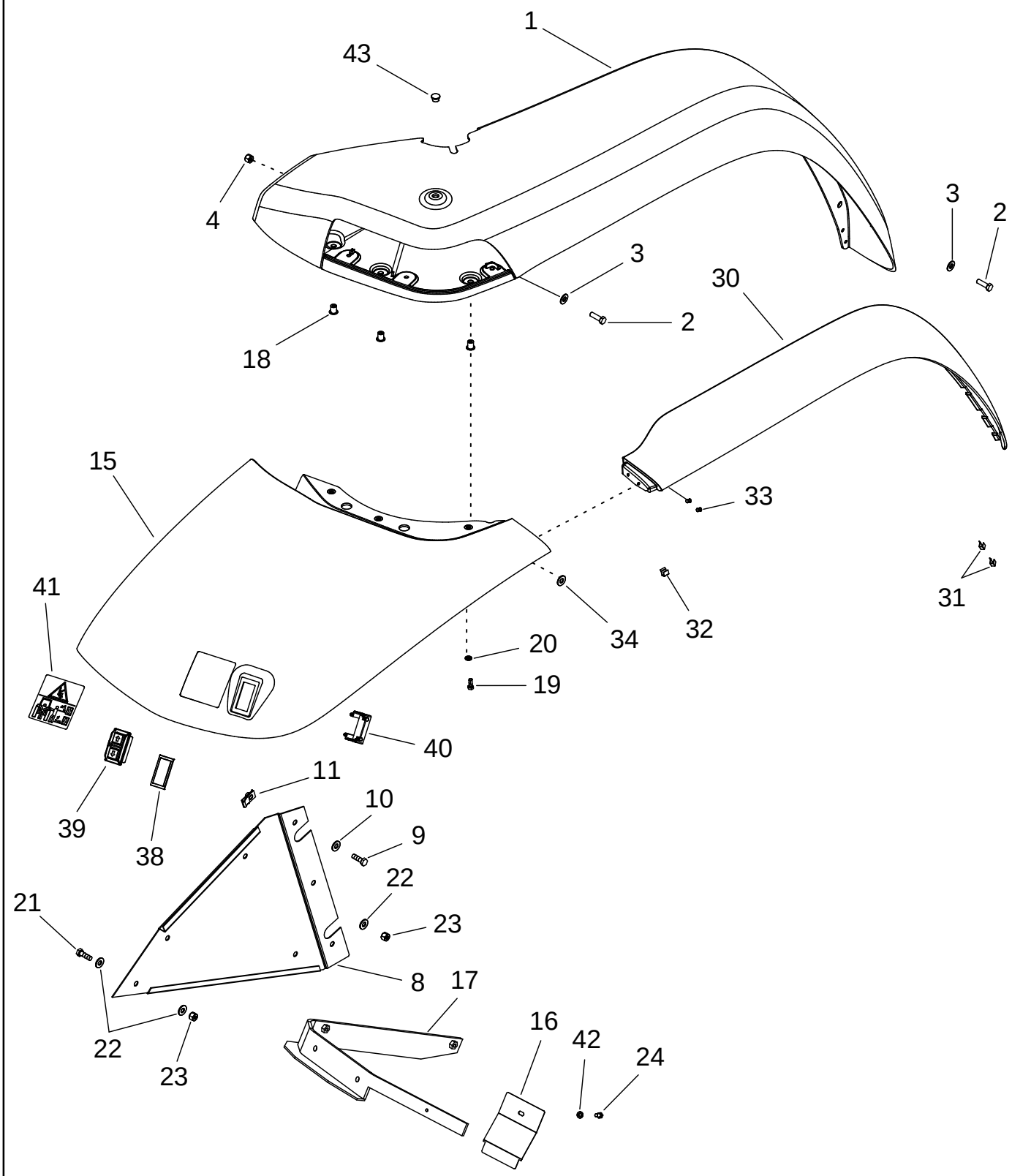

GUARDABARROS - TRASERO
GUARDA-LAMAS TRASEIROS
SPATBORDEN, ACHTER
SKÆRME - BAGESTE

R	N	P.N.	MOD	Q	Description Denominacion	Descrizione Denominação	Description Beschrijving	Bezeichnung Beskrivelse	L.C.
30		282623A2		1	EXTENSION Right Hand, Shown				
						PROLUNGA	RALLONGE	VERLÄNGERUNG	P416
					PROLONGACION	EXTENSAO	VERLENGSTUK	FORLÆNGNING	
30		282622A2		1	EXTENSION Left Hand	PROLUNGA	RALLONGE	VERLÄNGERUNG	P416
					PROLONGACION	EXTENSAO	VERLENGSTUK	FORLÆNGNING	
31		302404A1		4	CLIP, ELECTRICAL Short	FERMAGLIO, ELETTR.	CLIP	KABELSTECKSCHUH	Z327
					CLIP ELECTRICO	GRAMPO	CLIP, ELECTRICAL	CLIP, ELECTRICAL	
32		302405A1		18	CLIP, ELECTRICAL Long	FERMAGLIO, ELETTR.	CLIP	KABELSTECKSCHUH	Z327
					CLIP ELECTRICO	GRAMPO	CLIP, ELECTRICAL	CLIP, ELECTRICAL	
33		151-535		4	RIVET Pop, 1/8 x 15/32 incl	RIBATTINO	RIVET	NIET	7220
					REMACHE	REBITE	KLINKNAGEL	NITTE	
34		195-81035		4	WASHER	ROSETTA PIANA	RONDELLE	SCHEIBE	9720
					ARANDELA	ANILHA	SLUITRING	FLADSKIVE	
38		221654A1		2	PLUG Without Remote Hitch Switch				
						TAPPO	BOUCHON	STOPFEN	050T
					TAPÓN	BUJÃO	PLUG	PROP	
39		220415A2		2	SWITCH, REMOTE CONTROL Hitch Control				
						TELERUTTORE	TELERUPTEUR	FERNBEDIENUNGSSCH/	085T
					TELERRUPTOR	RELE	RELAIS	RELAE	
40		220416A2		2	CONNECTOR, ELECTRIC	CONNETTORE, ELETTR	FICHE	STOEPSEL	Z339
					TERMINAL	CONECTOR ELETRICO	CONNECTOR, ELECTRIC	CONNECTOR, ELECTRIC	
41		82030732		1	DECAL Right Hand, Shown	DECALCOMANIA	DECALCOMANIE	ABZIEHBILD	012D
					CALCOMANIA	DECALCOMANIA	DECAL	TRANSFER	
41		82030732		1	DECAL Left Hand	DECALCOMANIA	DECALCOMANIE	ABZIEHBILD	012D
					CALCOMANIA	DECALCOMANIA	DECAL	TRANSFER	
42		892-11006		2	WASHER, LOCK M6	ROSETTA DI SICUREZZ/	RONDELLE FREIN	SPRENGRING	132R
					ARANDELA DE FRENO	ANILHA DE FIXACAO	VEERRING	LAASESKIVE	
43		1533637C1		2	PLUG 12,5 mm	TAPPO	BOUCHON	STOPFEN	050T
					TAPÓN	BUJÃO	PLUG	PROP	

09-09		p1	12/02

FENDERS - REAR, EXTRA WIDE
PARAFANGHI - POSTERIORI, EXTRA LARGHI
GARDE-BOUE ARRIÈRE, EXTRA LARGES
VORDERE KOTFLÜGEL, EXTRABREIT

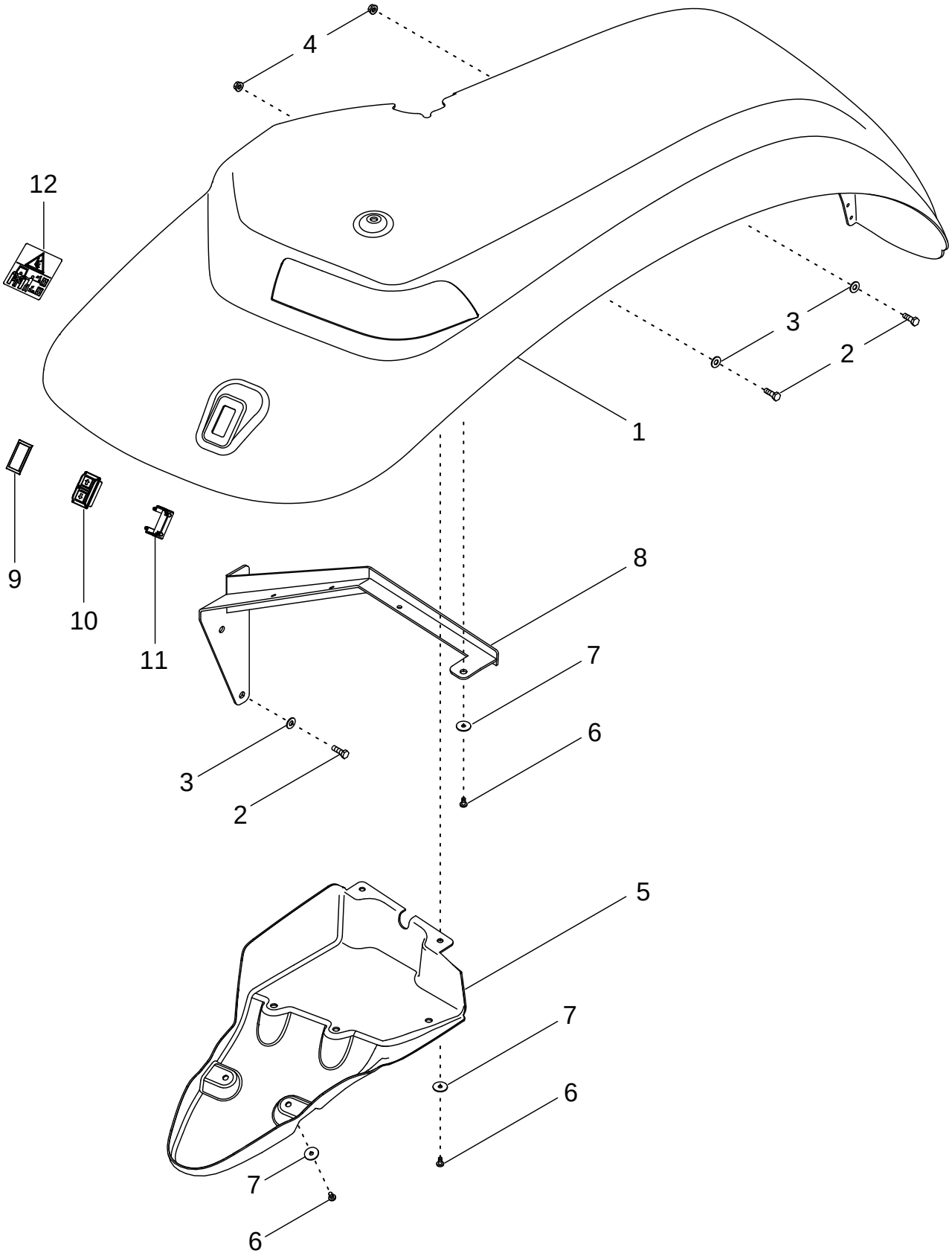

GUARDABARROS, TRASERO, EXTRA ANCHO
GUARDA LAMAS TRASEIROS - EXTRA LARGOS
SPATBORDEN, ACHTER, EXTRA BREED
SKÆRME - BAG, EKSTRABREDE

R	N	P.N.	MOD	Q	Description Denominacion	Descrizione Denominação	Description Beschrijving	Bezeichnung Beskrivelse	L.C.
1		450894A2		1	FENDER Right Hand, Shown				
						PARAFANGO	GARDE-BOUE	KOTFLÜGEL	040P
					GUARDABARROS	GUARDA LAMAS	AFSCHERMING	SKAERM	
1		450895A2		1	FENDER Left Hand	PARAFANGO	GARDE-BOUE	KOTFLÜGEL	040P
					GUARDABARROS	GUARDA LAMAS	AFSCHERMING	SKAERM	
2		614-8025		18	SCREW M8 x 25; 8.8	VITE	VIS	SCHRAUBE	P136
					TORNILLO	PARAFUSO	SCHROEF	SKRUE	
3		895-15008		18	WASHER 9 x 20 x 1,6 mm	ROSETTA PIANA	RONDELLE	SCHEIBE	9720
					ARANDELA	ANILHA	SLUITRING	FLADSKIVE	
4		825-2408		6	NUT M8	DADO	ECROU	MUTTER	5780
					TUERCA	PORCA	MOER	MØTRIK	
5		450896A2		1	HOUSING Right Hand, Shown				
						ALLOGGIAMENTO	CARTER	GEHÄUSE	014V
					CAVIDAD	ALOJAMENTO	HUIS	HUS	
5		450897A2		1	HOUSING Left Hand	ALLOGGIAMENTO	CARTER	GEHÄUSE	014V
					CAVIDAD	ALOJAMENTO	HUIS	HUS	
6		840-1620		10	SCREW M6 x 20; 4,8	VITE	VIS	SCHRAUBE	7450
					TORNILLO	PARAFUSO	SCHROEF	SKRUE	
7		895-15006		10	WASHER 6,6 x 25 x 1,6 mm	ROSETTA PIANA	RONDELLE	SCHEIBE	9720
					ARANDELA	ANILHA	SLUITRING	FLADSKIVE	
8		446342A1		1	SUPPORT Right Hand, Shown				
						SUPPORTO	SUPPORT	STÜTZE	300S
					SOPORTE	SUPORTE	STEUN	BESLAG	
8		446394A1		1	SUPPORT Left Hand	SUPPORTO	SUPPORT	STÜTZE	300S
					SOPORTE	SUPORTE	STEUN	BESLAG	

09-10		p1	12/02

HOOD TILTING
RIBALTAMENTO DEL COFANO
INCLINAISON DU CAPOT
SCHWENKBARE MOTORHAUBE

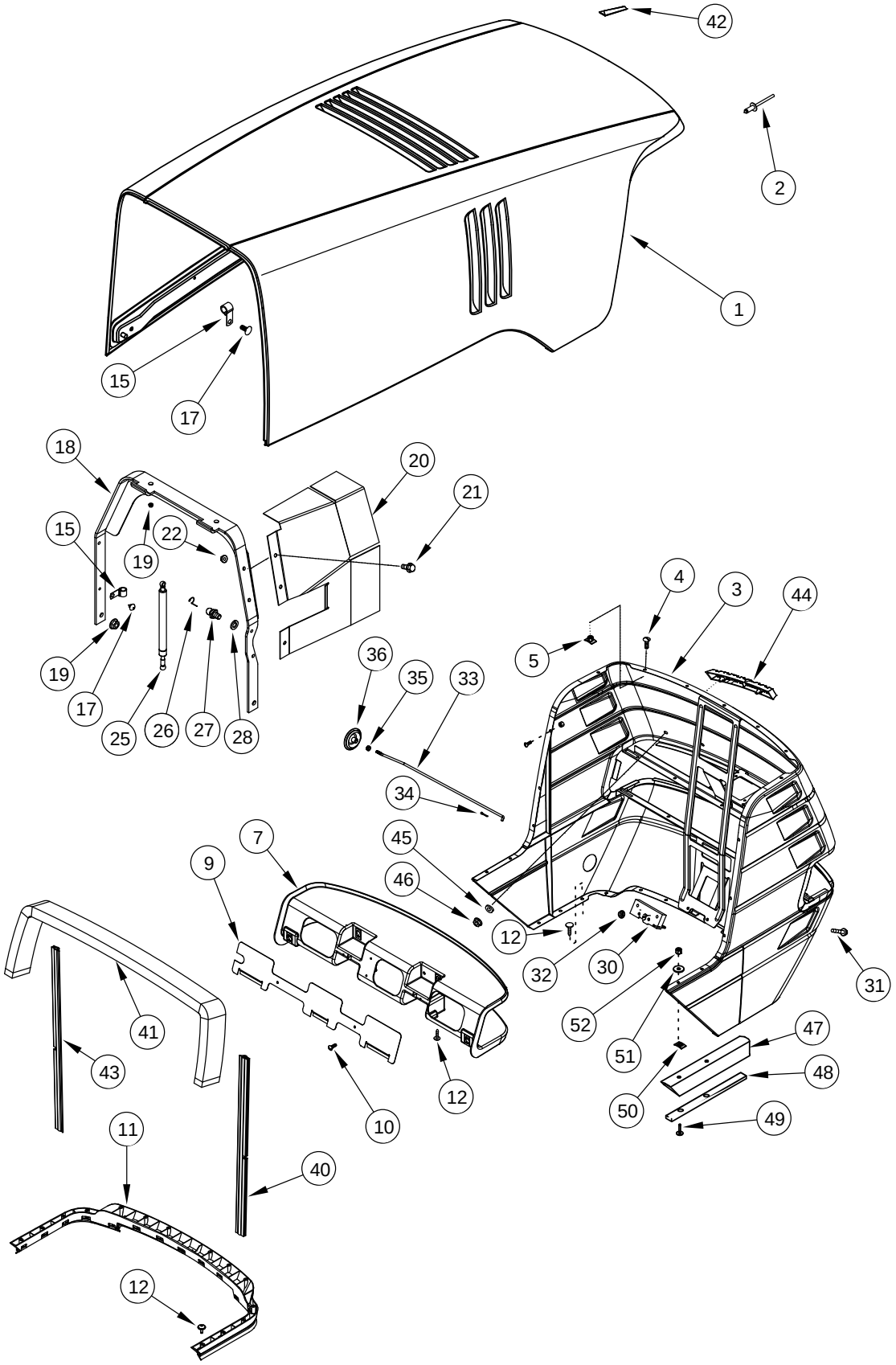

INCLINACIÓN DEL CAPÓ
CAPÔ INCLINÁVEL
KANTELING MOTORKAP
VIPNING AF KØLERHJELM

R	N	P.N.	MOD	Q	Description Denominacion	Descrizione Denominação	Description Beschrijving	Bezeichnung Beskrivelse	L.C.
1		86988161		1	HOOD ASSY. Inc. 2 CAPO DE MOTOR (CON.	GRUPPO COF., MOTORE CAPO CONJUNTO	CAPOT-MOTEUR HOOD ASSY.	MOTORHAUBE HOOD ASSY.	P600
2		151-539		4	RIVET Pop, 3/16 x 7/16 REMACHE	RIBATTINO REBITE	RIVET KLINKNAGEL	NIET NITTE	7220
3		389681A2		1	GRILLE CALANDRIA	MASCHERINA GRELHA	CALANDRE ROOSTER	GITTER GITTER	3980
4		104033C2		13	SCREW No. 10 x 3/4 TORNILLO	VITE PARAFUSO	VIS SCHROEF	SCHRAUBE SKRUE	040V
5		131-839		7	NUT No. 10 TUERCA	DADO PORCA	ECROU MOER	MUTTER MØTRIK	5780
6		131-833		6	NUT U TUERCA	DADO PORCA	ECROU MOER	MUTTER MØTRIK	5780
7		257466A2		1	GRILLE CALANDRIA	MASCHERINA GRELHA	CALANDRE ROOSTER	GITTER GITTER	3980
8		104033C2		2	SCREW No. 10 x 3/4 TORNILLO	VITE PARAFUSO	VIS SCHROEF	SCHRAUBE SKRUE	040V
9		257581A1		1	PLATE PLACA	PIASTRA CHAPA	PLAQUE PLAAT	PLATTE PLADE	105P
10		104033C2		2	SCREW No. 10 x 3/4 TORNILLO	VITE PARAFUSO	VIS SCHROEF	SCHRAUBE SKRUE	040V
11		408239A1		1	MOLDING MOLDURA	MODANATURA MOLDURA	MOULURE GIETSTUK	ZIERLEISTE STØBNING	5650
12		1975782C1		20	SCREW No.10 st x 5/8 TORNILLO	VITE PARAFUSO	VIS SCHROEF	SCHRAUBE SKRUE	040V
15		516-22127		7	CLAMP 1/2 ID COLLAR	MORSETTO BRACADEIRA	COLLIER CLAMP	SCHELLE CLAMP	1640
17		93199C1		5	FASTENER BOTON DE RESORTE	BOTTONE A SCATTO PARAFUSO	ATTACHE DRUKKNOP	SCHALTKNOPF UDLOESERKNAP	123B
18		252367A5		1	BRACE TENSOR	MENARUOLA TENSOR	JAMBE-DE-FORCE BRACE	STREBE BRACE	0990
19		829-1412		3	NUT M12; 10 TUERCA	DADO PORCA	ECROU MOER	MUTTER MØTRIK	5780
19		829-4312		1	NUT M12; 10 TUERCA	DADO PORCA	ECROU MOER	MUTTER MØTRIK	5780
20		251858A1		1	PROTECTION PLATE CHAPA PROTECCION	PIASTRA, PROTETTIVA CHAPA PROTE O	TOLE-PROTECTION SHIELD	SCHUTZBLECH SHIELD	Z647
21		844-8020		3	BOLT M8 x 20; 8.8 TORNILLO	BULLONE PARAFUSO	BOULON BOUT	SCHAUBENBOLZEN SKRUE	140B
22		825-2408		3	NUT M8 TUERCA	DADO PORCA	ECROU MOER	MUTTER MØTRIK	5780
25		252636A1		2	CYLINDER ASSY. CILINDRO (CONJUNTO)	CILINDRO, COMPLESS. CILINDRO CONJUNTO	VERIN CYLINDER ASSY.	ZYLINDER (KPLT.) CYLINDER ASSY.	P477
26		3233348R1		4	CLIP, ELECTRICAL CLIP ELECTRICO	FERMAGLIO, ELETTR. GRAMPO	CLIP CLIP, ELECTRICAL	KABELSTECKSCHUH CLIP, ELECTRICAL	Z327
27		3234063R1		4	BALL JOINT JUNTA DE ROTULA	GIUNTO SFERICO JUNTA ESFÉRICA	ROTULE KOGELGEWRICHT	KUGELGELENK KUGLELED	070G
28		892-11010		2	WASHER, LOCK M10 ARANDELA DE FRENO	ROSETTA DI SICUREZZA ANILHA DE FIXACAO	RONDELLE FREIN VEERRING	SPRENGRING LAASESKIVE	132R

09-10		p2	12/02

HOOD TILTING
RIBALTAMENTO DEL COFANO
INCLINAISON DU CAPOT
SCHWENKBARE MOTORHAUBE

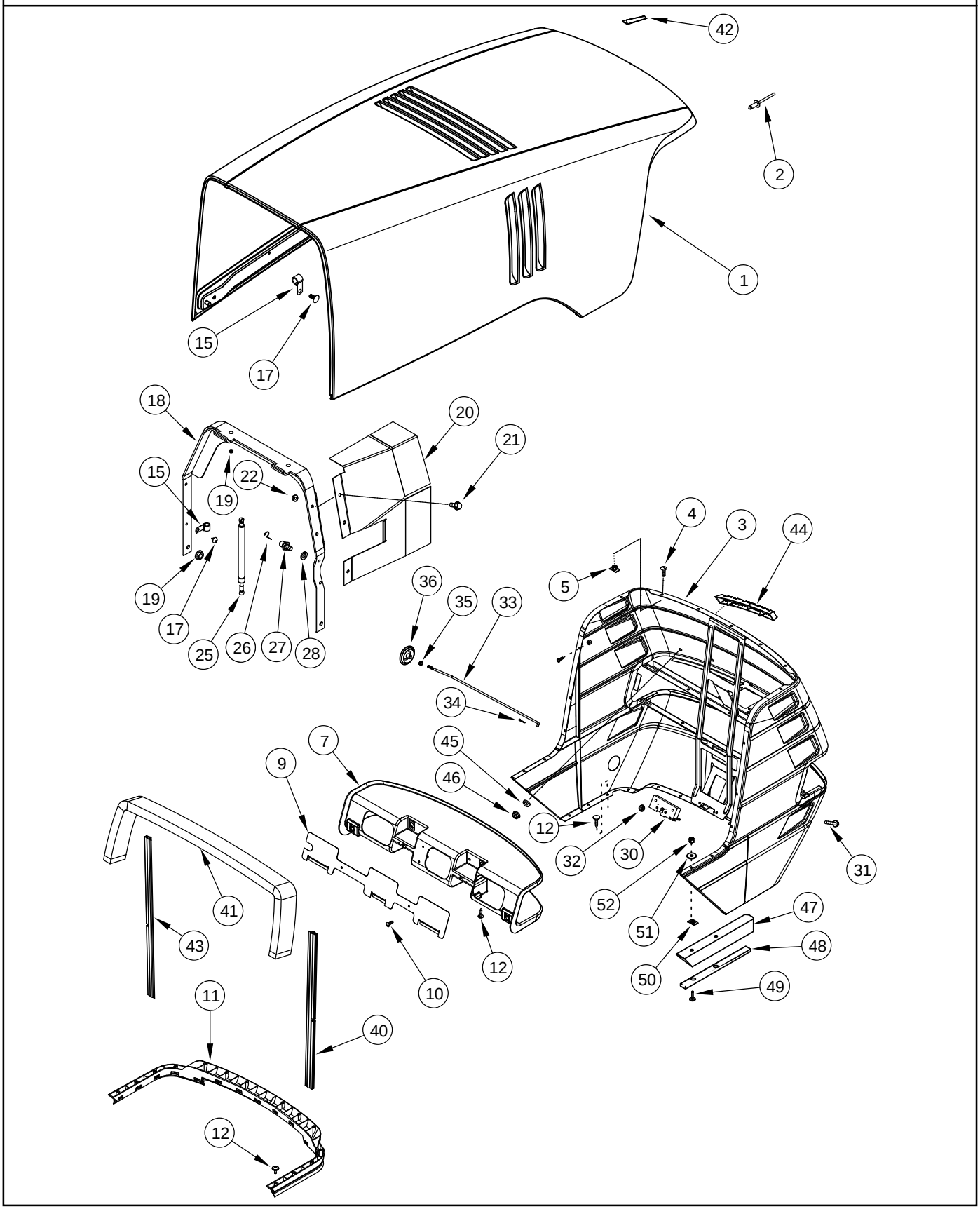

INCLINACIÓN DEL CAPÓ
CAPÔ INCLINÁVEL
KANTELING MOTORKAP
VIPNING AF KØLERHJELM

R	N	P.N.	MOD	Q	Description Denominacion	Descrizione Denominação	Description Beschrijving	Bezeichnung Beskrivelse	L.C.
30		R55002		1	LATCH PESTILLO	CHIAVISTELLO TRINCO	LOQUET KLINK	KLINKE PAL	5020
31		844-6035		2	SCREW M6 x 35; 8.8 TORNILLO	VITE PARAFUSO	VIS SCHROEF	SCHRAUBE SKRUE	7450
32		825-2406		2	NUT M6 TUERCA	DADO PORCA	ECROU MOER	MUTTER MØTRIK	5780
33		297958A2		1	ROD VARILLA	ASTA HASTE	TRINGLE STANG	STANGE STANG	090A
34		733-2512		1	PIN, SPLIT (COTTER) 2,5 x 12 mm PASADOR ABIERTO	COPPIGLIA TROCO DE ABRIR	GOUPILLE SPLITPEN	SPLINT SPLITBOLT	270C
35		829-1406		1	NUT M6; 10.9 TUERCA	DADO PORCA	ECROU MOER	MUTTER MØTRIK	010D
36		301222A1		1	BUTTON BOTON	BOTTONE BOTAO	BOUTON KNAP	KNOPF KNAP	1160
40		281158A1		1	SEAL ANILLO DE CIERRE	ANELLO DI TENUTA ANEL DE VEDACAO	JOINT DICHTINGSRING	DICHTUNG PAKNINGSRING	7460
41		281159A1		1	SEAL ANILLO DE CIERRE	ANELLO DI TENUTA ANEL DE VEDACAO	JOINT DICHTINGSRING	DICHTUNG PAKNINGSRING	7460
42		1968108C2		1	LINING REVESTEMIENTO	RIVESTIMENTO REVESTIMENTO	GARNITURE LINING	BELAG FORING	5260
43		308101A1		1	SEAL ANILLO DE CIERRE	ANELLO DI TENUTA ANEL DE VEDACAO	JOINT DICHTINGSRING	DICHTUNG PAKNINGSRING	7460
44		303520A2		1	SYMBOLS IDEOGRAMA	IDEOGRAMMI SIMBOLOS	SYMBOLE SYMBOLEN	SYMBOLE SYMBOLER	P829
45		316098A1		2	SPACER ESPACIADOR	DISTANZIALE ESPACADOR	ENTRETOISE AFSTANDSRING	DISTANZSTÜCK AFSTANDSSTYKKE	8090
46		825-5148		2	NUT M8; 8 TUERCA	DADO PORCA	ECROU MOER	MUTTER MØTRIK	5780
47		394774A1		1	GUIDE Right Hand, Shown GUIA	GUIDA GUIA	GUIDE GELEIDER	FÜHRUNG STYR	145G
47		394773A1		1	GUIDE Left Hand GUIA	GUIDA GUIA	GUIDE GELEIDER	FÜHRUNG STYR	145G
48		394438A1		1	PLATE, BACK PLACA DORSAL	PIASTRA, POSTERIORE PLACA DORSAL	PLAQUE DORSALE PLATE, BACK	RÜCKPLATTE BAGPLADE	P641
49		395764A1		4	BOLT, SPECIAL PERNO ESPECIAL	BULLONE SPECIALE PARAFUSO ESPECIAL	BOULON SPECIAL BOLT, SPECIAL	SPEZIALSCHRAUBE BOLT, SPECIAL	P698
50		131-887		2	NUT 5/32 TUERCA	DADO PORCA	ECROU MOER	MUTTER MØTRIK	5780
51		895-30108		4	WASHER 4,4 x 15 x 1,2 mm ARANDELA	ROSETTA PIANA ANILHA	RONDELLE SLUITRING	SCHEIBE FLADSKIVE	9720
52		832-10404		4	NUT M4; 8 TUERCA	DADO PORCA	ECROU MOER	MUTTER MØTRIK	5780

09-11		p1	12/02

FAN SHIELDS
PROTEZIONI DEL VENTILATORE
GARANTS DU VENTILATEUR
GEBLÄSEABDECKUNGEN

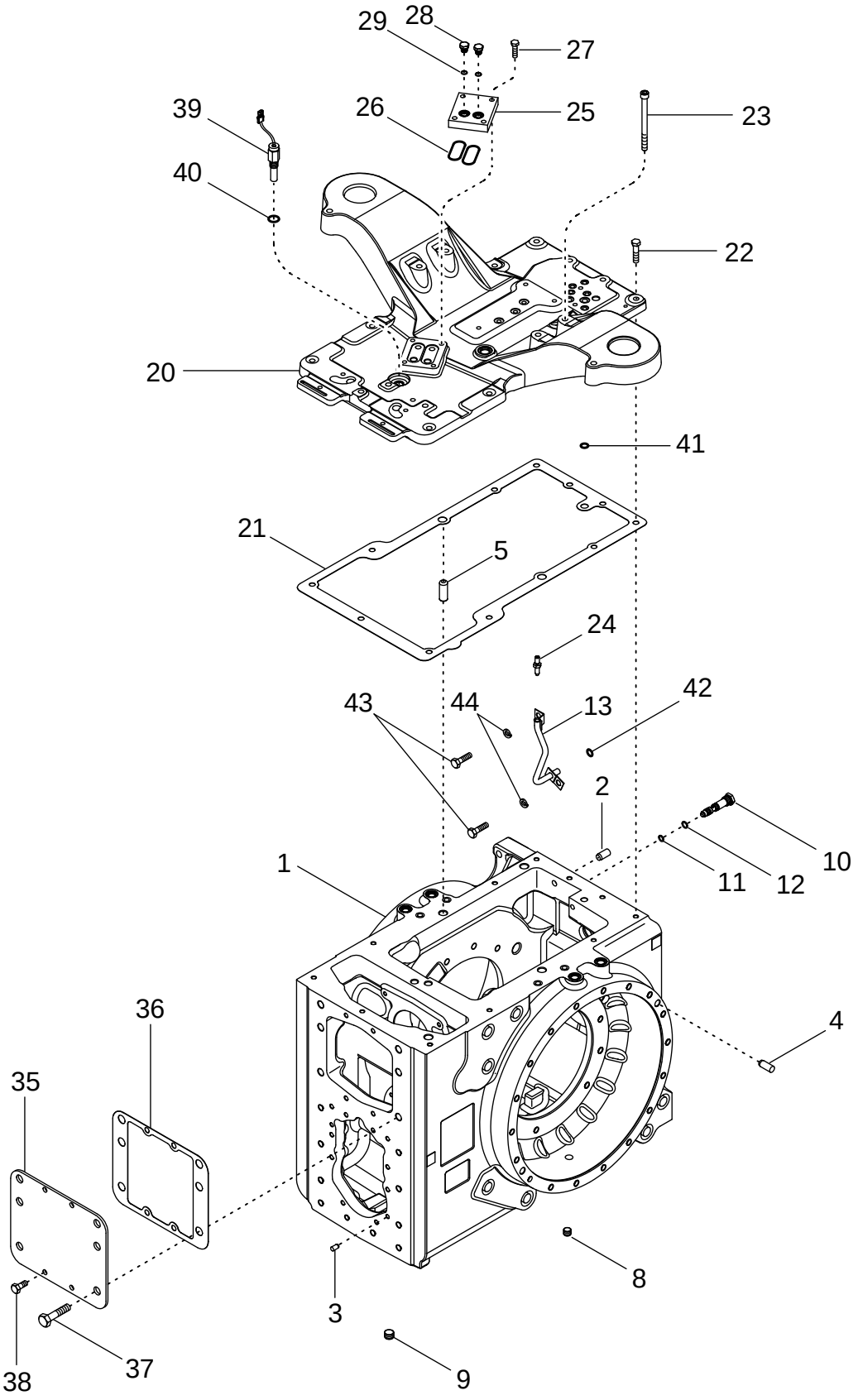

PROTECTORES DEL VENTILADOR
PROTECÇÕES DA VENTOINHA
VENTILATORSCHERMEN
VENTILATORSKÆRME

R	N	P.N.	MOD	Q	Description Denominacion	Descrizione Denominação	Description Beschrijving	Bezeichnung Beskrivelse	L.C.
1		258610A4		1	PANEL ASSY. Right Hand, Inc. 3				
						PANNELLO, COMPL	PANNEAU (ASSEMBLE)	ARMATURENBRETT (KPI	P535
					ENTREPANO (CONJUNT	PAINEL CONJUNTO	PANEL ASSY.	PANEL ASSY.	
2		258608A4		1	PANEL ASSY. Left Hand, Inc. 3				
						PANNELLO, COMPL	PANNEAU (ASSEMBLE)	ARMATURENBRETT (KPI	P535
					ENTREPANO (CONJUNT	PAINEL CONJUNTO	PANEL ASSY.	PANEL ASSY.	
3		86990119		4	STUD	PRIGIONIERO	GOUJON	STEHBOLZEN	210P
					PRISIONERO	PERNE	TAPEIND	STOETTEBOLT	
4		555-1		6	SCREW M8 x 16	VITE	VIS	SCHRAUBE	040V
					TORNILLO	PARAFUSO	SCHROEF	SKRUE	
5		258248A2		2	PLATE, LARGE	PIASTRA, LARGA	PLAQUE, GRANDE	PLATTE, GROSS	Z308
					PLACA, GRANDE	PLACA ESPESSA	PLATE, LARGE	PLATE, LARGE	
6		825-2406		4	NUT M6	DADO	ECROU	MUTTER	5780
					TUERCA	PORCA	MOER	MØTRIK	
7		1348465C1		2	STUD	PRIGIONIERO	GOUJON	STIFTSCHRAUBE	8720
					PRISIONERO	PERNE	TAPEIND	STOETTEBOLT	
8		463-61010		2	SCREW No. 10 x 5/8	VITE	VIS	SCHRAUBE	7450
					TORNILLO	PARAFUSO	SCHROEF	SKRUE	
9		493-21020		2	WASHER, LOCK 3/16	ROSETTA DI SICUREZZA	RONDELLE FREIN	SPRENGRING	132R
					ARANDELA DE FRENO	ANILHA DE FIXACAO	VEERRING	LAASESKIVE	
10		1968039C3		2	FASTENER	BOTTONE A SCATTO	ATTACHE	SCHALTKNOPF	123B
					BOTON DE RESORTE	PARAFUSO	DRUKKNOP	UDLOESERKNAP	
11		260-5448		4	SCREW No. 8 x 1/2	VITE	VIS	SCHRAUBE	7450
					TORNILLO	PARAFUSO	SCHROEF	SKRUE	
12		86984029		1	PLATE Right Hand	PIASTRA	PLAQUE	PLATTE	105P
					PLACA	CHAPA	PLAAT	PLADE	
13		86984040		1	PLATE Left Hand	PIASTRA	PLAQUE	PLATTE	105P
					PLACA	CHAPA	PLAAT	PLADE	
14		86984032		1	SUPPORT ASSY. Right Hand				
						SUPPORTO, COMPLESS	SUPPORT (ASSEMBLE)	STUETZE (KPLT.)	P427
					APOYADERO (CONJUNT	SUPORTE CONJUNTO	SUPPORT ASSY.	SUPPORT ASSY.	
15		87404252		1	BRACKET Left Hand	STAFFA	PATTE FIXATION	HALTERUNG	225S
					PIEZA DE SOPORTE	BRACADEIRA	STEUNBEUGEL	BESLAG	

09-12		p1	12/02

HOOD FIXED
COFANO FISSO
CAPOT FIXÉ
FIXIERTE MOTORHAUBE

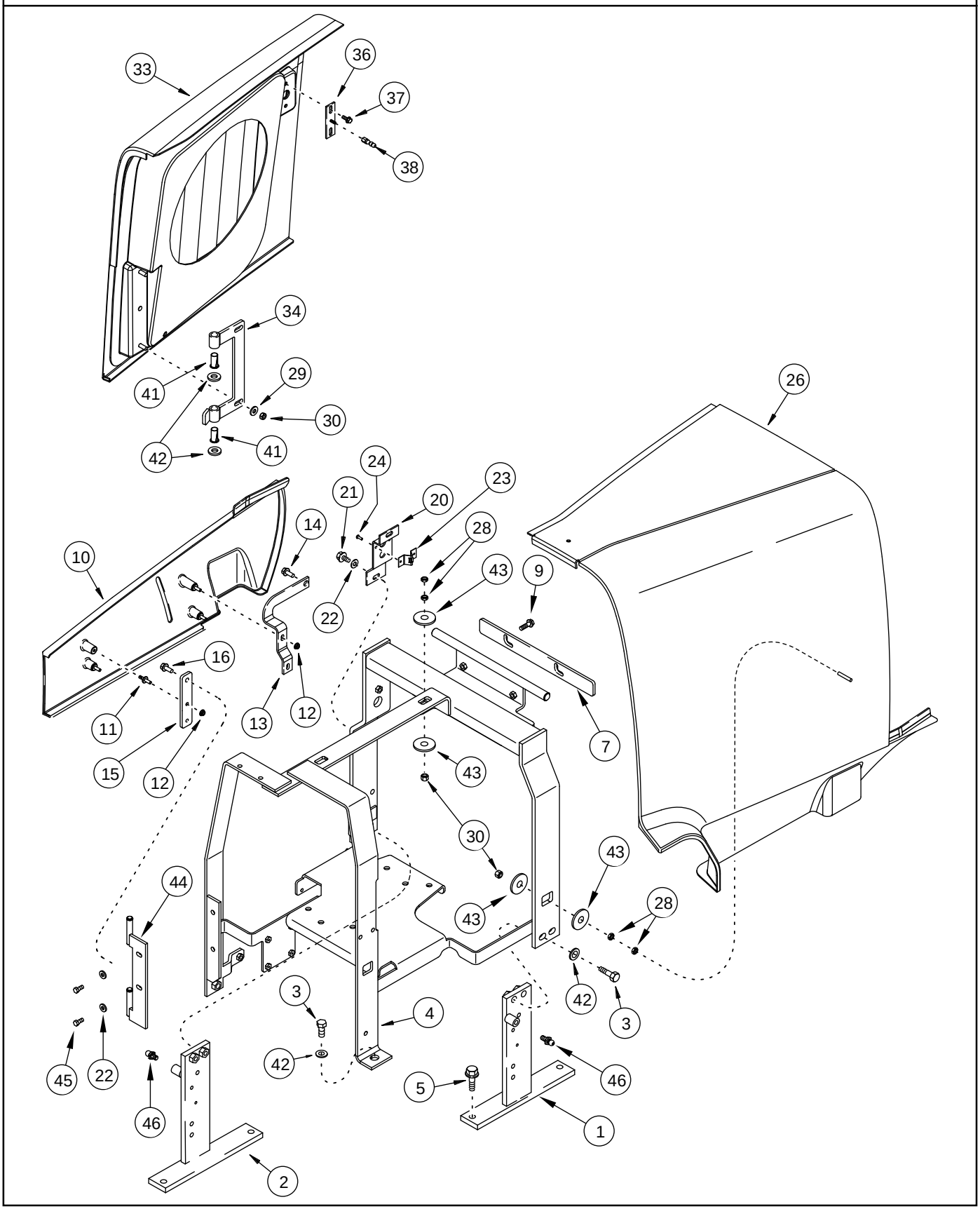

CAPÓ FIJO
CAPÔ FIXO
MOTORKAP VAST
MOTORHJELM FASTGJORT

R	N	P.N.	MOD	Q	Description Denominacion	Descrizione Denominação	Description Beschrijving	Bezeichnung Beskrivelse	L.C.
1		367683A1		1	BRACKET Right Hand PIEZA DE SOPORTE	STAFFA SUPORTE	PATTE FIXATION STEUNBEUGEL	HALTERUNG BESLAG	1010
2		367684A1		1	BRACKET Left Hand PIEZA DE SOPORTE	STAFFA SUPORTE	PATTE FIXATION STEUNBEUGEL	HALTERUNG BESLAG	1010
3		614-12030		6	SCREW M12 x 30; 8.8 TORNILLO	VITE PARAFUSO	VIS SCHROEF	SCHRAUBE SKRUE	P136
4		442844A2		1	SUPPORT ASSY. APOYADERO (CONJUNT	SUPPORTO, COMPLESS SUPORTE CONJUNTO	SUPPORT (ASSEMBLE) SUPPORT ASSY.	STUETZE (KPLT.) SUPPORT ASSY.	P427
5		854-12035		4	SCREW M12 x 35; 10.9 TORNILLO	VITE PARAFUSO	VIS SCHROEF	SCHRAUBE SKRUE	7450
7		248802A2		1	BAR BARRA	BARRA BARRA	BARRE STAAF	STAB BJÆKE	0500
9		844-8020		2	BOLT M8 x 20; 8.8 TORNILLO	BULLONE PARAFUSO	BOULON BOUT	SCHAUBENBOLZEN SKRUE	140B
10		254031A4		1	PANEL, SIDE Inc. 11 PANEL LATERAL	FIANCHETTO PAINEL LATERAL	PANNEAU LATÉRAL ZIJWAND	SEITENBLECH SIDEPANEL	P772
11		86990119		4	STUD PRISIONERO	PRIGIONIERO PERNE	GOUJON TAPEIND	STEHBOLZEN STOETTEBOLT	210P
12		825-2406		4	NUT M6 TUERCA	DADO PORCA	ECROU MOER	MUTTER MØTRIK	5780
13		241791A3		1	BRACKET PIEZA DE SOPORTE	STAFFA SUPORTE	PATTE FIXATION STEUNBEUGEL	HALTERUNG BESLAG	1010
14		844-8020		1	BOLT M8 x 20; 8.8 TORNILLO	BULLONE PARAFUSO	BOULON BOUT	SCHAUBENBOLZEN SKRUE	140B
15		297957A2		1	BRACKET PIEZA DE SOPORTE	STAFFA SUPORTE	PATTE FIXATION STEUNBEUGEL	HALTERUNG BESLAG	1010
16		844-8020		1	BOLT M8 x 20; 8.8 TORNILLO	BULLONE PARAFUSO	BOULON BOUT	SCHAUBENBOLZEN SKRUE	140B
20		252293A2		1	SUPPORT APOYADERO	SUPPORTO SUPORTE	SUPPORT SUPPORT	STUETZE SUPPORT	8790
21		844-8020		2	BOLT M8 x 20; 8.8 TORNILLO	BULLONE PARAFUSO	BOULON BOUT	SCHAUBENBOLZEN SKRUE	140B
22		895-15008		6	WASHER 9 x 20 x 1,6 mm ARANDELA	ROSETTA PIANA ANILHA	RONDELLE SLUITRING	SCHEIBE FLADSKIVE	9720
23		1968039C3		1	FASTENER BOTON DE RESORTE	BOTTONE A SCATTO PARAFUSO	ATTACHE DRUKKNOP	SCHALTKNOPF UDLOESERKNAP	123B
24		260-5448		2	SCREW No. 8 x 1/2 TORNILLO	VITE PARAFUSO	VIS SCHROEF	SCHRAUBE SKRUE	7450
26		277303A5		1	PANEL CONTRAPANEL	PANNELLO PAINEL	PANNEAU PANEELWERK	TAFEL PANEL	6070
28		829-4408		8	NUT M8 TUERCA	DADO PORCA	ECROU MOER	MUTTER MØTRIK	5780
29		896-15008		8	WASHER 9 x 21 x 2,5 mm ARANDELA	ROSETTA PIANA ANILHA	RONDELLE SLUITRING	SCHEIBE FLADSKIVE	9720
30		829-1408		6	NUT M8; 10 TUERCA	DADO PORCA	ECROU MOER	MUTTER MØTRIK	010D
33		252114A3		1	PANEL, SIDE PANEL LATERAL	FIANCHETTO PAINEL LATERAL	PANNEAU LATÉRAL ZIJWAND	SEITENBLECH SIDEPANEL	P772

09-12		p2	12/02

HOOD FIXED
COFANO FISSO
CAPOT FIXÉ
FIXIERTE MOTORHAUBE

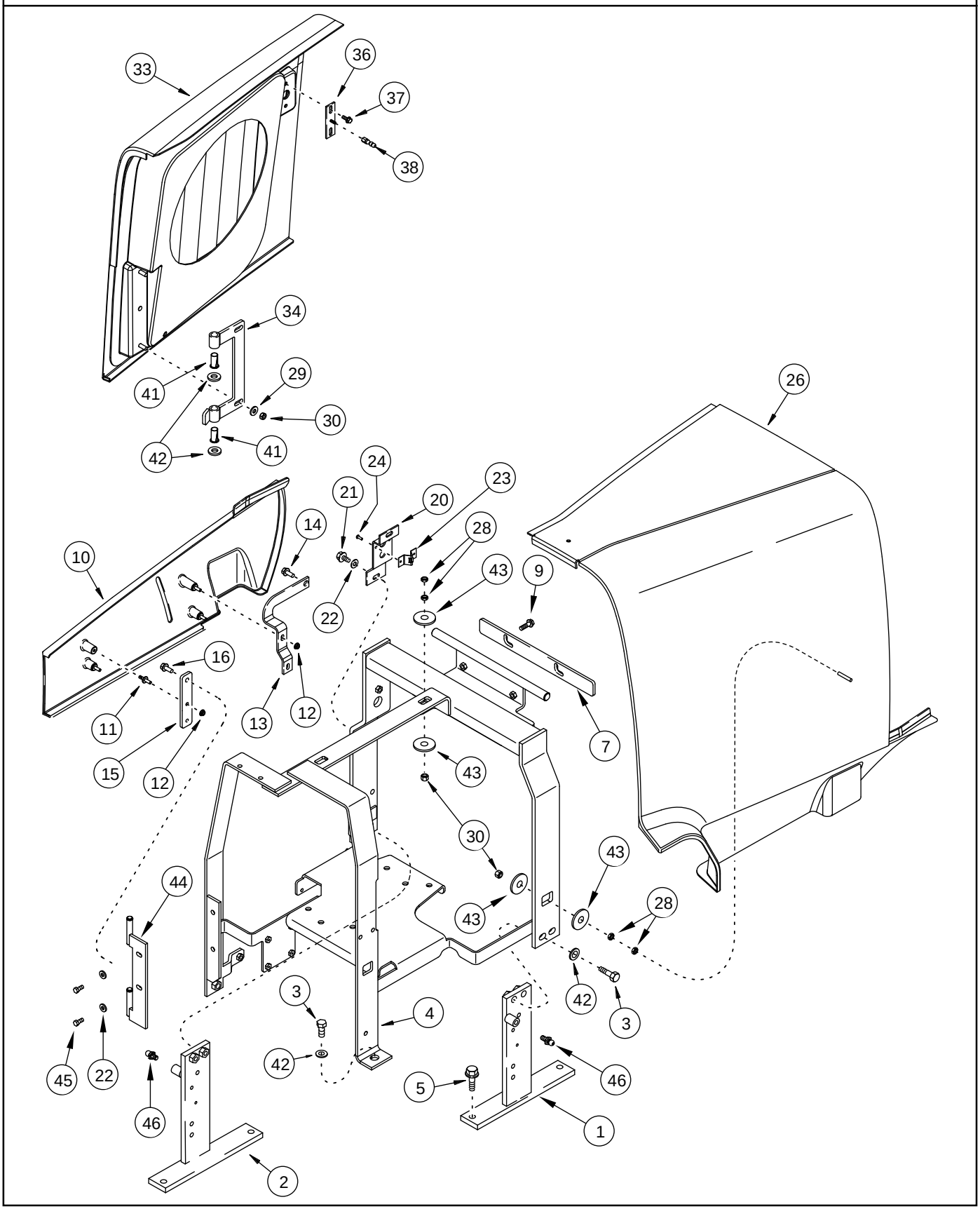

CAPÓ FIJO
CAPÔ FIXO
MOTORKAP VAST
MOTORHJELM FASTGJORT

R	N	P.N.	MOD	Q	Description Denominacion	Descrizione Denominação	Description Beschrijving	Bezeichnung Beskrivelse	L.C.
34		251649A2		1	PLATE PLACA	PIASTRA CHAPA	PLAQUE PLAAT	PLATTE PLADE	105P
36		448715A1		1	PLATE PLACA	PIASTRA CHAPA	PLAQUE PLAAT	PLATTE PLADE	105P
37		844-6016		2	SCREW M6 x 16; 8.8 TORNILLO	VITE PARAFUSO	VIS SCHROEF	SCHRAUBE SKRUE	P136
38		448713A1		1	STUD PRISIONERO	PRIGIONIERO PERNE	GOUJON TAPEIND	STEHBOLZEN STOETTEBOLT	210P
41		236998A1		2	COUPLING ELEMENTO DE ACOPLAI	TESTA A CAMPANA ELEMENTO DE ACOPLAI	CHAPE KOPPELING	ANKOPPLUNG KOBLING	P529
42		896-15012		6	WASHER 13,5 x 28 x 4 mm ARANDELA	ROSETTA PIANA ANILHA	RONDELLE SLUITRING	SCHEIBE FLADSKIVE	9720
43		T101398		8	WASHER ARANDELA	ROSETTA PIANA ANILHA	RONDELLE SLUITRING	SCHEIBE FLADSKIVE	9720
44		302896A2		1	HINGE BISAGRA	CERNIERA DOBRADICA	PAUMELLE HINGE	SCHARNIER HINGE	Z579
45		614-8025		4	SCREW M8 x 25; 8.8 TORNILLO	VITE PARAFUSO	VIS SCHROEF	SCHRAUBE SKRUE	P136
46		3234063R1		2	BALL JOINT JUNTA DE ROTULA	GIUNTO SFERICO JUNTA ESFÉRICA	ROTULE KOGELGEWRICHT	KUGELGELENK KUGLELED	070G

09-13		p1	08/04

CAB - MOUNTING AND FRAME, BSN AJB0355923
CABINA - SUPPORTO E TELAIO, BSN AJB0355923
CABINE - MONTANTS ET CHÂSSIS, BSN AJB0355923
KABINENBEFESTIGUNG UND -RAHMEN, BSN AJB0355923

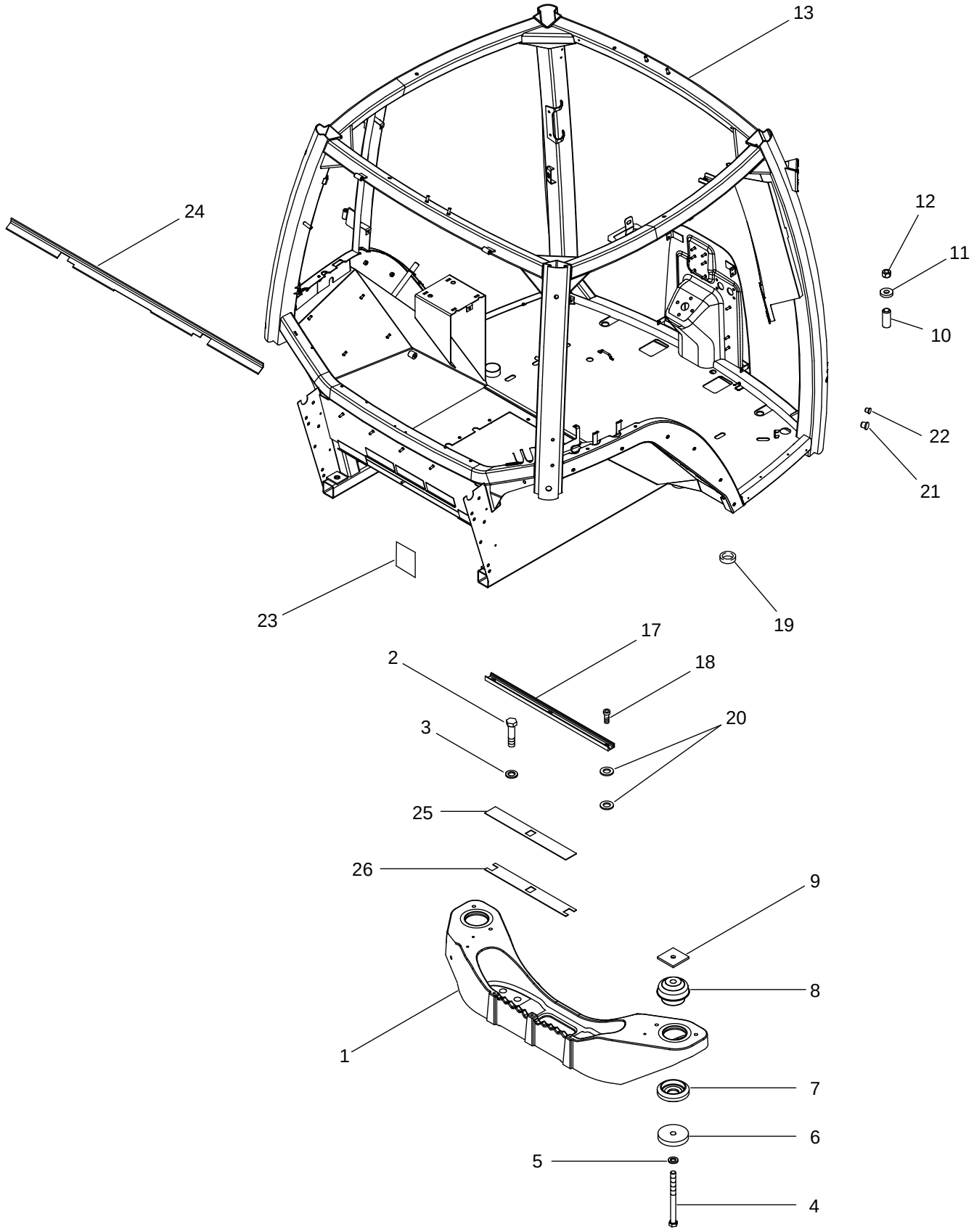

CABINA - MONTAJE Y CHASIS, BSN AJB0355923
SUPORTES E ARMAÇÃO DA CABINA, BSN AJB0355923
CABINE - BEVESTIGING EN FRAME, BSN AJB0355923
FØRERHUS - OPHÆNG OG CHASSISRAMME, BSN AJB0355923

R	N	P.N.	MOD	Q	Description Denominacion	Descrizione Denominação	Description Beschrijving	Bezeichnung Beskrivelse	L.C.
1		255238A4		1	BRACKET PIEZA DE SOPORTE	STAFFA BRACADEIRA	PATTE FIXATION STEUNBEUGEL	HALTERUNG BESLAG	225S
2		828-20080		8	SCREW M20 x 80; 10.9 TORNILLO	VITE PARAFUSO	VIS SCHROEF	SCHRAUBE SKRUE	7450
3		896-12020		8	WASHER 22 x 37 x 4 mm ARANDELA	ROSETTA PIANA ANILHA	RONDELLE SLUITRING	SCHEIBE FLADSKIVE	9720
4		86987599		4	BOLT TORNILLO	BULLONE PARAFUSO	BOULON BOUT	SCHAUBENBOLZEN SKRUE	140B
5		896-11016		2	WASHER 17,5 x 30 x 4 mm, Front Mount ARANDELA	ROSETTA PIANA ANILHA	RONDELLE SLUITRING	SCHEIBE FLADSKIVE	9720
6		178658A1		4	SPACER 16 mm SEPARADOR	DISTANZIALE ESPACADOR	ENTRETOISE AFSTANDSRING	DISTANZSTÜCK AFSTANDSSTYKKE	075D
7		1286903C1		4	INSULATOR BLOCK Botton PLOT DE SUSPENSIÓN	TASSELLO ELASTICO PLOT DE SUSPENSIÓN	PLOT SUSPENSION RUBBEREN BLOK	DÄMPFUNGSBLOCK ISOLATORBLOK	061T
8		192337A1		4	BLOCK, INSULATING Top PIEZA AISLADORA	BLOCCHETTO ISOLANTE BLOCO ISOLADOR	BLOC ISOLANT ISOLATIEBLOK	ISOLIERBLOCK ISOLERINGSBLOK	076B
9		86985936		4	PLATE PLACA	PIASTRA CHAPA	PLAQUE PLAAT	PLATTE PLADE	105P
10		184262A1		4	SPACER SEPARADOR	DISTANZIALE ESPACADOR	ENTRETOISE AFSTANDSRING	DISTANZSTÜCK AFSTANDSSTYKKE	075D
11		897278H1		4	WASHER ARANDELA	ROSETTA PIANA ANILHA	RONDELLE SLUITRING	BEILAGSCHEIBE FLADSKIVE	131R
12		829-1416		4	NUT M16; 10 TUERCA	DADO PORCA	ECROU MOER	MUTTER MØTRIK	5780
13		NSS		1	NOT SERVICED SEPARATELY Cab, Frame NO SE REPARA SEPARA	NON FORNITO SEPARAT NOT SERVICED SEPARA	NON FOURNI SEPAREMI NIET ALLEEN VERKRIJG	KEIN ERSATZTEIL NOT SERVICED SEPARA	064N
17		299432A1		1	BAR BARRA	BARRA BARRA	BARRE STAAF	STAB BJÆLKE	530B
18		864-8025		3	SCREW M8 x 25; 8.8 TORNILLO	VITE PARAFUSO	VIS SCHROEF	SCHRAUBE SKRUE	7450
19		182220A1		1	GROMMET PASACABLES	ANELLO PASSACAVO CASQUILHO ISOLADOR	PASSE-FIL KABELDOORGANG	TÜLLE RING	131A
20		895-15008		6	WASHER 9 x 20 x 1,6 mm ARANDELA	ROSETTA PIANA ANILHA	RONDELLE SLUITRING	SCHEIBE FLADSKIVE	9720
21		128209A1		4	PLUG TAPÓN	TAPPO BUJÃO	BOUCHON PLUG	STOPFEN PROP	050T
22		353-432		2	PLUG 7/8 TAPÓN	TAPPO BUJAO	BOUCHON PLUG	STOPFEN PROP	6400
23		324053A1		1	DECAL CALCOMANIA	DECALCOMANIA DECALCOMANIA	DECALCOMANIE DECAL	ABZIEHBILD TRANSFER	012D
24		359321A1		1	GUARD DEFENSA	RIPARO PROTECCAO	GARANT AFSCHERMING	SCHUTZBLECH BESKYTTELSESSKAERM	070R
25		450986A1		1	SPACER Upper SEPARADOR	DISTANZIALE ESPACADOR	ENTRETOISE AFSTANDSRING	DISTANZSTÜCK AFSTANDSSTYKKE	075D
26		450931A1		1	SPACER Lower SEPARADOR	DISTANZIALE ESPACADOR	ENTRETOISE AFSTANDSRING	DISTANZSTÜCK AFSTANDSSTYKKE	075D

09-14		p1	11/04

CAB - MOUNTING AND FRAME, ASN AJB0355923
CABINA - SUPPORTO E TELAIO, ASN AJB0355923
CABINE - MONTANTS ET CHÂSSIS, ASN AJB0355923
KABINENBEFESTIGUNG UND -RAHMEN, ASN AJB0355923

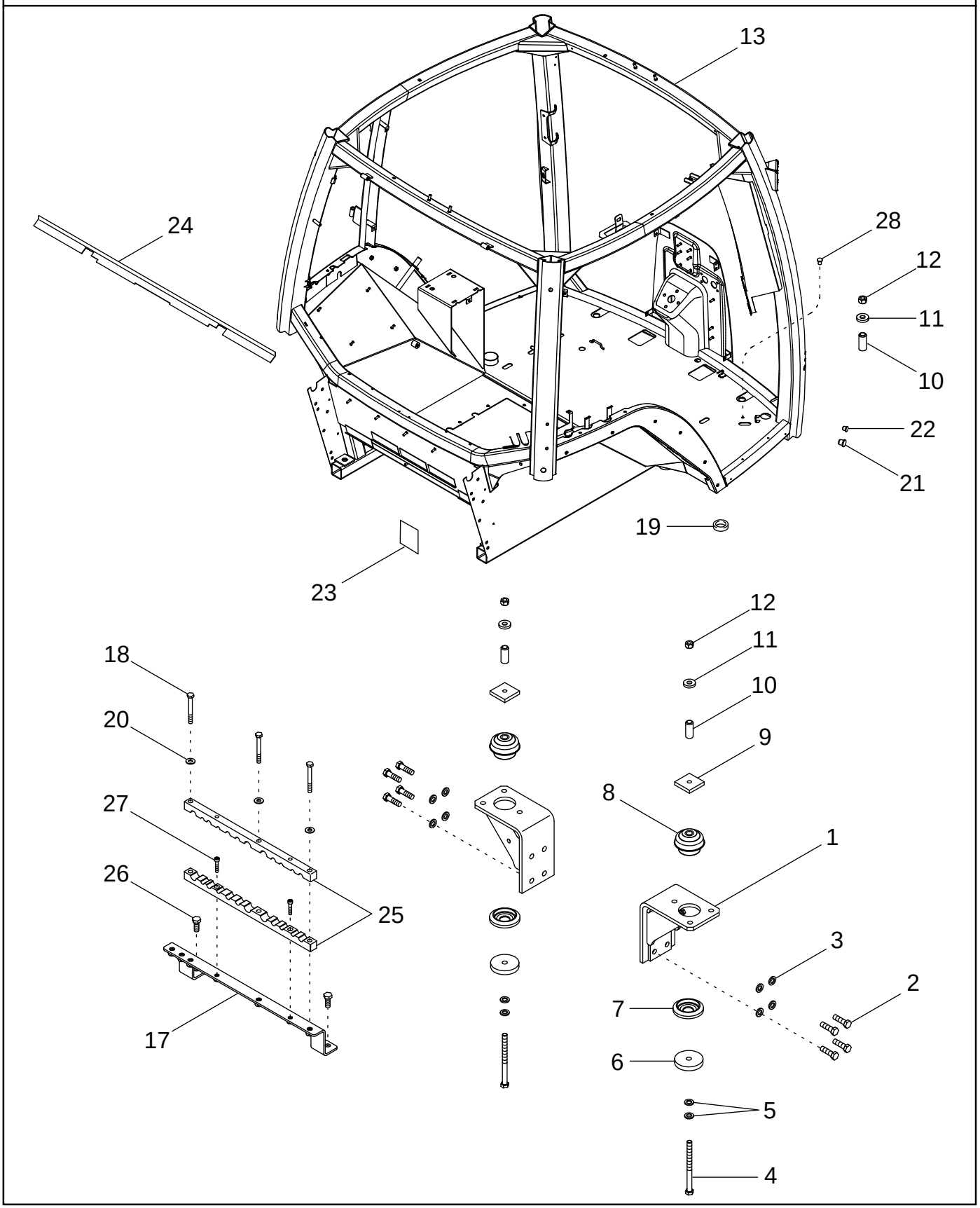

CABINA - MONTAJE Y CHASIS, ASN AJB0355923
SUPORTES E ARMAÇÃO DA CABINA, ASN AJB0355923
CABINE - BEVESTIGING EN FRAME, ASN AJB0355923
FØRERHUS - OPHÆNG OG CHASSISRAMME, ASN AJB0355923

R	N	P.N.	MOD	Q	Description Denominacion	Descrizione Denominação	Description Beschrijving	Bezeichnung Beskrivelse	L.C.
1		446136A3		2	BRACKET PIEZA DE SOPORTE	STAFFA BRACADEIRA	PATTE FIXATION STEUNBEUGEL	HALTERUNG BESLAG	225S
2		828-16055		8	SCREW M16 x 55; 10.9 TORNILLO	VITE PARAFUSO	VIS SCHROEF	SCHRAUBE SKRUE	7450
3		896-12016		8	WASHER 17,5 x 30 x 4 mm, Hardened ARANDELA	ROSETTA PIANA ANILHA	RONDELLE SLUITRING	SCHEIBE FLADSKIVE	9720
4		86987599		4	BOLT TORNILLO	BULLONE PARAFUSO	BOULON BOUT	SCHAUBENBOLZEN SKRUE	140B
5		896-11016		4	WASHER 17,5 x 30 x 4 mm, Front Mount ARANDELA	ROSETTA PIANA ANILHA	RONDELLE SLUITRING	SCHEIBE FLADSKIVE	9720
6		178658A1		4	SPACER 16 mm SEPARADOR	DISTANZIALE ESPACADOR	ENTRETOISE AFSTANDSRING	DISTANZSTÜCK AFSTANDSSTYKKE	075D
7		1286903C1		4	INSULATOR BLOCK Botton PLOT DE SUSPENSIÓN	TASSELLO ELASTICO PLOT DE SUSPENSIÓN	PLOT SUSPENSION RUBBEREN BLOK	DÄMPFUNGSBLOCK ISOLATORBLOK	061T
8		192337A1		4	BLOCK, INSULATING Top PIEZA AISLADORA	BLOCCHETTO ISOLANTE BLOCO ISOLADOR	BLOC ISOLANT ISOLATIEBLOK	ISOLIERBLOCK ISOLERINGSBLOK	076B
9		86985936		4	PLATE PLACA	PIASTRA CHAPA	PLAQUE PLAAT	PLATTE PLADE	105P
10		184262A1		4	SPACER SEPARADOR	DISTANZIALE ESPACADOR	ENTRETOISE AFSTANDSRING	DISTANZSTÜCK AFSTANDSSTYKKE	075D
11		897278H1		4	WASHER ARANDELA	ROSETTA PIANA ANILHA	RONDELLE SLUITRING	BEILAGSCHEIBE FLADSKIVE	131R
12		829-1416		4	NUT M16; 10 TUERCA	DADO PORCA	ECROU MOER	MUTTER MØTRIK	5780
13		NSS		1	NOT SERVICED SEPARATELY Cab, Frame NO SE REPARA SEPARA	NON FORNITO SEPARAT NOT SERVICED SEPARA	NON FOURNI SEPAREMI NIET ALLEEN VERKRIJG	KEIN ERSATZTEIL NOT SERVICED SEPARA	064N
17		87435455		1	BRACKET PIEZA DE SOPORTE	STAFFA BRACADEIRA	PATTE FIXATION STEUNBEUGEL	HALTERUNG BESLAG	225S
18		814-8060		3	SCREW M8 x 60; 8.8 TORNILLO	VITE PARAFUSO	VIS SCHROEF	SCHRAUBE SKRUE	040V
19		182220A1		1	GROMMET PASACABLES	ANELLO PASSACAVO CASQUILHO ISOLADOR	PASSE-FIL KABELDOORGANG	TÜLLE RING	131A
20		895-15008		3	WASHER 9 x 20 x 1,6 mm ARANDELA	ROSETTA PIANA ANILHA	RONDELLE SLUITRING	SCHEIBE FLADSKIVE	9720
21		128209A1		4	PLUG TAPÓN	TAPPO BUJÃO	BOUCHON PLUG	STOPFEN PROP	050T
22		353-432		2	PLUG 7/8 TAPÓN	TAPPO BUJAO	BOUCHON PLUG	STOPFEN PROP	6400
23		324053A1		1	DECAL CALCOMANIA	DECALCOMANIA DECALCOMANIA	DECALCOMANIE DECAL	ABZIEHBILD TRANSFER	012D
24		359321A1		1	GUARD DEFENSA	RIPARO PROTECCAO	GARANT AFSCHERMING	SCHUTZBLECH BESKYTTELSESSKAERM	070R
25		87430951		1	BAR Clamp, 2 Piece BARRA	BARRA BARRA	BARRE STAAF	STAB BJÆLKE	530B
26		615-10025		2	SCREW M10 x 25 TORNILLO	VITE PARAFUSO	VIS SCHROEF	SCHRAUBE SKRUE	040V

09-14		p2	11/04

CAB - MOUNTING AND FRAME, ASN AJB0355923
CABINA - SUPPORTO E TELAIO, ASN AJB0355923
CABINE - MONTANTS ET CHÂSSIS, ASN AJB0355923
KABINENBEFESTIGUNG UND -RAHMEN, ASN AJB0355923

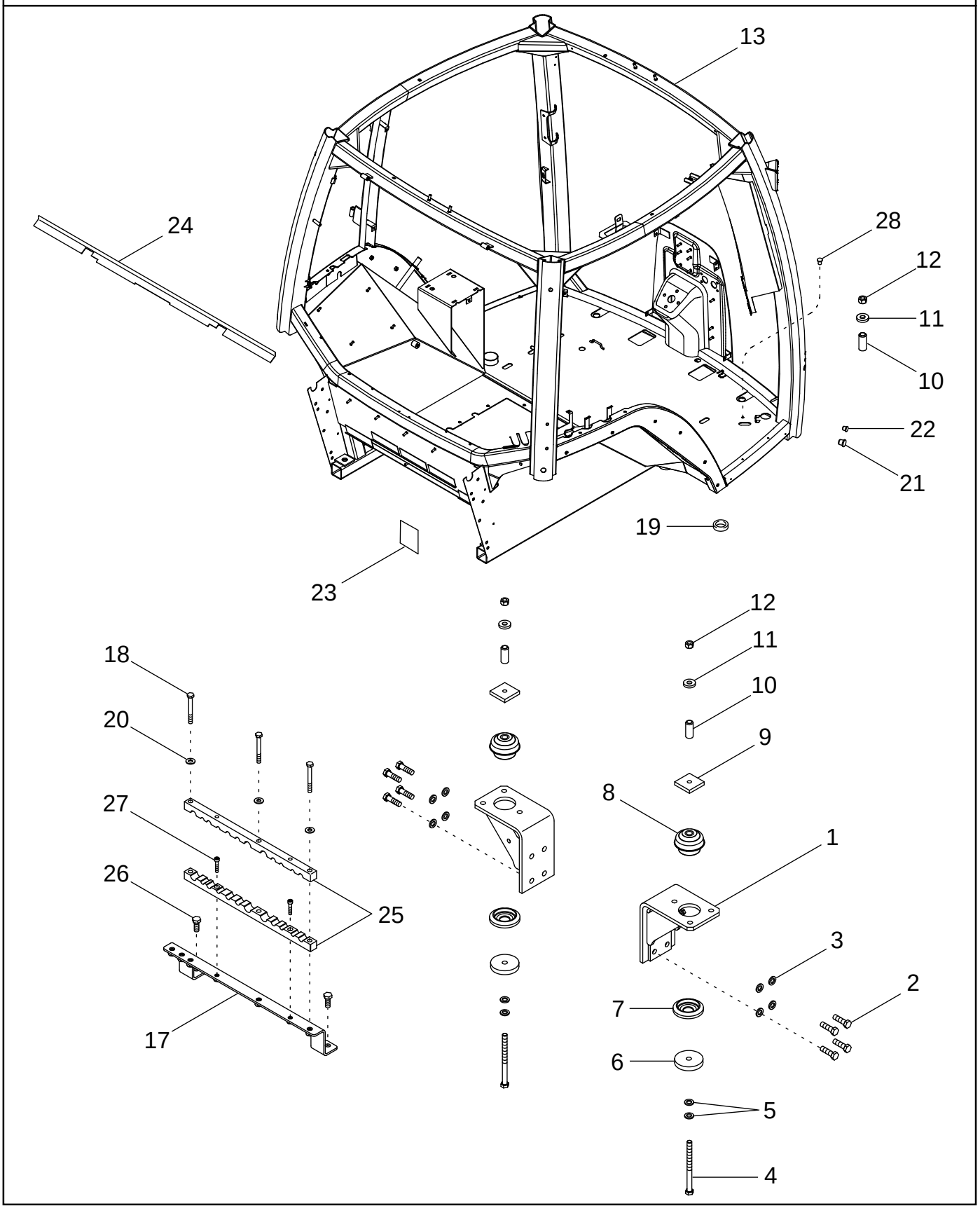

CABINA - MONTAJE Y CHASIS, ASN AJB0355923
SUPORTES E ARMAÇÃO DA CABINA, ASN AJB0355923
CABINE - BEVESTIGING EN FRAME, ASN AJB0355923
FØRERHUS - OPHÆNG OG CHASSISRAMME, ASN AJB0355923

R	N	P.N.	MOD	Q	Description Denominacion	Descrizione Denominação	Description Beschrijving	Bezeichnung Beskrivelse	L.C.
27		864-6030		2	SCREW Socket Head, M6 x 30				
						VITE	VIS	SCHRAUBE	040V
					TORNILLO	PARAFUSO	SCHROEF	SKRUE	
28		441460A1		1	PLUG 9,5 mm	TAPPO	BOUCHON	STOPFEN	050T
					TAPÓN	BUJÃO	PLUG	PROP	

09-15		p1	11/04

CAB - ROOF
CABINA - TETTO
CABINE - TOIT
KABINENDACH

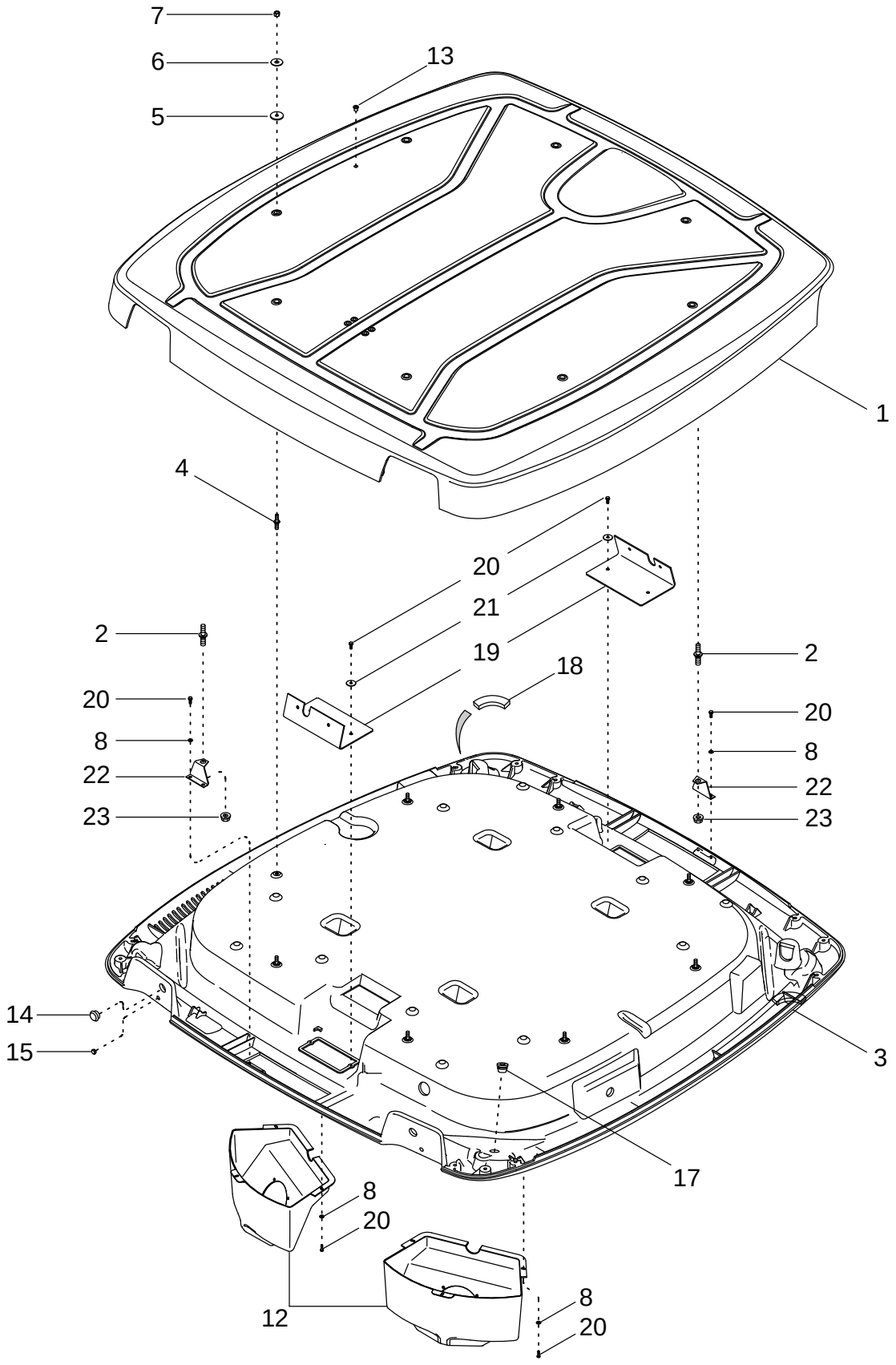

CABINA - TECHO
TECTO DA CABINA
CABINE - DAK
FØRERHUS - TAG

R	N	P.N.	MOD	Q	Description Denominacion	Descrizione Denominação	Description Beschrijving	Bezeichnung Beskrivelse	L.C.
1		433974A3		1	ROOF Upper, Inc. 2 TECHO	TETTO TEJADILHO	TOIT HARD DAK	DACH HARD TOP	137T
2		449901A1		2	STUD PRISIONERO	PRIGIONIERO PERNE	GOUJON TAPEIND	STEHBOLZEN STOETTEBOLT	210P
3		437785A3		1	ROOF Lower, Inc. 4 TECHO	TETTO TEJADILHO	TOIT HARD DAK	DACH HARD TOP	137T
4		237275A1		8	STUD PRISIONERO	PRIGIONIERO PERNE	GOUJON TAPEIND	STEHBOLZEN STOETTEBOLT	210P
5		221429A2		8	SPACER SEPARADOR	DISTANZIALE ESPACADOR	ENTRETOISE AFSTANDSRING	DISTANZSTÜCK AFSTANDSSTYKKE	075D
6		495-81140		8	WASHER 13/32 x 1-1/4 x 1/16 ARANDELA	ROSETTA PIANA ANILHA	RONDELLE SLUITRING	SCHEIBE FLADSKIVE	9720
7		832-10408		8	NUT M8; 8 TUERCA	DADO PORCA	ECROU MOER	MUTTER MØTRIK	010D
8		895-11006		12	WASHER 6,6 x 12 x 1,6 mm ARANDELA	ROSETTA PIANA ANILHA	RONDELLE SLUITRING	BEILAGSCHEIBE FLADSKIVE	131R
12		433800A1		4	HOUSING Speaker Cover CAVIDAD	ALLOGGIAMENTO ALOJAMENTO	CARTER HUIS	GEHÄUSE HUS	014V
13		441460A1		1	PLUG TAPÓN	TAPPO BUJÃO	BOUCHON PLUG	STOPFEN PROP	050T
14		353-411		2	PLUG 1 in dia TAPÓN	TAPPO BUJAO	BOUCHON PLUG	STOPFEN PROP	6400
15		353-425		2	PLUG 7/16 in dia TAPÓN	TAPPO BUJAO	BOUCHON PLUG	STOPFEN PROP	6400
17		182220A1		1	GROMMET PASACABLES	ANELLO PASSACAVO CASQUILHO ISOLADOR	PASSE-FIL KABELDOORGANG	TÜLLE RING	131A
18		365219A1		1	SEAL ANILLO DE CIERRE	ANELLO DI TENUTA ANEL DE VEDACAO	JOINT DICHTINGSRING	DICHTUNG PAKNINGSRING	132A
19		401110A2		2	BRACKET PIEZA DE SOPORTE	STAFFA BRACADEIRA	PATTE FIXATION STEUNBEUGEL	HALTERUNG BESLAG	225S
20		758-5		20	SCREW M5,5 x 15 TORNILLO	VITE PARAFUSO	VIS SCHROEF	SCHRAUBE SKRUE	7450
21		895-15006		4	WASHER 6,6 x 25 x 1,6 mm ARANDELA	ROSETTA PIANA ANILHA	RONDELLE SLUITRING	SCHEIBE FLADSKIVE	9720
22		449074A1		2	BRACKET PIEZA DE SOPORTE	STAFFA BRACADEIRA	PATTE FIXATION STEUNBEUGEL	HALTERUNG BESLAG	225S
23		832-4748		2	NUT M8 TUERCA	DADO PORCA	ECROU MOER	MUTTER MØTRIK	5780

09-16		p1	11/04

CAB - EXTERIOR TRIM
CABINA - RIFINITURA ESTERIORE
CABINE - GARNISSAGE EXTÉRIEUR
KABINEN-AUSSENVERKLEIDUNG

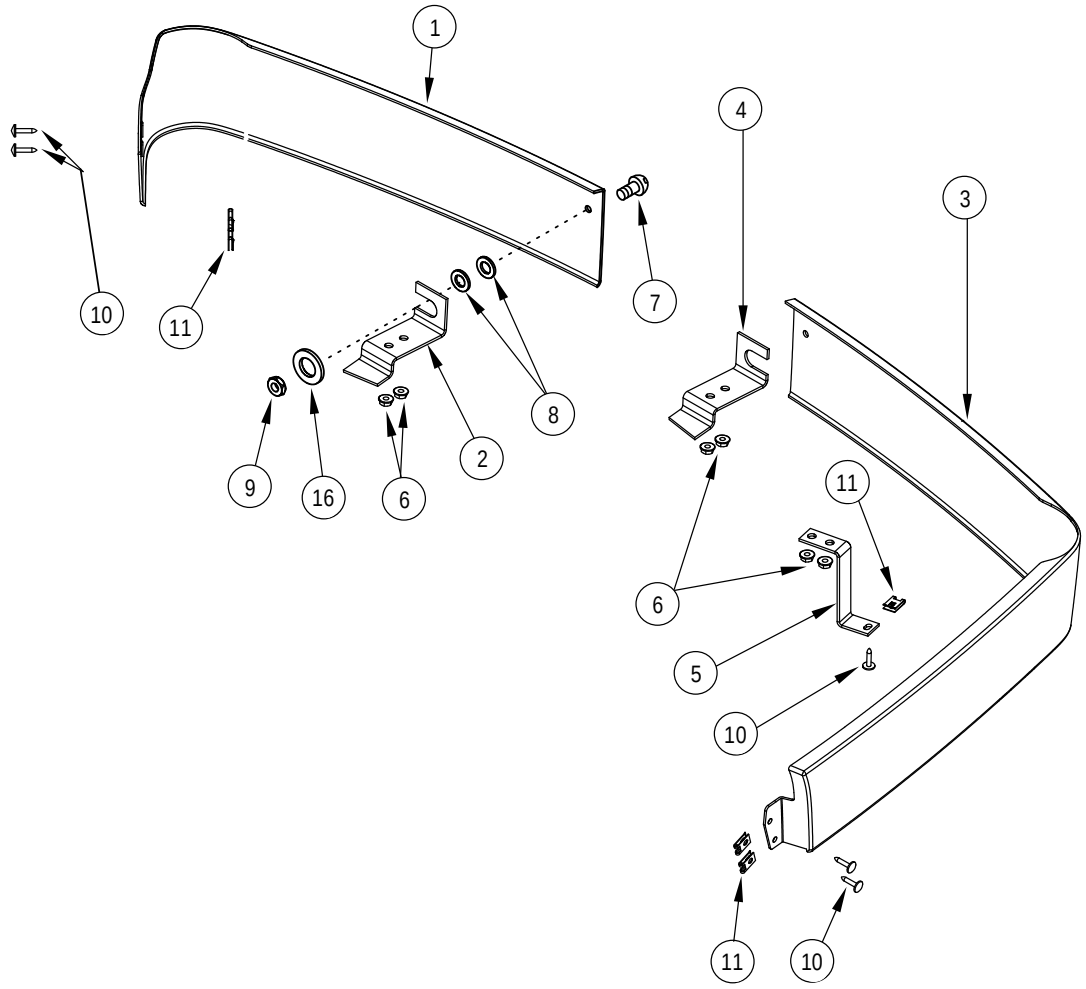

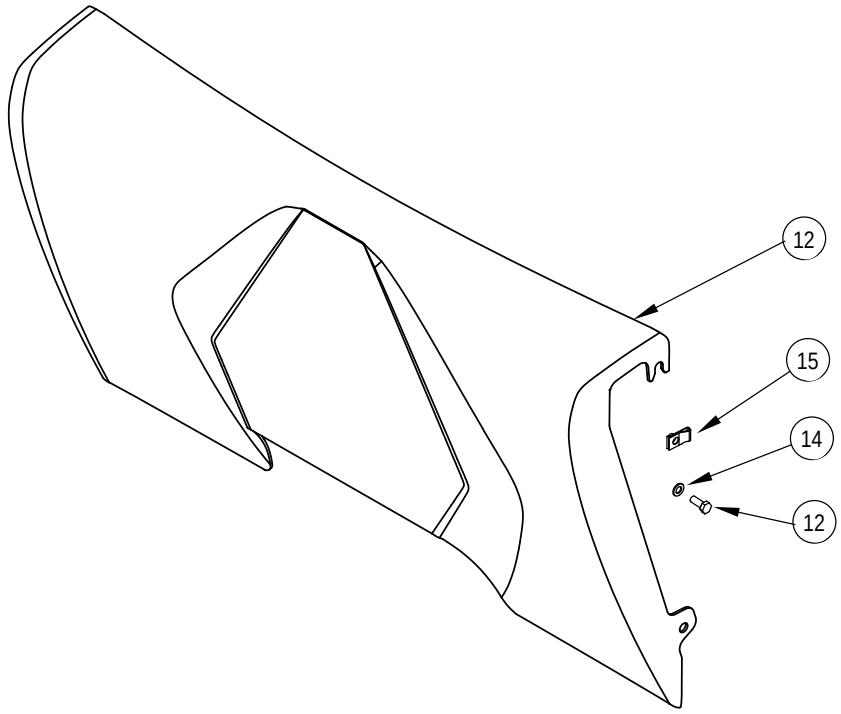

CABINA - REVESTIMIENTO EXTERIOR
COBERTURA EXTERIOR DA CABINA
CABINE - AFWERKING BUITENZIJDE
FØRERHUS - UDVENDIG PYNTELISTE

R	N	P.N.	MOD	Q	Description Denominacion	Descrizione Denominação	Description Beschrijving	Bezeichnung Beskrivelse	L.C.
1		258865A4		1	PADDING Front Left Hand Side				
						IMBOTTITURA	REMBOURRAGE	POLSTERUNG	P843
					ACOLCHADO	ALMOFADADO	VULLING	POLSTRING	
2		298465A2		1	SUPPORT Left Hand	SUPPORTO	SUPPORT	STÜTZE	300S
					SOPORTE	SUPORTE	STEUN	BESLAG	
3		258866A4		1	PADDING Front Right Hand Side				
						IMBOTTITURA	REMBOURRAGE	POLSTERUNG	P843
					ACOLCHADO	ALMOFADADO	VULLING	POLSTRING	
4		300432A2		1	Right Hand				
5		298464A1		1	SUPPORT	SUPPORTO	SUPPORT	STÜTZE	300S
					SOPORTE	SUPORTE	STEUN	BESLAG	
6		825-2408		6	NUT M8	DADO	ECROU	MUTTER	5780
					TUERCA	PORCA	MOER	MØTRIK	
7		840-1820		2	SCREW M8 x 20	VITE	VIS	SCHRAUBE	7450
					TORNILLO	PARAFUSO	SCHROEF	SKRUE	
8		96814C3		4	WASHER	ROSETTA PIANA	RONDELLE	BEILAGSCHEIBE	131R
					ARANDELA	ANILHA	SLUITRING	FLADSKIVE	
9		832-10408		2	NUT M8; 8	DADO	ECROU	MUTTER	010D
					TUERCA	PORCA	MOER	MØTRIK	
10		104033C2		5	SCREW No. 10 x 3/4	VITE	VIS	SCHRAUBE	040V
					TORNILLO	PARAFUSO	SCHROEF	SKRUE	
11		131-642		5	NUT No. 10	DADO	ECROU	MUTTER	5780
					TUERCA	PORCA	MOER	MØTRIK	
12		387123A3		1	PANEL Rear	PANNELLO	PANNEAU	TAFEL	025P
					CONTRAPANEL	PAINEL	PANEELWERK	PANEL	
13		614-8020		4	SCREW M8 x 20; 8.8	VITE	VIS	SCHRAUBE	P136
					TORNILLO	PARAFUSO	SCHROEF	SKRUE	
14		895-11008		4	WASHER 9 x 17 x 1,6 mm	ROSETTA PIANA	RONDELLE	BEILAGSCHEIBE	131R
					ARANDELA	ANILHA	SLUITRING	FLADSKIVE	
15		833-41308		4	NUT M8	DADO	ECROU	MUTTER	5780
					TUERCA	PORCA	MOER	MØTRIK	
16		495-81140		2	WASHER 13/32 x 1-1/4 x 1/16				
						ROSETTA PIANA	RONDELLE	SCHEIBE	9720
					ARANDELA	ANILHA	SLUITRING	FLADSKIVE	

09-17		p1	11/04

CAB - STEPS
CABINA - PREDELLE
CABINE - MARCHEPIED
KABINENSTUFEN

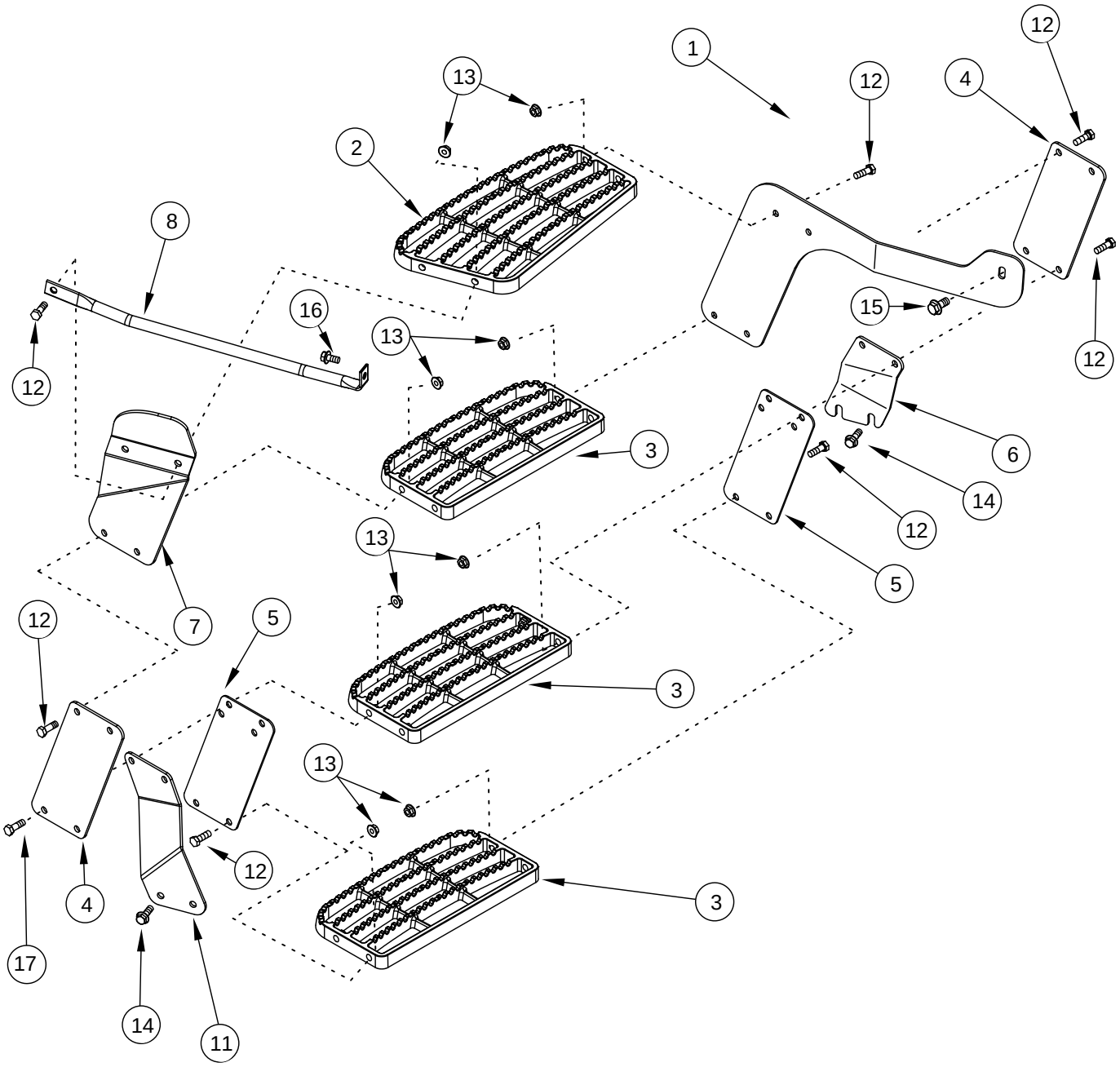

CABINA - PELDAÑOS
DEGRAUS DA CABINA
CABINE - TREDES
FØRERHUS - TRIN

R	N	P.N.	MOD	Q	Description Denominacion	Descrizione Denominação	Description Beschrijving	Bezeichnung Beskrivelse	L.C.
1		446063A2	a	1	RISER Front, Upper REALCE	MONTANTE DEGRAU	RÉHAUSSE RISER	HUBVORRICHTUNG STIGRØR	7205
1		87433173	b	1	RISER Front, Upper REALCE	MONTANTE DEGRAU	RÉHAUSSE RISER	HUBVORRICHTUNG STIGRØR	7205
2		257374A1		1	STEP Upper ESCALON	MONTATOIO MESTRA DE CALIBRACA	MARCHE VOETTREDE	STUFE TRINPLADE	116M
3		257375A1		3	STEP ESCALON	MONTATOIO MESTRA DE CALIBRACA	MARCHE VOETTREDE	STUFE TRINPLADE	116M
4		446061A1		2	RISER Center REALCE	MONTANTE DEGRAU	RÉHAUSSE RISER	HUBVORRICHTUNG STIGRØR	7205
5		446064A1		2	RISER Lower REALCE	MONTANTE DEGRAU	RÉHAUSSE RISER	HUBVORRICHTUNG STIGRØR	7205
6		446065A1		1	BRACKET Front PIEZA DE SOPORTE	STAFFA BRACADEIRA	PATTE FIXATION STEUNBEUGEL	HALTERUNG BESLAG	225S
7		446062A1		1	RISER Rear, Upper REALCE	MONTANTE DEGRAU	RÉHAUSSE RISER	HUBVORRICHTUNG STIGRØR	7205
8		253698A3		1	SUPPORT SOPORTE	SUPPORTO SUPORTE	SUPPORT STEUN	STÜTZE BESLAG	300S
11		446066A1		1	BRACKET Rear PIEZA DE SOPORTE	STAFFA BRACADEIRA	PATTE FIXATION STEUNBEUGEL	HALTERUNG BESLAG	225S
12		87012915		16	BOLT M10 x 35 TORNILLO	BULLONE PARAFUSO	BOULON BOUT	SCHAUBENBOLZEN SKRUE	140B
13		1348399C1		16	NUT M10 TUERCA	DADO PORCA	ECROU MOER	MUTTER MØTRIK	010D
14		555-7		4	SCREW M10 x 30; 8.8 TORNILLO	VITE PARAFUSO	VIS SCHROEF	SCHRAUBE SKRUE	7450
15		555-6	a	1	SCREW M12 x 25; 8.8 TORNILLO	VITE PARAFUSO	VIS SCHROEF	SCHRAUBE SKRUE	7450
15		555-5	b	1	SCREW M10 x 25; 8.8 TORNILLO	VITE PARAFUSO	VIS SCHROEF	SCHRAUBE SKRUE	7450
16		555-4		1	SCREW M10 x 20; 8.8 TORNILLO	VITE PARAFUSO	VIS SCHROEF	SCHRAUBE SKRUE	7450

(a) BSN AJB0355923
(b) ASN AJB0355923

09-18		p1	11/04

CAB - FRONT WINDOW STEP
CABINA - PREDELLA DEL PARABREZZA
CABINE - MARCHE D'ACCÈS AU PARE-BRISE
KABINENSTUFE FÜR WINDSCHUTZSCHEIBE

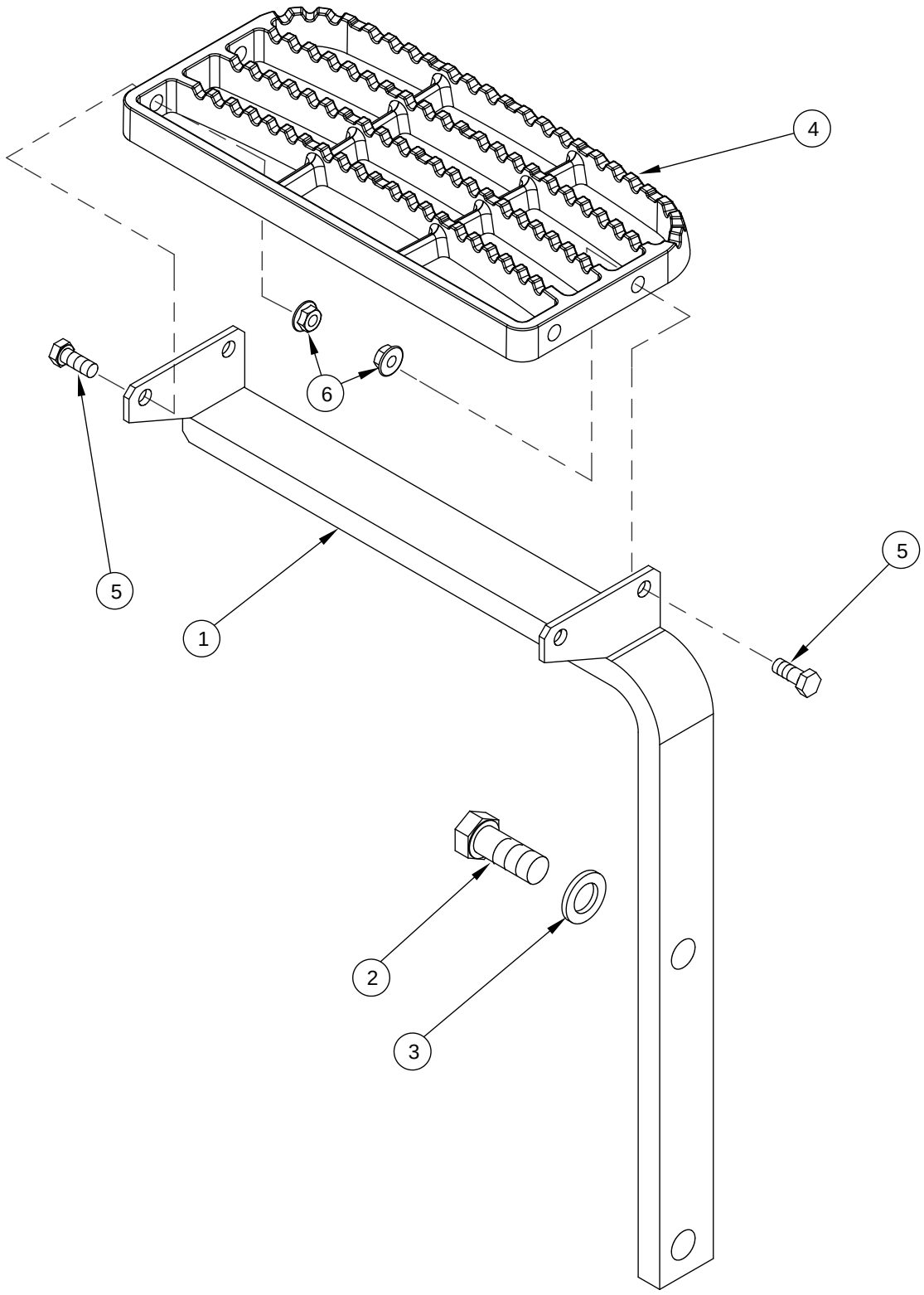

CABINA - PELDAÑO DE LA VENTANA DELANTERA
DEGRAU DA JANELA DIANTEIRA DA CABINA
FØRERHUS - FORRUDE TRIN
FØRERHUS - FORRUDE TRIN

R	N	P.N.	MOD	Q	Description Denominacion	Descrizione Denominação	Description Beschrijving	Bezeichnung Beskrivelse	L.C.
	1	**308727A**		1	KIT Inc. 1 - 6 JEUGO	KIT JOGO	POCHETTE KIT	PACKUNG KIT	4830
1		**284654A1**		1	SUPPORT APOYADERO	SUPPORTO SUPORTE	SUPPORT SUPPORT	STUETZE SUPPORT	8790
2		**627-20050**		2	SCREW M20 x 50; 10.9 TORNILLO	VITE PARAFUSO	VIS SCHROEF	SCHRAUBE SKRUE	7450
3		**896-11020**		2	WASHER 22 x 37 x 4 mm ARANDELA	ROSETTA PIANA ANILHA	RONDELLE SLUITRING	SCHEIBE FLADSKIVE	9720
4		**257375A1**		1	STEP ESCALON	MONTATOIO MESTRA DE CALIBRACA	MARCHE VOETTREDE	STUFE TRINPLADE	116M
5		**614-10025**		4	BOLT M10 x 25 TORNILLO	BULLONE PARAFUSO	BOULON BOUT	SCHAUBENBOLZEN SKRUE	140B
6		**825-2410**		4	NUT M10 TUERCA	DADO PORCA	ECROU MOER	MUTTER MØTRIK	010D

(1) Order From Machinery Price List

09-19		p1	11/04

CAB - DOOR
CABINA - SPORTELLO
CABINE - PORTIÈRE
KABINENTÜR

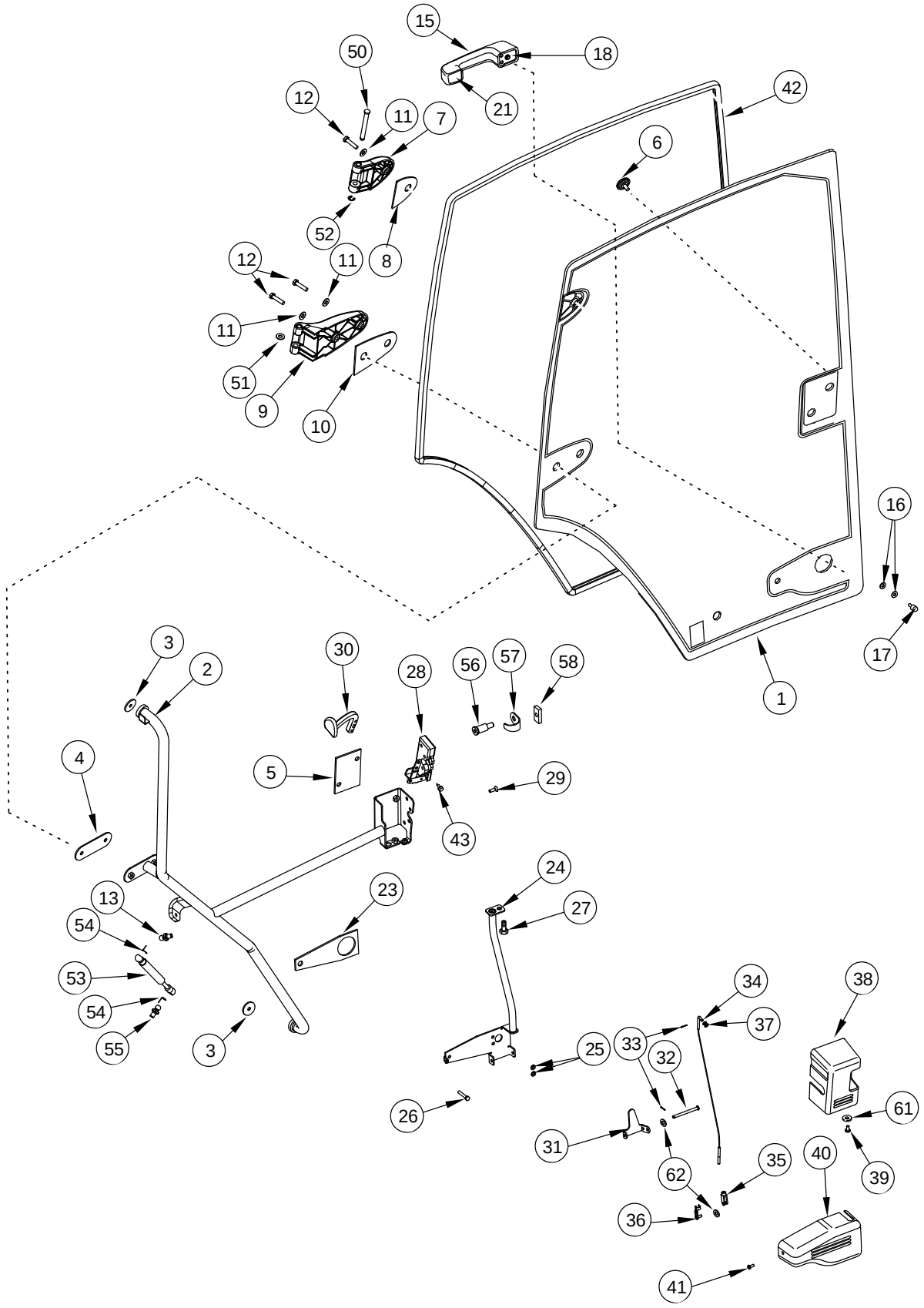

CABINA - PUERTA
PORTA DA CABINA
CABINE - PORTIER
FØRERHUS - DØR

R	N	P.N.	MOD	Q	Description Denominacion	Descrizione Denominação	Description Beschrijving	Bezeichnung Beskrivelse	L.C.
		316518A3		1	DOOR ASSY. Inc. 1 - 43, Order Components				
						PORTA, COMPLESSIVO	PORTE (ASSEMBLEE)	TUER (KPLT.)	P519
					PUERTA (CONJUNTO)	PORTA CONJUNTO	DOOR ASSY.	DOOR ASSY.	
1		**344730A1**		1	GLASS, CAB	VETRO CABINA	VITRE DE CABINE	KABINENGLAS	069F
					VENTANA	JANELA	VENSTER	KABINERUDE	
2		**344728A1**		1	HANDLE	MANIGLIA	POIGNÉE	HANDGRIFF	020M
					MANECILLA	MANIPULO	HENDEL	HAANDTAG	
3		**221429A2**		2	SPACER	DISTANZIALE	ENTRETOISE	DISTANZSTÜCK	075D
					SEPARADOR	ESPACADOR	AFSTANDSRING	AFSTANDSSTYKKE	
4		**308633A1**		1	SPACER 3,0 mm	DISTANZIALE	ENTRETOISE	DISTANZSTÜCK	075D
					SEPARADOR	ESPACADOR	AFSTANDSRING	AFSTANDSSTYKKE	
5		**275352A2**		1	SPACER	DISTANZIALE	ENTRETOISE	DISTANZSTÜCK	075D
					SEPARADOR	ESPACADOR	AFSTANDSRING	AFSTANDSSTYKKE	
6		**198916A2**		3	CAP	TAPPO SERBATOIO	CHAPEAU	KAPPE	052T
					TAPON DEL DEPOSITO	TAMPAO DE RESERVAT	RESERVOIRDOP	TANKDAEKSEL	
7		**304921A1**		1	HINGE Upper	CERNIERA	CHARNIERE	SCHARNIER	140C
					BISAGRA	DOBRADICA	SCHARNIER	HAENGSEL	
8		**305158A1**		1	SPACER	DISTANZIALE	ENTRETOISE	DISTANZSTÜCK	075D
					SEPARADOR	ESPACADOR	AFSTANDSRING	AFSTANDSSTYKKE	
9		**191206A3**		1	HINGE Lower	CERNIERA	PAUMELLE	SCHARNIER	Z579
					BISAGRA	DOBRADICA	HINGE	HINGE	
10		**305159A1**		1	SPACER	DISTANZIALE	ENTRETOISE	DISTANZSTÜCK	075D
					SEPARADOR	ESPACADOR	AFSTANDSRING	AFSTANDSSTYKKE	
11		**895-15008**		3	WASHER 9 x 20 x 1,6 mm	ROSETTA PIANA	RONDELLE	SCHEIBE	9720
					ARANDELA	ANILHA	SLUITRING	FLADSKIVE	
12		**614-8035**		3	SCREW M8 x 35; 8.8	VITE	VIS	SCHRAUBE	P136
					TORNILLO	PARAFUSO	SCHROEF	SKRUE	
13		**3234063R1**		1	BALL JOINT	GIUNTO SFERICO	ROTULE	KUGELGELENK	070G
					JUNTA DE ROTULA	JUNTA ESFÉRICA	KOGELGEWRICHT	KUGLELED	
15		**60-7083T1**		1	HANDLE	MANIGLIA	POIGNÉE	HANDGRIFF	020M
					MANECILLA	MANIPULO	HENDEL	HAANDTAG	
16		**495-31027**		2	WASHER 17/64 x 5/8 x 3/64	ROSETTA PIANA	RONDELLE	SCHEIBE	9720
					ARANDELA	ANILHA	SLUITRING	FLADSKIVE	
17		**314610A1**		1	BUTTON	BOTTONE	BOUTON	KNOPF	120B
					BOTON	BOTAO	KNOP	KNAP	
18		**321551A1**		1	BEZEL	MOSTRINA	ENCADREMENT	ZIERRING	123M
					MARCO	CHAPA DE ORNAMENTC	SIERPLAAT	ORNAMENTERING	
21		**321552A1**		1	BEZEL	MOSTRINA	ENCADREMENT	ZIERRING	123M
					MARCO	CHAPA DE ORNAMENTC	SIERPLAAT	ORNAMENTERING	
23		**191939A3**		1	SPACER	DISTANZIALE	ENTRETOISE	DISTANZSTÜCK	075D
					SEPARADOR	ESPACADOR	AFSTANDSRING	AFSTANDSSTYKKE	
24		**275359A3**		1	SUPPORT	SUPPORTO	SUPPORT	STÜTZE	300S
					SOPORTE	SUPORTE	STEUN	BESLAG	
25		**892-11006**		3	WASHER, LOCK M6	ROSETTA DI SICUREZZA	RONDELLE FREIN	SPRENGRING	132R
					ARANDELA DE FRENO	ANILHA DE FIXACAO	VEERRING	LAASESKIVE	
26		**814-6035**		3	SCREW M6 x 35; 8.8	VITE	VIS	SCHRAUBE	P136
					TORNILLO	PARAFUSO	SCHROEF	SKRUE	
27		**614-8016**		1	SCREW M8 x 16; 8.8	VITE	VIS	SCHRAUBE	P136
					TORNILLO	PARAFUSO	SCHROEF	SKRUE	

09-19		p2	11/04

CAB - DOOR
CABINA - SPORTELLO
CABINE - PORTIÈRE
KABINENTÜR

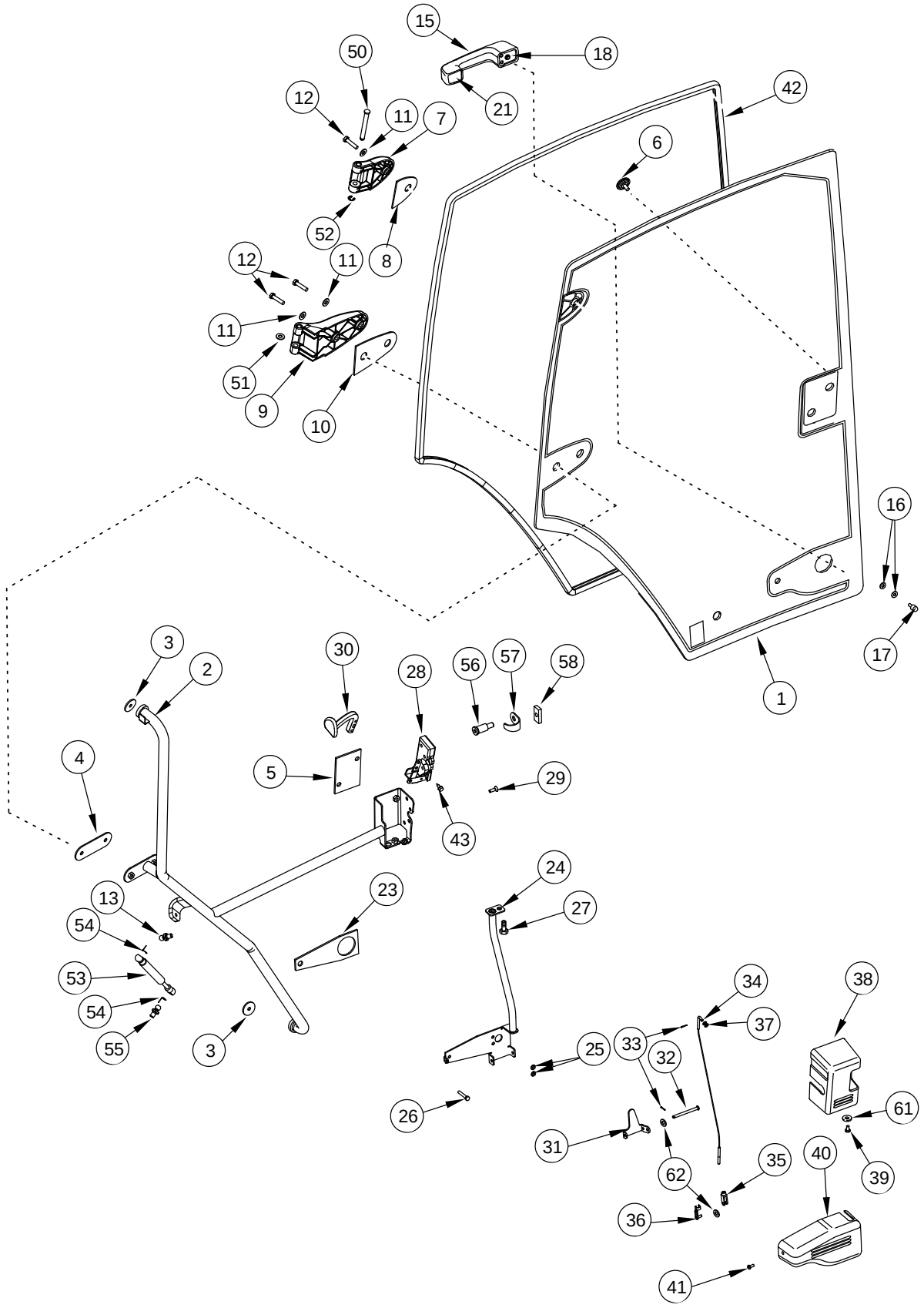

CABINA - PUERTA
PORTA DA CABINA
CABINE - PORTIER
FØRERHUS - DØR

R	N	P.N.	MOD	Q	Description Denominacion	Descrizione Denominação	Description Beschrijving	Bezeichnung Beskrivelse	L.C.
28		321013A1		1	LOCK CERRADURA	SERRATURA FECHADURA	SERRURE SLOT	SCHLOSS LAAS	120S
29		461-42512		4	SCREW 1/4 x 3/4 TORNILLO	VITE PARAFUSO	VIS SCHROEF	SCHRAUBE SKRUE	7450
30		321023A3		1	HANDLE MANECILLA	MANIGLIA MANIPULO	POIGNÉE HENDEL	HANDGRIFF HAANDTAG	020M
31		314611A1		1	LEVER PALANCA	LEVA ALAVANCA	LEVIER HEFBOOM	HEBEL HAANDTAG	045L
32		275353A1		1	PIN, BALL PIVOTE DE LA ROTULAF	PERNO, GIUNTO SFERIC CAVILHA DE ROTULA	AXE ROTULE KOGELPEN	KUGELPOLZEN KUGLETAP	090P
33		733-1610		3	PIN, SPLIT (COTTER) 1,6 x 10 mm PASADOR ABIERTO	COPPIGLIA TROCO DE ABRIR	GOUPILLE SPLITPEN	SPLINT SPLITBOLT	P160
34		314606A1		1	CABLE CABLE	CAVO CABO	CABLE KABEL	KABEL KABEL	650C
35		713-125		1	CLEVIS, ADJUSTABLE HORQUILLA DE AJUSTE	MANIGL .PERNO, REGOI BRACADEIRA	CHAPE DE RÉGLAGE CLEVIS, ADJUSTABLE	GABEL, EINSTELLBAR TRÆKBØJLE, JUSTERBA	1680
36		1999650C1		1	PIN, CLEVIS PASADOR DE HORQUILL	SPINA, PER FORCELLA CUPILHA	AXE DE CHAPE PIN, CLEVIS	GABELSTIFT GAFFELBOLT	P694
37		895-11005		2	WASHER 5,5 x 10 x 1 mm ARANDELA	ROSETTA PIANA ANILHA	RONDELLE SLUITRING	SCHEIBE FLADSKIVE	9720
38		275344A6		1	PROTECTOR PROTECTOR	PROTETTORE PROTETOR	PROTECTEUR PROTECTOR	SCHUTZ PROTECTOR	6540
39		840-1612		1	SCREW M6 x 12; 4.8 TORNILLO	VITE PARAFUSO	VIS SCHROEF	SCHRAUBE SKRUE	7450
40		275345A4		1	COVER TAPADERA	COPERCHIO COBERTA	COUVERCLE DEKSEL	DECKEL DÆKSEL	265C
41		840-1512		1	SCREW M5 x 12 TORNILLO	VITE PARAFUSO	VIS SCHROEF	SCHRAUBE SKRUE	7450
42		254772A3		1	DOOR SEAL JUNTA DE PUERTA	TENUTA, SPORTELLO GUARNICAO PORTA	JOINT DE PORTE DOOR SEAL	TÜRDICHTUNG DØRFORSEGLING	Z529
43		781-44625		2	SCREW M6 x 25 TORNILLO	VITE PARAFUSO	VIS SCHROEF	SCHRAUBE SKRUE	7450
50		178819A3		2	PIN PERNO	PERNO PERNO	AXE PEN	BOLZEN STIFT	080P
51		895-18010		1	WASHER 11 x 18 x 1,6 mm ARANDELA	ROSETTA PIANA ANILHA	RONDELLE SLUITRING	SCHEIBE FLADSKIVE	9720
52		800-439		2	RING 9 mm ANILLO	ANELLO ANEL	ANNEAU RING	RING RING	7175
53		1280263C1		1	CYLINDER ASSY. CILINDRO (CONJUNTO)	CILINDRO, COMPLESS. CILINDRO CONJUNTO	VERIN CYLINDER ASSY.	ZYLINDER (KPLT.) CYLINDER ASSY.	P477
54		3233348R1		2	CLIP, ELECTRICAL CLIP ELECTRICO	FERMAGLIO, ELETTR. GRAMPO	CLIP CLIP, ELECTRICAL	KABELSTECKSCHUH CLIP, ELECTRICAL	Z327
55		3234063R1		1	BALL JOINT JUNTA DE ROTULA	GIUNTO SFERICO JUNTA ESFÉRICA	ROTULE KOGELGEWRICHT	KUGELGELENK KUGLELED	070G
56		321277A1		1	PIN PERNO	PERNO PERNO	AXE PEN	BOLZEN STIFT	080P
57		321535A1		1	PROTECTOR PROTECTOR	PROTETTORE PROTETOR	PROTECTEUR PROTECTOR	SCHUTZ PROTECTOR	6540

09-19		p3	11/04

CAB - DOOR
CABINA - SPORTELLO
CABINE - PORTIÈRE
KABINENTÜR

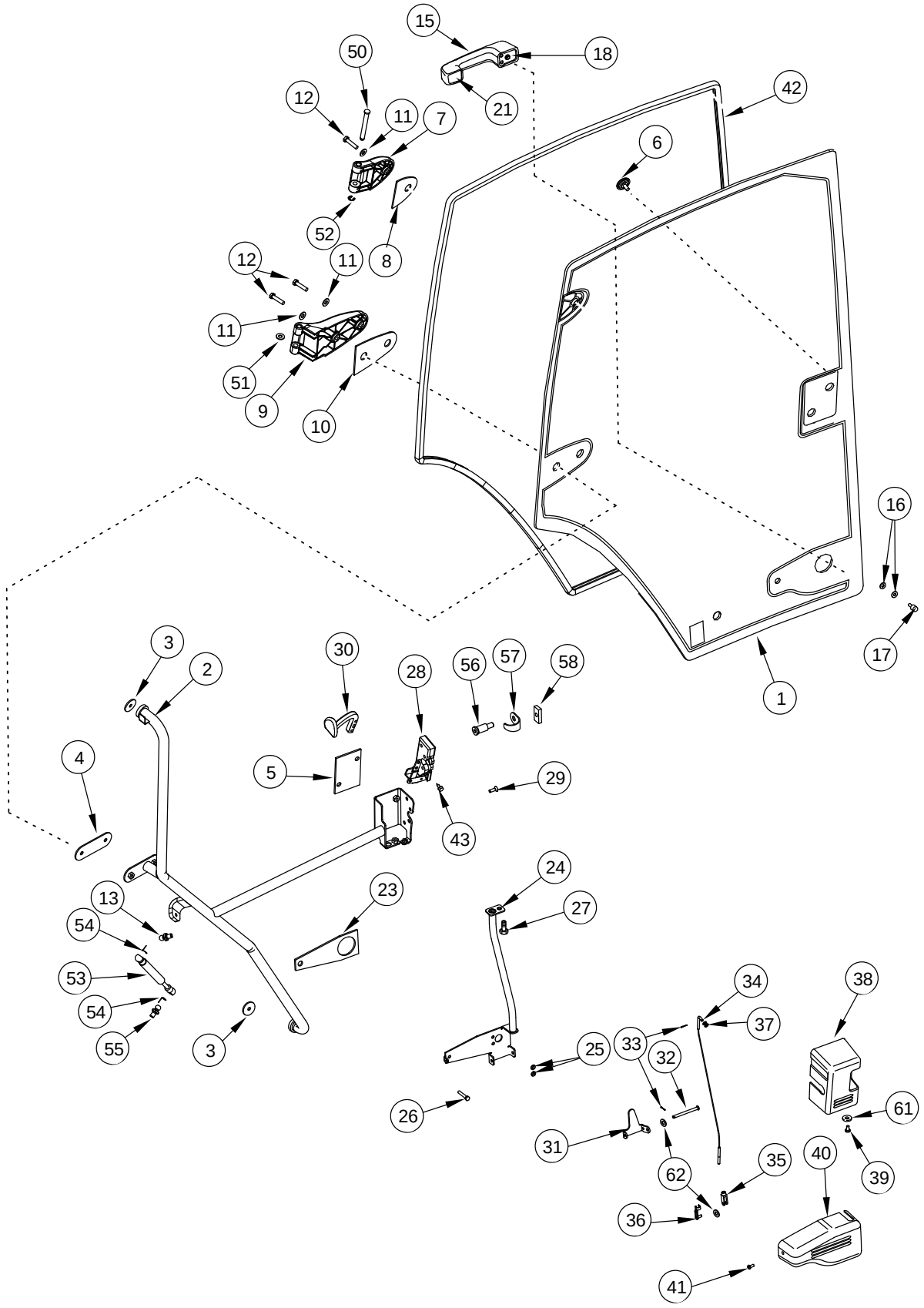

CABINA - PUERTA
PORTA DA CABINA
CABINE - PORTIER
FØRERHUS - DØR

R	N	P.N.	MOD	Q	Description Denominacion	Descrizione Denominação	Description Beschrijving	Bezeichnung Beskrivelse	L.C.
58		275444A1		1	PLATE PLACA	PIASTRA CHAPA	PLAQUE PLAAT	PLATTE PLADE	105P
61		895-11006		1	WASHER 6,6 x 12 x 1,6 mm ARANDELA	ROSETTA PIANA ANILHA	RONDELLE SLUITRING	BEILAGSCHEIBE FLADSKIVE	131R
62		431941A1		2	WASHER Curve Spring ARANDELA	ROSETTA PIANA ANILHA	RONDELLE SLUITRING	BEILAGSCHEIBE FLADSKIVE	131R

09-20		p1	11/04

CAB - REAR WINDOW
CABINA - LUNOTTO
CABINE - VITRE ARRIÈRE
HINTERES KABINENFENSTER

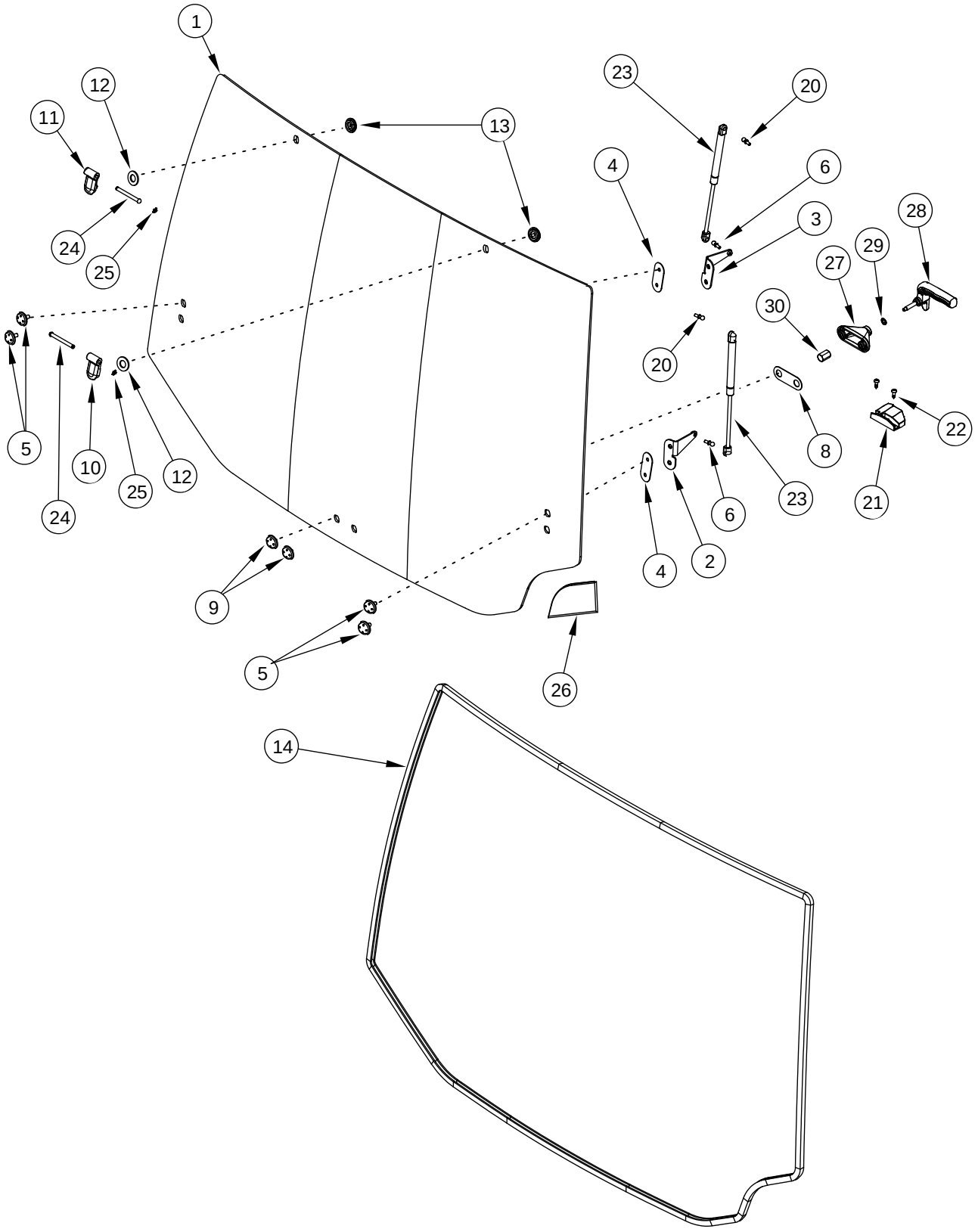

CABINA - VENTANA TRASERA
JANELA TRASEIRA DA CABINA
CABINE - ACHTERRUIT
FØRERHUS - BAGRUDE

R	N	P.N.	MOD	Q	Description Denominacion	Descrizione Denominação	Description Beschrijving	Bezeichnung Beskrivelse	L.C.
1	1, 2	242667A4		1	GLASS VIDRIO	VETRO VIDRO	VITRE VENSTERGLAS	GLAS GLAS	038V
1	3	360033A1		1	GLASS, CAB Tinted VENTANA	VETRO CABINA JANELA	VITRE DE CABINE VENSTER	KABINENGLAS KABINERUDE	069F
2		256810A1		1	SUPPORT Right Hand SOPORTE	SUPPORTO SUPORTE	SUPPORT STEUN	STÜTZE BESLAG	300S
3		256809A1		1	SUPPORT Left Hand SOPORTE	SUPPORTO SUPORTE	SUPPORT STEUN	STÜTZE BESLAG	300S
4		222787A2		2	PAD TACO	TASSELLO ESPACADOR	TAMPON PROP	EINSATZSTÜCK DYVEL	060T
5		198916A2		4	CAP TAPON DEL DEPOSITO	TAPPO SERBATOIO TAMPAO DE RESERVAT	CHAPEAU RESERVOIRDOP	KAPPE TANKDAEKSEL	052T
6		K303756		1	BALL JOINT 6 mm JUNTA DE ROTULA	GIUNTO SFERICO JUNTA ESFÉRICA	ROTULE KOGELGEWRICHT	KUGELGELENK KUGLELED	070G
8		220935A3		1	PAD TACO	TASSELLO ESPACADOR	TAMPON PROP	EINSATZSTÜCK DYVEL	060T
9		198913A3		2	PLASTIC PLUG TAPÓN PLÁSTICO	TAPPO IN PLASTICA TAPÓN PLÁSTICO	BOUCHON PLASTIQUE PLASTIC PLUG	PLASTIKSTÖPSEL PLASTICTÆNDRØR	Z412
10		176246A2		1	HINGE Right Hand BISAGRA	CERNIERA DOBRADICA	PAUMELLE HINGE	SCHARNIER HINGE	Z579
11		176245A2		1	HINGE Left Hand BISAGRA	CERNIERA DOBRADICA	CHARNIERE SCHARNIER	SCHARNIER HAENGSEL	140C
12		180361A2		2	WASHER ARANDELA	ROSETTA PIANA ANILHA	RONDELLE SLUITRING	BEILAGSCHEIBE FLADSKIVE	131R
13		198913A3		2	PLASTIC PLUG TAPÓN PLÁSTICO	TAPPO IN PLASTICA TAPÓN PLÁSTICO	BOUCHON PLASTIQUE PLASTIC PLUG	PLASTIKSTÖPSEL PLASTICTÆNDRØR	Z412
14		254772A3		1	DOOR SEAL JUNTA DE PUERTA	TENUTA, SPORTELLO GUARNICAO PORTA	JOINT DE PORTE DOOR SEAL	TÜRDICHTUNG DØRFORSEGLING	Z529
20		K303756		1	BALL JOINT 6 mm JUNTA DE ROTULA	GIUNTO SFERICO JUNTA ESFÉRICA	ROTULE KOGELGEWRICHT	KUGELGELENK KUGLELED	070G
21		186149A4		1	PLATE, STRIKER CERRADERO	SCONTRINO CHAPA BATENTE	GACHE SLAGHAMERPLAAT	SPERRPLATTE MODPLADE	062S
22		781-24620		2	SCREW M6 X 20 TORNILLO	VITE PARAFUSO	VIS SCHROEF	SCHRAUBE SKRUE	7450
23		252550A2		2	GAS STRUT COMPAS	MONTANTE CILINDRO COMPASSO	COMPAS GAS STRUT	STÜTZHEBEL CYLINDER, GASSTØDD/	Z331
24		1535323C1		2	PIN PERNO	PERNO PERNO	AXE PEN	BOLZEN STIFT	080P
25		800-437		2	CIRCLIP 7 mm RETENEDOR	ANELLO DI RITEGNO FREIO DE MOLA	CIRCLIP BOORGVEER	HALTERING LÃSERING	P019
26		254711A1		1	GROMMET PASACABLES	ANELLO PASSACAVO CASQUILHO ISOLADOR	PASSE-FIL KABELDOORGANG	TÜLLE RING	131A
		230009A4		1	HANDLE Inc. 27 - 30 MANECILLA	MANIGLIA MANIPULO	POIGNÉE HENDEL	HANDGRIFF HAANDTAG	020M

(1) Standard Cab
(2) Deluxe Cab
(3) Luxury Cab

09-20		p2	11/04

CAB - REAR WINDOW
CABINA - LUNOTTO
CABINE - VITRE ARRIÈRE
HINTERES KABINENFENSTER

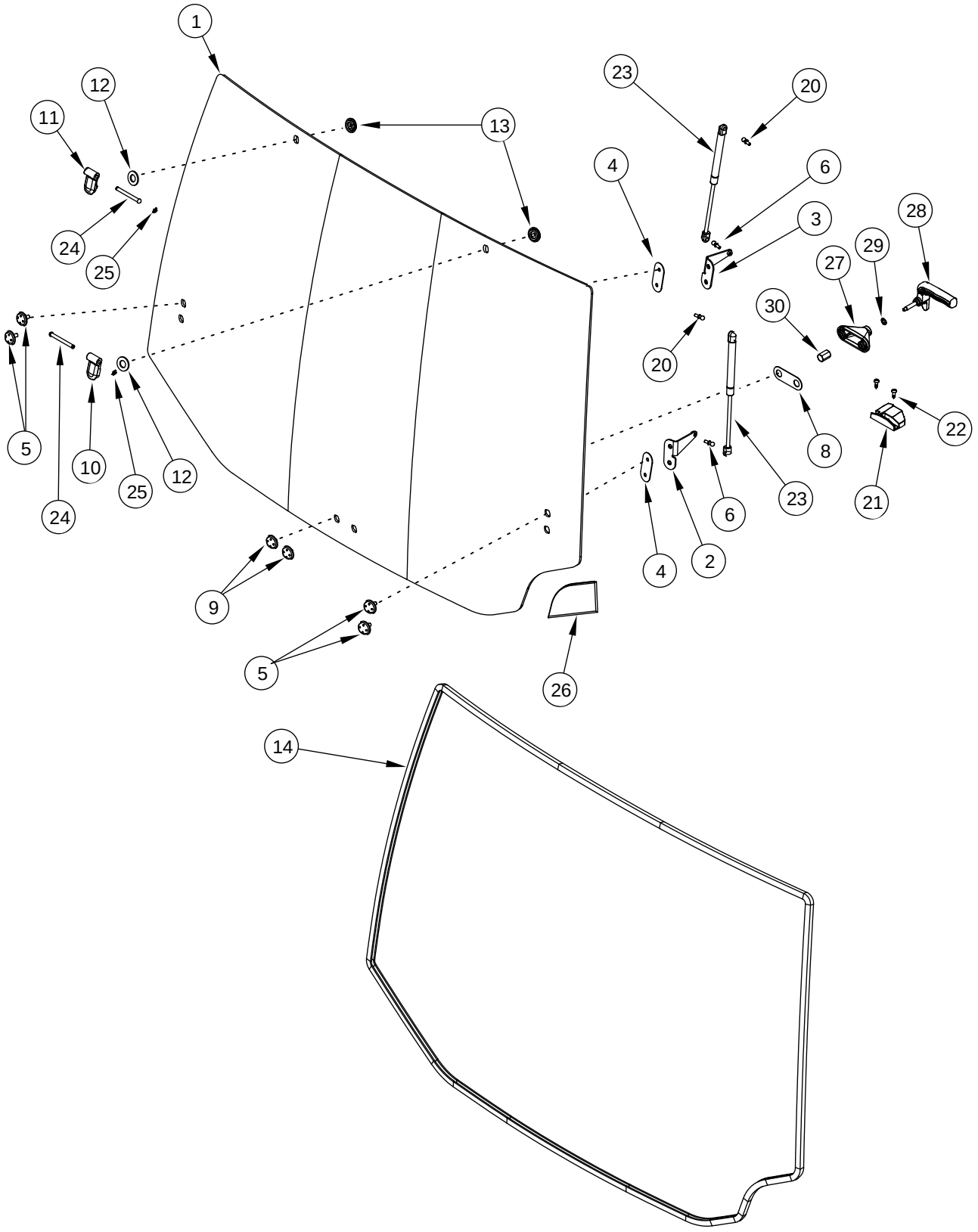

CABINA - VENTANA TRASERA
JANELA TRASEIRA DA CABINA
CABINE - ACHTERRUIT
FØRERHUS - BAGRUDE

R	N	P.N.	MOD	Q	Description Denominacion	Descrizione Denominação	Description Beschrijving	Bezeichnung Beskrivelse	L.C.
27		**NSS**		1	NOT SERVICED SEPARATELY Support				
						NON FORNITO SEPARAT	NON FOURNI SEPAREMI	KEIN ERSATZTEIL	064N
					NO SE REPARA SEPARA	NOT SERVICED SEPARA	NIET ALLEEN VERKRIJG	NOT SERVICED SEPARA	
28		**NSS**		1	NOT SERVICED SEPARATELY Handle				
						NON FORNITO SEPARAT	NON FOURNI SEPAREMI	KEIN ERSATZTEIL	064N
					NO SE REPARA SEPARA	NOT SERVICED SEPARA	NIET ALLEEN VERKRIJG	NOT SERVICED SEPARA	
29		**NSS**		1	NOT SERVICED SEPARATELY Washer				
						NON FORNITO SEPARAT	NON FOURNI SEPAREMI	KEIN ERSATZTEIL	064N
					NO SE REPARA SEPARA	NOT SERVICED SEPARA	NIET ALLEEN VERKRIJG	NOT SERVICED SEPARA	
30		**NSS**		1	NOT SERVICED SEPARATELY Nut, Special				
						NON FORNITO SEPARAT	NON FOURNI SEPAREMI	KEIN ERSATZTEIL	064N
					NO SE REPARA SEPARA	NOT SERVICED SEPARA	NIET ALLEEN VERKRIJG	NOT SERVICED SEPARA	

09-21		p1	11/04

CAB - FIXED GLASS
CABINA - CRISTALLO FISSO
CABINE - VITRE FIXE
FIXIERTES KABINENFENSTERGLAS

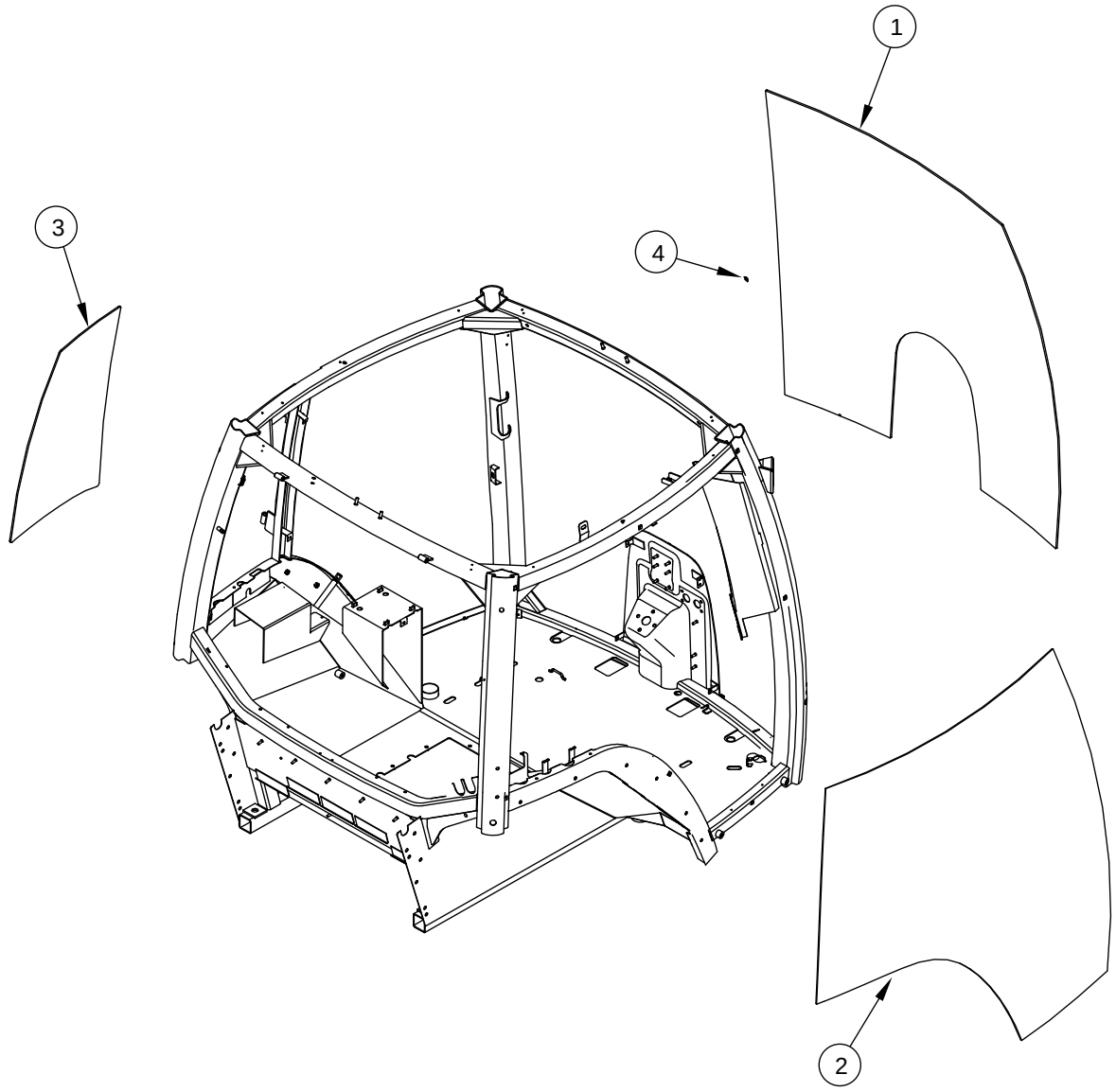

CABINA - CRISTAL FIJO
CABINA DE VIDRO FIXO
CABINE - VASTE BEGLAZING
FØRERHUS - FASTMONTERET GLAS

R	N	P.N.	MOD	Q	Description Denominacion	Descrizione Denominação	Description Beschrijving	Bezeichnung Beskrivelse	L.C.
1		242537A5		1	WINDSHIELD Windshield PARABRISAS	PARABRISA PARA-BRISA	PARE-BRISE WINDSCREEN	WINDSCHUTZSCHEIBE FORRUDE	P081
2		242536A5		1	GLASS, CAB Right Hand VENTANA	VETRO CABINA JANELA	VITRE DE CABINE VENSTER	KABINENGLAS KABINERUDE	069F
3		242539A4		1	GLASS, CAB Left Hand VENTANA	VETRO CABINA JANELA	VITRE DE CABINE VENSTER	KABINENGLAS KABINERUDE	069F
4		P741441		20	SPACER SEPARADOR	DISTANZIALE ESPACADOR	ENTRETOISE AFSTANDSRING	DISTANZSTÜCK AFSTANDSSTYKKE	075D
10		305688A1		1	TOOL Not Illustrated HERRAMIENTA	UTENSILE FERRAMENTA	OUTIL TOOL	WERKZEUG VÆRKTØJ	9120

09-22		p1	12/04

MIRRORS
SPECCHIETTI
RÉTROVISEURS
SPIEGEL

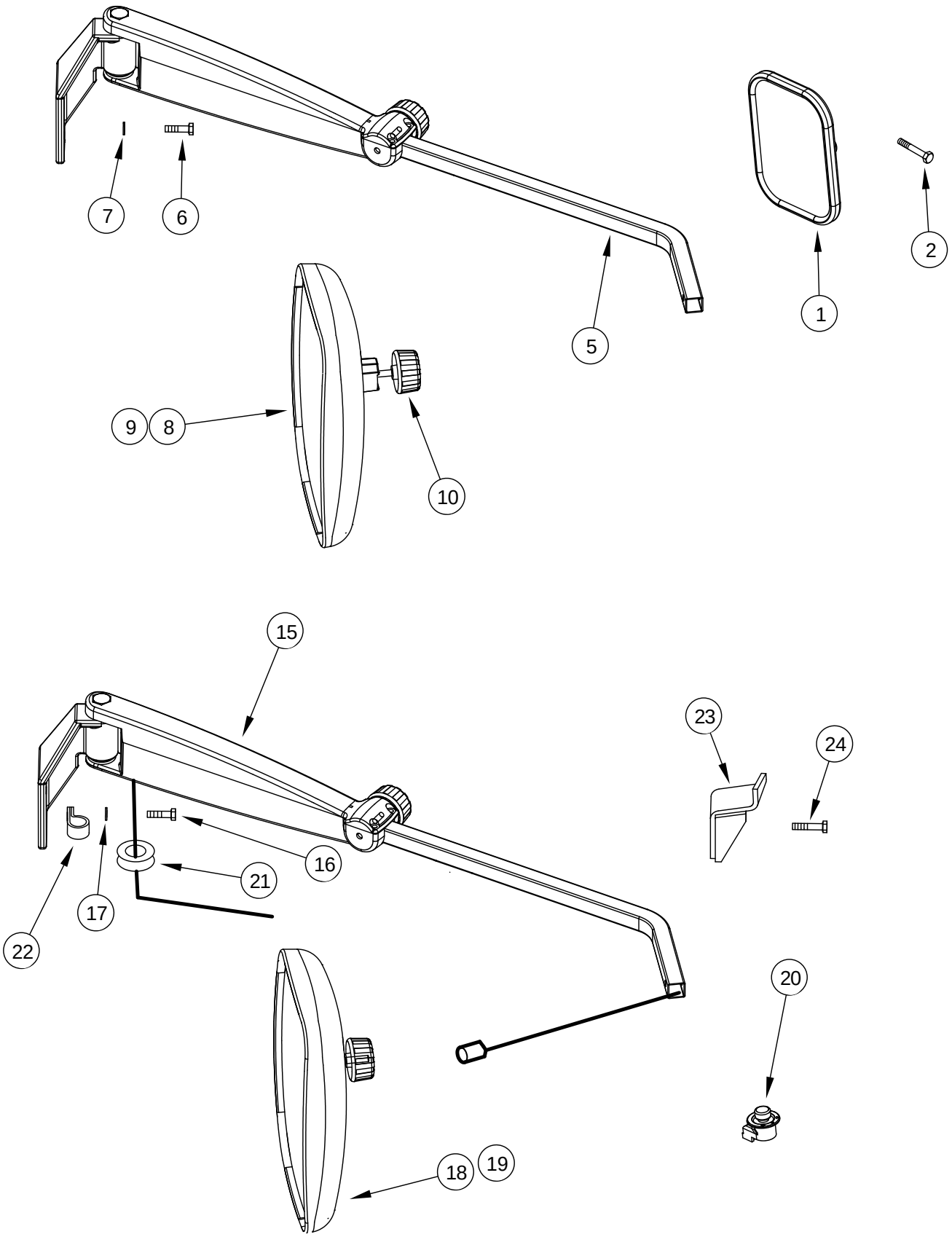

ESPEJOS
ESPELHOS
SPIEGELS
SPEJLE

R	N	P.N.	MOD	Q	Description Denominacion	Descrizione Denominação	Description Beschrijving	Bezeichnung Beskrivelse	L.C.
1		235992A1		1	MIRROR Interior ESPEJO	RIFLETTORE ESPELHO	RETROVISEUR MIRROR	SPIEGEL MIRROR	5580
2		779-34616		2	SCREW M6,3 x 16 TORNILLO	VITE PARAFUSO	VIS SCHROEF	SCHRAUBE SKRUE	7450
5		297024A2		1	SUPPORT ASSY. Right Hand, Shown APOYADERO (CONJUNT	SUPPORTO, COMPLESS SUPORTE CONJUNTO	SUPPORT (ASSEMBLE) SUPPORT ASSY.	STUETZE (KPLT.) SUPPORT ASSY.	P427
5		297025A2		1	SUPPORT ASSY. Left Hand APOYADERO (CONJUNT	SUPPORTO, COMPLESS SUPORTE CONJUNTO	SUPPORT (ASSEMBLE) SUPPORT ASSY.	STUETZE (KPLT.) SUPPORT ASSY.	P427
6		614-8030		6	SCREW M8 x 30; 8.8 TORNILLO	VITE PARAFUSO	VIS SCHROEF	SCHRAUBE SKRUE	P136
7		895-11008		6	WASHER 9 x 17 x 1,6 mm ARANDELA	ROSETTA PIANA ANILHA	RONDELLE SLUITRING	BEILAGSCHEIBE FLADSKIVE	131R
8		297017A1		2	MIRROR Inc. 9, 10 ESPEJO	RIFLETTORE ESPELHO	RETROVISEUR MIRROR	SPIEGEL MIRROR	5580
9		324437A1		1	MIRROR, REPLACEMENT SOSTITUCION ESPEJO	SOSTITUZIONE SPECCH ESPELHO SUB.	MIROIR DE REMPLACEM VERVANGSPIEGEL	SPIEGEL, ERSATZ SPEJLHOVED	187S
10		324439A1		1	BUTTON BOTON	BOTTONE BOTAO	BOUTON KNOP	KNOPF KNAP	120B
15		297026A2		1	ARM ASSY. Right Hand, Shown BRAZO (CONJUNTO)	BRACCIO, COMPLESSIV BRACO CONJUNTO	BRAS (ASSEMBLE) ARM ASSY.	ARM (KPLT.) ARM ASSY.	P502
15		297027A2		1	ARM ASSY. Left Hand BRAZO (CONJUNTO)	BRACCIO, COMPLESSIV BRACO CONJUNTO	BRAS (ASSEMBLE) ARM ASSY.	ARM (KPLT.) ARM ASSY.	P502
16		614-8030		6	SCREW M8 x 30; 8.8 TORNILLO	VITE PARAFUSO	VIS SCHROEF	SCHRAUBE SKRUE	P136
17		895-11008		6	WASHER 9 x 17 x 1,6 mm ARANDELA	ROSETTA PIANA ANILHA	RONDELLE SLUITRING	BEILAGSCHEIBE FLADSKIVE	131R
18		297021A1		2	MIRROR Remote Control, Inc. 19 ESPEJO	RIFLETTORE ESPELHO	RETROVISEUR MIRROR	SPIEGEL MIRROR	5580
19		324437A1		1	MIRROR, REPLACEMENT SOSTITUCION ESPEJO	SOSTITUZIONE SPECCH ESPELHO SUB.	MIROIR DE REMPLACEM VERVANGSPIEGEL	SPIEGEL, ERSATZ SPEJLHOVED	187S
20		280627A1		1	SWITCH Remote Control CONTACTOR	INTERRUTTORE INTERRUPTOR	CONTACTEUR SCHAKELAAR	SCHALTER KONTAKT	075I
21		182045A1		2	GROMMET PASACABLES	ANELLO PASSACAVO CASQUILHO ISOLADOR	PASSE-FIL KABELDOORGANG	TÜLLE RING	131A
22		515-2395		2	CLAMP 3/8 ID COLLAR	MORSETTO BRACADEIRA	COLLIER CLAMP	SCHELLE CLAMP	1640
23		375261A1	a	1	BRACKET Right Hand, Shown PIEZA DE SOPORTE	STAFFA BRACADEIRA	PATTE FIXATION STEUNBEUGEL	HALTERUNG BESLAG	225S
23		374653A1	a	1	BRACKET Left Hand PIEZA DE SOPORTE	STAFFA BRACADEIRA	PATTE FIXATION STEUNBEUGEL	HALTERUNG BESLAG	225S
24		514-637	a	2	BOLT M8 x 35 TORNILLO	BULLONE PARAFUSO	BOULON BOUT	SCHAUBENBOLZEN SKRUE	0810

(a) BSN JAZ131821

09-23		p1	11/04

CAB - HEADLINER, STANDARD TRIM
CABINA - CONSOLLE SUPERIORE, RIFINITURA STANDARD
CABINE - GARNITURE STANDARD
STANDARDLEISTE FÜR KABINEN-ÜBERKOPFKONSOLE

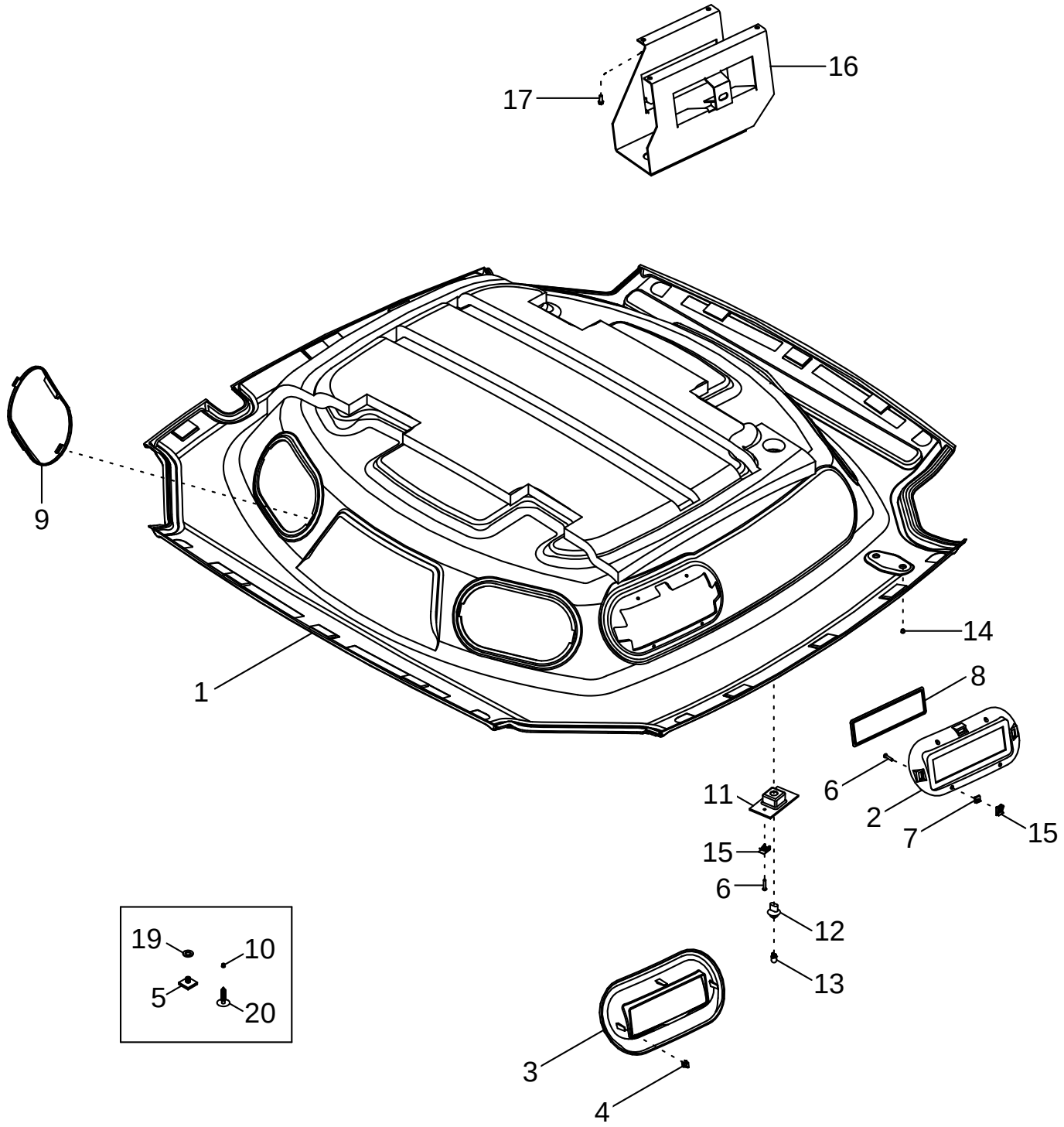

CABINA - REVESTIMIENTO ESTÁNDAR
FORRO DO TECTO DA CABINA - FORRO STANDARD
CABINE - DAKBEKLEDING, STANDAARD-AFWERKING
FØRERHUS - LOFTSBETRÆK, STANDARD PYNTELISTE

R	N	P.N.	MOD	Q	Description Denominacion	Descrizione Denominação	Description Beschrijving	Bezeichnung Beskrivelse	L.C.
1		400827A2		1	LINING, ROOF REVESTIMIENTO/TECHO	RIVESTIMENTO REVESTIMENTO TETO	HABILLEMENT DE TOIT LINING, ROOF	DACHVERKLEIDUNG HEADLINER	P791
2		358790A1		1	ANCHOR Radio FIJACION	ANCORAGGIO FIXADOR	PIECE DE FIXATION ANKER	VERANKERUNG FIXATION	P031
3		358772A1		1	BEZEL MARCO	MOSTRINA CHAPA DE ORNAMENTO	ENCADREMENT SIERPLAAT	DECKRING ORNAMENTERING	0680
4		278316A2		3	CLIP SUJETADOR	FERMAGLIO FIXADOR	CLIP KLEM	KLAMMER KLIPS	045F
5		409206A1		12	FASTENER BOTON DE RESORTE	BOTTONE A SCATTO PARAFUSO	ATTACHE DRUKKNOP	SCHALTKNOPF UDLOESERKNAP	123B
6		761-17325		6	SCREW M4,2 x 25 TORNILLO	VITE PARAFUSO	VIS SCHROEF	SCHRAUBE SKRUE	7450
7		177269A1		2	NUT TUERCA	DADO PORCA	ECROU MOER	MUTTER MØTRIK	010D
8		1535219C1		1	COVER Without Radio TAPADERA	COPERCHIO COBERTA	COUVERCLE DEKSEL	DECKEL DÆKSEL	265C
9		358683A1		4	GRILLE Speaker Cover CALANDRIA	MASCHERINA GRELHA	CALANDRE ROOSTER	GITTER GITTER	101G
10		292675A1		2	PLUG TAPÓN	TAPPO BUJÃO	BOUCHON PLUG	STOPFEN PROP	050T
11		368143A1		1	LAMP Inc. 12, 13 LAMPARA	LAMPADA LAMPADA	LAMPE LAMP	LEUCHTE LAMP	4960
12		107329C1		1	CABLE ASSY. CABLE (CONJUNTO)	CAVO, COMPLESSIVO CABO CONJUNTO	CABLE (ASSEMBLE) CABLE ASSY.	KABEL (KPLT.) CABLE ASSY.	P494
13		D71346		1	LAMP, TAIL LUZ POSTERIOR	FANALE POSTERIORE LUZ POSTERIOR	FEU ARRIERE ACHTERLICHT	SCHLUSSLEUCHTE BAGLYGTE	013F
14		292675A1		1	PLUG TAPÓN	TAPPO BUJÃO	BOUCHON PLUG	STOPFEN PROP	050T
15		442244A1		6	NUT TUERCA	DADO PORCA	ECROU MOER	MUTTER MØTRIK	010D
16		428264A4		1	BRACKET PIEZA DE SOPORTE	STAFFA BRACADEIRA	PATTE FIXATION STEUNBEUGEL	HALTERUNG BESLAG	225S
17		758-5		4	SCREW M5,5 x 15 TORNILLO	VITE PARAFUSO	VIS SCHROEF	SCHRAUBE SKRUE	7450
19		895-11010		2	WASHER 11 x 20 x 2 mm ARANDELA	ROSETTA PIANA ANILHA	RONDELLE SLUITRING	SCHEIBE FLADSKIVE	9720
20		394013A1		1	FASTENER BOTON DE RESORTE	BOTTONE A SCATTO PARAFUSO	ATTACHE DRUKKNOP	SCHALTKNOPF UDLOESERKNAP	123B

09-24		p1	11/04

CAB - HEADLINER, DELUXE AND LUXURY TRIM
CABINA - CONSOLLE SUPERIORE, RIFINITURE DELUXE E LUXURY
CABINE - GARNITURE DELUXE ET LUXURY
DELUXE- UND LUXUSLEISTE FÜR KABINEN-ÜBERKOPFKONSOLE

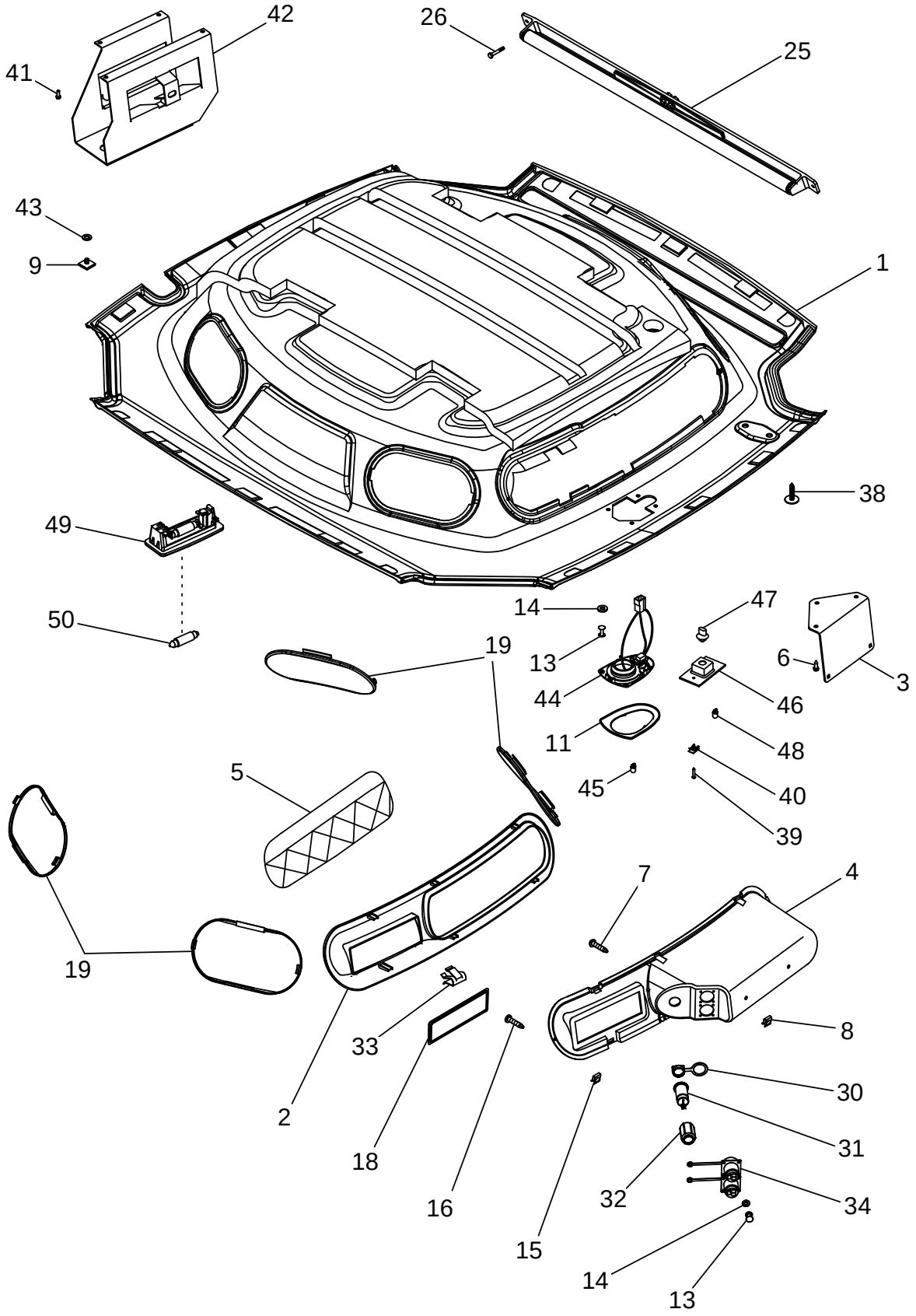

CABINA - REVESTIMIENTO DELUXE Y LUXURY
FORRO DO TECTO DA CABINA - FORRO DELUXE E DE LUXO
CABINE - DAKBEKLEDING, DELUXE- EN LUXURY- AFWERKING
FØRERHUS - LOFTSBETRÆK, DELUXE OG LUKSUS PYNTELISTE

R	N	P.N.	MOD	Q	Description Denominacion	Descrizione Denominação	Description Beschrijving	Bezeichnung Beskrivelse	L.C.
1		400829A2		1	LINING, ROOF REVESTIMIENTO/TECHC	RIVESTIMENTO REVESTIMENTO TETO	HABILLEMENT DE TOIT LINING, ROOF	DACHVERKLEIDUNG HEADLINER	P791
2		358794A2		1	BEZEL MARCO	MOSTRINA CHAPA DE ORNAMENTC	ENCADREMENT SIERPLAAT	DECKRING ORNAMENTERING	0680
3		409205A2		1	BRACKET PIEZA DE SOPORTE	STAFFA BRACADEIRA	PATTE FIXATION STEUNBEUGEL	HALTERUNG BESLAG	225S
		358795A1		1	BOX Inc. 4, 5 CAJA	SCATOLA CAIXA	BOÎTIER KAST	KISTE KASSE	0960
4		358797A1		1	BOX CAJA	SCATOLA CAIXA	BOÎTIER KAST	KISTE KASSE	0960
5		358798A1		1	RETAINER RETENEDOR	RITEGNO RETENTOR	RETENEUR HOUDER	HALTEVORRICHTUNG HOLDER	109R
6		758-5		8	SCREW M5,5 x 15 TORNILLO	VITE PARAFUSO	VIS SCHROEF	SCHRAUBE SKRUE	7450
7		761-17325		2	SCREW M4,2 x 25 TORNILLO	VITE PARAFUSO	VIS SCHROEF	SCHRAUBE SKRUE	7450
8		322072A2		2	FASTENER BOTON DE RESORTE	BOTTONE A SCATTO PARAFUSO	ATTACHE DRUKKNOP	SCHALTKNOPF UDLOESERKNAP	123B
9		409206A1		12	FASTENER BOTON DE RESORTE	BOTTONE A SCATTO PARAFUSO	ATTACHE DRUKKNOP	SCHALTKNOPF UDLOESERKNAP	123B
11		360364A1		1	BEZEL MARCO	MOSTRINA CHAPA DE ORNAMENTC	ENCADREMENT SIERPLAAT	DECKRING ORNAMENTERING	0680
13		151-535		12	RIVET Pop, 1/8 x 15/32 inch REMACHE	RIBATTINO REBITE	RIVET KLINKNAGEL	NIET NITTE	7220
14		895-11003		12	WASHER 3,2 x 7 x 0,5 mm ARANDELA	ROSETTA PIANA ANILHA	RONDELLE SLUITRING	SCHEIBE FLADSKIVE	9720
15		442245A1		2	NUT TUERCA	DADO PORCA	ECROU MOER	MUTTER MØTRIK	010D
16		104033C2		2	SCREW No. 10 x 3/4 TORNILLO	VITE PARAFUSO	VIS SCHROEF	SCHRAUBE SKRUE	040V
18		1535219C1		1	COVER Without Radio TAPADERA	COPERCHIO COBERTA	COUVERCLE DEKSEL	DECKEL DÆKSEL	265C
19		358683A1		4	GRILLE Speaker Cover CALANDRIA	MASCHERINA GRELHA	CALANDRE ROOSTER	GITTER GITTER	101G
25		315459A2	a	1	VISOR, SUN PARASOL	PARASOLE PARA-SOL	PARE-SOLEIL VISOR, SUN	SONNENBLENDE VISOR, SUN	P680
25		87425480	b	1	VISOR, SUN PARASOL	PARASOLE PARA-SOL	PARE-SOLEIL VISOR, SUN	SONNENBLENDE VISOR, SUN	P680
26		780-14625		2	SCREW M3 X 25 TORNILLO	VITE PARAFUSO	VIS SCHROEF	SCHRAUBE SKRUE	040V
30		190812A1		1	COVER TAPADERA	COPERCHIO COBERTA	COUVERCLE DEKSEL	DECKEL DÆKSEL	265C
31		308904A1		1	LIGHTER, CIGARETTE Outlet ENCENDEDOR DE CIGAI	ACCENDISIGARI ISQUEIRO	ALLUME-CIGARE SIGARENAANSTEKER	ZIGARRETTENANZÜNDE CIGARETTAENDER	005A
32		308905A1		1	LIGHTER, CIGARETTE ENCENDEDOR DE CIGAI	ACCENDISIGARI ISQUEIRO	ALLUME-CIGARE SIGARENAANSTEKER	ZIGARRETTENANZÜNDE CIGARETTAENDER	005A

(a) BSN JAZ132959
(b) ASN JAZ132959

09-24		p2	11/04

CAB - HEADLINER, DELUXE AND LUXURY TRIM
CABINA - CONSOLLE SUPERIORE, RIFINITURE DELUXE E LUXURY
CABINE - GARNITURE DELUXE ET LUXURY
DELUXE- UND LUXUSLEISTE FÜR KABINEN-ÜBERKOPFKONSOLE

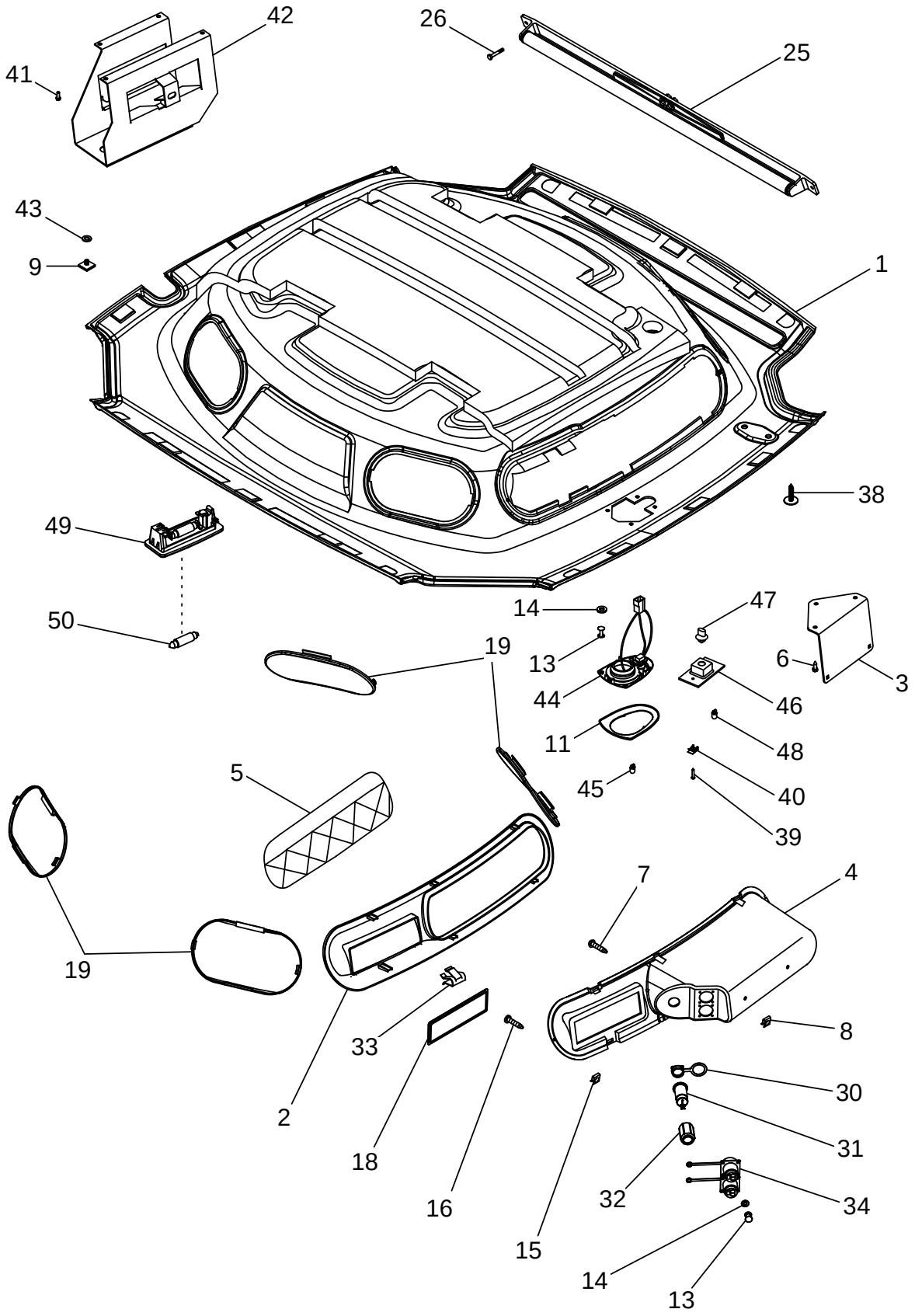

CABINA - REVESTIMIENTO DELUXE Y LUXURY
FORRO DO TECTO DA CABINA - FORRO DELUXE E DE LUXO
CABINE - DAKBEKLEDING, DELUXE- EN LUXURY- AFWERKING
FØRERHUS - LOFTSBETRÆK, DELUXE OG LUKSUS PYNTELISTE

R	N	P.N.	MOD	Q	Description Denominacion	Descrizione Denominação	Description Beschrijving	Bezeichnung Beskrivelse	L.C.
33		308538A2		6	CLIP SUJETADOR	FERMAGLIO FIXADOR	CLIP KLEM	KLAMMER KLIPS	045F
34		227739A2		2	CONNECTOR CONECTOR	CONNESSIONE CONECTOR	CONNECTEUR VERBINDING	STECKVERBINDUNG ELI STIK	235C
38		333772A1		2	PLUG TAPÓN	TAPPO BUJÃO	BOUCHON PLUG	STOPFEN PROP	050T
39		760-17316		2	SCREW M4,2 x 16 TORNILLO	VITE PARAFUSO	VIS SCHROEF	SCHRAUBE SKRUE	7450
40		442244A1		2	NUT TUERCA	DADO PORCA	ECROU MOER	MUTTER MØTRIK	010D
41		151-537		4	RIVET Pop, 1/8 x 5/8 REMACHE	RIBATTINO REBITE	RIVET KLINKNAGEL	NIET NITTE	7220
42		428264A4		1	BRACKET PIEZA DE SOPORTE	STAFFA BRACADEIRA	PATTE FIXATION STEUNBEUGEL	HALTERUNG BESLAG	225S
43		895-11010		2	WASHER 11 x 20 x 2 mm ARANDELA	ROSETTA PIANA ANILHA	RONDELLE SLUITRING	SCHEIBE FLADSKIVE	9720
44		372892A1		1	LAMP Inc.45 FARO	FANALE FAROL	LAMPE LAMP	LEUCHTE LYGTE	009F
45		373114A1		1	BULB BOMBILLA	LAMPADA LAMPADA	AMPOULE LAMP	GLÜHBIRNE PÆRE	030L
46		368143A1		1	LAMP Inc. 47, 48 LAMPARA	LAMPADA LAMPADA	LAMPE LAMP	LEUCHTE LAMP	4960
47		107329C1		1	CABLE ASSY. CABLE (CONJUNTO)	CAVO, COMPLESSIVO CABO CONJUNTO	CABLE (ASSEMBLE) CABLE ASSY.	KABEL (KPLT.) CABLE ASSY.	P494
48		D71346		1	LAMP, TAIL LUZ POSTERIOR	FANALE POSTERIORE LUZ POSTERIOR	FEU ARRIERE ACHTERLICHT	SCHLUSSLEUCHTE BAGLYGTE	013F
49		1983391C1		1	LAMP Inc. 50 FARO	FANALE FAROL	LAMPE LAMP	LEUCHTE LYGTE	009F
50		E35556		1	BULB BOMBILLA	LAMPADA LAMPADA	AMPOULE LAMP	GLÜHBIRNE PÆRE	030L

09-25		p1	12/04

CAB - FLOOR MAT AND INSULATION
CABINA - TAPPETINO E ISOLAMENTO
CABINE - TAPIS DE SOL ET ISOLATION
KABINEN-BODENMATTE UND ISOLIERUNG

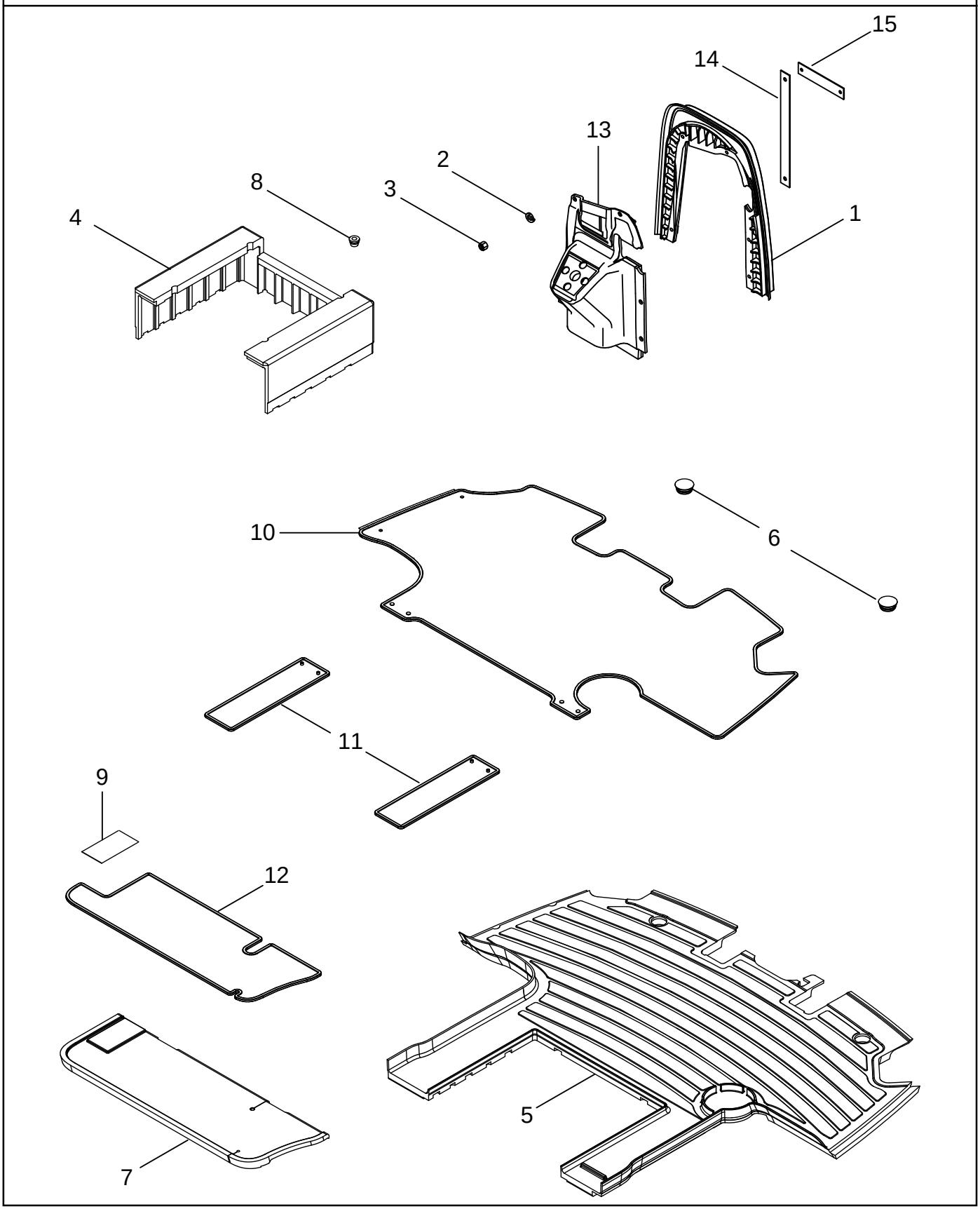

CABINA - ALFOMBRILLA Y AISLAMIENTO
TAPETE DO CHÃO DA CABINA E ISOLAMENTO
CABINE - VLOERMAT EN ISOLATIE
FØRERHUS - GULVMÅTTE OG ISOLERING

R	N	P.N.	MOD	Q	Description Denominacion	Descrizione Denominação	Description Beschrijving	Bezeichnung Beskrivelse	L.C.
1		446822A2		1	PARTITION Firewall, Outer TABIQUE	PARTIZIONE DIVISAO	CLOISON PARTITION	ZWISCHENWAND PARTITION	Z443
2		895-25008		5	WASHER 9 x 24 x 2 mm ARANDELA	ROSETTA PIANA ANILHA	RONDELLE SLUITRING	SCHEIBE FLADSKIVE	9720
3		832-10408		5	NUT M8; 8 TUERCA	DADO PORCA	ECROU MOER	MUTTER MØTRIK	010D
4		254325A3		1	SKIRT FALDA	ORLO BORDA	JUPE SKIRT	GEWEBEKANTE SKØRTE	7970
5	1, 2	297008A4		1	MAT, FLOOR Inc. 6 TAPETE DE SUELO	TAPPETINO TAPETE DE SUELO	TAPIS DE PLANCHER MAT, FLOOR	BODENMATTE GULVMÅTTE	Z068
5	3	357830A1		1	MAT, FLOOR Inc. 6 TAPETE DE SUELO	TAPPETINO TAPETE DE SUELO	TAPIS DE PLANCHER MAT, FLOOR	BODENMATTE GULVMÅTTE	Z068
6	1, 2	281848A1		2	PLUG TAPÓN	TAPPO BUJÃO	BOUCHON PLUG	STOPFEN PROP	050T
6	3	357829A1		1	PLUG TAPÓN	TAPPO BUJAO	BOUCHON PLUG	STOPFEN PROP	6400
7		298571A2	a	1	COVER Shelf TAPADERA	COPERCHIO COBERTA	COUVERCLE DEKSEL	DECKEL DÆKSEL	265C
7		87442169	b	1	COVER Shelf TAPADERA	COPERCHIO COBERTA	COUVERCLE DEKSEL	DECKEL DÆKSEL	265C
8		182220A1		1	GROMMET If Equipped PASACABLES	ANELLO PASSACAVO CASQUILHO ISOLADOR	PASSE-FIL KABELDOORGANG	TÜLLE RING	131A
9		297980A1		1	DECAL CALCOMANIA	DECALCOMANIA DECALCOMANIA	DECALCOMANIE DECAL	ABZIEHBILD TRANSFER	012D
	3	360437A1		1	CARPET Inc. 10 - 12 ALFOMBRA	TAPPETO PARA-SOL	CARPETTE CARPET	TEPPICH TÆPPE	P015
10	3	357072A1		1	CARPET Front ALFOMBRA	TAPPETO PARA-SOL	CARPETTE CARPET	TEPPICH TÆPPE	P015
11	3	357074A1		2	CARPET Side ALFOMBRA	TAPPETO PARA-SOL	CARPETTE CARPET	TEPPICH TÆPPE	P015
12	3	357075A1		1	CARPET Shelf ALFOMBRA	TAPPETO PARA-SOL	CARPETTE CARPET	TEPPICH TÆPPE	P015
13		446820A2		1	PARTITION Firewall, Inner TABIQUE	PARETE PAREDE	CLOISON WAND	TRENNWAND VAEG	033P
14		446823A1		1	STRAP BANDA	BANDELLA BANDA	SANGLE RIEM	GURT STROP	532B
15		446824A2		1	STRAP BANDA	BANDELLA BANDA	SANGLE RIEM	GURT STROP	532B

(1) Standard Cab
(2) Deluxe Cab
(3) Luxury Cab
(a) BSN JAZ133187
(b) ASN JAZ133187

09-26		p1	11/04

CAB - TRIM, FENDERS
CABINA - RIFINITURE, PARAFANGHI
CABINE - GARNITURE DES GARDE-BOUE
KABINENLEISTE, -KOTFLÜGEL

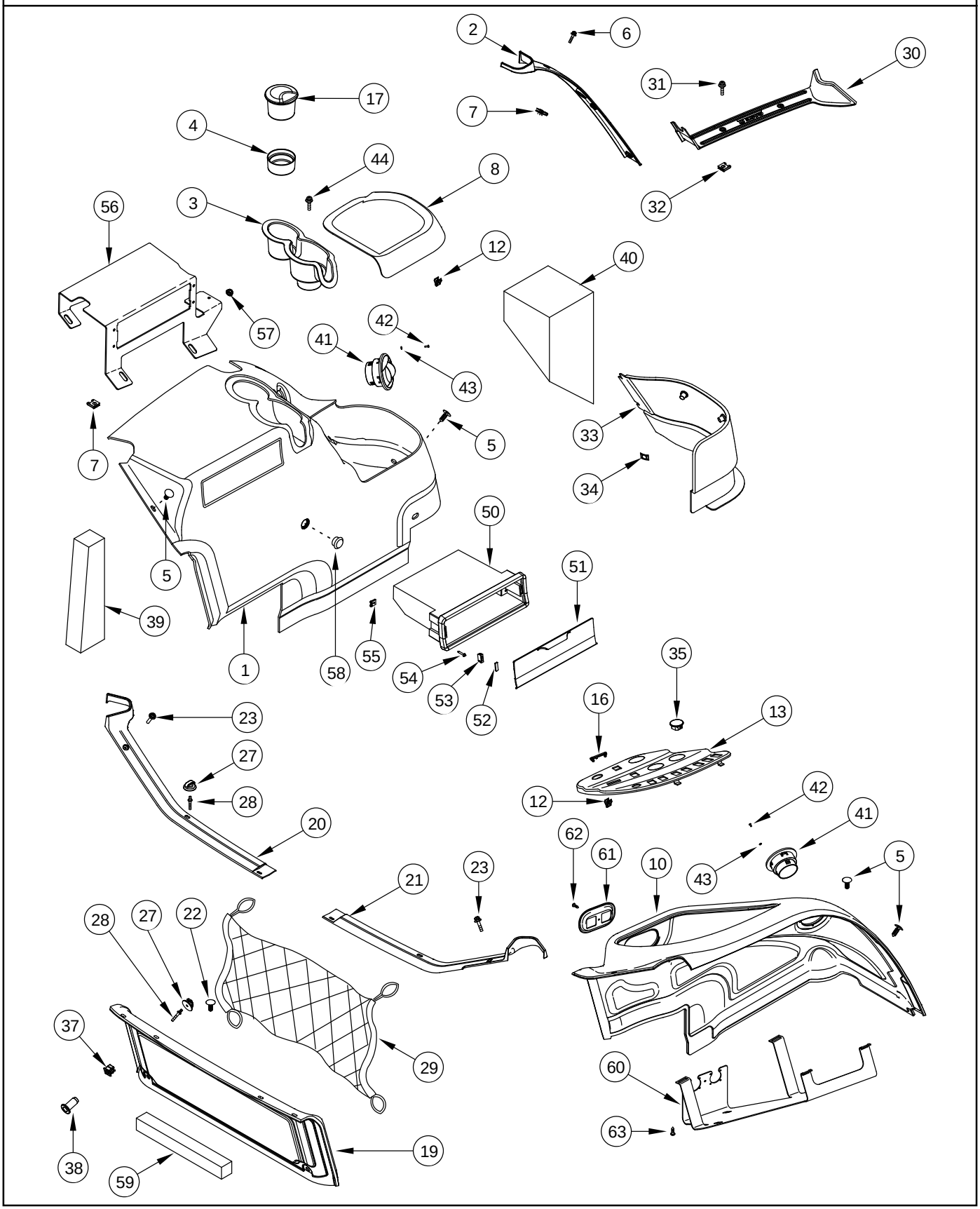

CABINA - REVESTIMIENTO, GUARDABARROS
COBERTURA DOS GUARDA-LAMAS DA CABINA
CABINE - AFWERKING, SPATBORDEN
FØRERHUS - PYNTELISTE, SKÆRME

R	N	P.N.	MOD	Q	Description Denominacion	Descrizione Denominação	Description Beschrijving	Bezeichnung Beskrivelse	L.C.
1	1	426575A1		1	TRIM PANEL Left Hand, Inc. 41				
						TAPPEZZERIA	PANNEAU-TAPISSERIE	ARMATURENVERKLEIDU	032T
					TAPICERIA	TAPECARIA	AANPASBARE PANELEN	TRIM PANEL	
1	2	426576A1		1	TRIM PANEL Left Hand, Inc. 41				
						TAPPEZZERIA	PANNEAU-TAPISSERIE	ARMATURENVERKLEIDU	032T
					TAPICERIA	TAPECARIA	AANPASBARE PANELEN	TRIM PANEL	
2		358235A1		1	TRIM PANEL	TAPPEZZERIA	PANNEAU-TAPISSERIE	ARMATURENVERKLEIDU	032T
					TAPICERIA	TAPECARIA	AANPASBARE PANELEN	TRIM PANEL	
3		358805A1		1	HOLDER	SOSTEGNO	SUPPORT	HALTER	174S
					SOPORTE	SUPORTE	HOUDER	HOLDER	
4		301901A1		1	INSERT	INSERTO	INSERT	EINSATZ	055I
					INTRODUCTOR	POSTICO	TUSSENSTUK	INDSATS	
5		93199C1		15	FASTENER	BOTTONE A SCATTO	ATTACHE	SCHALTKNOPF	123B
					BOTON DE RESORTE	PARAFUSO	DRUKKNOP	UDLOESERKNAP	
6		360362A1		3	SCREW No. 10 x 1	VITE	VIS	SCHRAUBE	7450
					TORNILLO	PARAFUSO	SCHROEF	SKRUE	
7		131-832		4	NUT No. 10	DADO	ECROU	MUTTER	5780
					TUERCA	PORCA	MOER	MØTRIK	
8		358806A1		1	COVER	COPERCHIO	COUVERCLE	DECKEL	2250
					TAPA	TAMPA	COVER	COVER	
10		405012A1	a	1	TRIM PANEL Right Hand, Inc. 41				
						TAPPEZZERIA	PANNEAU-TAPISSERIE	ARMATURENVERKLEIDU	032T
					TAPICERIA	TAPECARIA	AANPASBARE PANELEN	TRIM PANEL	
10		87444946	b	1	TRIM PANEL Right Hand	TAPPEZZERIA	PANNEAU-TAPISSERIE	ARMATURENVERKLEIDU	032T
					TAPICERIA	TAPECARIA	AANPASBARE PANELEN	TRIM PANEL	
12		278316A2		6	CLIP	FERMAGLIO	CLIP	KLAMMER	045F
					SUJETADOR	FIXADOR	KLEM	KLIPS	
13	3	409304A2		1	PANEL	PANNELLO	PANNEAU	TAFEL	025P
					CONTRAPANEL	PAINEL	PANEELWERK	PANEL	
13	4	405010A2		1	PANEL	PANNELLO	PANNEAU	TAFEL	025P
					CONTRAPANEL	PAINEL	PANEELWERK	PANEL	
16	3	302118A1		1	COVER	COPERCHIO	COUVERCLE	DECKEL	265C
					TAPADERA	COBERTA	DEKSEL	DÆKSEL	
17		302456A1		1	ASH TRAY	PORTACENERE	CENDRIER	ASCHENBECHER	183P
					CENICERO	CINZEIRO	ASBAK	ASKEBÆGER	
19		426580A1		1	TRIM PANEL Rear	TAPPEZZERIA	PANNEAU-TAPISSERIE	ARMATURENVERKLEIDU	032T
					TAPICERIA	TAPECARIA	AANPASBARE PANELEN	TRIM PANEL	
20		357169A2		1	TRIM PANEL Left Hand	TAPPEZZERIA	PANNEAU-TAPISSERIE	ARMATURENVERKLEIDU	032T
					TAPICERIA	TAPECARIA	AANPASBARE PANELEN	TRIM PANEL	
21		357168A2		1	TRIM PANEL Right Hand	TAPPEZZERIA	PANNEAU-TAPISSERIE	ARMATURENVERKLEIDU	032T
					TAPICERIA	TAPECARIA	AANPASBARE PANELEN	TRIM PANEL	
22		93199C1		2	FASTENER	BOTTONE A SCATTO	ATTACHE	SCHALTKNOPF	123B
					BOTON DE RESORTE	PARAFUSO	DRUKKNOP	UDLOESERKNAP	

(1) Without CD Player
(2) With CD Player
(3) Without Auto Temp Control
(4) With Auto Temp Control
(a) BSN JAZ132383
(b) ASN JAZ132383

09-26		p2	11/04

CAB - TRIM, FENDERS
CABINA - RIFINITURE, PARAFANGHI
CABINE - GARNITURE DES GARDE-BOUE
KABINENLEISTE, -KOTFLÜGEL

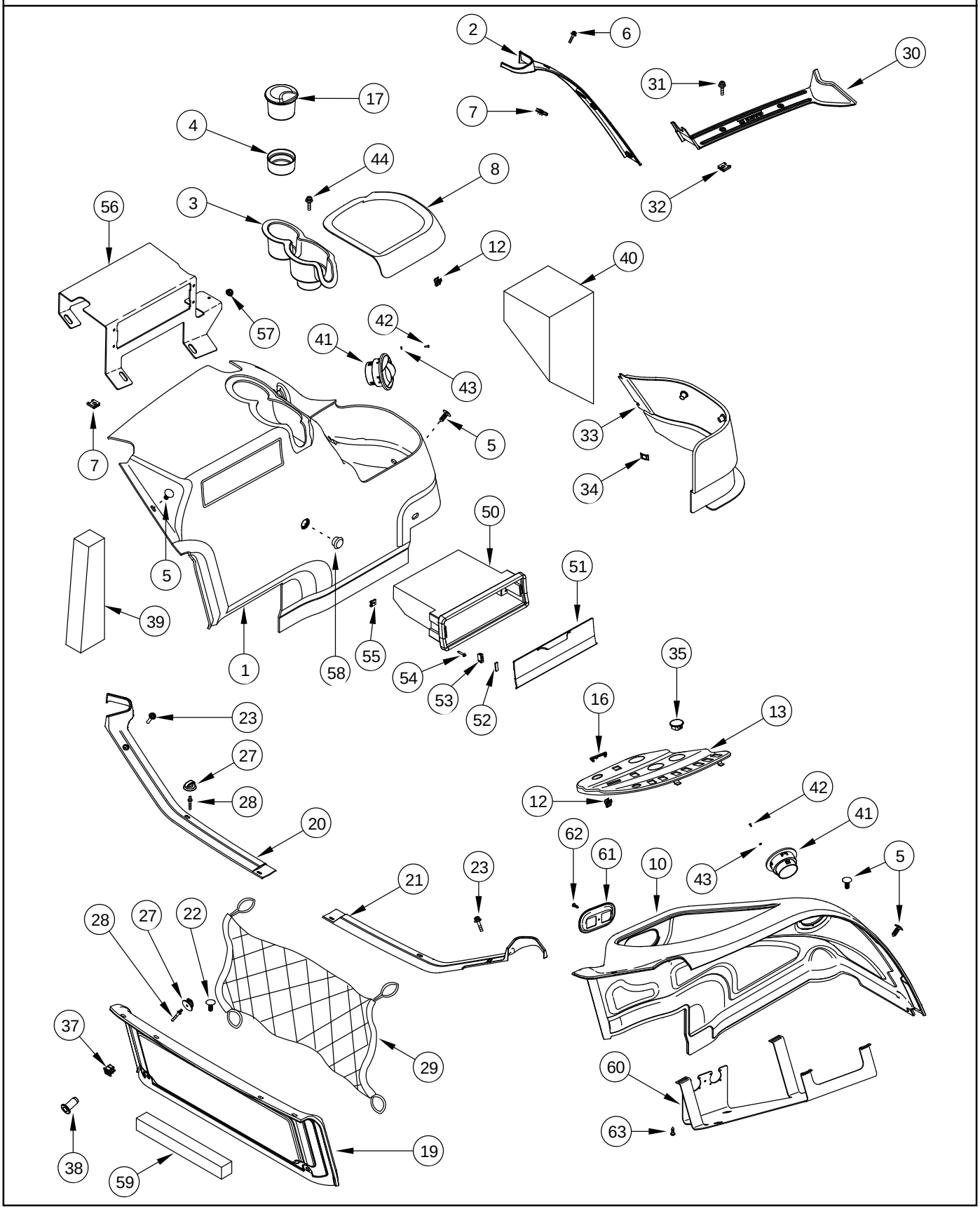

CABINA - REVESTIMIENTO, GUARDABARROS
COBERTURA DOS GUARDA-LAMAS DA CABINA
CABINE - AFWERKING, SPATBORDEN
FØRERHUS - PYNTELISTE, SKÆRME

R	N	P.N.	MOD	Q	Description Denominacion	Descrizione Denominação	Description Beschrijving	Bezeichnung Beskrivelse	L.C.
23		360362A1		2	SCREW No. 10 x 1 TORNILLO	VITE PARAFUSO	VIS SCHROEF	SCHRAUBE SKRUE	7450
27		359037A1		4	HOOK GANCHO	GANCIO GANCHO	CROCHET HAAK	HAKEN KROG	030G
28		322413A2		4	STUD PRISIONERO	PRIGIONIERO PERNE	GOUJON TAPEIND	STEHBOLZEN STOETTEBOLT	210P
29		359036A1		1	RETAINER RETENEDOR	RITEGNO RETENTOR	RETENEUR HOUDER	HALTEVORRICHTUNG HOLDER	109R
30		358807A1		1	SILL SOLERA	SOGLIA PEITORAL	SEUIL SILL	TRITTBRETT KARM	7950
31		360362A1		2	SCREW No. 10 x 1 TORNILLO	VITE PARAFUSO	VIS SCHROEF	SCHRAUBE SKRUE	7450
32		131-839		2	NUT No. 10 TUERCA	DADO PORCA	ECROU MOER	MUTTER MØTRIK	5780
33		358682A1		1	COVER TAPADERA	COPERCHIO COBERTA	COUVERCLE DEKSEL	DECKEL DÆKSEL	265C
34		333773A1		3	NUT TUERCA	DADO PORCA	ECROU MOER	MUTTER MØTRIK	010D
35	1	280628A1		1	PLUG TAPÓN	TAPPO BUJÃO	BOUCHON PLUG	STOPFEN PROP	050T
37		322072A2		2	FASTENER BOTON DE RESORTE	BOTTONE A SCATTO PARAFUSO	ATTACHE DRUKKNOP	SCHALTKNOPF UDLOESERKNAP	123B
38		322073A1		2	NUT TUERCA	DADO PORCA	ECROU MOER	MUTTER MØTRIK	010D
39		336383A1		1	PAD TACO	TASSELLO ESPACADOR	TAMPON PROP	EINSATZSTÜCK DYVEL	060T
40		336385A1		1	PAD TACO	TASSELLO ESPACADOR	TAMPON PROP	EINSATZSTÜCK DYVEL	060T
41		360365A1	a	2	DIFFUSER DIFUSOR	DIFFUSORE DIFUSOR	DIFFUSEUR VERSTUIVER	DIFFUSER SPREDEDYSE	045D
41		360365A1	b	1	DIFFUSER DIFUSOR	DIFFUSORE DIFUSOR	DIFFUSEUR VERSTUIVER	DIFFUSER SPREDEDYSE	045D
42		151-535		8	RIVET Pop, 1/8 x 15/32 inch REMACHE	RIBATTINO REBITE	RIVET KLINKNAGEL	NIET NITTE	7220
43		895-11003		8	WASHER 3,2 x 7 x 0,5 mm ARANDELA	ROSETTA PIANA ANILHA	RONDELLE SLUITRING	SCHEIBE FLADSKIVE	9720
44		104033C2		1	SCREW No. 10 x 3/4 TORNILLO	VITE PARAFUSO	VIS SCHROEF	SCHRAUBE SKRUE	040V
50	2	355101A2		1	BOX CAJA	SCATOLA CAIXA	BOÎTIER KAST	KISTE KASSE	0960
51		355102A2		1	DOOR PUERTA	PORTA PORTA	PORTE DEUR	TUER DØR	2780
52		364279A1		2	PLATE PLACA	PIASTRA CHAPA	PLAQUE PLAAT	PLATTE PLADE	105P

(1) Without Power Mirrors
(2) With CD Player
(a) BSN JAZ132383
(b) ASN JAZ132383

09-26		p3	11/04

CAB - TRIM, FENDERS
CABINA - RIFINITURE, PARAFANGHI
CABINE - GARNITURE DES GARDE-BOUE
KABINENLEISTE, -KOTFLÜGEL

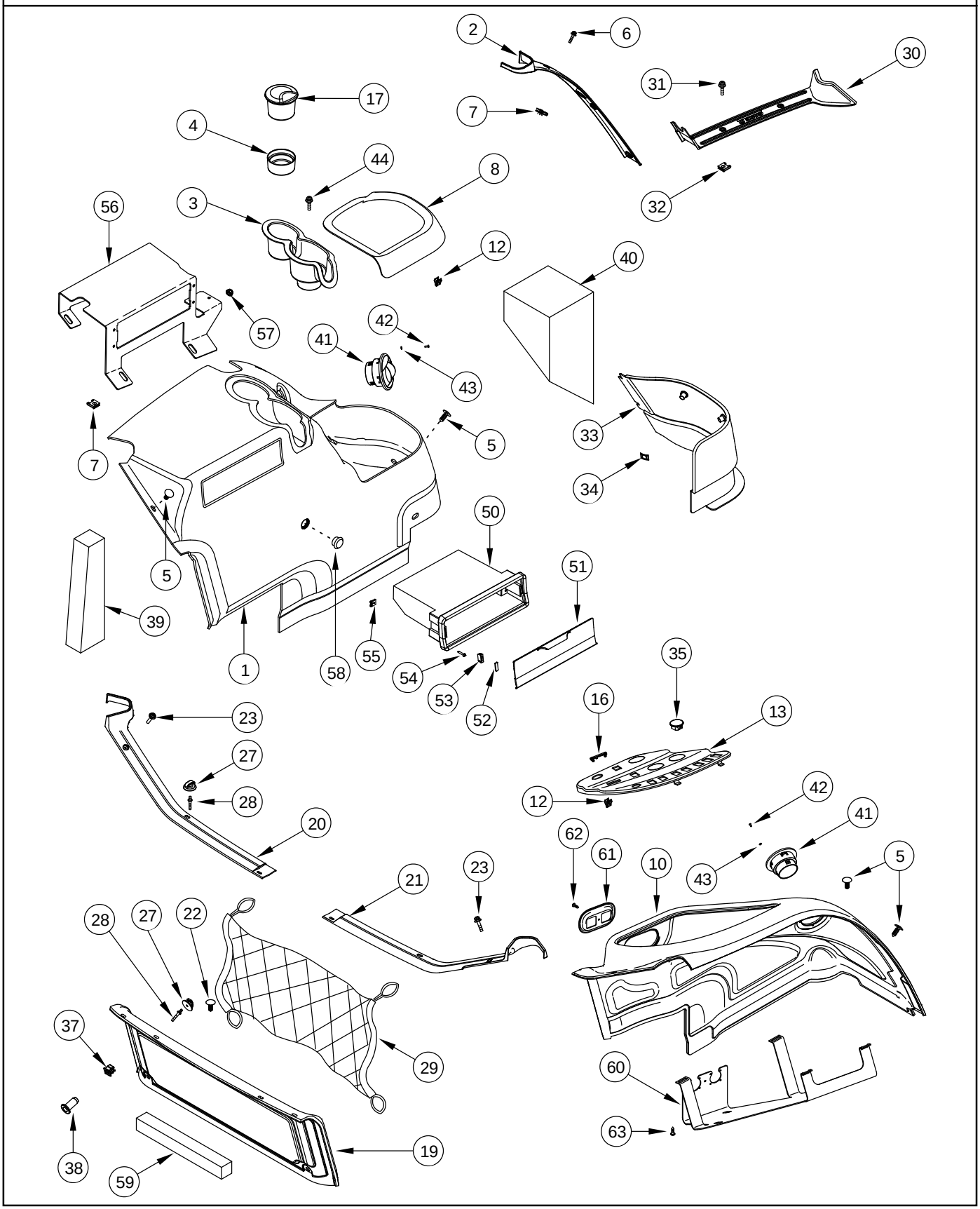

CABINA - REVESTIMIENTO, GUARDABARROS
COBERTURA DOS GUARDA-LAMAS DA CABINA
CABINE - AFWERKING, SPATBORDEN
FØRERHUS - PYNTELISTE, SKÆRME

R	N	P.N.	MOD	Q	Description Denominacion	Descrizione Denominação	Description Beschrijving	Bezeichnung Beskrivelse	L.C.
53		364281A1		2	CATCH PICAPORTE	FERMO LINGUETA	CLAVETTE DE SERRURE CATCH	VERSCHLUSS HAGE	1500
54		260-16516		4	SCREW No. 10 x 1 TORNILLO	VITE PARAFUSO	VIS SCHROEF	SCHRAUBE SKRUE	7450
55		96900C1		4	NUT No. 10 TUERCA	DADO PORCA	ECROU MOER	MUTTER MØTRIK	5780
56		86991719		1	BRACKET PIEZA DE SOPORTE	STAFFA BRACADEIRA	PATTE FIXATION STEUNBEUGEL	HALTERUNG BESLAG	225S
57		825-2408		7	NUT M8 TUERCA	DADO PORCA	ECROU MOER	MUTTER MØTRIK	5780
58		353-411		1	PLUG 1 in dia TAPÓN	TAPPO BUJAO	BOUCHON PLUG	STOPFEN PROP	6400
59		86984858		1	FOAM ESPUMA	GOMMA PIUMA ESPUMA	MOUSSE FOAM	SCHAUM FOAM	P033
60		405011A3		1	BRACKET PIEZA DE SOPORTE	STAFFA BRACADEIRA	PATTE FIXATION STEUNBEUGEL	HALTERUNG BESLAG	225S
61		428192A2		1	BEZEL MARCO	MOSTRINA CHAPA DE ORNAMENTO	ENCADREMENT SIERPLAAT	ZIERRING ORNAMENTERING	123M
62		760-17113		8	SCREW M3,5 x 13 TORNILLO	VITE PARAFUSO	VIS SCHROEF	SCHRAUBE SKRUE	040V
63		760-17316		1	SCREW M4,2 x 16 TORNILLO	VITE PARAFUSO	VIS SCHROEF	SCHRAUBE SKRUE	7450

09-27		p1	11/04

CAB - TRIM, CAB POSTS
CABINA - RIFINITURE, MONTANTI
CABINE - GARNITURE DU MONTANT DE LA CABINE
KABINENLEISTE, -RAHMEN

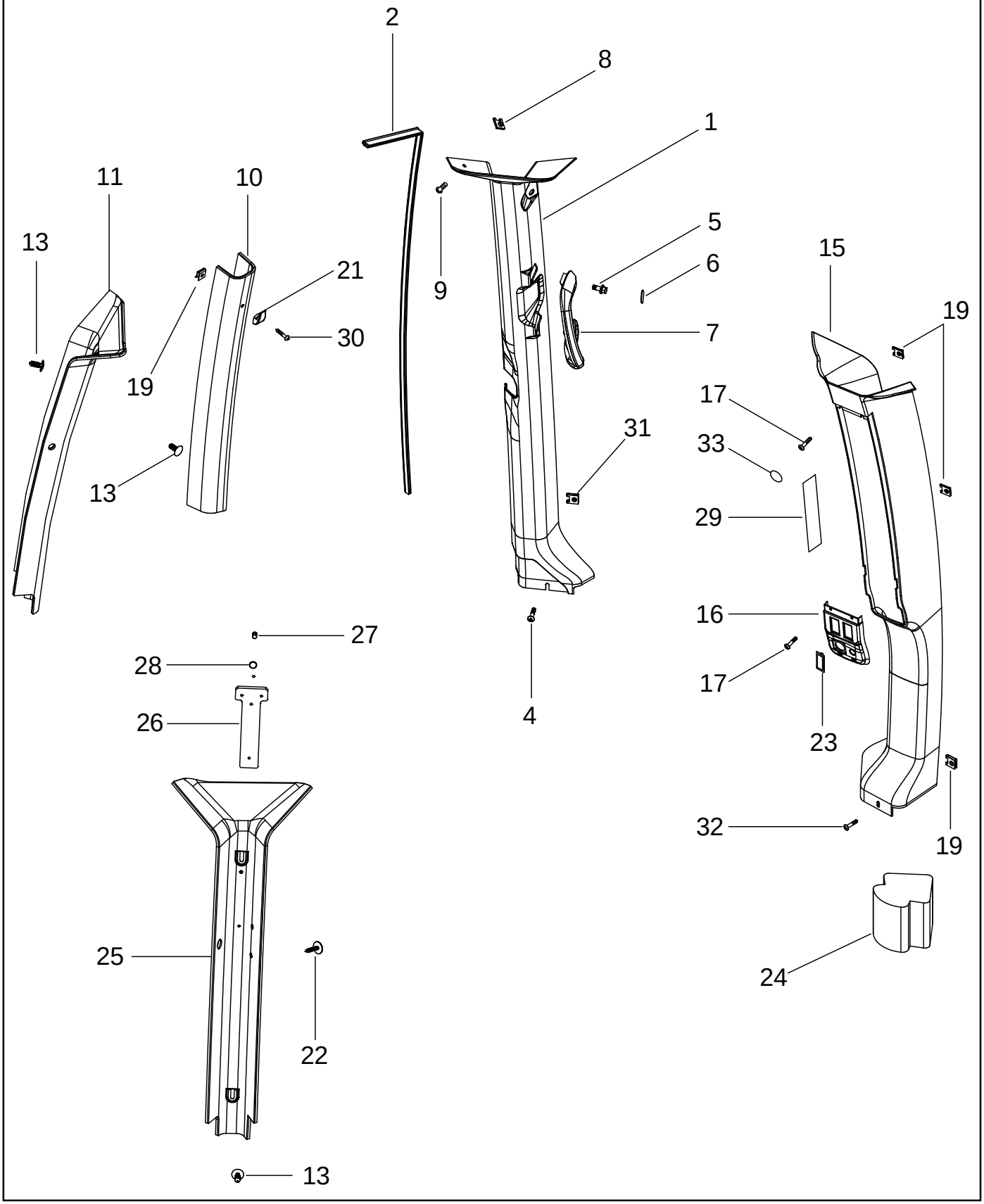

CABINA - REVESTIMIENTO, POSTES DE LA CABINA
COBERTURA DOS POSTES DA CABINA
CABINE - AFWERKING, CABINESTIJLEN
FØRERHUS - PYNTELISTE, FØRERHUSSTOLPER

R	N	P.N.	MOD	Q	Description Denominacion	Descrizione Denominação	Description Beschrijving	Bezeichnung Beskrivelse	L.C.
1		358802A1		1	COVER Left Hand, Front TAPADERA	COPERCHIO COBERTA	COUVERCLE DEKSEL	DECKEL DÆKSEL	265C
2		378041A3		1	STRIP Upper CINTA	STRISCIA CINTA	RUBAN STRIP	STREIFEN STRIP	8660
4		104033C2		1	SCREW No. 10 x 3/4 TORNILLO	VITE PARAFUSO	VIS SCHROEF	SCHRAUBE SKRUE	040V
5		781-24613		2	SCREW M6 x 13 TORNILLO	VITE PARAFUSO	VIS SCHROEF	SCHRAUBE SKRUE	7450
6		359035A1		1	PLUG TAPÓN	TAPPO BUJAO	BOUCHON PLUG	STOPFEN PROP	6400
7		359034A1		1	HANDLE MANECILLA	MANIGLIA MANIPULO	POIGNÉE HENDEL	HANDGRIFF HAANDTAG	4120
8		131-839		1	NUT No. 10 TUERCA	DADO PORCA	ECROU MOER	MUTTER MØTRIK	5780
9		360362A1		1	SCREW No. 10 x 1 TORNILLO	VITE PARAFUSO	VIS SCHROEF	SCHRAUBE SKRUE	7450
10		355100A1		1	COVER Left Hand Middle TAPA	COPERCHIO TAMPA	COUVERCLE COVER	DECKEL COVER	2250
11		355099A1		1	TRIM PANEL Left Hand, Rear TAPICERIA	TAPPEZZERIA TAPECARIA	PANNEAU-TAPISSERIE AANPASBARE PANELEN	ARMATURENVERKLEIDU TRIM PANEL	032T
13		93199C1		5	FASTENER BOTON DE RESORTE	BOTTONE A SCATTO PARAFUSO	ATTACHE DRUKKNOP	SCHALTKNOPF UDLOESERKNAP	123B
15		444547A1		1	TRIM PANEL Right Hand, Front TAPICERIA	TAPPEZZERIA TAPECARIA	PANNEAU-TAPISSERIE AANPASBARE PANELEN	ARMATURENVERKLEIDU TRIM PANEL	032T
16		358804A1		1	BEZEL MARCO	MOSTRINA CHAPA DE ORNAMENTC	ENCADREMENT SIERPLAAT	DECKRING ORNAMENTERING	0680
17		260-16516		7	SCREW No. 10 x 1 TORNILLO	VITE PARAFUSO	VIS SCHROEF	SCHRAUBE SKRUE	7450
19		177269A1		9	NUT TUERCA	DADO PORCA	ECROU MOER	MUTTER MØTRIK	010D
21		3234176R1		1	COAT HOOK PERCHA	GANCIO CABIDE	PORTE-MANTEAU COAT HOOK	KLEIDERHAKEN COAT HOOK	Z600
22		333772A1		2	PLUG TAPÓN	TAPPO BUJÃO	BOUCHON PLUG	STOPFEN PROP	050T
23		245918C1		2	CAP TAPON DEL DEPOSITO	TAPPO SERBATOIO TAMPAO DE RESERVAT	CHAPEAU RESERVOIRDOP	KAPPE TANKDAEKSEL	052T
24		336384A1		1	PAD TACO	TASSELLO ESPACADOR	TAMPON PROP	EINSATZSTÜCK DYVEL	060T
25		358667A1		1	COVER Right Hand, Rear, Inc. 26 - 28 TAPADERA	COPERCHIO COBERTA	COUVERCLE DEKSEL	DECKEL DÆKSEL	265C
26		305688A1		1	TOOL HERRAMIENTA	UTENSILE FERRAMENTA	OUTIL TOOL	WERKZEUG VÆRKTØJ	9120
27		151-537		2	RIVET Pop, 1/8 x 5/8 REMACHE	RIBATTINO REBITE	RIVET KLINKNAGEL	NIET NITTE	7220
28		895-11003		2	WASHER 3,2 x 7 x 0,5 mm ARANDELA	ROSETTA PIANA ANILHA	RONDELLE SLUITRING	SCHEIBE FLADSKIVE	9720

09-27		p2	11/04

CAB - TRIM, CAB POSTS
CABINA - RIFINITURE, MONTANTI
CABINE - GARNITURE DU MONTANT DE LA CABINE
KABINENLEISTE, -RAHMEN

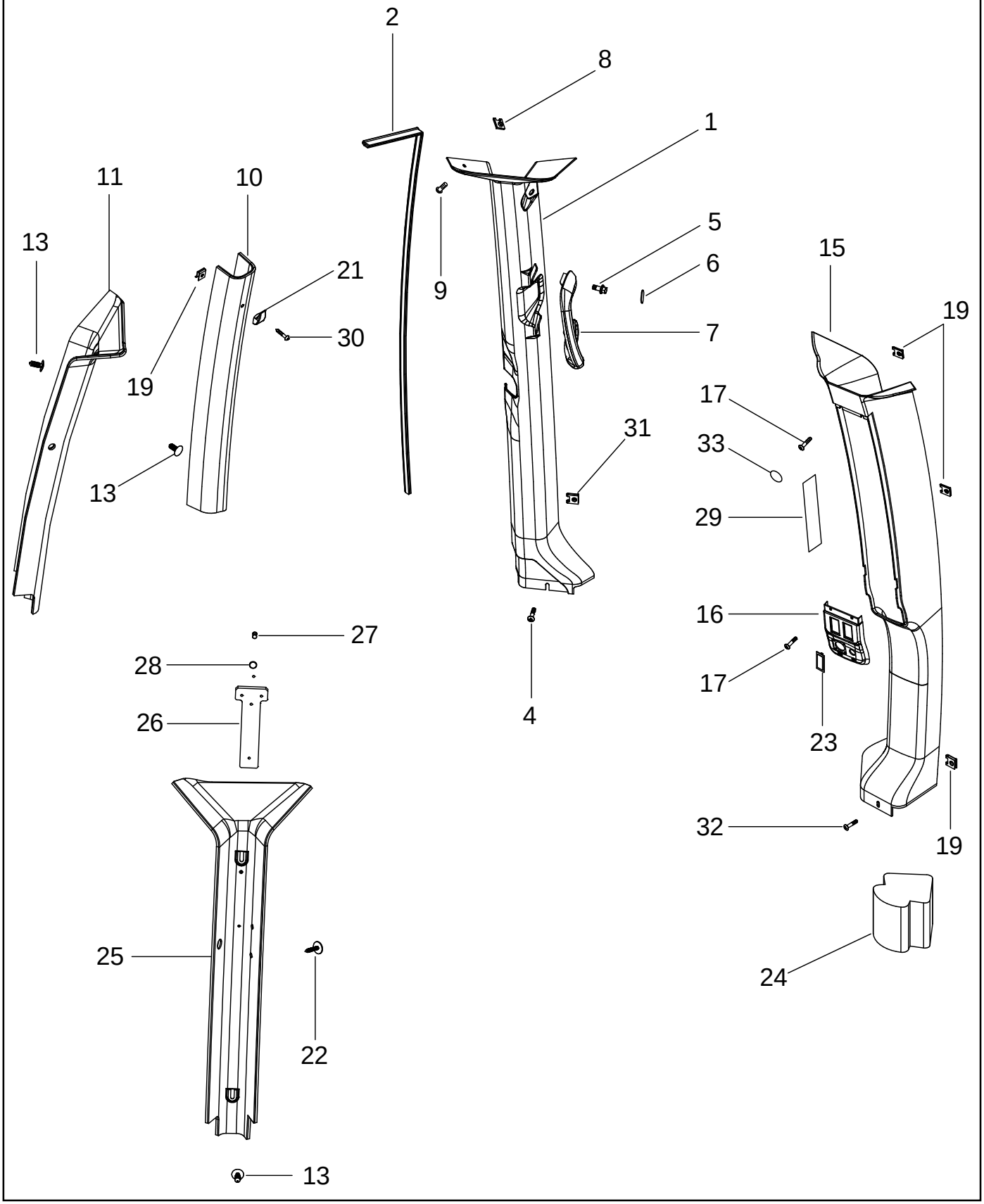

CABINA - REVESTIMIENTO, POSTES DE LA CABINA
COBERTURA DOS POSTES DA CABINA
CABINE - AFWERKING, CABINESTIJLEN
FØRERHUS - PYNTELISTE, FØRERHUSSTOLPER

R	N	P.N.	MOD	Q	Description Denominacion	Descrizione Denominação	Description Beschrijving	Bezeichnung Beskrivelse	L.C.
29		360322A1		2	TAPE, ADHESIVE 305 mm, Cut From 1987208C2				
						NASTRO	RUBAN ADHESIF	KLEBEBAND	8960
					CINTA	CINTA	TAPE	TAPE	
30		761-17325		1	SCREW M4,2 x 25	VITE	VIS	SCHRAUBE	7450
					TORNILLO	PARAFUSO	SCHROEF	SKRUE	
31		131-832		1	NUT No. 10	DADO	ECROU	MUTTER	5780
					TUERCA	PORCA	MOER	MØTRIK	
32		1975782C1		1	SCREW	VITE	VIS	SCHRAUBE	040V
					TORNILLO	PARAFUSO	SCHROEF	SKRUE	
33		376597A2		2	COVER	COPERCHIO	COUVERCLE	DECKEL	265C
					TAPADERA	COBERTA	DEKSEL	DÆKSEL	

09-28		p1	11/04

CAB - INSTRUMENT PANEL
CABINA - QUADRO STRUMENTI
CABINE - TABLEAU DE BORD
KABINEN-ARMATURENBRETT

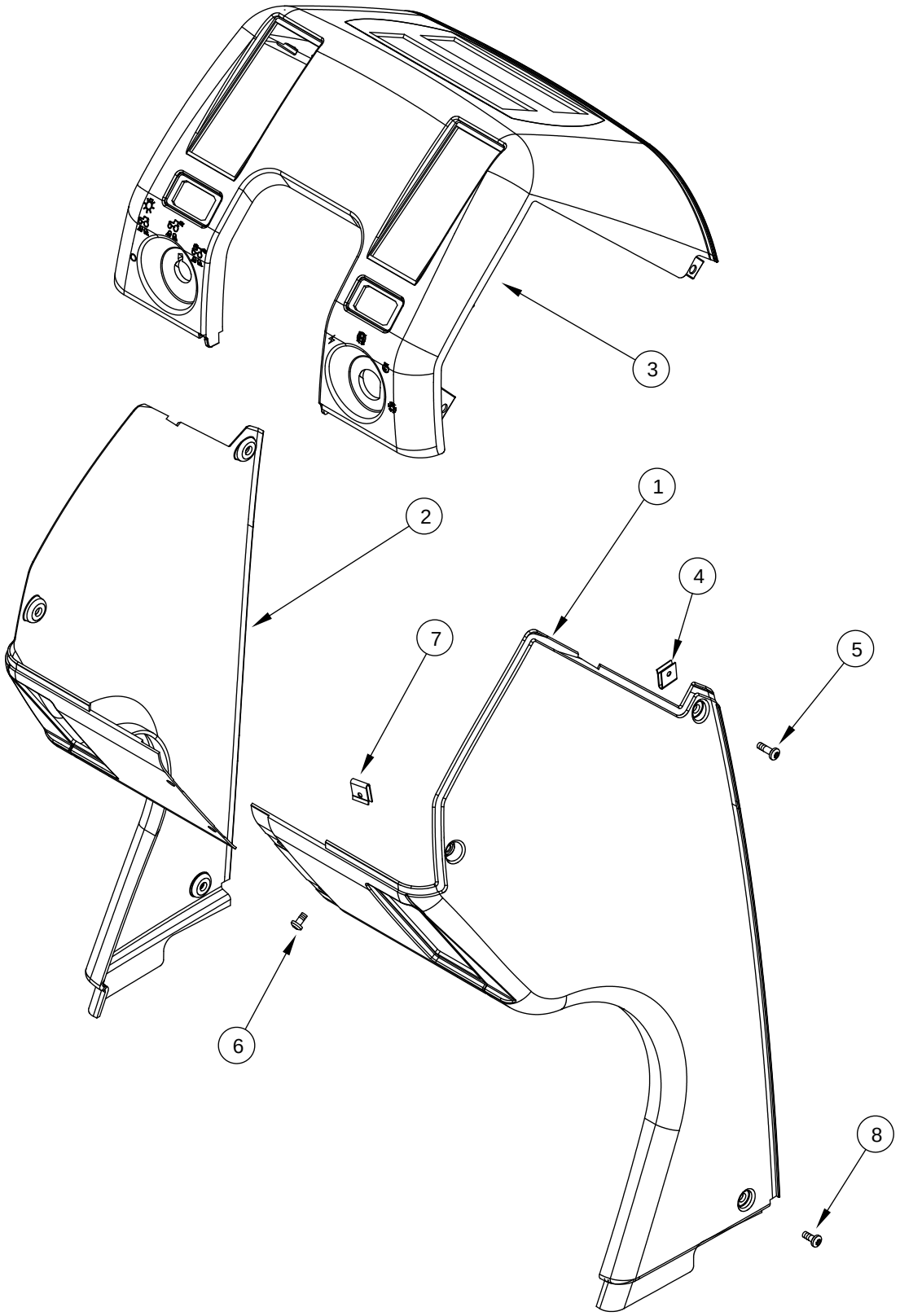

CABINA - PANEL DE INSTRUMENTOS
PAINEL DE INSTRUMENTOS DA CABINA
CABINE - INSTRUMENTENPANEEL
FØRERHUS - INSTRUMENTPANEL

R	N	P.N.	MOD	Q	Description Denominacion	Descrizione Denominação	Description Beschrijving	Bezeichnung Beskrivelse	L.C.
1		358671A1		1	COVER Right Hand TAPA	COPERCHIO TAMPA	COUVERCLE COVER	DECKEL COVER	2250
2		358670A1		1	COVER Left Hand TAPA	COPERCHIO TAMPA	COUVERCLE COVER	DECKEL COVER	2250
3		358672A1		1	COVER Top TAPA	COPERCHIO TAMPA	COUVERCLE COVER	DECKEL COVER	2250
4		131-839		4	NUT No. 10 TUERCA	DADO PORCA	ECROU MOER	MUTTER MØTRIK	5780
5		360362A1		4	SCREW No. 10 x 1 TORNILLO	VITE PARAFUSO	VIS SCHROEF	SCHRAUBE SKRUE	7450
6		360363A1		2	SCREW TORNILLO	VITE PARAFUSO	VIS SCHROEF	SCHRAUBE SKRUE	7450
7		131-832		2	NUT No. 10 TUERCA	DADO PORCA	ECROU MOER	MUTTER MØTRIK	5780
8		362394A1		2	SCREW TORNILLO	VITE PARAFUSO	VIS SCHROEF	SCHRAUBE SKRUE	7450

09-29		p1	11/04

SEAT ASSEMBLY
GRUPPO DEL SEDILE
SIÈGE
SITZ

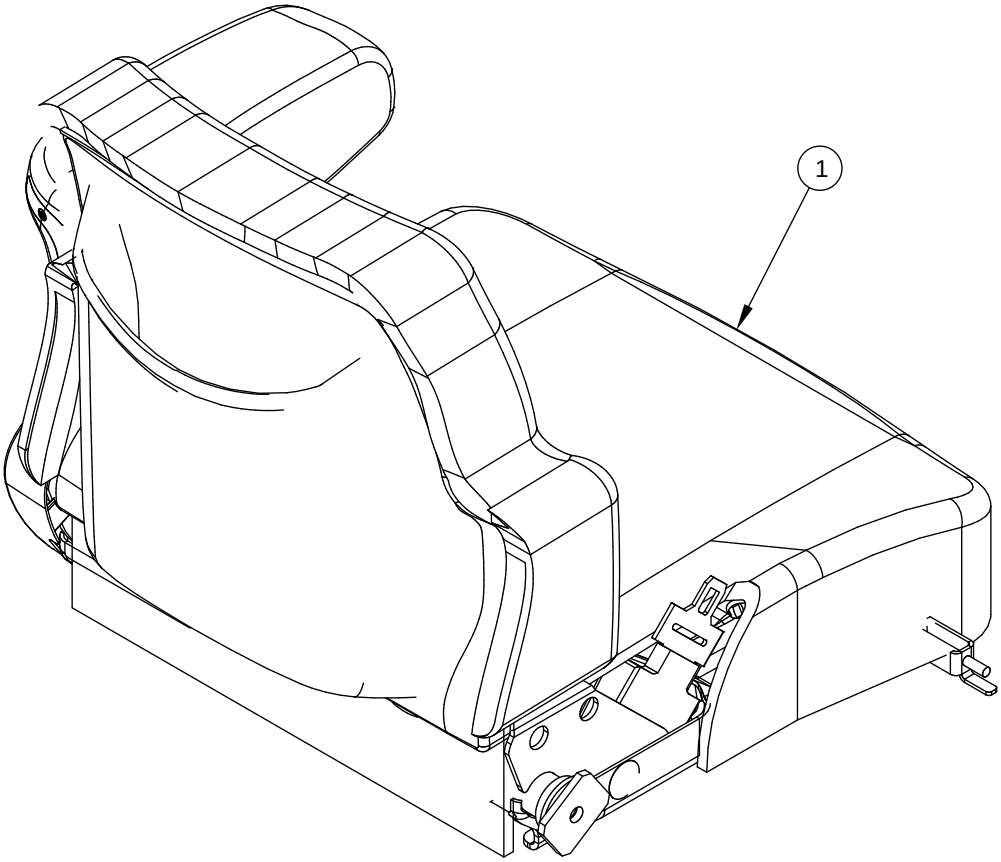

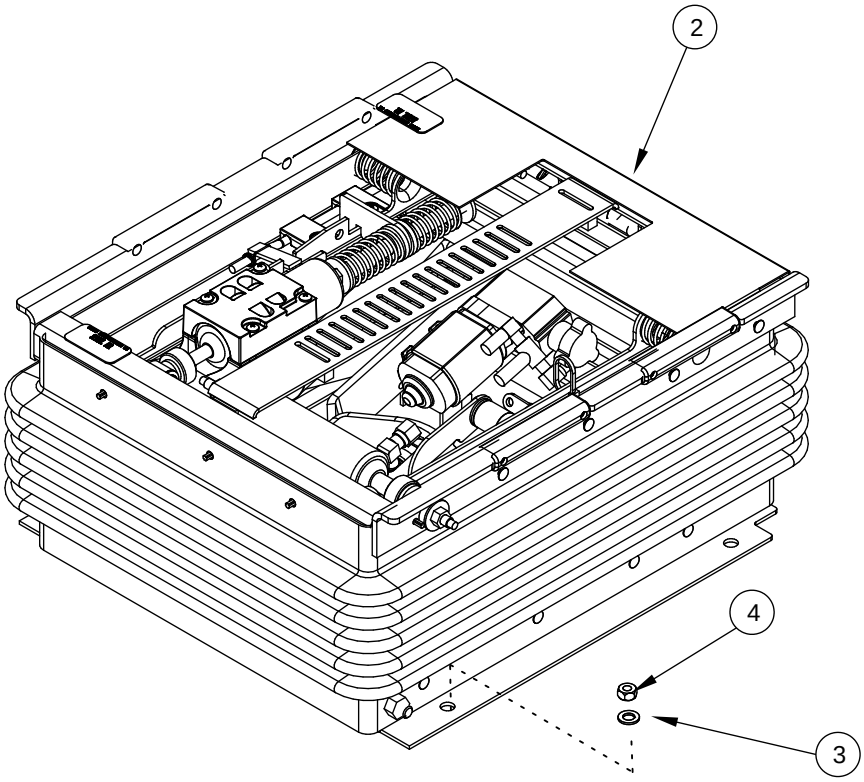

CONJUNTO DEL ASIENTO
CONJUNTO DO ASSENTO
STOEL
SÆDESAMLING

R	N	P.N.	MOD	Q	Description Denominacion	Descrizione Denominação	Description Beschrijving	Bezeichnung Beskrivelse	L.C.
		358204A3		1	SEAT ASSY. Cloth Without Heat And Active Suspension, Inc. 1, 2				
						SEDILE, COMPLESSIVO	SIEGE (ASSEMBLE)	SITZ (KPLT.)	P573
					ASIENTO (CONJUNTO)	ASSENTO CONJUNTO	SEAT ASSY.	SEAT ASSY.	
		397520A3		1	SEAT ASSY. Cloth With Heat Without Active Suspension, Inc. 1, 2				
						SEDILE, COMPLESSIVO	SIEGE (ASSEMBLE)	SITZ (KPLT.)	P573
					ASIENTO (CONJUNTO)	ASSENTO CONJUNTO	SEAT ASSY.	SEAT ASSY.	
		403214A1		1	SEAT ASSY. Cloth With Heat And Active Suspension, Inc. 1, 2				
						SEDILE, COMPLESSIVO	SIEGE (ASSEMBLE)	SITZ (KPLT.)	P573
					ASIENTO (CONJUNTO)	ASSENTO CONJUNTO	SEAT ASSY.	SEAT ASSY.	
		400164A1		1	SEAT ASSY. Leather With Heat and Active Suspension, Inc. 1, 2				
						SEDILE, COMPLESSIVO	SIEGE (ASSEMBLE)	SITZ (KPLT.)	P573
					ASIENTO (CONJUNTO)	ASSENTO CONJUNTO	SEAT ASSY.	SEAT ASSY.	
1	1	**360324A2**		1	SEAT ASSY. Cloth, Without Heat				
						SEDILE, COMPLESSIVO	SIEGE (ASSEMBLE)	SITZ (KPLT.)	P573
					ASIENTO (CONJUNTO)	ASSENTO CONJUNTO	SEAT ASSY.	SEAT ASSY.	
1	1	**397526A1**		1	SEAT ASSY. Cloth, With Heat				
						SEDILE, COMPLESSIVO	SIEGE (ASSEMBLE)	SITZ (KPLT.)	P573
					ASIENTO (CONJUNTO)	ASSENTO CONJUNTO	SEAT ASSY.	SEAT ASSY.	
1	1	**400181A1**		1	CUSHION ASSY. Leather, With Heat				
						GRUPPO CUSCINO	COUSSIN (ASSEMBLE)	KISSEN (KPLT.)	P601
					COJIN (CONJUNTO)	COXIM CONJUNTO	CUSHION ASSY.	CUSHION ASSY.	
2	2	**374353A2**		1	PACKAGE,SERVICE Suspension, Without Active Suspension				
						CONFEZIONE, MANUT.	COLIS POUR RECHANGI	ERSATZPACKUNG	P663
					EMPAQUETADURA	JOGO DE SERVICO(PAC	PACKAGE,SERVICE	PACKAGE,SERVICE	
2	3	**400184A1**		1	KIT Suspension, With Active Suspension				
						CORREDO	KIT	SATZ	305C
					EQUIPO	KIT	KIT	UDSTYR	
4		**825-2408**		4	NUT M8	DADO	ECROU	MUTTER	5780
					TUERCA	PORCA	MOER	MØTRIK	

(1) See Figure 09-30
(2) See Figure 09-31
(3) See Figure 09-32

09-30		p1	11/04

CUSHION ASSEMBLY - SEAT
GRUPPO DEL CUSCINO - SEDILE
SIÈGE - COUSSIN
SITZKISSEN

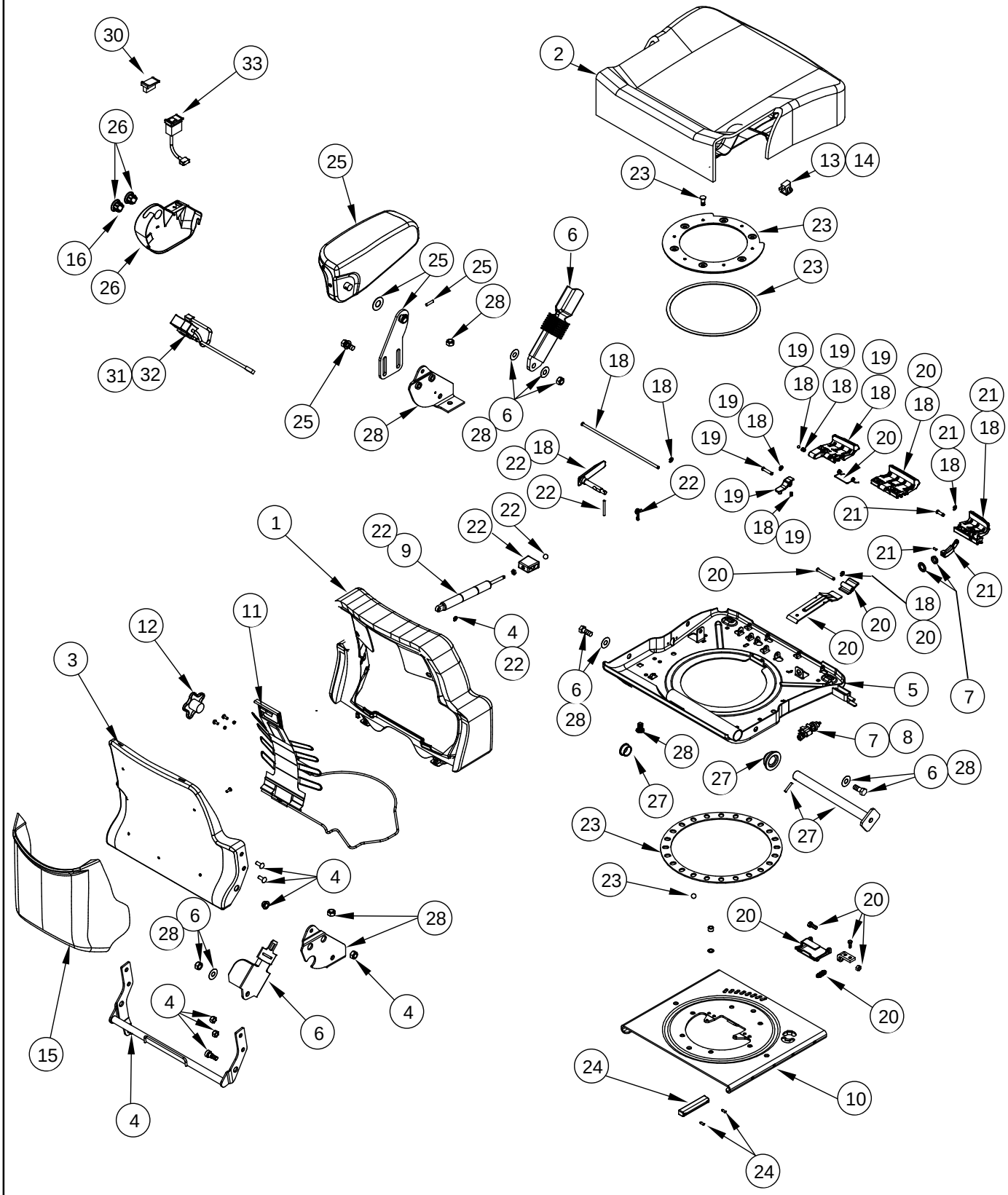

CONJUNTO DE COJÍN - ASIENTO
CONJUNTO DA ALMOFADA DO ASSENTO
KUSSENS - STOEL
PUDESAMLING - SÆDE

R	N	P.N.	MOD	Q	Description Denominacion	Descrizione Denominação	Description Beschrijving	Bezeichnung Beskrivelse	L.C.
		360319A2		1	CUSHION ASSY. Cloth Without Heat, Inc. 1 - 30				
						GRUPPO CUSCINO	COUSSIN (ASSEMBLE)	KISSEN (KPLT.)	P601
					COJIN (CONJUNTO)	COXIM CONJUNTO	CUSHION ASSY.	CUSHION ASSY.	
		397525A1		1	CUSHION ASSY. Cloth With Heat, Inc. 1 - 33				
						GRUPPO CUSCINO	COUSSIN (ASSEMBLE)	KISSEN (KPLT.)	P601
					COJIN (CONJUNTO)	COXIM CONJUNTO	CUSHION ASSY.	CUSHION ASSY.	
		400179A1		1	CUSHION ASSY. Leather With Heat, Inc. 1 - 33				
						GRUPPO CUSCINO	COUSSIN (ASSEMBLE)	KISSEN (KPLT.)	P601
					COJIN (CONJUNTO)	COXIM CONJUNTO	CUSHION ASSY.	CUSHION ASSY.	
1		360329A1		1	BACKREST Cloth Without Heat				
						SCHIENALE	DOSSIER	RÜCKENLEHNE	P006
					RESPALDO	RESPALDO	BACKREST	RYGSTØTTE	
1		87407044		1	BACKREST Cloth With Heat				
						SCHIENALE	DOSSIER	RÜCKENLEHNE	P006
					RESPALDO	RESPALDO	BACKREST	RYGSTØTTE	
1		87407042		1	BACKREST Leather With Heat				
						SCHIENALE	DOSSIER	RÜCKENLEHNE	P006
					RESPALDO	RESPALDO	BACKREST	RYGSTØTTE	
2		360328A2		1	CUSHION ASSY. Cloth Without Heat				
						GRUPPO CUSCINO	COUSSIN (ASSEMBLE)	KISSEN (KPLT.)	P601
					COJIN (CONJUNTO)	COXIM CONJUNTO	CUSHION ASSY.	CUSHION ASSY.	
2		87407045		1	CUSHION ASSY. Cloth With Heat				
						GRUPPO CUSCINO	COUSSIN (ASSEMBLE)	KISSEN (KPLT.)	P601
					COJIN (CONJUNTO)	COXIM CONJUNTO	CUSHION ASSY.	CUSHION ASSY.	
2		87407043		1	CUSHION ASSY. Leather With Heat				
						GRUPPO CUSCINO	COUSSIN (ASSEMBLE)	KISSEN (KPLT.)	P601
					COJIN (CONJUNTO)	COXIM CONJUNTO	CUSHION ASSY.	CUSHION ASSY.	
3		302005A1		1	PANEL Backrest, Cloth	PANNELLO	PANNEAU	TAFEL	025P
					CONTRAPANEL	PAINEL	PANEELWERK	PANEL	
3		375198A1		1	BACKREST Backrest, Leather				
						SCHIENALE	DOSSIER	RÜCKENLEHNE	P006
					RESPALDO	RESPALDO	BACKREST	RYGSTØTTE	
4		359959A1		1	TUBE Torque Tube	TUBETTO	TUBE	SCHLAUCH	195T
					TUBO	TUBO	BUISJE	RØR	
5		375225A1		1	PAN Seat	VASCHETTA	CUVETTE	PFANNE	019V
					CUBETA	CARTER	CARTER	KAR	
7		1981852C3		1	SWITCH Air Control, Inc. 8	INTERRUTTORE	CONTACTEUR	SCHALTER	075I
					CONTACTOR	INTERRUPTOR	SCHAKELAAR	KONTAKT	
8		1987186C2		1	KNOB	POMELLO	POMMEAU	KNOPF	150P
					POMO	BOTAO	KNOP	KNAP	
9		302004A2		1	SHOCK ABSORBER Gas Strut				
						AMMORTIZZATORE	AMORTISSEUR	STOSSDÄMPFER	036A
					AMORTIGUADOR	AMORTECEDOR	SCHOKDEMPER	STOEDDAEMPER	
10		302001A1		1	PLATE Swivel	PIASTRA	PLAQUE	PLATTE	105P
					PLACA	CHAPA	PLAAT	PLADE	
11		333104A2		1	SUPPORT Lumbar, Inc. 12	SUPPORTO	SUPPORT	STUETZE	8790
					APOYADERO	SUPORTE	SUPPORT	SUPPORT	

09-30		p2	11/04

CUSHION ASSEMBLY - SEAT
GRUPPO DEL CUSCINO - SEDILE
SIÈGE - COUSSIN
SITZKISSEN

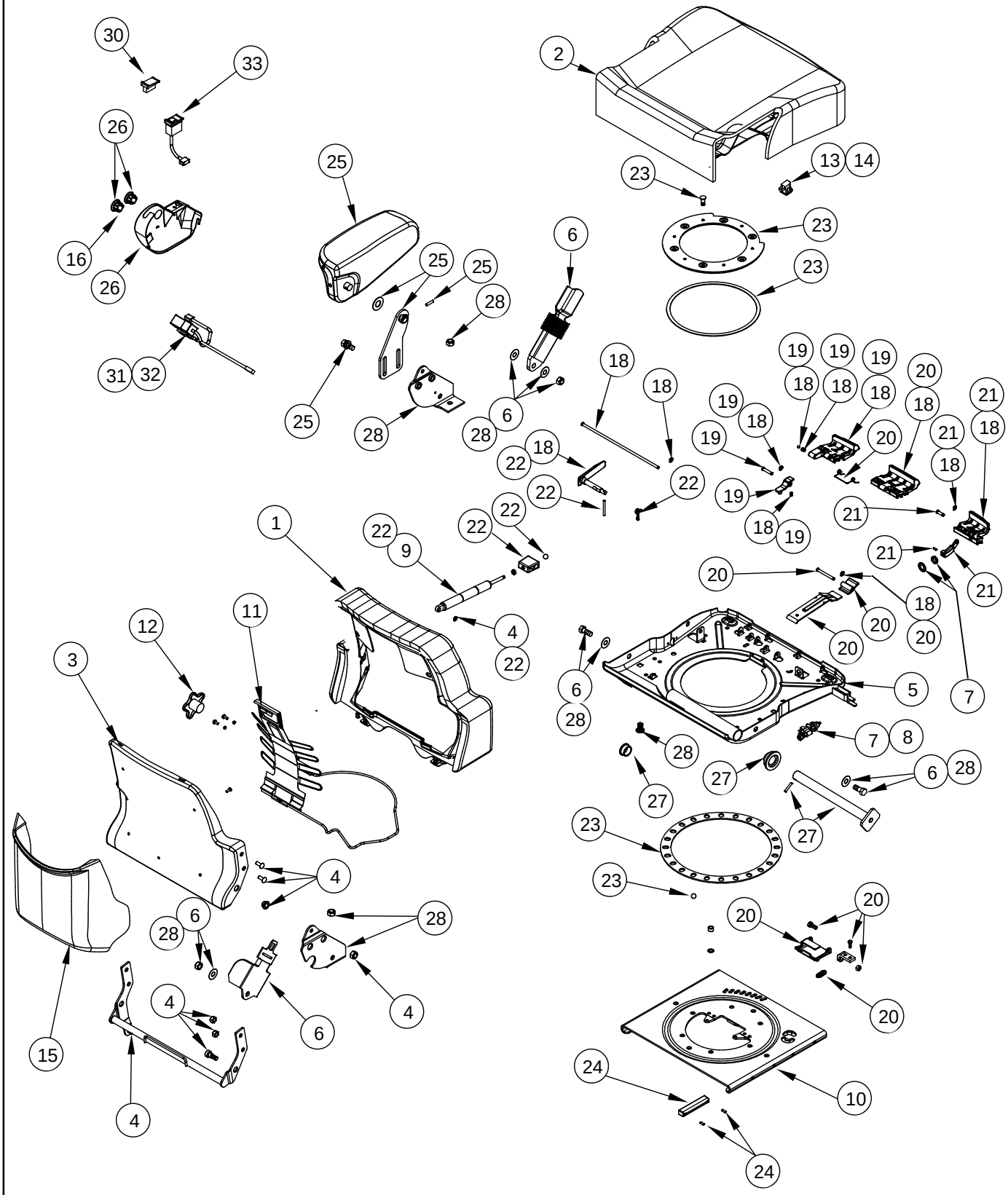

CONJUNTO DE COJÍN - ASIENTO
CONJUNTO DA ALMOFADA DO ASSENTO
KUSSENS - STOEL
PUDESAMLING - SÆDE

R	N	P.N.	MOD	Q	Description Denominacion	Descrizione Denominação	Description Beschrijving	Bezeichnung Beskrivelse	L.C.
12		374387A1		1	PACKAGE,SERVICE Lumbar				
						CONFEZIONE, MANUT.	COLIS POUR RECHANGI	ERSATZPACKUNG	P663
					EMPAQUETADURA	JOGO DE SERVICO(PAC	PACKAGE,SERVICE	PACKAGE,SERVICE	
13		333107A1		1	SWITCH Operators Presence				
						INTERRUTTORE	CONTACTEUR	SCHALTER	075I
					CONTACTOR	INTERRUPTOR	SCHAKELAAR	KONTAKT	
14		302011A1		1	HARNESS Operator Presence, Without Heat				
						CABLAGGIO	FAISCEAU	KABELSTRANG	4160
					HAZ	CHICOTE	HARNESS	HARNESS	
14		87407046		1	HARNESS Operator Presence, With Heat				
						CABLAGGIO	FAISCEAU	KABELSTRANG	4160
					HAZ	CHICOTE	HARNESS	HARNESS	
15		333108A2		1	CASE Operators Manual, Cloth				
						ASTUCCIO	CARTER-BOITE	KOFFER	101A
					ESTUCHE	ESTOJO	HULS	HUS	
15		374388A1		1	PACKAGE,SERVICE Operators Manual, Leather				
						CONFEZIONE, MANUT.	COLIS POUR RECHANGI	ERSATZPACKUNG	P663
					EMPAQUETADURA	JOGO DE SERVICO(PAC	PACKAGE,SERVICE	PACKAGE,SERVICE	
16		374361A1		1	BLANK-OFF PLUG	OTTURATORE	OBTURATEUR	VERSCHLUSSTOPFEN	Z572
					OBTURADOR	OBTURADOR	SPOEL	BLINDPROP	
18		373463A1		1	PACKAGE,SERVICE Seat Knob				
						CONFEZIONE, MANUT.	COLIS POUR RECHANGI	ERSATZPACKUNG	P663
					EMPAQUETADURA	JOGO DE SERVICO(PAC	PACKAGE,SERVICE	PACKAGE,SERVICE	
19		373464A1		1	PACKAGE,SERVICE Swivel Control				
						CONFEZIONE, MANUT.	COLIS POUR RECHANGI	ERSATZPACKUNG	P663
					EMPAQUETADURA	JOGO DE SERVICO(PAC	PACKAGE,SERVICE	PACKAGE,SERVICE	
20		373465A1		1	PACKAGE,SERVICE Slide Control				
						CONFEZIONE, MANUT.	COLIS POUR RECHANGI	ERSATZPACKUNG	P663
					EMPAQUETADURA	JOGO DE SERVICO(PAC	PACKAGE,SERVICE	PACKAGE,SERVICE	
21		373466A1		1	PACKAGE,SERVICE Height Control				
						CONFEZIONE, MANUT.	COLIS POUR RECHANGI	ERSATZPACKUNG	P663
					EMPAQUETADURA	JOGO DE SERVICO(PAC	PACKAGE,SERVICE	PACKAGE,SERVICE	
22		373467A2		1	PACKAGE,SERVICE Recliner Control				
						CONFEZIONE, MANUT.	COLIS POUR RECHANGI	ERSATZPACKUNG	P663
					EMPAQUETADURA	JOGO DE SERVICO(PAC	PACKAGE,SERVICE	PACKAGE,SERVICE	
23		391414A1		1	PACKAGE,SERVICE Swivel				
						CONFEZIONE, MANUT.	COLIS POUR RECHANGI	ERSATZPACKUNG	P663
					EMPAQUETADURA	JOGO DE SERVICO(PAC	PACKAGE,SERVICE	PACKAGE,SERVICE	
24		302016A1		1	PACKAGE,SERVICE Slide Pucks				
						CONFEZIONE, MANUT.	COLIS POUR RECHANGI	ERSATZPACKUNG	P663
					EMPAQUETADURA	JOGO DE SERVICO(PAC	PACKAGE,SERVICE	PACKAGE,SERVICE	
25		361044A1		1	PACKAGE,SERVICE Armrest, Left Hand, Cloth				
						CONFEZIONE, MANUT.	COLIS POUR RECHANGI	ERSATZPACKUNG	P663
					EMPAQUETADURA	JOGO DE SERVICO(PAC	PACKAGE,SERVICE	PACKAGE,SERVICE	
25		373468A1		1	PACKAGE,SERVICE Armrest, Left Hand, Leather				
						CONFEZIONE, MANUT.	COLIS POUR RECHANGI	ERSATZPACKUNG	P663
					EMPAQUETADURA	JOGO DE SERVICO(PAC	PACKAGE,SERVICE	PACKAGE,SERVICE	

09-30		p3	11/04

CUSHION ASSEMBLY - SEAT
GRUPPO DEL CUSCINO - SEDILE
SIÈGE - COUSSIN
SITZKISSEN

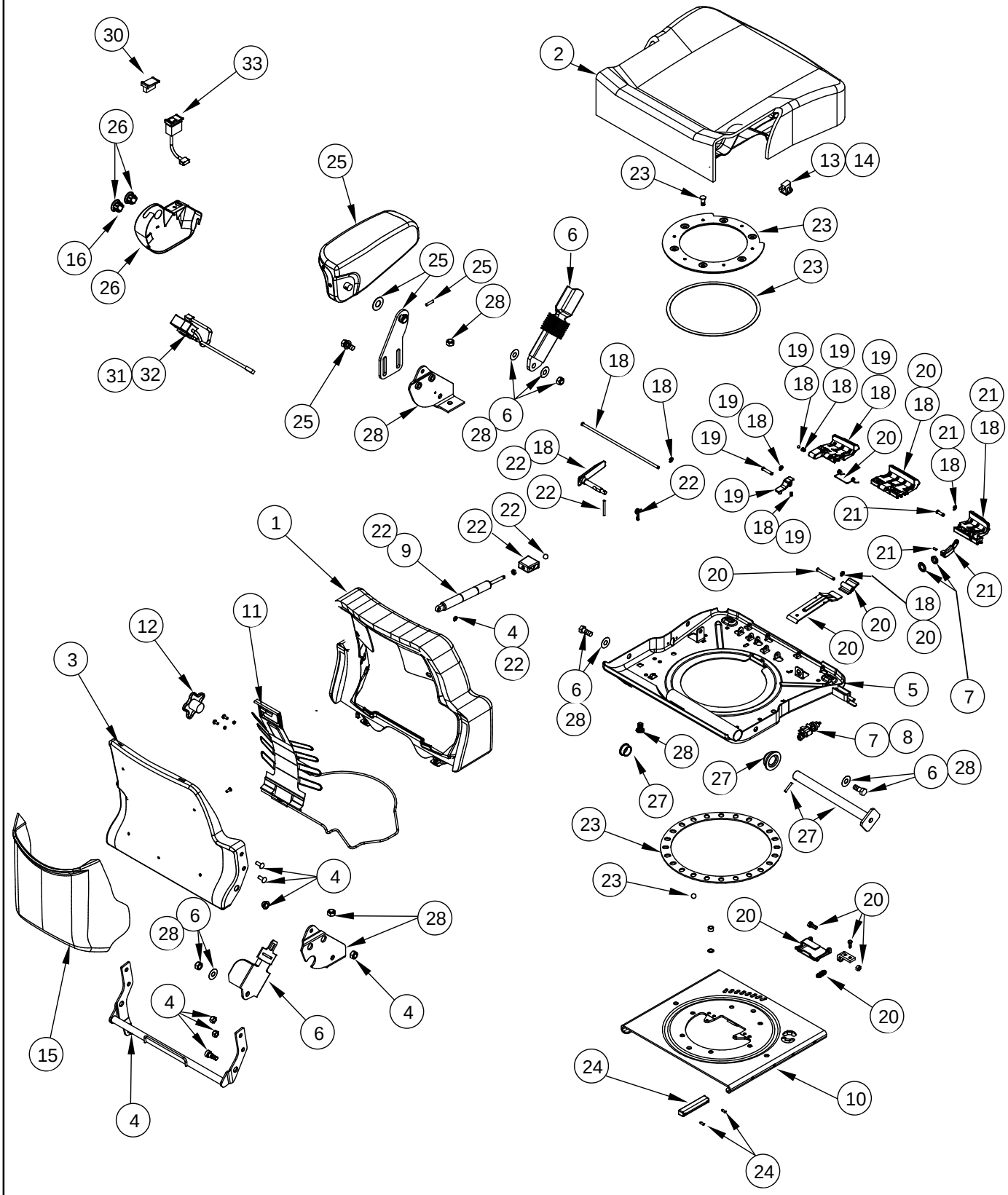

CONJUNTO DE COJÍN - ASIENTO
CONJUNTO DA ALMOFADA DO ASSENTO
KUSSENS - STOEL
PUDESAMLING - SÆDE

R	N	P.N.	MOD	Q	Description Denominacion	Descrizione Denominação	Description Beschrijving	Bezeichnung Beskrivelse	L.C.
26		374386A1		1	PACKAGE,SERVICE Heater Switch Cover				
						CONFEZIONE, MANUT.	COLIS POUR RECHANGI	ERSATZPACKUNG	P663
					EMPAQUETADURA	JOGO DE SERVICO(PAC	PACKAGE,SERVICE	PACKAGE,SERVICE	
27		359951A1		1	PACKAGE,SERVICE Console Mount				
						CONFEZIONE, MANUT.	COLIS POUR RECHANGI	ERSATZPACKUNG	P663
					EMPAQUETADURA	JOGO DE SERVICO(PAC	PACKAGE,SERVICE	PACKAGE,SERVICE	
28		359950A1		1	PACKAGE,SERVICE Side Brackets				
						CONFEZIONE, MANUT.	COLIS POUR RECHANGI	ERSATZPACKUNG	P663
					EMPAQUETADURA	JOGO DE SERVICO(PAC	PACKAGE,SERVICE	PACKAGE,SERVICE	
29		373462A2		1	PACKAGE,SERVICE Jam Nut				
						CONFEZIONE, MANUT.	COLIS POUR RECHANGI	ERSATZPACKUNG	P663
					EMPAQUETADURA	JOGO DE SERVICO(PAC	PACKAGE,SERVICE	PACKAGE,SERVICE	
30		375200A1		1	PLUG	TAPPO	BOUCHON	STOPFEN	050T
					TAPÓN	BUJÃO	PLUG	PROP	
		87407039		1	HARNESS Heater, Inc. 31	CABLAGGIO	FAISCEAU	KABELSTRANG	4160
					HAZ	CHICOTE	HARNESS	HARNESS	
31		87407048		1	SWITCH Switch	INTERRUTTORE	CONTACTEUR	SCHALTER	075I
					CONTACTOR	INTERRUPTOR	SCHAKELAAR	KONTAKT	

09-31		p1	11/04

SUSPENSION ASSEMBLY - SEAT
GRUPPO DELLE SOSPENSIONI - SEDILE
SIÈGE - SUSPENSION
SITZFEDERUNG

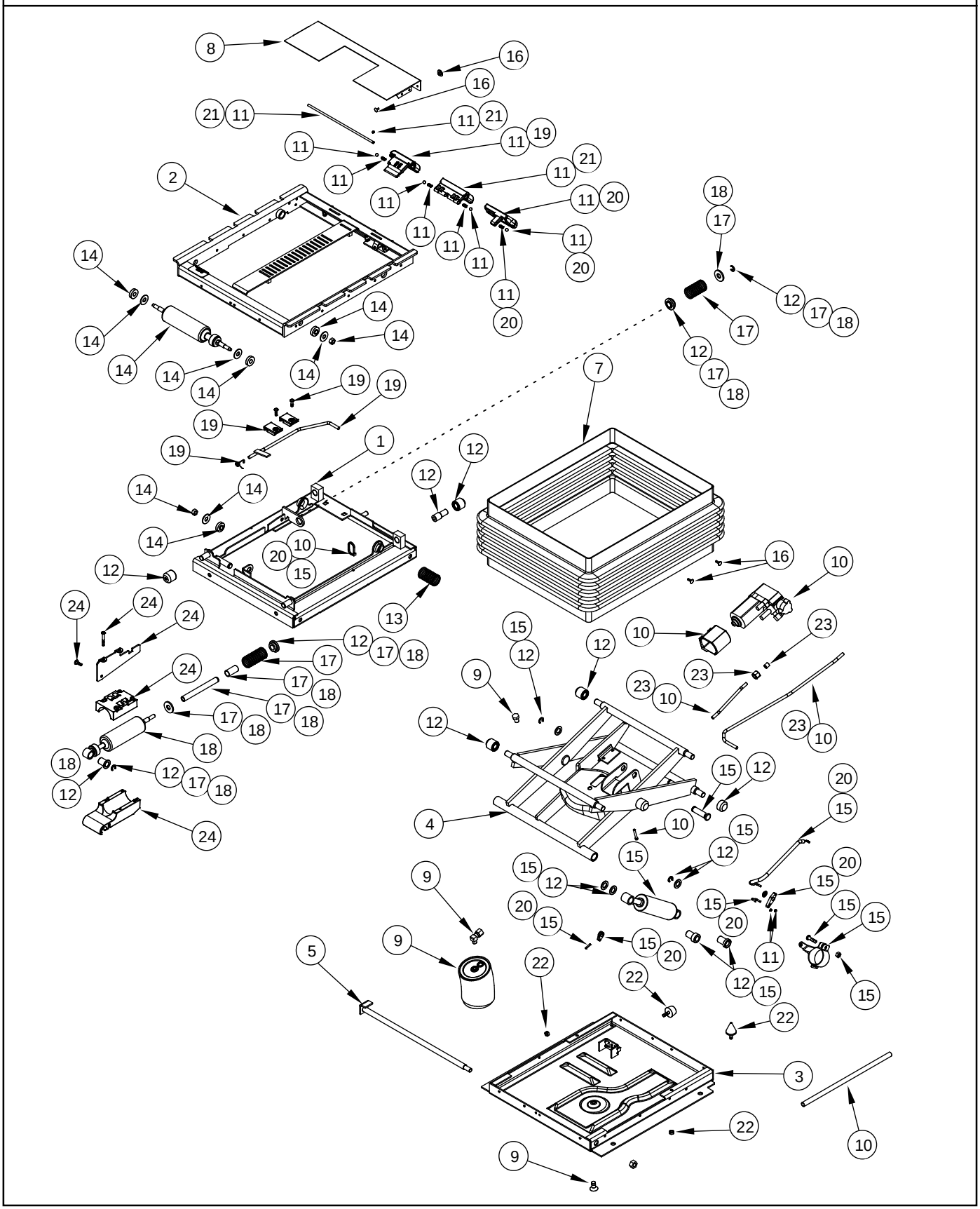

CONJUNTO DE LA SUSPENSIÓN - ASIENTO
CONJUNTO DA SUSPENSÃO DO ASSENTO
VERING - STOEL
OPHÆNGSSAMLING - SÆDE

R	N	P.N.	MOD	Q	Description Denominacion	Descrizione Denominação	Description Beschrijving	Bezeichnung Beskrivelse	L.C.
		374353A2		1	PACKAGE,SERVICE Inc. 1 - 25				
						CONFEZIONE, MANUT.	COLIS POUR RECHANGI	ERSATZPACKUNG	P663
					EMPAQUETADURA	JOGO DE SERVICO(PAC	PACKAGE,SERVICE	PACKAGE,SERVICE	
1		333273A1		1	HOUSING Upper	ALLOGGIAMENTO	CARTER	GEHÄUSE	014V
					CAVIDAD	ALOJAMENTO	HUIS	HUS	
2		333274A1		1	ISOLATOR	DISPOSITIVO ANTIVIB	ISOLATEUR	ISOLATOR	Z082
					AISLADOR	ISOLADOR	ISOLATOR	ISOLATOR	
3		333275A1		1	HOUSING Lower	ALLOGGIAMENTO	CARTER	GEHÄUSE	014V
					CAVIDAD	ALOJAMENTO	HUIS	HUS	
4		333276A1		1	ARM	BRACCIO	BRAS	ARM	0280
					BRAZO	BRAÇO	ARM	ARM	
5		302033A1		1	SHAFT	ALBERO	ARBRE	WELLE	016A
					EJE	VEIO	AS	AKSEL	
6		302027A1		1	HARNESS Not Shown	CABLAGGIO	FAISCEAU	KABELSTRANG	4160
					HAZ	CHICOTE	HARNESS	HARNESS	
7		333278A1		1	BOOT	CUFFIA	COIFFE	MANSCHETTE	330C
					CASQUETE	FOLE	KABELDOORGANG	MANCHET	
8		302029A2		1	PLATE	PIASTRA	PLAQUE	PLATTE	105P
					PLACA	CHAPA	PLAAT	PLADE	
9		333279A1		1	PACKAGE,SERVICE Air Spring				
						CONFEZIONE, MANUT.	COLIS POUR RECHANGI	ERSATZPACKUNG	P663
					EMPAQUETADURA	JOGO DE SERVICO(PAC	PACKAGE,SERVICE	PACKAGE,SERVICE	
10		333280A1		1	PACKAGE,SERVICE Air Compressor				
						CONFEZIONE, MANUT.	COLIS POUR RECHANGI	ERSATZPACKUNG	P663
					EMPAQUETADURA	JOGO DE SERVICO(PAC	PACKAGE,SERVICE	PACKAGE,SERVICE	
11		373469A1		1	PACKAGE,SERVICE Suspension Knob				
						CONFEZIONE, MANUT.	COLIS POUR RECHANGI	ERSATZPACKUNG	P663
					EMPAQUETADURA	JOGO DE SERVICO(PAC	PACKAGE,SERVICE	PACKAGE,SERVICE	
12		333283A2		1	PACKAGE,SERVICE Suspension Bearing And Rollers				
						CONFEZIONE, MANUT.	COLIS POUR RECHANGI	ERSATZPACKUNG	P663
					EMPAQUETADURA	JOGO DE SERVICO(PAC	PACKAGE,SERVICE	PACKAGE,SERVICE	
13		333284A1		1	PACKAGE,SERVICE Lateral Isolator Spring				
						CONFEZIONE, MANUT.	COLIS POUR RECHANGI	ERSATZPACKUNG	P663
					EMPAQUETADURA	JOGO DE SERVICO(PAC	PACKAGE,SERVICE	PACKAGE,SERVICE	
14		333285A1		1	PACKAGE,SERVICE Lateral Isolator Shock Absorber				
						CONFEZIONE, MANUT.	COLIS POUR RECHANGI	ERSATZPACKUNG	P663
					EMPAQUETADURA	JOGO DE SERVICO(PAC	PACKAGE,SERVICE	PACKAGE,SERVICE	
15		333286A1		1	PACKAGE,SERVICE Suspension Shock Absorber				
						CONFEZIONE, MANUT.	COLIS POUR RECHANGI	ERSATZPACKUNG	P663
					EMPAQUETADURA	JOGO DE SERVICO(PAC	PACKAGE,SERVICE	PACKAGE,SERVICE	
16		333659A1		1	PACKAGE,SERVICE Boot Pin				
						CONFEZIONE, MANUT.	COLIS POUR RECHANGI	ERSATZPACKUNG	P663
					EMPAQUETADURA	JOGO DE SERVICO(PAC	PACKAGE,SERVICE	PACKAGE,SERVICE	
17		333287A2		1	PACKAGE,SERVICE Fore And Aft Isolator Spring				
						CONFEZIONE, MANUT.	COLIS POUR RECHANGI	ERSATZPACKUNG	P663
					EMPAQUETADURA	JOGO DE SERVICO(PAC	PACKAGE,SERVICE	PACKAGE,SERVICE	
18		333288A2		1	PACKAGE,SERVICE Fore And Aft Shock Absorber				
						CONFEZIONE, MANUT.	COLIS POUR RECHANGI	ERSATZPACKUNG	P663
					EMPAQUETADURA	JOGO DE SERVICO(PAC	PACKAGE,SERVICE	PACKAGE,SERVICE	

09-31		p2	11/04

SUSPENSION ASSEMBLY - SEAT
GRUPPO DELLE SOSPENSIONI - SEDILE
SIÈGE - SUSPENSION
SITZFEDERUNG

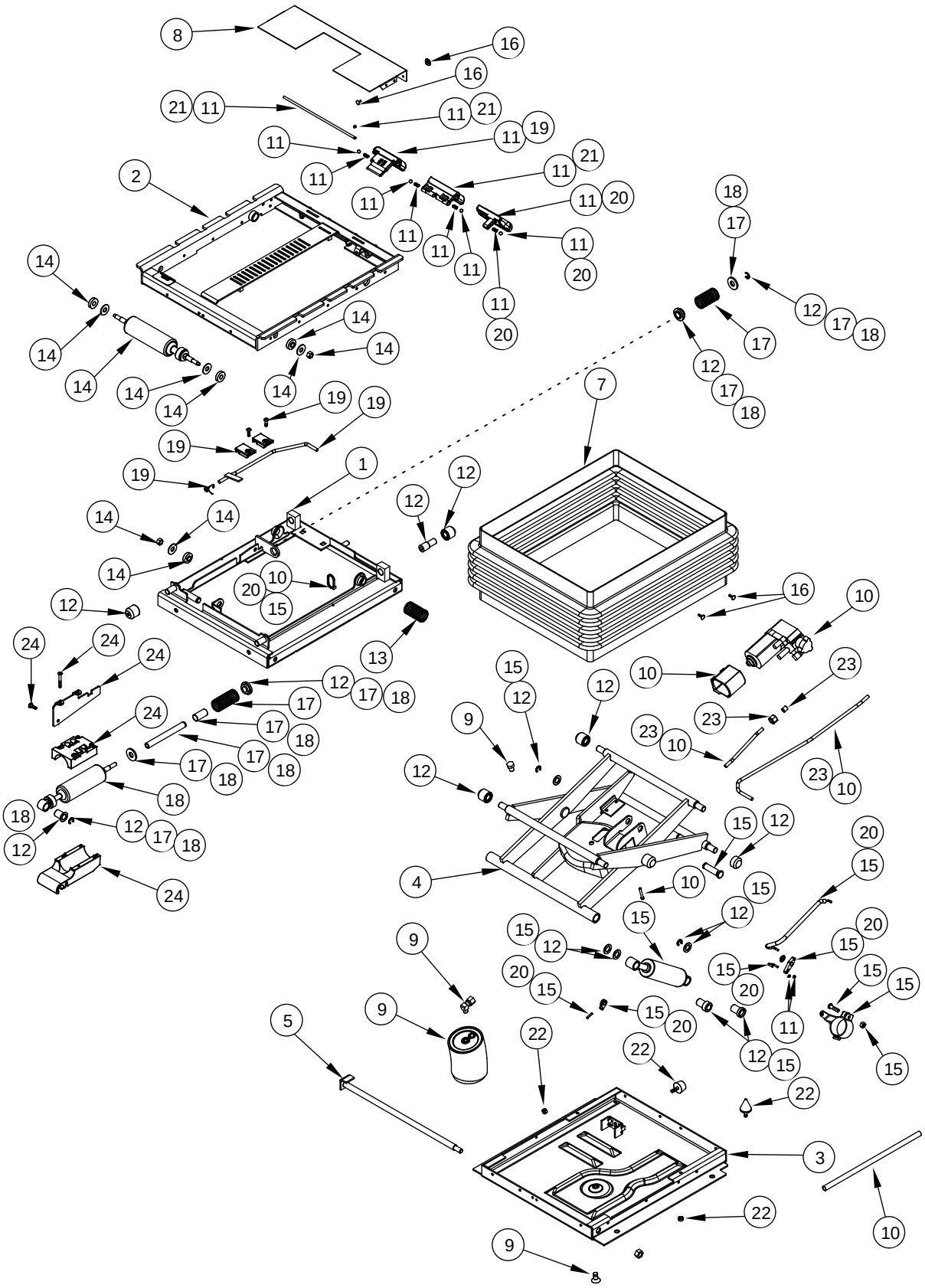

CONJUNTO DE LA SUSPENSIÓN - ASIENTO
CONJUNTO DA SUSPENSÃO DO ASSENTO
VERING - STOEL
OPHÆNGSSAMLING - SÆDE

R	N	P.N.	MOD	Q	Description Denominacion	Descrizione Denominação	Description Beschrijving	Bezeichnung Beskrivelse	L.C.
19		373470A2		1	PACKAGE,SERVICE Fore And Aft Isolator Control				
						CONFEZIONE, MANUT.	COLIS POUR RECHANGI	ERSATZPACKUNG	P663
					EMPAQUETADURA	JOGO DE SERVICO(PAC	PACKAGE,SERVICE	PACKAGE,SERVICE	
20		373472A1		1	PACKAGE,SERVICE Suspension Shock Absorber Control				
						CONFEZIONE, MANUT.	COLIS POUR RECHANGI	ERSATZPACKUNG	P663
					EMPAQUETADURA	JOGO DE SERVICO(PAC	PACKAGE,SERVICE	PACKAGE,SERVICE	
21		373473A1		1	PACKAGE,SERVICE Lateral Isolator Control				
						CONFEZIONE, MANUT.	COLIS POUR RECHANGI	ERSATZPACKUNG	P663
					EMPAQUETADURA	JOGO DE SERVICO(PAC	PACKAGE,SERVICE	PACKAGE,SERVICE	
22		333295A1		1	PACKAGE,SERVICE Suspension Bumper				
						CONFEZIONE, MANUT.	COLIS POUR RECHANGI	ERSATZPACKUNG	P663
					EMPAQUETADURA	JOGO DE SERVICO(PAC	PACKAGE,SERVICE	PACKAGE,SERVICE	
23		333660A1		1	PACKAGE,SERVICE Tube And Fitting				
						CONFEZIONE, MANUT.	COLIS POUR RECHANGI	ERSATZPACKUNG	P663
					EMPAQUETADURA	JOGO DE SERVICO(PAC	PACKAGE,SERVICE	PACKAGE,SERVICE	
24		333296A1		1	PACKAGE,SERVICE Fore And Aft Isolator Shock Block				
						CONFEZIONE, MANUT.	COLIS POUR RECHANGI	ERSATZPACKUNG	P663
					EMPAQUETADURA	JOGO DE SERVICO(PAC	PACKAGE,SERVICE	PACKAGE,SERVICE	
25		374359A1		1	PACKAGE,SERVICE Suspension Shock Cable				
						CONFEZIONE, MANUT.	COLIS POUR RECHANGI	ERSATZPACKUNG	P663
					EMPAQUETADURA	JOGO DE SERVICO(PAC	PACKAGE,SERVICE	PACKAGE,SERVICE	

09-32		p1	11/04

SEMI ACTIVE SUSPENSION ASSEMBLY - SEAT
GRUPPO DELLA SOSPENSIONE SEMIATTIVA - SEDILE
SIÈGE - SUSPENSION SEMI-ACTIVE
HALBAUTOMATISCHE SITZFEDERUNG

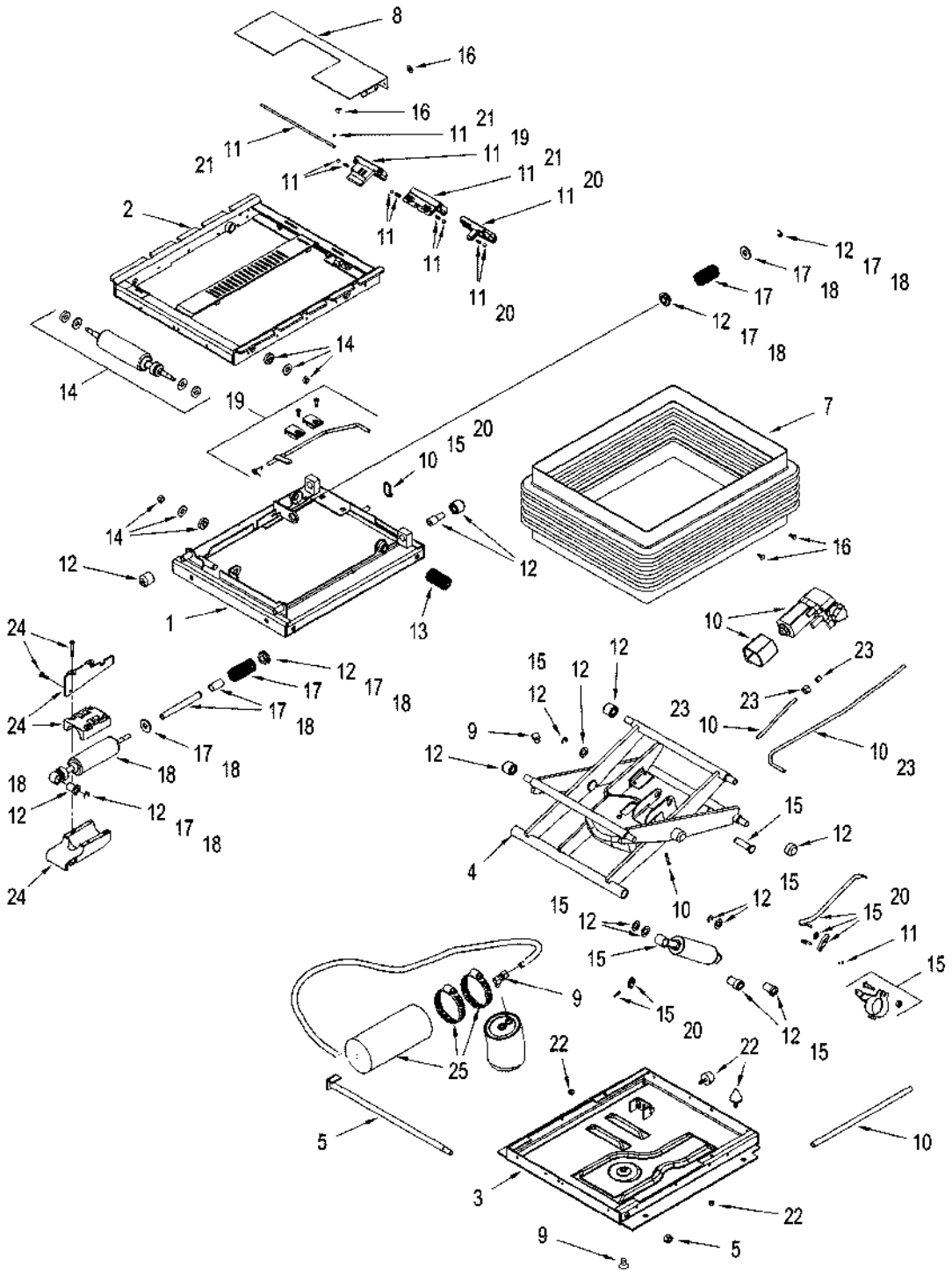

CONJUNTO DE LA SUSPENSIÓN SEMIACTIVA - ASIENTO
CONJUNTO DA SUSPENSÃO SEMI-ACTIVA DO ASSENTO
HALF ACTIEVE VERING - STOEL
SEMIAKTIV OPHÆNGSSAMLING - SÆDE

R	N	P.N.	MOD	Q	Description Denominacion	Descrizione Denominação	Description Beschrijving	Bezeichnung Beskrivelse	L.C.
		400184A1		1	KIT Suspension, Inc. 1 - 27	CORREDO	KIT	SATZ	305C
					EQUIPO	KIT	KIT	UDSTYR	
1		333273A1		1	HOUSING Upper	ALLOGGIAMENTO	CARTER	GEHÄUSE	014V
					CAVIDAD	ALOJAMENTO	HUIS	HUS	
2		333274A2		1	ISOLATOR	DISPOSITIVO ANTIVIB	ISOLATEUR	ISOLATOR	Z082
					AISLADOR	ISOLADOR	ISOLATOR	ISOLATOR	
3		86994256		1	HOUSING Lower	ALLOGGIAMENTO	CARTER	GEHÄUSE	014V
					CAVIDAD	ALOJAMENTO	HUIS	HUS	
4		86994258		1	ARM	BRACCIO	BRAS	AUSLEGER	130B
					BRAZO	BRAÇO	ARM	ARM	
5		302033A1		1	SHAFT	ALBERO	ARBRE	WELLE	016A
					EJE	VEIO	AS	AKSEL	
6		86994269		1	HARNESS, WIRE	INSIEME CAVI	FAISCEAU COMPLET	KABELSTRANG KPLT	070I
					GRUPO DE CABLES	CABLAGEM	KABELBOOM	KABELNET	
7		333278A1		1	BOOT	CUFFIA	COIFFE	MANSCHETTE	330C
					CASQUETE	FOLE	KABELDOORGANG	MANCHET	
8		302029A2		1	PLATE	PIASTRA	PLAQUE	PLATTE	105P
					PLACA	CHAPA	PLAAT	PLADE	
9		86994203		1	KIT, SERVICE Air Spring	KIT ASSISTENZIALE	KIT ASSISTANCE	WARTUNGSSATZ	021K
					KIT, SERVICE	KIT, SERVICE	KIT, SERVICE	SERVICE SAET	
10		87407038		1	KIT, SERVICE Compessor	KIT ASSISTENZIALE	KIT ASSISTANCE	WARTUNGSSATZ	021K
					KIT, SERVICE	KIT, SERVICE	KIT, SERVICE	SERVICE SAET	
11		87407047		1	KIT, SERVICE Knobs	KIT ASSISTENZIALE	KIT ASSISTANCE	WARTUNGSSATZ	021K
					KIT, SERVICE	KIT, SERVICE	KIT, SERVICE	SERVICE SAET	
12		333283A2		1	PACKAGE,SERVICE Suspension Bearing And Rollers				
						CONFEZIONE, MANUT.	COLIS POUR RECHANGI	ERSATZPACKUNG	P663
					EMPAQUETADURA	JOGO DE SERVICO(PAC	PACKAGE,SERVICE	PACKAGE,SERVICE	
13		333284A1		1	PACKAGE,SERVICE Lateral Isolator Spring				
						CONFEZIONE, MANUT.	COLIS POUR RECHANGI	ERSATZPACKUNG	P663
					EMPAQUETADURA	JOGO DE SERVICO(PAC	PACKAGE,SERVICE	PACKAGE,SERVICE	
14		333285A1		1	PACKAGE,SERVICE Lateral Isolator Shock Absorber				
						CONFEZIONE, MANUT.	COLIS POUR RECHANGI	ERSATZPACKUNG	P663
					EMPAQUETADURA	JOGO DE SERVICO(PAC	PACKAGE,SERVICE	PACKAGE,SERVICE	
15		86994260		1	KIT, SERVICE Shock	KIT ASSISTENZIALE	KIT ASSISTANCE	WARTUNGSSATZ	021K
					KIT, SERVICE	KIT, SERVICE	KIT, SERVICE	SERVICE SAET	
16		333659A1		1	PACKAGE,SERVICE Boot Pin				
						CONFEZIONE, MANUT.	COLIS POUR RECHANGI	ERSATZPACKUNG	P663
					EMPAQUETADURA	JOGO DE SERVICO(PAC	PACKAGE,SERVICE	PACKAGE,SERVICE	
17		333287A2		1	PACKAGE,SERVICE Fore And Aft Isolator Spring				
						CONFEZIONE, MANUT.	COLIS POUR RECHANGI	ERSATZPACKUNG	P663
					EMPAQUETADURA	JOGO DE SERVICO(PAC	PACKAGE,SERVICE	PACKAGE,SERVICE	
18		333288A2		1	PACKAGE,SERVICE Fore And Aft Shock Absorber				
						CONFEZIONE, MANUT.	COLIS POUR RECHANGI	ERSATZPACKUNG	P663
					EMPAQUETADURA	JOGO DE SERVICO(PAC	PACKAGE,SERVICE	PACKAGE,SERVICE	
19		373470A2		1	PACKAGE,SERVICE Fore And Aft Isolator Control				
						CONFEZIONE, MANUT.	COLIS POUR RECHANGI	ERSATZPACKUNG	P663
					EMPAQUETADURA	JOGO DE SERVICO(PAC	PACKAGE,SERVICE	PACKAGE,SERVICE	
20		87440465		1	KIT, SERVICE Control	KIT ASSISTENZIALE	KIT ASSISTANCE	WARTUNGSSATZ	021K
					KIT, SERVICE	KIT, SERVICE	KIT, SERVICE	SERVICE SAET	

SEMI ACTIVE SUSPENSION ASSEMBLY - SEAT
GRUPPO DELLA SOSPENSIONE SEMIATTIVA - SEDILE
SIÈGE - SUSPENSION SEMI-ACTIVE
HALBAUTOMATISCHE SITZFEDERUNG

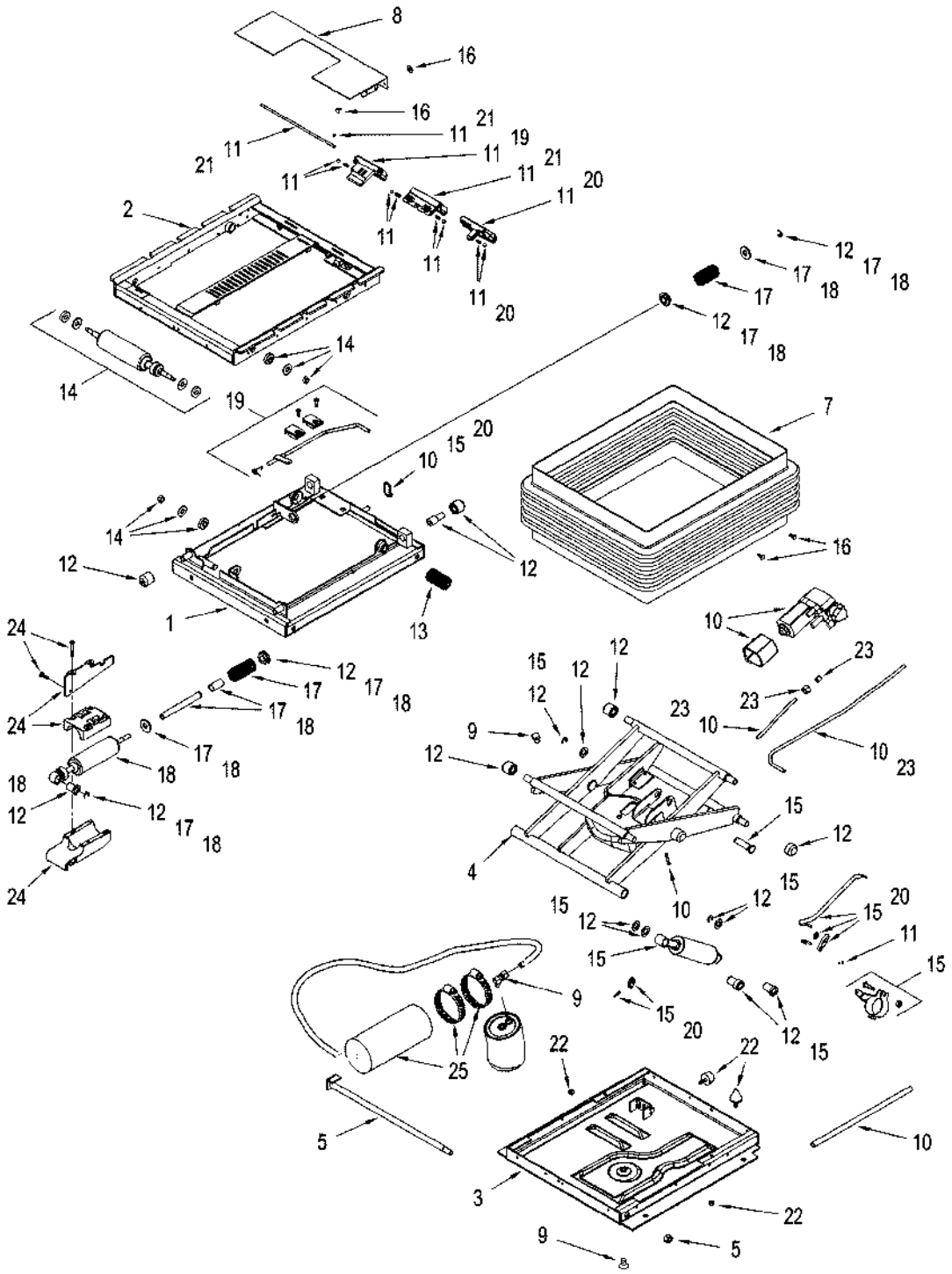

CONJUNTO DE LA SUSPENSIÓN SEMIACTIVA - ASIENTO
CONJUNTO DA SUSPENSÃO SEMI-ACTIVA DO ASSENTO
HALF ACTIEVE VERING - STOEL
SEMIAKTIV OPHÆNGSSAMLING - SÆDE

R	N	P.N.	MOD	Q	Description Denominacion	Descrizione Denominação	Description Beschrijving	Bezeichnung Beskrivelse	L.C.
21		373473A1		1	PACKAGE,SERVICE Lateral Isolator Control				
						CONFEZIONE, MANUT.	COLIS POUR RECHANGI	ERSATZPACKUNG	P663
					EMPAQUETADURA	JOGO DE SERVICO(PAC	PACKAGE,SERVICE	PACKAGE,SERVICE	
22		333295A1		1	PACKAGE,SERVICE Suspension Bumper				
						CONFEZIONE, MANUT.	COLIS POUR RECHANGI	ERSATZPACKUNG	P663
					EMPAQUETADURA	JOGO DE SERVICO(PAC	PACKAGE,SERVICE	PACKAGE,SERVICE	
23		374359A1		1	PACKAGE,SERVICE Suspension Shock Cable				
						CONFEZIONE, MANUT.	COLIS POUR RECHANGI	ERSATZPACKUNG	P663
					EMPAQUETADURA	JOGO DE SERVICO(PAC	PACKAGE,SERVICE	PACKAGE,SERVICE	
24		333296A1		1	PACKAGE,SERVICE Fore And Aft Isolator Shock Block				
						CONFEZIONE, MANUT.	COLIS POUR RECHANGI	ERSATZPACKUNG	P663
					EMPAQUETADURA	JOGO DE SERVICO(PAC	PACKAGE,SERVICE	PACKAGE,SERVICE	
25		86994268		1	KIT, SERVICE Air Tank	KIT ASSISTENZIALE	KIT ASSISTANCE	WARTUNGSSATZ	021K
					KIT, SERVICE	KIT, SERVICE	KIT, SERVICE	SERVICE SAET	
26		9845783		1	VALVE, CONTROL Air (Not Shown)				
						DISTRIBUTORE	DISTRIBUTEUR	STEUERGERAET	083D
					VALVULA DISTRIBUIDOF	VALVULA DE CONTROLE	KONTROLEKLEP	STYREVENTIL	
27		87435206		1	KIT Air Tank Hose (Not Shown)				
						CORREDO	KIT	SATZ	305C
					EQUIPO	KIT	KIT	UDSTYR	

09-33		p1	11/04

SEAT - INSTRUCTIONAL
SEDILE - ADDESTRAMENTO
SIÈGE - FORMATION
AUSBILDUNGSSITZ

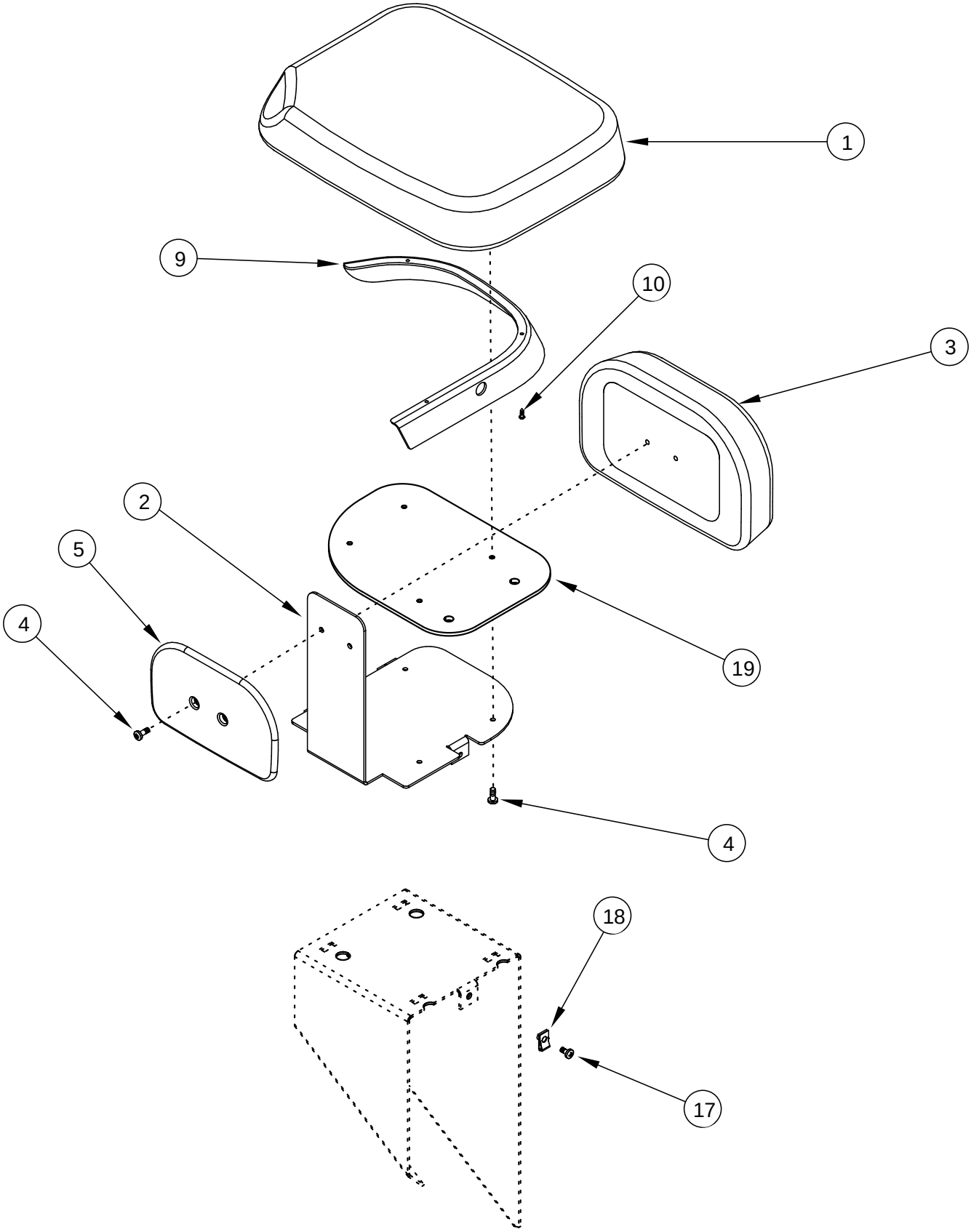

ASIENTO - PARA EL INSTRUCTOR
ASSENTO DE INSTRUÇÃO
STOEL - INSTRUCTIE-
SÆDE - VEJLEDNING

R	N	P.N.	MOD	Q	Description Denominacion	Descrizione Denominação	Description Beschrijving	Bezeichnung Beskrivelse	L.C.
1	1, 2	359027A1		1	CUSHION, SEAT COJIN	CUSCINO SEDILE ALMOFADA	COUSSIN DE SIEGE KUSSEN	SITZPOLSTER SÆDEHYNDE	P780
1	3	359030A2		1	COVER, SEAT PROTECTOR	COPERCHIO, SEDILE TAMPA ASSENTO	HOUSSE COVER, SEAT	SITZBEZUG COVER, SEAT	P816
2		296316A3		1	SUPPORT SOPORTE	SUPPORTO SUPORTE	SUPPORT STEUN	STÜTZE BESLAG	300S
3	1, 2	359028A1		1	COVER, BACKREST COJIN DE RESPALDO	CUSCINO, SCHIENALE TAMPA TRASEIRA	COUSSIN DE DOSSIER COVER, BACKREST	RÜCKENPOLSTER COVER, BACKREST	P814
3	3	359031A2		1	COVER, BACKREST COJIN DE RESPALDO	CUSCINO, SCHIENALE TAMPA TRASEIRA	COUSSIN DE DOSSIER COVER, BACKREST	RÜCKENPOLSTER COVER, BACKREST	P814
4		840-2616		6	SCREW M6 x 16; 4.8 TORNILLO	VITE PARAFUSO	VIS SCHROEF	SCHRAUBE SKRUE	7450
5		359029A1		1	COVER TAPA	COPERCHIO TAMPA	COUVERCLE COVER	DECKEL COVER	2250
9		359039A1		1	BEZEL MARCO	MOSTRINA CHAPA DE ORNAMENTC	ENCADREMENT SIERPLAAT	DECKRING ORNAMENTERING	0680
10		760-14113		3	SCREW 3,5 x 12,7 mm TORNILLO	VITE PARAFUSO	VIS SCHROEF	SCHRAUBE SKRUE	7450
17		844-6025		1	SCREW M6 x 25; 8.8 TORNILLO	VITE PARAFUSO	VIS SCHROEF	SCHRAUBE SKRUE	P136
18		833-40306		1	NUT M6 TUERCA	DADO PORCA	ECROU MOER	MUTTER MØTRIK	5780
19		381940A1		1	PANEL CONTRAPANEL	PANNELLO PAINEL	PANNEAU PANEELWERK	TAFEL PANEL	6070

(1) Standard Cab
(2) Deluxe Cab
(3) Luxury Cab

09-34		p1	12/04

CONSOLE, RIGHT HAND, STANDARD CAB
CONSOLLE, DESTRA, CABINA STANDARD
CONSOLE DROITE, CABINE STANDARD
RECHTE BEDIENKONSOLE DER STANDARDKABINE

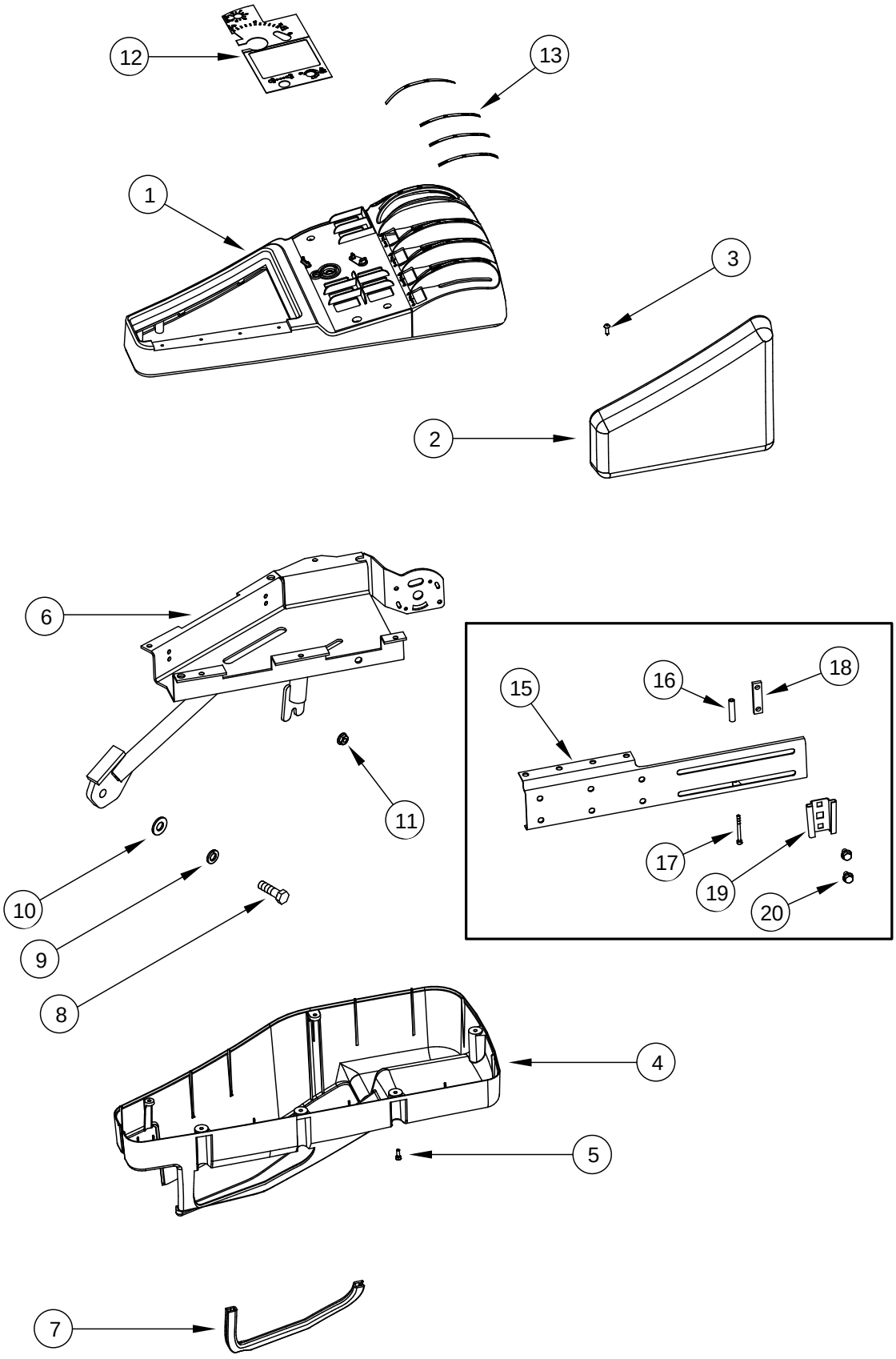

CONSOLA, DERECHA, CABINA ESTÁNDAR
CONSOLA DIREITA DA CABINA STANDARD
PANEEL, RECHTS, STANDAARD-CABINE
KONSOL, HØJRE, STANDARD FØRERHUS

R	N	P.N.	MOD	Q	Description Denominacion	Descrizione Denominação	Description Beschrijving	Bezeichnung Beskrivelse	L.C.
1		408521A3		1	HOUSING Upper, Inc. 13 CAVIDAD	ALLOGGIAMENTO ALOJAMENTO	CARTER HUIS	GEHÄUSE HUS	014V
2		277204A2		1	CUSHION COJIN	CUSCINO COXIM	COUSSIN CUSHION	POLSTER PUDE	2460
3		760-14316		4	SCREW M4,2 x 16 TORNILLO	VITE PARAFUSO	VIS SCHROEF	SCHRAUBE SKRUE	7450
4		358814A1		1	HOUSING Lower CAVIDAD	ALLOGGIAMENTO ALOJAMENTO	CARTER HUIS	GEHÄUSE HUS	4540
5		864-4012		6	SCREW M4 x 12 TORNILLO	VITE PARAFUSO	VIS SCHROEF	SCHRAUBE SKRUE	7450
6		319913A4		1	CONSOLE REPISA	MENSOLA CONSOLA	CONSOLE KONZOOL	KONSOLE KONSOL	080M
7		329057A1		1	LINING REVESTEMIENTO	RIVESTIMENTO REVESTIMENTO	GARNITURE LINING	BELAG FORING	5260
8		627-12040		1	BOLT M12 x 40; 10.9 TORNILLO	BULLONE PARAFUSO	BOULON BOUT	SCHAUBENBOLZEN SKRUE	140B
9		892-11012		1	WASHER, LOCK M12 ARANDELA DE FRENO	ROSETTA DI SICUREZZA ANILHA DE FIXACAO	RONDELLE FREIN VEERRING	SPRENGRING LAASESKIVE	132R
10		895-15012		1	WASHER 13,5 x 28 x 2,5 mm ARANDELA	ROSETTA PIANA ANILHA	RONDELLE SLUITRING	SCHEIBE FLADSKIVE	9720
11		832-10408		1	NUT M8; 8 TUERCA	DADO PORCA	ECROU MOER	MUTTER MØTRIK	010D
12		406315A2		1	DECAL CALCOMANIA	DECALCOMANIA DECALCOMANIA	DECALCOMANIE DECAL	ABZIEHBILD TRANSFER	012D
13		407759A1		1	DECAL CALCOMANIA	DECALCOMANIA DECALCOMANIA	DECALCOMANIE DECAL	ABZIEHBILD TRANSFER	P903
		371336A1		1	KIT Implement Control Bracket, Inc. 15 - 20 EQUIPO	CORREDO KIT	KIT KIT	SATZ UDSTYR	305C
15		377950A1		1	BRACKET PIEZA DE SOPORTE	STAFFA BRACADEIRA	PATTE FIXATION STEUNBEUGEL	HALTERUNG BESLAG	225S
16		371731A1		1	SPACER SEPARADOR	DISTANZIALE ESPACADOR	ENTRETOISE AFSTANDSRING	DISTANZSTÜCK AFSTANDSSTYKKE	075D
17		864-4060		1	SCREW M4 X 60; 8.8 TORNILLO	VITE PARAFUSO	VIS SCHROEF	SCHRAUBE SKRUE	7450
18		368761A1		1	PLATE PLACA	PIASTRA CHAPA	PLAQUE PLAAT	PLATTE PLADE	105P
19		A59457		1	BRACKET PIEZA DE SOPORTE	STAFFA BRACADEIRA	PATTE FIXATION STEUNBEUGEL	HALTERUNG BESLAG	225S
20		844-8012		2	SCREW M8 x 12; 8.8 TORNILLO	VITE PARAFUSO	VIS SCHROEF	SCHRAUBE SKRUE	7450

09-35		p1	12/04

CONSOLE, RIGHT HAND, DELUXE AND LUXURY CAB
CONSOLLE, DESTRA, CABINA DELUXE E LUXURY
CONSOLE DROITE, CABINES DELUXE ET LUXURY
RECHTE BEDIENKONSOLE DER DELUXE- UND LUXUSKABINE

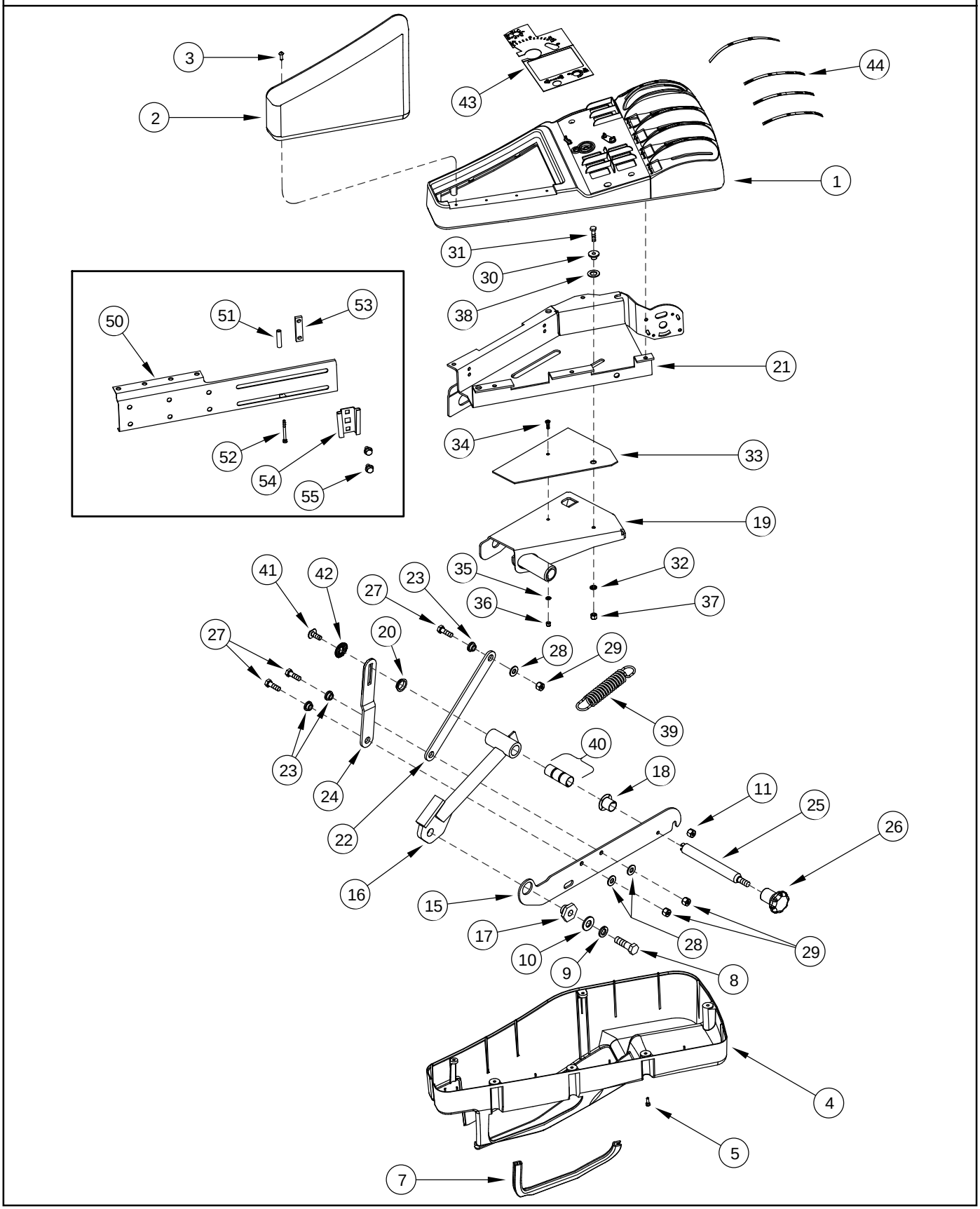

CONSOLA, DERECHA, CABINA DELUXE Y LUXURY
CONSOLA DIREITA DA CABINA DELUXE E DE LUXO
PANEEL, RECHTS, DELUXE- EN LUXURY-CABINE
KONSOL, HØJRE, DELUXE OG LUKSUS FØRERHUS

R	N	P.N.	MOD	Q	Description Denominacion	Descrizione Denominação	Description Beschrijving	Bezeichnung Beskrivelse	L.C.
1		408521A3		1	HOUSING Upper, Inc. 44 CAVIDAD	ALLOGGIAMENTO ALOJAMENTO	CARTER HUIS	GEHÄUSE HUS	014V
2	1	277204A2		1	CUSHION COJIN	CUSCINO COXIM	COUSSIN CUSHION	POLSTER PUDE	2460
2	2	358812A1		1	CUSHION ASSY. COJIN (CONJUNTO)	GRUPPO CUSCINO COXIM CONJUNTO	COUSSIN (ASSEMBLE) CUSHION ASSY.	KISSEN (KPLT.) CUSHION ASSY.	P601
3		760-14316		4	SCREW M4,2 x 16 TORNILLO	VITE PARAFUSO	VIS SCHROEF	SCHRAUBE SKRUE	7450
4		358814A1		1	HOUSING Lower CAVIDAD	ALLOGGIAMENTO ALOJAMENTO	CARTER HUIS	GEHÄUSE HUS	4540
5		864-4012		6	SCREW M4 x 12 TORNILLO	VITE PARAFUSO	VIS SCHROEF	SCHRAUBE SKRUE	7450
7		329057A1		1	LINING REVESTEMIENTO	RIVESTIMENTO REVESTIMENTO	GARNITURE LINING	BELAG FORING	5260
8		627-12040		1	BOLT M12 x 40; 10.9 TORNILLO	BULLONE PARAFUSO	BOULON BOUT	SCHAUBENBOLZEN SKRUE	140B
9		892-11012		1	WASHER, LOCK M12 ARANDELA DE FRENO	ROSETTA DI SICUREZZA ANILHA DE FIXACAO	RONDELLE FREIN VEERRING	SPRENGRING LAASESKIVE	132R
10		895-15012		1	WASHER 13,5 x 28 x 2,5 mm ARANDELA	ROSETTA PIANA ANILHA	RONDELLE SLUITRING	SCHEIBE FLADSKIVE	9720
11		832-10408		1	NUT M8; 8 TUERCA	DADO PORCA	ECROU MOER	MUTTER MØTRIK	010D
		302092A5		1	CONSOLE Inc. 15 - 42 REPISA	MENSOLA CONSOLA	CONSOLE KONZOOL	KONSOLE KONSOL	080M
15		NSS		1	NOT SERVICED SEPARATELY Plate NO SE REPARA SEPARA	NON FORNITO SEPARAT NOT SERVICED SEPARA	NON FOURNI SEPAREMI NIET ALLEEN VERKRIJG	KEIN ERSATZTEIL NOT SERVICED SEPARA	064N
16		NSS		1	NOT SERVICED SEPARATELY Support NO SE REPARA SEPARA	NON FORNITO SEPARAT NOT SERVICED SEPARA	NON FOURNI SEPAREMI NIET ALLEEN VERKRIJG	KEIN ERSATZTEIL NOT SERVICED SEPARA	064N
17		222292A1		1	NUT TUERCA	DADO PORCA	ECROU MOER	MUTTER MØTRIK	010D
18		185062R1		1	BUSHING CASQUILLO	BOCCOLA CASQUILHO	BAGUE LAGERBUS	BUECHSE BOESNING	1140
19		NSS		1	NOT SERVICED SEPARATELY Support NO SE REPARA SEPARA	NON FORNITO SEPARAT NOT SERVICED SEPARA	NON FOURNI SEPAREMI NIET ALLEEN VERKRIJG	KEIN ERSATZTEIL NOT SERVICED SEPARA	064N
20		294296A1		1	BUSHING CASQUILLO	BOCCOLA CASQUILHO	BAGUE LAGERBUS	BUECHSE BOESNING	095B
21		NSS		1	NOT SERVICED SEPARATELY Support NO SE REPARA SEPARA	NON FORNITO SEPARAT NOT SERVICED SEPARA	NON FOURNI SEPAREMI NIET ALLEEN VERKRIJG	KEIN ERSATZTEIL NOT SERVICED SEPARA	064N
22		NSS		1	NOT SERVICED SEPARATELY Bracket NO SE REPARA SEPARA	NON FORNITO SEPARAT NOT SERVICED SEPARA	NON FOURNI SEPAREMI NIET ALLEEN VERKRIJG	KEIN ERSATZTEIL NOT SERVICED SEPARA	064N

(1) Deluxe Cab
(2) Luxury Cab

09-35		p2	12/04

CONSOLE, RIGHT HAND, DELUXE AND LUXURY CAB
CONSOLLE, DESTRA, CABINA DELUXE E LUXURY
CONSOLE DROITE, CABINES DELUXE ET LUXURY
RECHTE BEDIENKONSOLE DER DELUXE- UND LUXUSKABINE

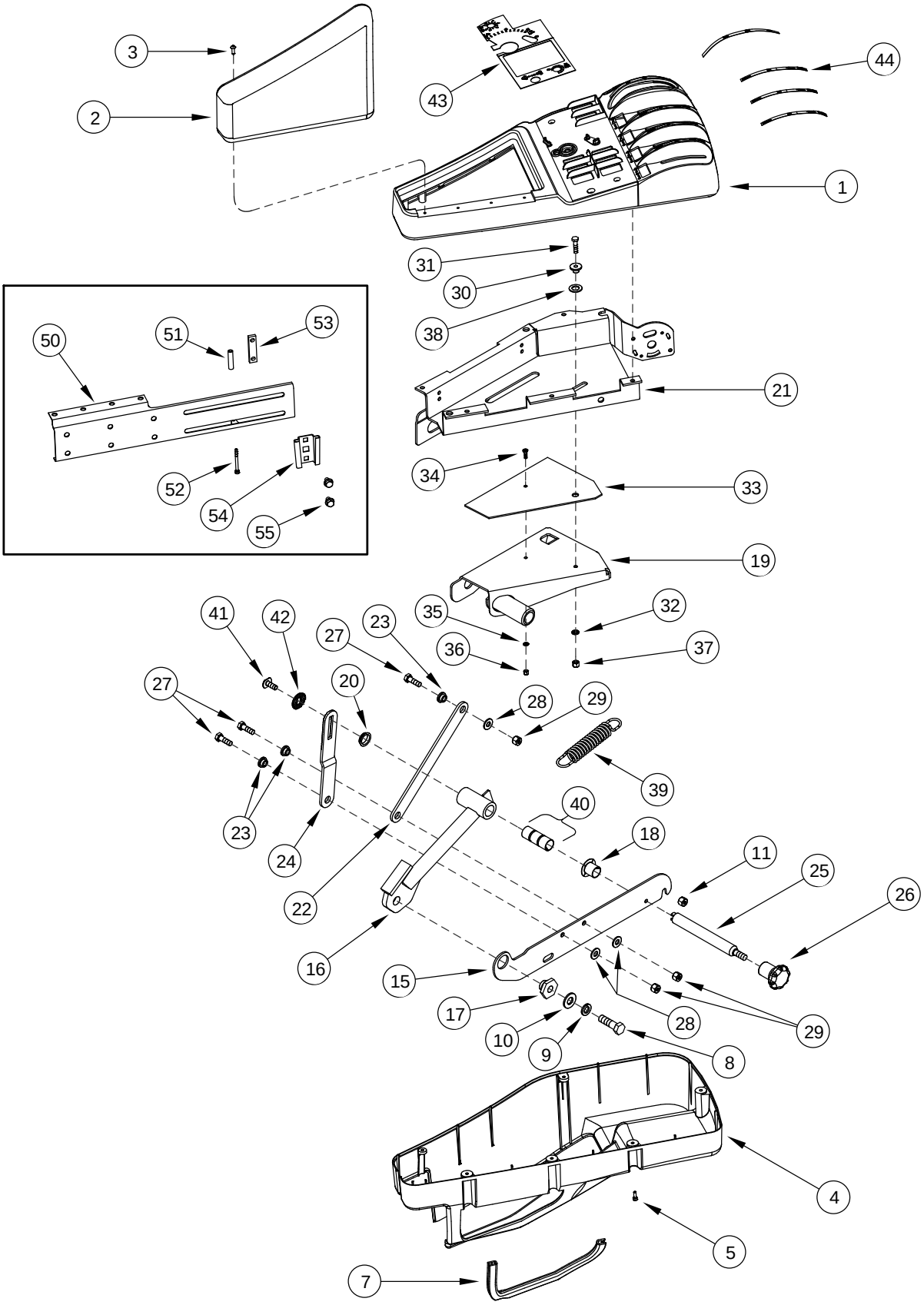

CONSOLA, DERECHA, CABINA DELUXE Y LUXURY
CONSOLA DIREITA DA CABINA DELUXE E DE LUXO
PANEEL, RECHTS, DELUXE- EN LUXURY-CABINE
KONSOL, HØJRE, DELUXE OG LUKSUS FØRERHUS

R	N	P.N.	MOD	Q	Description Denominacion	Descrizione Denominação	Description Beschrijving	Bezeichnung Beskrivelse	L.C.
23		NSS		3	NOT SERVICED SEPARATELY Washer, Special				
						NON FORNITO SEPARAT	NON FOURNI SEPAREMI	KEIN ERSATZTEIL	064N
					NO SE REPARA SEPARA	NOT SERVICED SEPARA	NIET ALLEEN VERKRIJG	NOT SERVICED SEPARA	
24		NSS		1	NOT SERVICED SEPARATELY Bracket				
						NON FORNITO SEPARAT	NON FOURNI SEPAREMI	KEIN ERSATZTEIL	064N
					NO SE REPARA SEPARA	NOT SERVICED SEPARA	NIET ALLEEN VERKRIJG	NOT SERVICED SEPARA	
25		NSS		1	NOT SERVICED SEPARATELY Bolt, Special				
						NON FORNITO SEPARAT	NON FOURNI SEPAREMI	KEIN ERSATZTEIL	064N
					NO SE REPARA SEPARA	NOT SERVICED SEPARA	NIET ALLEEN VERKRIJG	NOT SERVICED SEPARA	
26		319870A1		1	KNOB	POMELLO	POMMEAU	KNOPF	150P
					POMO	BOTAO	KNOP	KNAP	
27		627-8025		3	BOLT M8 x 25; 10.9	BULLONE	BOULON	SCHAUBENBOLZEN	140B
					TORNILLO	PARAFUSO	BOUT	SKRUE	
28		895-15008		3	WASHER 9 x 20 x 1,6 mm	ROSETTA PIANA	RONDELLE	SCHEIBE	9720
					ARANDELA	ANILHA	SLUITRING	FLADSKIVE	
29		832-10408		3	NUT M8; 8	DADO	ECROU	MUTTER	010D
					TUERCA	PORCA	MOER	MØTRIK	
30		277582A1		1	WASHER	ROSETTA PIANA	RONDELLE	BEILAGSCHEIBE	131R
					ARANDELA	ANILHA	SLUITRING	FLADSKIVE	
31		628-6025		1	SCREW M6 x 25; 10.9	VITE	VIS	SCHRAUBE	7450
					TORNILLO	PARAFUSO	SCHROEF	SKRUE	
32		895-11006		1	WASHER 6,6 x 12 x 1,6 mm	ROSETTA PIANA	RONDELLE	BEILAGSCHEIBE	131R
					ARANDELA	ANILHA	SLUITRING	FLADSKIVE	
33		277576A1		1	SPACER	DISTANZIALE	ENTRETOISE	DISTANZSTÜCK	075D
					SEPARADOR	ESPACADOR	AFSTANDSRING	AFSTANDSSTYKKE	
34		840-1414		1	SCREW M4 x 14	VITE	VIS	SCHRAUBE	7450
					TORNILLO	PARAFUSO	SCHROEF	SKRUE	
35		895-11004		1	WASHER 4,3 x 9 x 0,8 mm	ROSETTA PIANA	RONDELLE	SCHEIBE	9720
					ARANDELA	ANILHA	SLUITRING	FLADSKIVE	
36		832-10404		1	NUT M4; 8	DADO	ECROU	MUTTER	5780
					TUERCA	PORCA	MOER	MØTRIK	
37		832-10406		1	NUT M6; 8	DADO	ECROU	MUTTER	5780
					TUERCA	PORCA	MOER	MØTRIK	
38		277570A1		1	WASHER	ROSETTA PIANA	RONDELLE	BEILAGSCHEIBE	131R
					ARANDELA	ANILHA	SLUITRING	FLADSKIVE	
39		NSS		1	NOT SERVICED SEPARATELY Spring				
						NON FORNITO SEPARAT	NON FOURNI SEPAREMI	KEIN ERSATZTEIL	064N
					NO SE REPARA SEPARA	NOT SERVICED SEPARA	NIET ALLEEN VERKRIJG	NOT SERVICED SEPARA	
40		294295A1		3	BUSHING	BOCCOLA	BAGUE	BUECHSE	095B
					CASQUILLO	CASQUILHO	LAGERBUS	BOESNING	
41		NSS		1	NOT SERVICED SEPARATELY Bolt, Special				
						NON FORNITO SEPARAT	NON FOURNI SEPAREMI	KEIN ERSATZTEIL	064N
					NO SE REPARA SEPARA	NOT SERVICED SEPARA	NIET ALLEEN VERKRIJG	NOT SERVICED SEPARA	
42		NSS		1	NOT SERVICED SEPARATELY Washer, Special				
						NON FORNITO SEPARAT	NON FOURNI SEPAREMI	KEIN ERSATZTEIL	064N
					NO SE REPARA SEPARA	NOT SERVICED SEPARA	NIET ALLEEN VERKRIJG	NOT SERVICED SEPARA	
43		406315A2		1	DECAL	DECALCOMANIA	DECALCOMANIE	ABZIEHBILD	012D
					CALCOMANIA	DECALCOMANIA	DECAL	TRANSFER	

09-35		p3	12/04

CONSOLE, RIGHT HAND, DELUXE AND LUXURY CAB
CONSOLLE, DESTRA, CABINA DELUXE E LUXURY
CONSOLE DROITE, CABINES DELUXE ET LUXURY
RECHTE BEDIENKONSOLE DER DELUXE- UND LUXUSKABINE

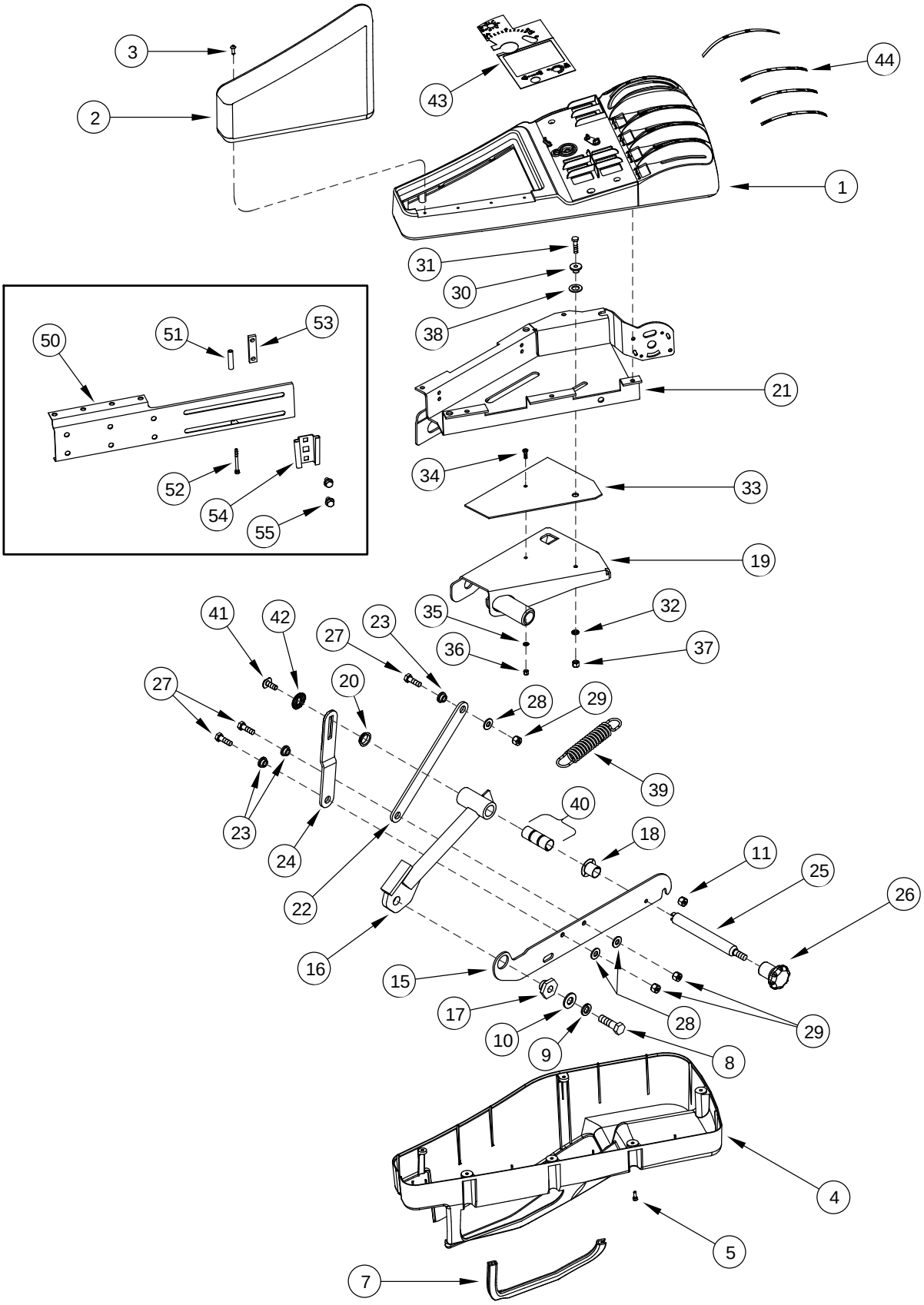

CONSOLA, DERECHA, CABINA DELUXE Y LUXURY
CONSOLA DIREITA DA CABINA DELUXE E DE LUXO
PANEEL, RECHTS, DELUXE- EN LUXURY-CABINE
KONSOL, HØJRE, DELUXE OG LUKSUS FØRERHUS

R	N	P.N.	MOD	Q	Description Denominacion	Descrizione Denominação	Description Beschrijving	Bezeichnung Beskrivelse	L.C.
44		407759A1		1	DECAL CALCOMANIA	DECALCOMANIA DECALCOMANIA	DECALCOMANIE DECAL	ABZIEHBILD TRANSFER	P903
		371336A1		1	KIT Implement Control Bracket, Inc. 50 - 55 EQUIPO	CORREDO KIT	KIT KIT	SATZ UDSTYR	305C
50		377950A1		1	BRACKET PIEZA DE SOPORTE	STAFFA BRACADEIRA	PATTE FIXATION STEUNBEUGEL	HALTERUNG BESLAG	225S
51		371731A1		1	SPACER SEPARADOR	DISTANZIALE ESPACADOR	ENTRETOISE AFSTANDSRING	DISTANZSTÜCK AFSTANDSSTYKKE	075D
52		864-4060		1	SCREW M4 X 60; 8.8 TORNILLO	VITE PARAFUSO	VIS SCHROEF	SCHRAUBE SKRUE	7450
53		368761A1		1	PLATE PLACA	PIASTRA CHAPA	PLAQUE PLAAT	PLATTE PLADE	105P
54		A59457		1	BRACKET PIEZA DE SOPORTE	STAFFA BRACADEIRA	PATTE FIXATION STEUNBEUGEL	HALTERUNG BESLAG	225S
55		844-8012		2	SCREW M8 x 12; 8.8 TORNILLO	VITE PARAFUSO	VIS SCHROEF	SCHRAUBE SKRUE	7450

09-36		p1	11/04

MONITOR MOUNTING - CAB ROOF
SUPPORTO DEL DISPOSITIVO DI CONTROLLO - TETTO DELLA CABINA
MONTAGE DU MONITEUR - TOIT DE LA CABINE
MONITORHALTERUNG FÜR KABINENDACH

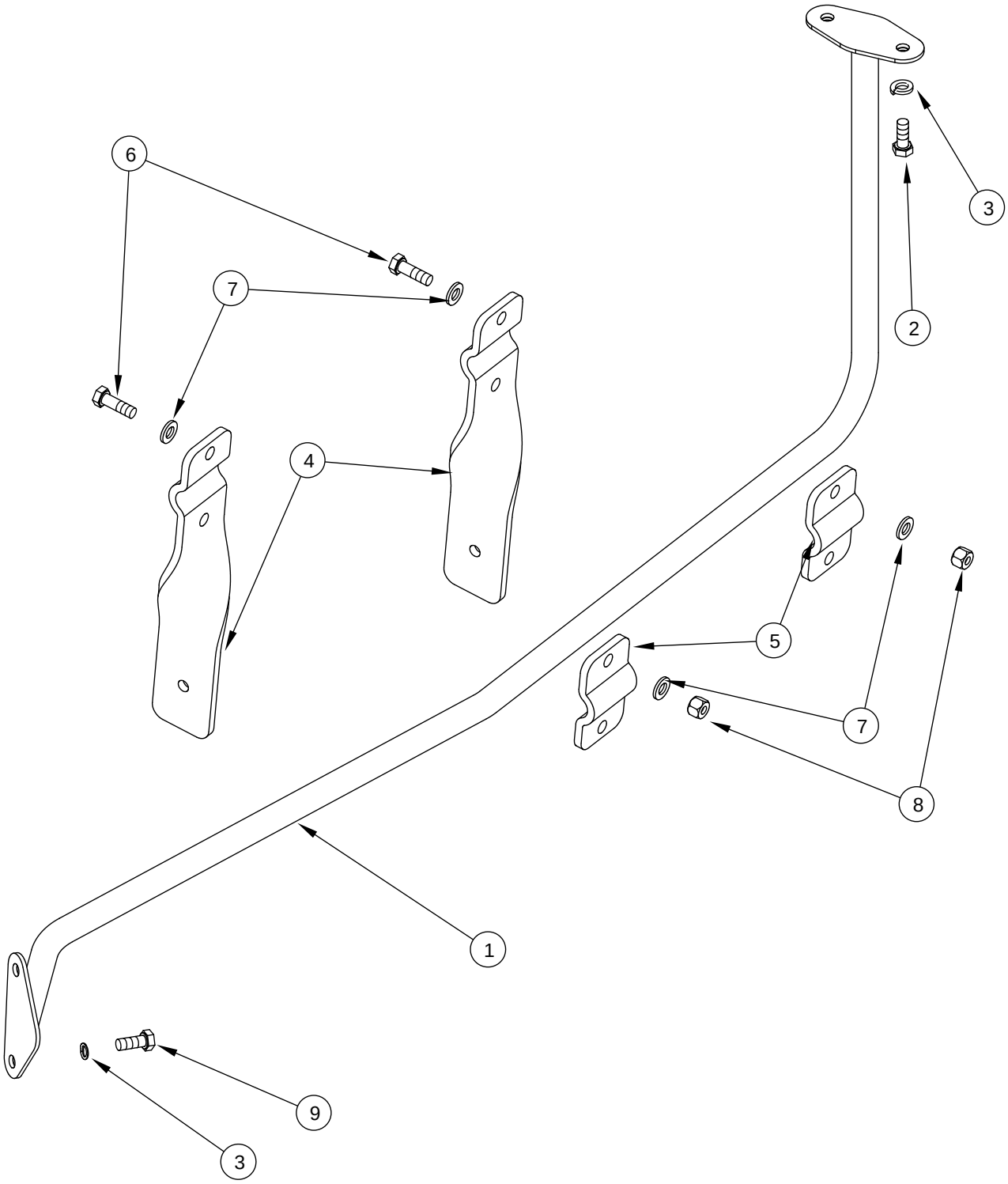

MONTAJE DEL MONITOR - TECHO DE LA CABINA
SUPORTE DO MONITOR NO TECTO DA CABINA
MONITORBEVESTIGING - CABINEDAK
KONTROLLER MONTERING - FØRERHUSTAG

R	N	P.N.	MOD	Q	Description Denominacion	Descrizione Denominação	Description Beschrijving	Bezeichnung Beskrivelse	L.C.
1		301152A3		1	BAR BARRA	BARRA BARRA	BARRE STAAF	STAB BJÆLKE	530B
2		514-632		2	BOLT M8 X 25; 8.8 TORNILLO	BULLONE PARAFUSO	BOULON BOUT	SCHAUBENBOLZEN SKRUE	0810
3		892-14008		4	WASHER M8 ARANDELA	ROSETTA PIANA ANILHA	RONDELLE SLUITRING	SCHEIBE FLADSKIVE	9720
4		103213A1		2	HOLDER SOPORTE	SOSTEGNO SUPORTE	SUPPORT HOUDER	HALTER HOLDER	174S
5		103226A1		2	CLAMP BORNE	MORSETTO BORNE	BRIDE KLEM	KLEMME SPÆNDEBÅND	120M
6		514-633		4	SCREW M8 x 30; 8.8 TORNILLO	VITE PARAFUSO	VIS SCHROEF	SCHRAUBE SKRUE	7450
7		256402A1		8	WASHER 9 x 17 x 1,6 mm ARANDELA	ROSETTA PIANA ANILHA	RONDELLE SLUITRING	BEILAGSCHEIBE FLADSKIVE	131R
8		832-10408		4	NUT M8; 8 TUERCA	DADO PORCA	ECROU MOER	MUTTER MØTRIK	010D
9		514-620		2	BOLT M8 x 20; 8.8 TORNILLO	BULLONE PARAFUSO	BOULON BOUT	SCHAUBENBOLZEN SKRUE	0810

09-37		p1	11/04

MONITOR MOUNTING - CAB A POST
SUPPORTO DEL DISPOSITIVO DI CONTROLLO - MONTANTE AD A DELLA CABINA
MONTAGE DU MONITEUR - MONTANT EN A DE LA CABINE
MONITORHALTERUNG FÜR KABINEN-HAUPTRAHMEN

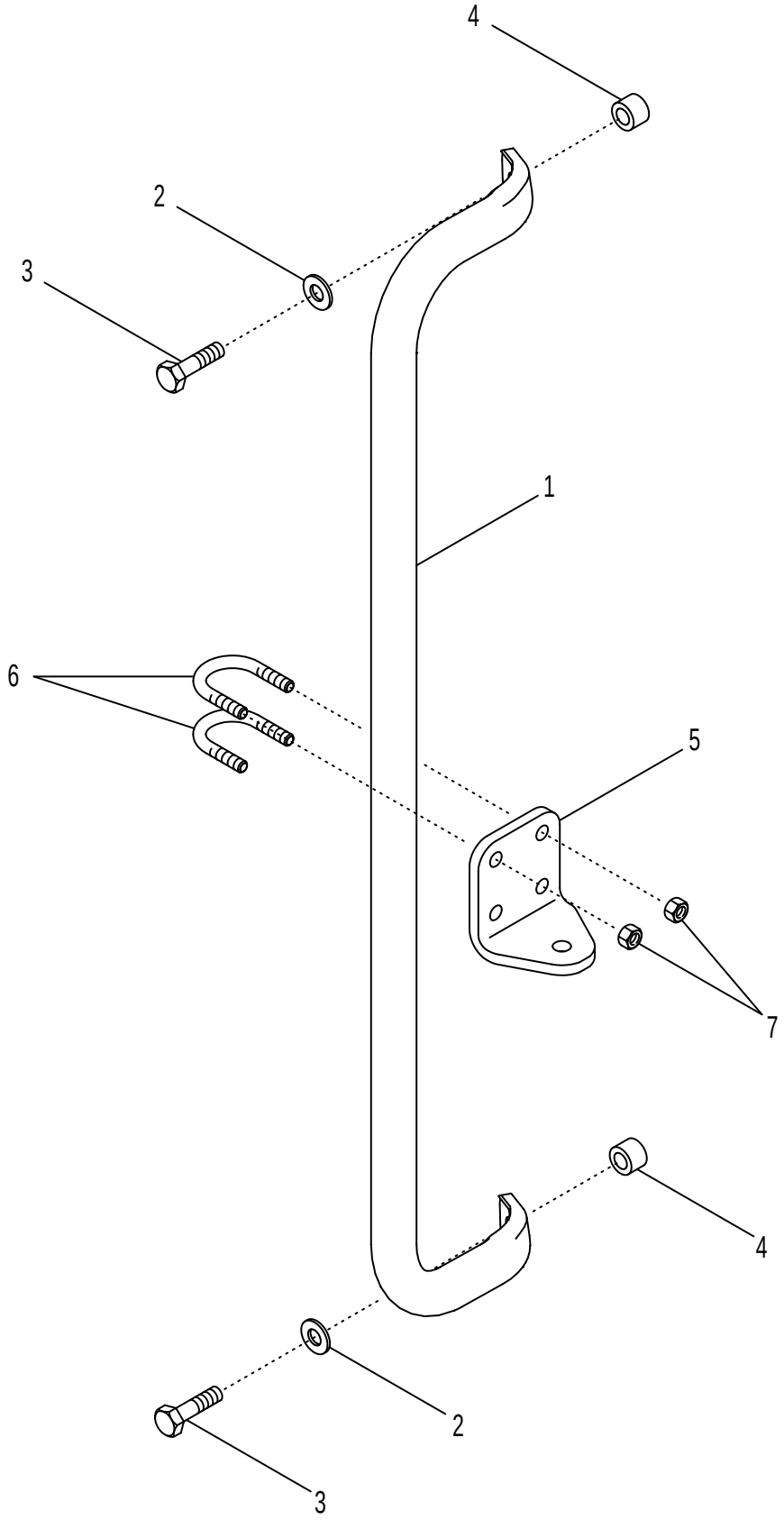

MONTAJE DEL MONITOR - POSTE A DE LA CABINA
SUPORTE DO MONITOR NO POSTE A DA CABINA
MONITORBEVESTIGING - A-STIJL CABINE
KONTROLLER MONTERING - FØRERHUS A STOLPE

R	N	P.N.	MOD	Q	Description Denominacion	Descrizione Denominação	Description Beschrijving	Bezeichnung Beskrivelse	L.C.
1		369275A1		1	TUBE TUBO	TUBETTO TUBO	TUBE BUISJE	SCHLAUCH RØR	195T
2		895-11008		2	WASHER 9 x 16 x 1,6 mm ARANDELA	ROSETTA PIANA ANILHA	RONDELLE SLUITRING	BEILAGSCHEIBE FLADSKIVE	131R
3		827-8035		2	SCREW M8 x 35; 10.9 TORNILLO	VITE PARAFUSO	VIS SCHROEF	SCHRAUBE SKRUE	7450
4		371838A1		2	SPACER SEPARADOR	DISTANZIALE ESPACADOR	ENTRETOISE AFSTANDSRING	DISTANZSTÜCK AFSTANDSSTYKKE	075D
5		372455A1		1	BRACKET PIEZA DE SOPORTE	STAFFA BRACADEIRA	PATTE FIXATION STEUNBEUGEL	HALTERUNG BESLAG	225S
6		19-6258		2	U-BOLT 1/4 in HORQUILLA	CAVALLOTTO MOLA DE ENGATE	CAVALIER VEERKLEM	U-BOLZEN HAARNAAL	P611
7		425-104		4	NUT 1/4 TUERCA	DADO PORCA	ECROU MOER	MUTTER MØTRIK	5780

AIR CONDITIONING - COMPRESSOR MOUNTING
CLIMATIZZATORE - SUPPORTO DEL COMPRESSORE
CLIMATISATION - MONTAGE DU COMPRESSEUR
KLIMAANLAGEN-KOMPRESSORHALTERUNG

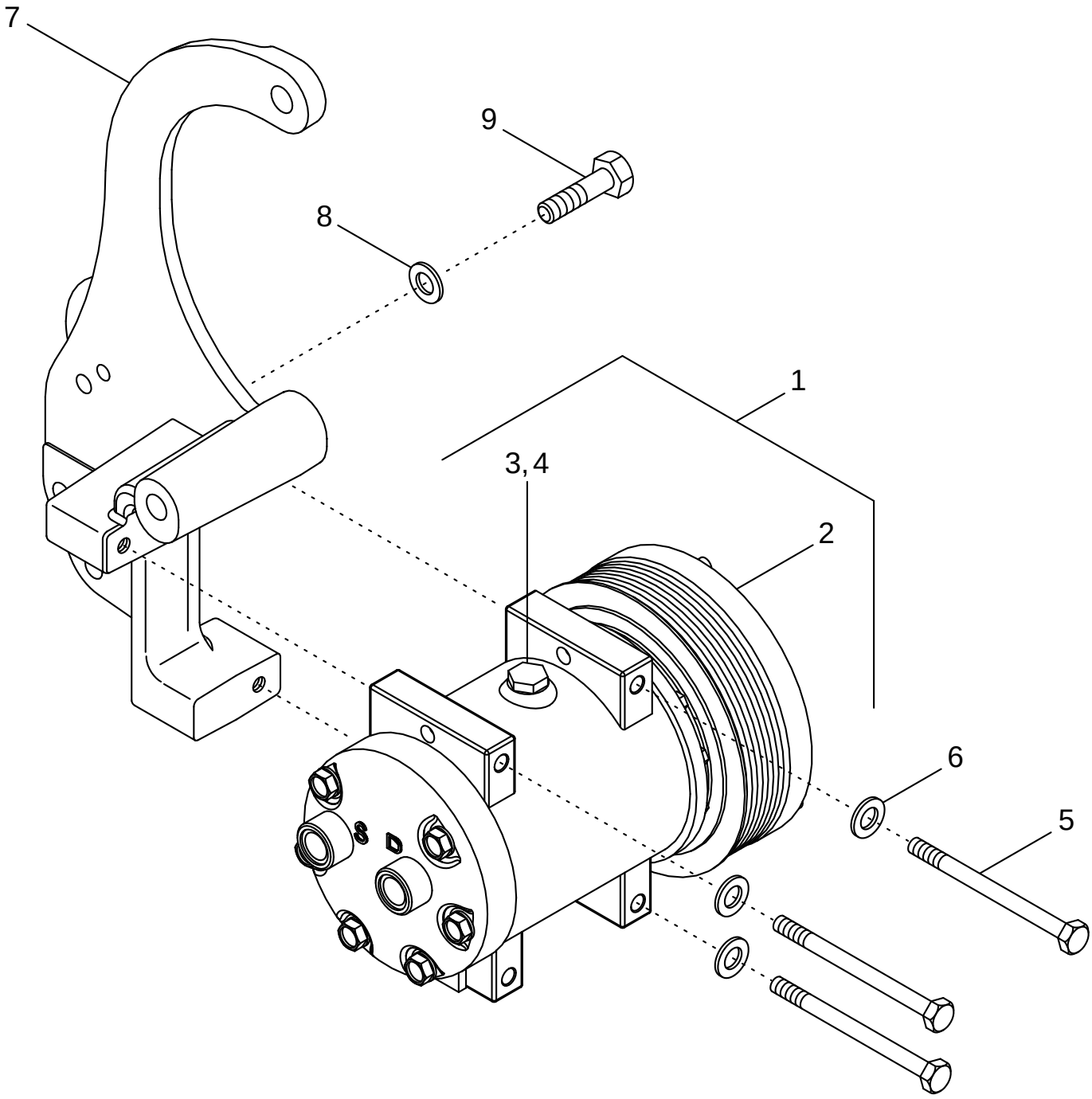

AIRE ACONDICIONADO - MONTAJE DEL COMPRESOR
AR CONDICIONADO - SUPORTE DO COMPRESSOR
AIRCONDITIONING - BEVESTIGING COMPRESSOR
AIRCONDITION - MONTERING AF KOMPRESSOR

R	N	P.N.	MOD	Q	Description Denominacion	Descrizione Denominação	Description Beschrijving	Bezeichnung Beskrivelse	L.C.
1		317008A3		1	COMPRESSOR, AIRCOND Inc. 2 - 4				
						COMPRESSORE CONDI	COMPRESSEUR CLIMAT	KOMPRESSOR, KLIMAA	217C
					COMPRESOR ACOND.	COMPRESSOR AR CON	COMPRESSOR, AIRCON	AIR. CONDIT. KOMPRES	
2		403585A1		1	CLUTCH	FRIZIONE	EMBRAYAGE	KUPPLUNG	095F
					EMBRAGUE	EMBRAIAGEM	KOPPELING	KOBLING	
3		A49667		1	PLUG	TAPPO	BOUCHON	STOPFEN	050T
					TAPÓN	BUJÃO	PLUG	PROP	
4		128483A1		1	O-RING 5/16 ID x 1/16	ANELLO TOROIDALE	JOINT THORIQUE	DICHTRING	055A
					JUNTA HERMETICA	O-RING	O-RING	O-RING	
5		814-8100		3	SCREW M8 x 100	VITE	VIS	SCHRAUBE	P136
					TORNILLO	PARAFUSO	SCHROEF	SKRUE	
6		895-11008		3	WASHER 9 x 16 x 1,6 mm	ROSETTA PIANA	RONDELLE	BEILAGSCHEIBE	131R
					ARANDELA	ANILHA	SLUITRING	FLADSKIVE	
7		394717A4		1	SUPPORT	SUPPORTO	SUPPORT	STÜTZE	300S
					SOPORTE	SUPORTE	STEUN	BESLAG	
8		895-11010		3	WASHER 11 x 20 x 2 mm	ROSETTA PIANA	RONDELLE	SCHEIBE	9720
					ARANDELA	ANILHA	SLUITRING	FLADSKIVE	
9		628-10030		3	SCREW M10 x 30; 10.9	VITE	VIS	SCHRAUBE	7450
					TORNILLO	PARAFUSO	SCHROEF	SKRUE	

09-39		p1	11/04

AIR CONDITIONING - CONDENSER
CLIMATIZZATORE - CONDENSATORE
CLIMATISATION - CONDENSEUR
KONDENSATOR DER KLIMAANLAGE

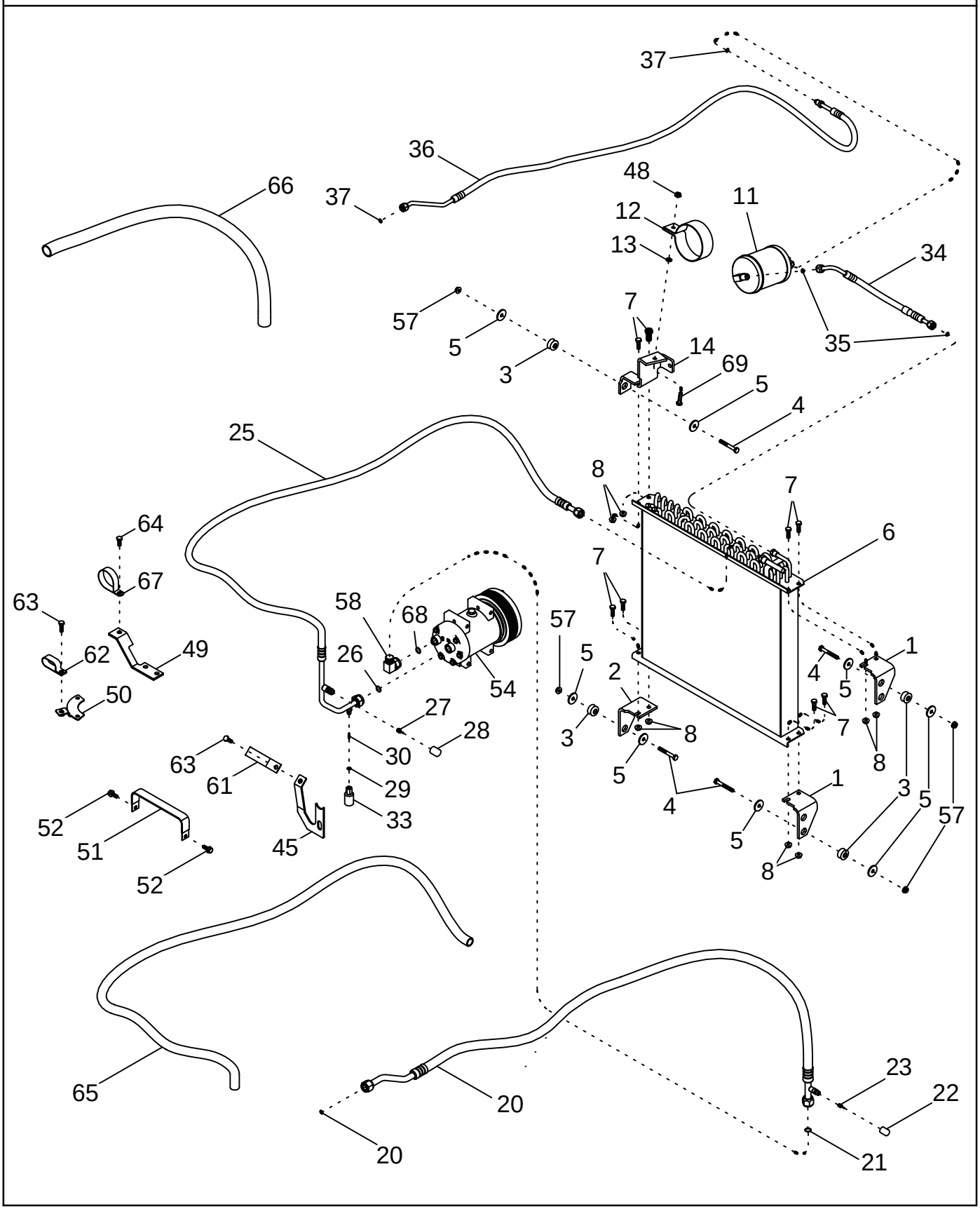

AIRE ACONDICIONADO - CONDENSADOR
CONDENSADOR DO AR CONDICIONADO
AIRCONDITIONING - CONDENSOR
AIRCONDITIONER - KONDENSATOR

R	N	P.N.	MOD	Q	Description Denominacion	Descrizione Denominação	Description Beschrijving	Bezeichnung Beskrivelse	L.C.
1		409965A1		2	BRACKET Right Hand PIEZA DE SOPORTE	STAFFA BRACADEIRA	PATTE FIXATION STEUNBEUGEL	HALTERUNG BESLAG	225S
2		409966A1		1	BRACKET Left Hand PIEZA DE SOPORTE	STAFFA BRACADEIRA	PATTE FIXATION STEUNBEUGEL	HALTERUNG BESLAG	225S
3		434177A1		4	MOUNTING, RUBBER TEJUELO, GOMA	SUPPORTO, DI GOMMA MONTAGEM DE BORRAC	PALIER CAOUTCHOUC MOUNTING, RUBBER	GUMMIHALTERUNG MOUNTING, RUBBER	P777
4		814-8060		4	SCREW M8 x 60; 8.8 TORNILLO	VITE PARAFUSO	VIS SCHROEF	SCHRAUBE SKRUE	040V
5		495-81120		8	WASHER 11/32 x 1-1/4 x 7/64 ARANDELA	ROSETTA PIANA ANILHA	RONDELLE SLUITRING	SCHEIBE FLADSKIVE	9720
6		246841A2		1	CONDENSER CONDENSADOR	CONDENSATORE CONDENSADOR	CONDENSATEUR CONDENSATOR	VERFLÜSSIGER KONDENSATOR	1890
7		844-8025		8	SCREW M8 x 25; 8.8 TORNILLO	VITE PARAFUSO	VIS SCHROEF	SCHRAUBE SKRUE	7450
8		825-2408		8	NUT M8 TUERCA	DADO PORCA	ECROU MOER	MUTTER MØTRIK	5780
11		1990758C2		1	RECEIVER-DRYER RECEPTOR-DESHIDRAT	DISIDRATATORE DESIDRATADOR	RECEVEUR-DÉSHYDRA DROGER	TROCKNER VENDUDSKILLER	058D
12		250965A1		1	CLAMP COLLAR	MORSETTO BRACADEIRA	COLLIER CLAMP	SCHELLE CLAMP	1640
13		829-4408		1	NUT M8 TUERCA	DADO PORCA	ECROU MOER	MUTTER MØTRIK	5780
14		428484A1		1	BRACKET PIEZA DE SOPORTE	STAFFA BRACADEIRA	PATTE FIXATION STEUNBEUGEL	HALTERUNG BESLAG	225S
20		417845A2		1	HOSE ASSY. Inc.21 - 23 MANGUERA (CONJUNTO	GRUPPO TUBO FLESS MANGUEIRA CONJUNTO	FLEXIBLE (ASSEMBLE) HOSE ASSY.	SCHLAUCH (KPLT.) HOSE ASSY.	P457
21		128485A1		2	O-RING 9/16 ID x 1/16 JUNTA HERMETICA	ANELLO TOROIDALE O-RING	JOINT THORIQUE O-RING	DICHTRING O-RING	055A
22		414081A1		1	CAP TAPON DEL DEPOSITO	TAPPO SERBATOIO TAMPAO DE RESERVAT	CHAPEAU RESERVOIRDOP	KAPPE TANKDAEKSEL	052T
23		414083A1		1	CORE NÚCLEO	NUCLEO NÚCLEO	NOYAU STRAALMASSA	KERN KOELERLEGEME	068M
25		446670A1		1	HOSE Inc. 26 - 30 MANGA	MANICOTTO FLESSIBILE TUBO FLEXIVEL	FLEXIBLE FLEXIBELE BUIS	SCHLAUCH SLANGE	030M
26		128485A1		2	O-RING 9/16 ID x 1/16 JUNTA HERMETICA	ANELLO TOROIDALE O-RING	JOINT THORIQUE O-RING	DICHTRING O-RING	055A
27		414082A1		1	CORE NÚCLEO	NUCLEO NÚCLEO	NOYAU STRAALMASSA	KERN KOELERLEGEME	068M
28		414080A1		1	CAP TAPON DEL DEPOSITO	TAPPO SERBATOIO TAMPAO DE RESERVAT	CHAPEAU RESERVOIRDOP	KAPPE TANKDAEKSEL	052T
29		128483A1		1	O-RING 5/16 ID x 1/16 JUNTA HERMETICA	ANELLO TOROIDALE O-RING	JOINT THORIQUE O-RING	DICHTRING O-RING	055A
30		1250594C2		1	CORE NÚCLEO	NUCLEO NÚCLEO	NOYAU STRAALMASSA	KERN KOELERLEGEME	068M
31		128484A1		1	O-RING 7/16 ID x 1/16 JUNTA HERMETICA	ANELLO TOROIDALE O-RING	JOINT THORIQUE O-RING	DICHTRING O-RING	055A
33		284273A2		1	SWITCH CONTACTOR	INTERRUTTORE INTERRUPTOR	CONTACTEUR SCHAKELAAR	SCHALTER KONTAKT	075I

AIR CONDITIONING - CONDENSER
CLIMATIZZATORE - CONDENSATORE
CLIMATISATION - CONDENSEUR
KONDENSATOR DER KLIMAANLAGE

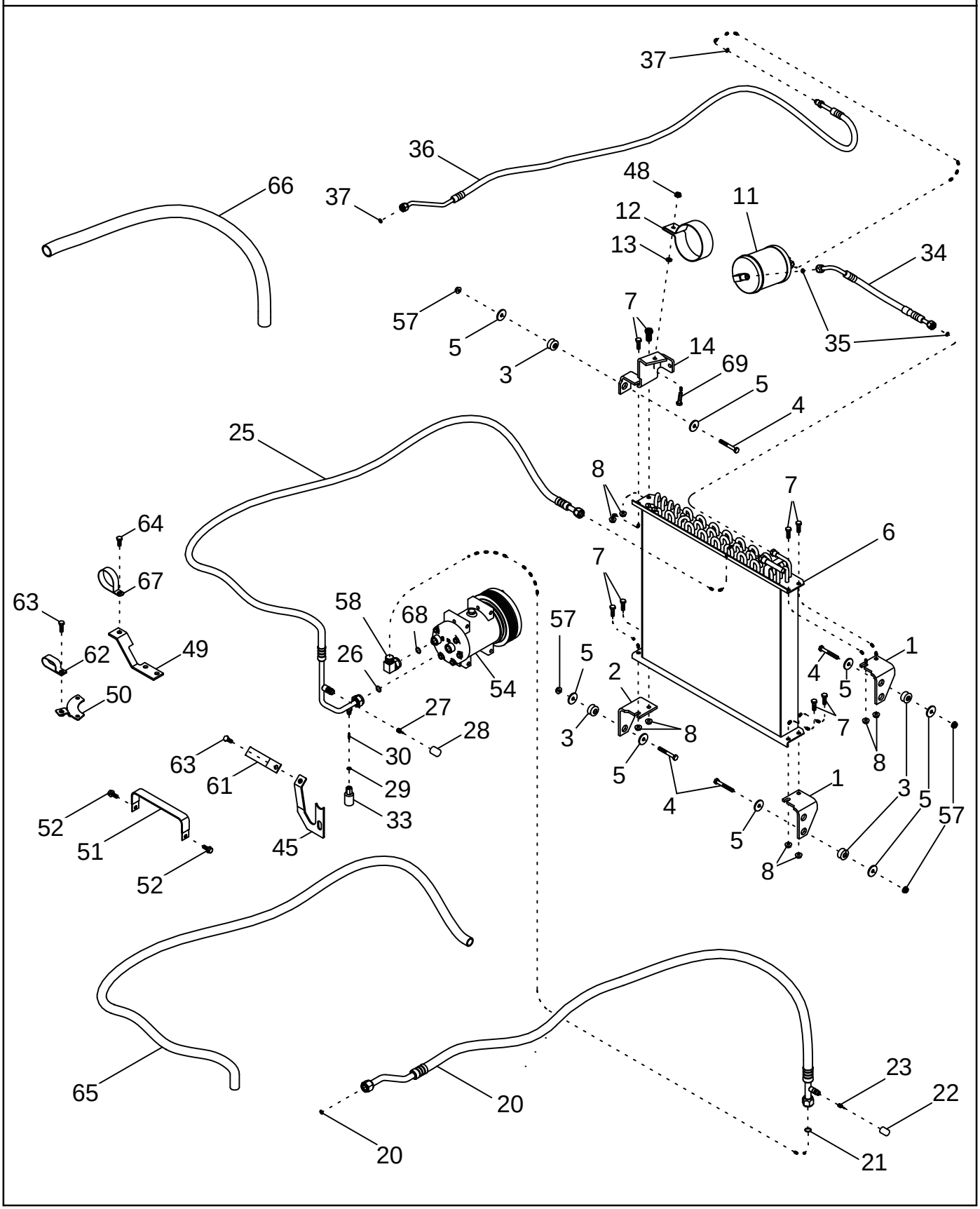

AIRE ACONDICIONADO - CONDENSADOR
CONDENSADOR DO AR CONDICIONADO
AIRCONDITIONING - CONDENSOR
AIRCONDITIONER - KONDENSATOR

R	N	P.N.	MOD	Q	Description Denominacion	Descrizione Denominação	Description Beschrijving	Bezeichnung Beskrivelse	L.C.
34		192929A2		1	HOSE Inc. 35 MANGA	MANICOTTO FLESSIBILE TUBO FLEXIVEL	FLEXIBLE FLEXIBELE BUIS	SCHLAUCHMUFFE SLANGE	4480
35		128483A1		2	O-RING 5/16 ID x 1/16 JUNTA HERMETICA	ANELLO TOROIDALE O-RING	JOINT THORIQUE O-RING	DICHTRING O-RING	055A
36		242323A4		1	HOSE Inc. 37 MANGA	MANICOTTO FLESSIBILE TUBO FLEXIVEL	FLEXIBLE FLEXIBELE BUIS	SCHLAUCH SLANGE	030M
37		128483A1		2	O-RING 5/16 ID x 1/16 JUNTA HERMETICA	ANELLO TOROIDALE O-RING	JOINT THORIQUE O-RING	DICHTRING O-RING	055A
45		414241A1	a	1	BRACKET PIEZA DE SOPORTE	STAFFA BRACADEIRA	PATTE FIXATION STEUNBEUGEL	HALTERUNG BESLAG	225S
45		87437273	b	1	BRACKET PIEZA DE SOPORTE	STAFFA BRACADEIRA	PATTE FIXATION STEUNBEUGEL	HALTERUNG BESLAG	225S
48		825-2408		1	NUT M8 TUERCA	DADO PORCA	ECROU MOER	MUTTER MØTRIK	5780
49		414267A2		1	BRACKET PIEZA DE SOPORTE	STAFFA BRACADEIRA	PATTE FIXATION STEUNBEUGEL	HALTERUNG BESLAG	225S
50		414262A1		1	BRACKET PIEZA DE SOPORTE	STAFFA BRACADEIRA	PATTE FIXATION STEUNBEUGEL	HALTERUNG BESLAG	225S
51		408735A1		1	GUIDE GUIA	GUIDA GUIA	GUIDE GELEIDER	FÜHRUNG STYR	145G
52		844-8020		2	BOLT M8 x 20; 8,8 TORNILLO	BULLONE PARAFUSO	BOULON BOUT	SCHAUBENBOLZEN SKRUE	140B
54	1	317008A3		1	COMPRESSOR, AIRCOND COMPRESOR ACOND.	COMPRESSORE CONDIZ COMPRESSOR AR CONI	COMPRESSEUR CLIMAT COMPRESSOR, AIRCON	KOMPRESSOR, KLIMAAN AIR. CONDIT. KOMPRES	217C
57		825-5148		4	NUT M8; 8 TUERCA	DADO PORCA	ECROU MOER	MUTTER MØTRIK	5780
58		429210A1		1	ELBOW CODO	GOMITO JOELHO	COUDE ELLEBOOG	KNIESTÜCK VINKELROER	085G
59		614-8025		8	SCREW M8 x 25; 8.8 TORNILLO	VITE PARAFUSO	VIS SCHROEF	SCHRAUBE SKRUE	P136
60		825-5148		8	NUT M8; 8 TUERCA	DADO PORCA	ECROU MOER	MUTTER MØTRIK	5780
61		1301387C1		3	CLIP SUJETADOR	FERMAGLIO FIXADOR	CLIP KLEM	KLEMME KLIPS	1700
62		470375C1		1	WIRE, RETAINING HILO	FILO FIO	FIL DRAAD	SICHERUNGSDRAHT SNOR, TRAAD, WIRE	060F
63		614-8025		2	SCREW M8 x 25; 8.8 TORNILLO	VITE PARAFUSO	VIS SCHROEF	SCHRAUBE SKRUE	P136
64		614-8020		2	SCREW M8 x 20; 8.8 TORNILLO	VITE PARAFUSO	VIS SCHROEF	SCHRAUBE SKRUE	P136
65		87403388		1	CONDUIT TUBERIA	CONDOTTA CONDUITE	CONDUIT CONDUIT	LEITUNG RENDE	1920
6		87403389		1	CONDUIT TUBERIA	CONDOTTA CONDUITE	CONDUIT CONDUIT	LEITUNG RENDE	1920

(1) See Figure 09-37
(a) BSN JAZ132841
(b) ASN JAZ132841

09-40		p1	11/04

HEATER SYSTEM
IMPIANTO DI RISCALDAMENTO
SYSTÈME DE CHAUFFAGE
HEIZUNGSANLAGE

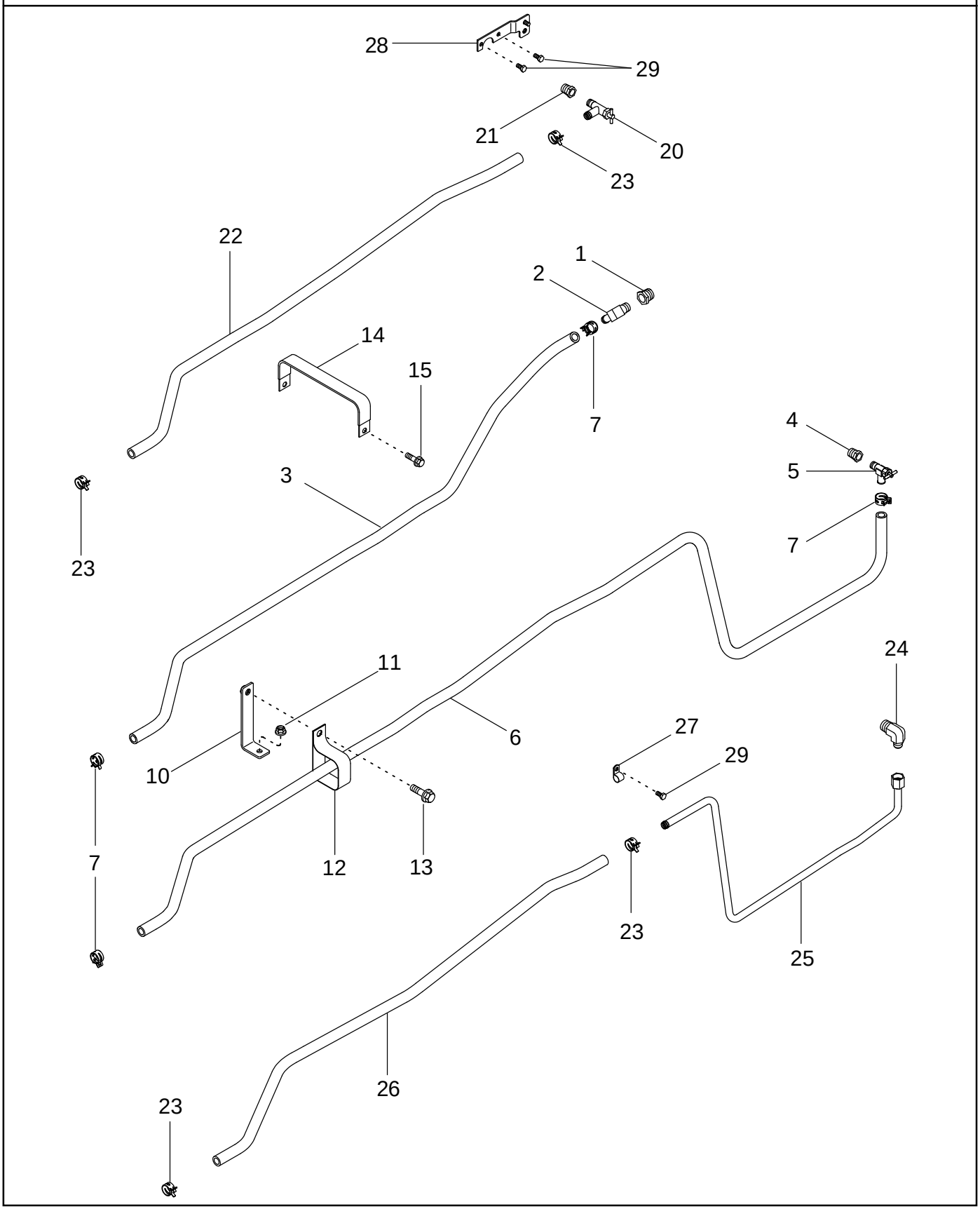

SISTEMA DE CALEFACCIÓN
SISTEMA DE AQUECIMENTO
VERWARMINGSSYSTEEM
VARMESYSTEM

R	N	P.N.	MOD	Q	Description Denominacion	Descrizione Denominação	Description Beschrijving	Bezeichnung Beskrivelse	L.C.
1		217-45		1	ADAPTER 3/4 PT x 1/2 PT ADAPTOR	ADATTATORE ADAPTADOR	ADAPTEUR VERLOOPSTUK	ADAPTER ADAPTER	0031
2		217-134	a	1	FITTING 5/8 stem x 1/2 PT CONEXION	RACCORDO CONEXAO	RACCORD FITTING	ANSCHLUSSSTÜCK FITTING	3300
3		1974656C1	a	1	HOSE Cut From 97252CX MANGA	MANICOTTO FLESSIBILE TUBO FLEXIVEL	FLEXIBLE FLEXIBELE BUIS	SCHLAUCH SLANGE	030M
4		221-1092	a	1	BUSHING 3/4 PT x 3/8 PT CASQUILLO	BOCCOLA CASQUILHO	BAGUE LAGERBUS	BUECHSE BOESNING	095B
5		301803R1	a	1	VALVE, SHUT-OFF VALVULA DE CIERRE	VALVOLA DI ARRESTO VALVULA DE PARADA	VALVE D'ARRET VALVE, SHUT-OFF	ABSPERRVENTIL AFSPÆRRINGSVENTIL	P337
6		1327781C2	a	1	HOSE 2921 mm (115 in), Cut From 97252CX MANGA	MANICOTTO FLESSIBILE TUBO FLEXIVEL	FLEXIBLE FLEXIBELE BUIS	SCHLAUCH SLANGE	030M
7		1954736C1	a	4	CLAMP No. 24 BORNE	MORSETTO BORNE	BRIDE KLEM	KLEMME SPÆNDEBÅND	120M
10		414850A1		1	BRACKET PIEZA DE SOPORTE	STAFFA BRACADEIRA	PATTE FIXATION STEUNBEUGEL	HALTERUNG BESLAG	225S
11		825-2408		1	NUT M8 TUERCA	DADO PORCA	ECROU MOER	MUTTER MØTRIK	5780
12		1301387C2		1	CLIP SUJETADOR	FERMAGLIO FIXADOR	CLIP KLEM	KLEMME KLIPS	1700
13		614-8020		1	SCREW M8 x 20; 8.8 TORNILLO	VITE PARAFUSO	VIS SCHROEF	SCHRAUBE SKRUE	P136
14		408735A1	a	2	GUIDE GUIA	GUIDA GUIA	GUIDE GELEIDER	FÜHRUNG STYR	145G
15		844-8020	a	2	BOLT M8 x 20; 8.8 TORNILLO	BULLONE PARAFUSO	BOULON BOUT	SCHAUBENBOLZEN SKRUE	140B
20		301803R1	b	1	VALVE, SHUT-OFF VALVULA DE CIERRE	VALVOLA DI ARRESTO VALVULA DE PARADA	VALVE D'ARRET VALVE, SHUT-OFF	ABSPERRVENTIL AFSPÆRRINGSVENTIL	P337
21		221-1092	b	1	BUSHING CASQUILLO	BOCCOLA CASQUILHO	BAGUE LAGERBUS	BUECHSE BOESNING	095B
22		1974656C1	b	1	HOSE MANGA	MANICOTTO FLESSIBILE TUBO FLEXIVEL	FLEXIBLE FLEXIBELE BUIS	SCHLAUCH SLANGE	030M
23		1954736C2	b	4	CLAMP COLLAR	MORSETTO BRACADEIRA	COLLIER CLAMP	SCHELLE CLAMP	1640
24		87429524	b	1	ELBOW CODO	GOMITO JOELHO	COUDE ELLEBOOG	KNIESTÜCK VINKELROER	085G
25		87416046	b	1	TUBE ASSY. Steel TUBO (CONJUNTO)	TUBO, COMPLESSIVO TUBO CONJUNTO	TUYAUTERIE TUBE ASSY.	ROHRLEITUNG TUBE ASSY.	P465
25		87439034	b	1	TUBE ASSY. Aluminum TUBO (CONJUNTO)	TUBO, COMPLESSIVO TUBO CONJUNTO	TUYAUTERIE TUBE ASSY.	ROHRLEITUNG TUBE ASSY.	P465
26		1500341C2	b	1	HOSE, LARGE MANGUITO	TUBO FLESSIBILE,GRDE MANGOTE	DURITE HOSE, LARGE	SCHLAUCH, GROSS HOSE, LARGE	Z336
27		515-22159	b	1	CLAMP COLLAR	MORSETTO BRACADEIRA	COLLIER CLAMP	SCHELLE CLAMP	1640
28		87421281	b	1	BRACKET PIEZA DE SOPORTE	STAFFA BRACADEIRA	PATTE FIXATION STEUNBEUGEL	HALTERUNG BESLAG	225S

(a) BSN JAZ130634
(b) ASN JAZ130634

09-40		p2	11/04

HEATER SYSTEM
IMPIANTO DI RISCALDAMENTO
SYSTÈME DE CHAUFFAGE
HEIZUNGSANLAGE

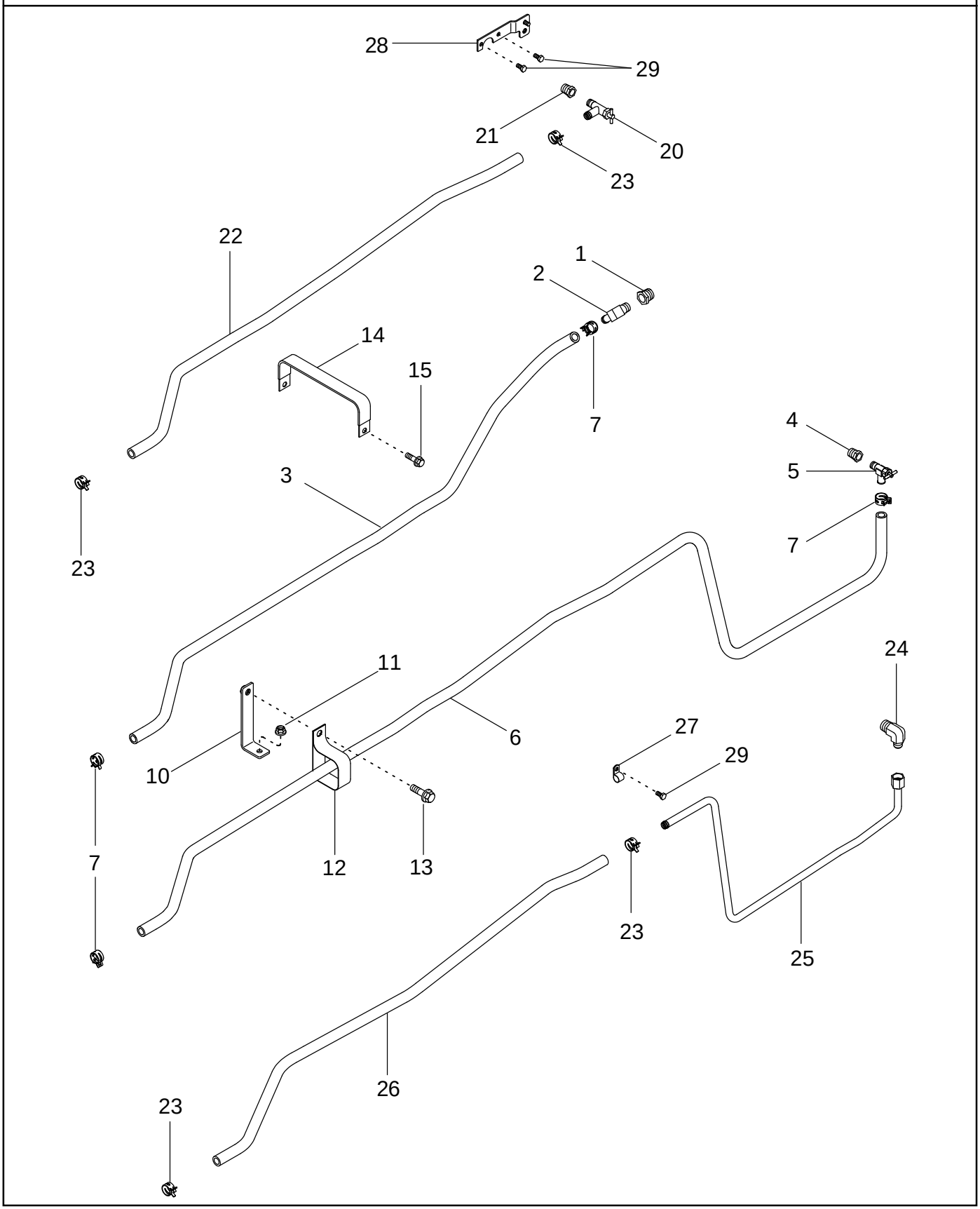

SISTEMA DE CALEFACCIÓN
SISTEMA DE AQUECIMENTO
VERWARMINGSSYSTEEM
VARMESYSTEM

R	N	P.N.	MOD	Q	Description Denominacion	Descrizione Denominação	Description Beschrijving	Bezeichnung Beskrivelse	L.C.
29		**614-8016**	a	3	SCREW M8 16; 8.8 TORNILLO	VITE PARAFUSO	VIS SCHROEF	SCHRAUBE SKRUE	P136

(a) ASN JAZ130634

09-41		p1	11/04

AIR CONDITIONING - CLIMATE CONTROL UNIT, WITHOUT AUTO TEMP CONTROL
CLIMATIZZATORE - UNITÀ DI COMANDO DEL CLIMA, SENZA COMANDO AUTO TEMP
CLIMATISATION – CONTRÔLEUR DE CLIMATISATION, SANS CONTRÔLE AUTOMATIQUE DE LA TEMPÉRATURE
KLIMAANLAGE - CCM OHNE AUTOMATISCHE TEMPERATURREGELUNG

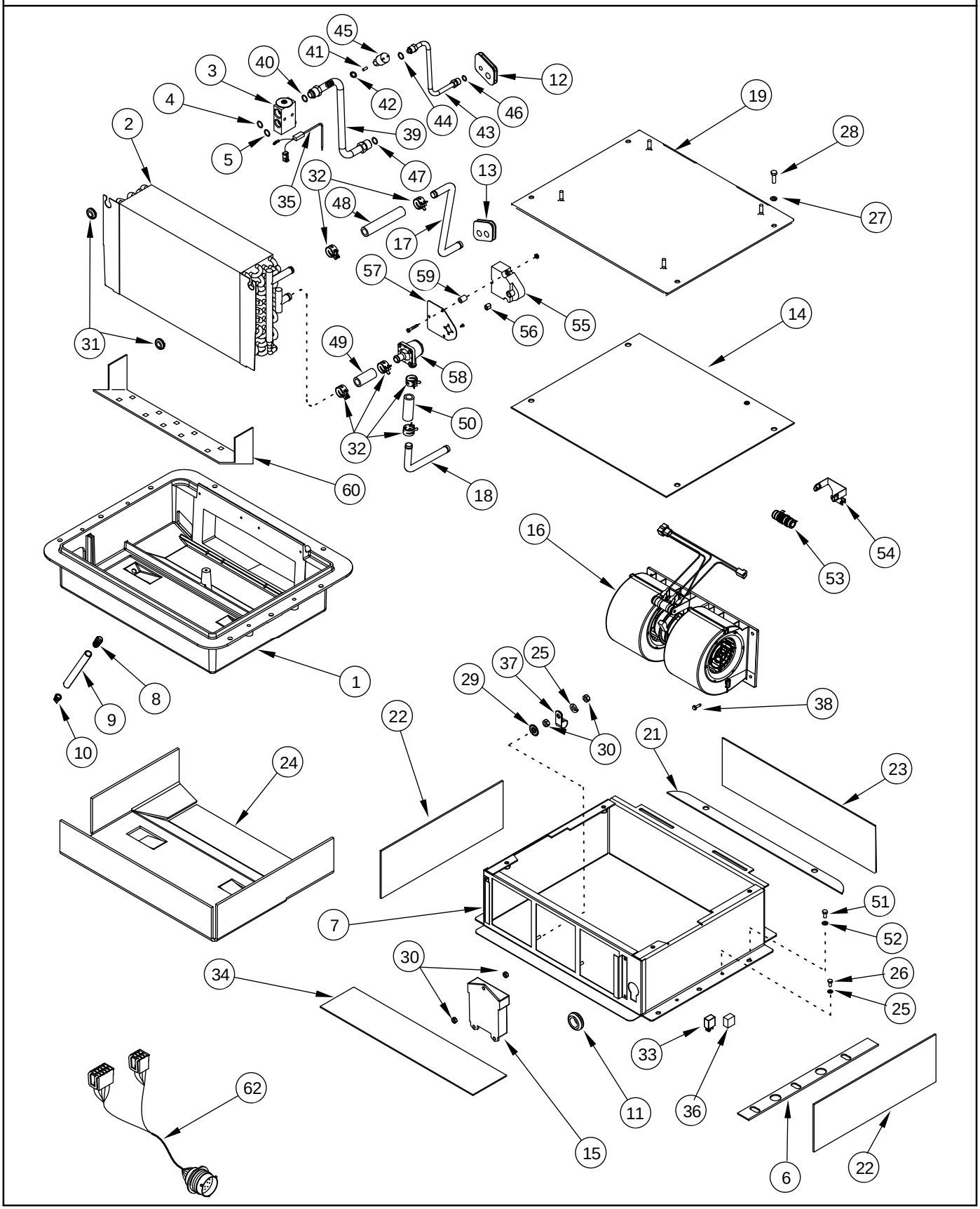

AIRE ACONDICIONADO - UNIDAD DE CONTROL CLIMÁTICO, SIN CONTROL AUTOMÁTICO DE LA TEMPERATURA
AR CONDICIONADO - CLIMATIZADOR, SEM CONTROLO DA TEMPERATURA AUTOMÁTICO
AIRCONDITIONING - KLIMAATBEHEERSINGSEENHEID, ZONDER AUTOM. TEMP.-REGELING
AIRCONDITION - KLIMAKONTROLENHED, UDEN AUTOMATISK TEMPERATURSTYRING

R	N	P.N.	MOD	Q	Description Denominacion	Descrizione Denominação	Description Beschrijving	Bezeichnung Beskrivelse	L.C.
1		322996A1		1	BOX CAJA	SCATOLA CAIXA	BOÎTIER KAST	KISTE KASSE	035S
2		86990263		1	CORE Evaporator And Heater, Inc. 3 - 5 NÚCLEO	NUCLEO NÚCLEO	NOYAU STRAALMASSA	KERN KOELERLEGEME	068M
3		386535A1		1	VALVE VALVULA	VALVOLA VALVULA	SOUPAPE VALVE	VENTIL VALVE	9620
4		128485A1		1	O-RING 9/16 ID x 1/16 JUNTA HERMETICA	ANELLO TOROIDALE O-RING	JOINT THORIQUE O-RING	DICHTRING O-RING	055A
5		128484A1		1	O-RING 7/16 ID x 1/16 JUNTA HERMETICA	ANELLO TOROIDALE O-RING	JOINT THORIQUE O-RING	DICHTRING O-RING	055A
6		322994A1		4	GASKET JUNTA HERMETICA	GUARNIZIONE JUNTA	JOINT DICHTINGSSTUK	DICHTUNG, FLACH PAKNING	123G
7		427242A1		1	BOX CAJA	SCATOLA CAIXA	BOÎTIER KAST	KISTE KASSE	035S
8		1250522C3		2	FITTING CONEXION	RACCORDO CONEXAO	RACCORD FITTING	ANSCHLUSSSTÜCK FITTING	3300
9		1977334C1		2	HOSE 610 mm (24-1/8 in), Cut From 198091C1 MANGA	MANICOTTO FLESSIBILE TUBO FLEXIVEL	FLEXIBLE FLEXIBELE BUIS	SCHLAUCH SLANGE	030M
10		109239C2		2	VALVE VALVULA	VALVOLA VALVULA	SOUPAPE VALVE	VENTIL VALVE	9620
11		248-2381		1	GROMMET 1 ID PASACABLES	ANELLO PASSACAVO CASQUILHO ISOLADOR	PASSE-FIL KABELDOORGANG	TÜLLE RING	4020
12		322989A1		1	GROMMET PASACABLES	ANELLO PASSACAVO CASQUILHO ISOLADOR	PASSE-FIL KABELDOORGANG	TÜLLE RING	131A
13		322990A1		1	GROMMET PASACABLES	ANELLO PASSACAVO CASQUILHO ISOLADOR	PASSE-FIL KABELDOORGANG	TÜLLE RING	131A
14		322992A1		1	GASKET JUNTA HERMETICA	GUARNIZIONE JUNTA	JOINT DICHTINGSSTUK	DICHTUNG, FLACH PAKNING	123G
15		87429903		1	CONTROL MANDO	COMANDO COMANDO	COMMANDE BEDIENING	STEUERUNG KONTROL	189C
		323611A1		1	BLOWER ASSEMBLY, Inc. 16, 53, 54 VENTILADOR IMPELENT	VENTOLA VENTILADOR	VENTILATEUR BLAZER	GEBLÄSE BLÆSER	036V
16		323610A1		1	BLOWER VENTILADOR IMPELENT	VENTOLA VENTILADOR	VENTILATEUR BLAZER	GEBLÄSE BLÆSER	036V
17		322985A1		1	PIPE Outlet CUELLO DE CARGA	TUBO TUBO DE ENCHIMENTO	TUYAU OPVULPIJP	ROHR PAAFYLDNINGSSTUDS	200T
18		322987A1		1	PIPE Inlet CUELLO DE CARGA	TUBO TUBO DE ENCHIMENTO	TUYAU OPVULPIJP	ROHR PAAFYLDNINGSSTUDS	200T
19		323625A1		1	COVER, TOP CONJUNTO TAPA SUPEI	COPERCHIO SUPER. TAMPA SUP. COMPL.	COUVERCLE SUPERIEU HOOFDDEKSEL	ABDECKUNG, OBEN TOPDÆKSEL	266C
21		322995A1		4	GASKET JUNTA HERMETICA	GUARNIZIONE JUNTA	JOINT DICHTINGSSTUK	DICHTUNG, FLACH PAKNING	123G
22		322993A1		2	GASKET JUNTA HERMETICA	GUARNIZIONE JUNTA	JOINT DICHTINGSSTUK	DICHTUNG, FLACH PAKNING	123G
23		322991A1		1	GASKET JUNTA HERMETICA	GUARNIZIONE JUNTA	JOINT DICHTINGSSTUK	DICHTUNG, FLACH PAKNING	123G

09-41		p2	11/04

AIR CONDITIONING - CLIMATE CONTROL UNIT, WITHOUT AUTO TEMP CONTROL
CLIMATIZZATORE - UNITÀ DI COMANDO DEL CLIMA, SENZA COMANDO AUTO TEMP
CLIMATISATION – CONTRÔLEUR DE CLIMATISATION, SANS CONTRÔLE AUTOMATIQUE DE LA TEMPÉRATURE
KLIMAANLAGE - CCM OHNE AUTOMATISCHE TEMPERATURREGELUNG

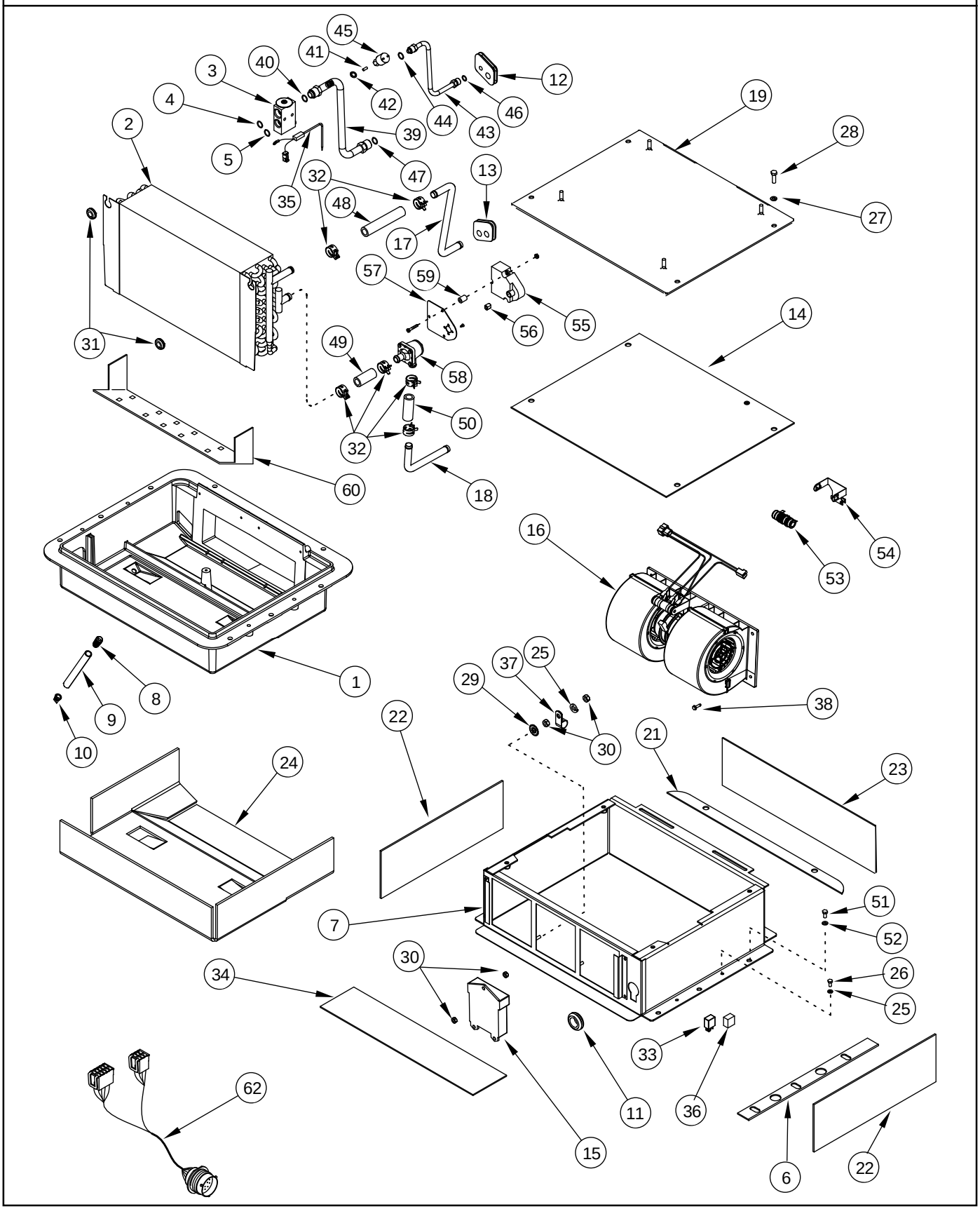

AIRE ACONDICIONADO - UNIDAD DE CONTROL CLIMÁTICO, SIN CONTROL AUTOMÁTICO DE LA TEMPERATURA
AR CONDICIONADO - CLIMATIZADOR, SEM CONTROLO DA TEMPERATURA AUTOMÁTICO
AIRCONDITIONING - KLIMAATBEHEERSINGSEENHEID, ZONDER AUTOM. TEMP.-REGELING
AIRCONDITION - KLIMAKONTROLENHED, UDEN AUTOMATISK TEMPERATURSTYRING

R	N	P.N.	MOD	Q	Description Denominacion	Descrizione Denominação	Description Beschrijving	Bezeichnung Beskrivelse	L.C.
24		324484A1		1	INSULATOR AISLADOR	ISOLANTE ISOLADOR	ISOLANT ISOLATIE,ALGEMEEN	ISOLIERMATERIAL ISOLATOR	085I
25		892-11006		5	WASHER, LOCK M6 ARANDELA DE FRENO	ROSETTA DI SICUREZZA ANILHA DE FIXACAO	RONDELLE FREIN VEERRING	SPRENGRING LAASESKIVE	132R
26		614-6012		4	SCREW M6 x 12; 8,8 TORNILLO	VITE PARAFUSO	VIS SCHROEF	SCHRAUBE SKRUE	7450
27		892-11008		4	WASHER M8 ARANDELA	ROSETTA PIANA ANILHA	RONDELLE SLUITRING	SCHEIBE FLADSKIVE	9720
28		627-8025		4	BOLT M8 x 25; 10.9 TORNILLO	BULLONE PARAFUSO	BOULON BOUT	SCHAUBENBOLZEN SKRUE	140B
29		493-81002		1	WASHER, LOCK 1/4 ARANDELA DE FRENO	ROSETTA DI SICUREZZA ARRUELA	RONDELLE FREIN VEERRING	FEDERRING LAASESKIVE	P264
30		829-1406		4	NUT M6; 10.9 TUERCA	DADO PORCA	ECROU MOER	MUTTER MØTRIK	010D
31		248-1243		2	GROMMET 13/16 dia PASACABLES	ANELLO PASSACAVO CASQUILHO ISOLADOR	PASSE-FIL KABELDOORGANG	TÜLLE RING	4020
32		1954736C1		6	CLAMP No. 24 BORNE	MORSETTO BORNE	BRIDE KLEM	KLEMME SPÆNDEBÅND	120M
33		87414866		1	RELAY 20 Amp CONECTADOR	RELE' CONECTADOR	RELAIS RELAIS	RELAIS RELAE	011R
34		327306A1		1	GASKET JUNTA HERMETICA	GUARNIZIONE JUNTA	JOINT DICHTINGSSTUK	DICHTUNG, FLACH PAKNING	123G
35		323016A1		1	SENSOR SENSOR	SENSORE SENSOR	CAPTEUR SENSOR	SENSOR FØLER	608S
36		327308A1		1	HARNESS HAZ	CABLAGGIO CHICOTE	FAISCEAU HARNESS	KABELSTRANG HARNESS	4160
37		515-21127		1	CLAMP 1/2 ID COLLAR	MORSETTO BRACADEIRA	COLLIER CLAMP	SCHELLE CLAMP	1640
38		281-14512		4	SCREW No. 10 x 3/4 TORNILLO	VITE PARAFUSO	VIS SCHROEF	SCHRAUBE SKRUE	7450
39		322839A1		1	PIPE Inc. 40 - 42 CUELLO DE CARGA	TUBO TUBO DE ENCHIMENTO	TUYAU OPVULPIJP	ROHR PAAFYLDNINGSSTUDS	200T
40		128485A1		1	O-RING 9/16 ID x 1/16 JUNTA HERMETICA	ANELLO TOROIDALE O-RING	JOINT THORIQUE O-RING	DICHTRING O-RING	055A
41		1250594C2		1	CORE NÚCLEO	NUCLEO NÚCLEO	NOYAU STRAALMASSA	KERN KOELERLEGEME	068M
42		128483A1		1	O-RING 5/16 ID x 1/16 JUNTA HERMETICA	ANELLO TOROIDALE O-RING	JOINT THORIQUE O-RING	DICHTRING O-RING	055A
43		322840A1		1	PIPE Inc. 44 CUELLO DE CARGA	TUBO TUBO DE ENCHIMENTO	TUYAU OPVULPIJP	ROHR PAAFYLDNINGSSTUDS	200T
44		128483A1		1	O-RING 5/16 ID x 1/16 JUNTA HERMETICA	ANELLO TOROIDALE O-RING	JOINT THORIQUE O-RING	DICHTRING O-RING	055A
45		284272A3		1	SWITCH, PRESSURE Low Pressure INTERRUPTOR DE PRES	INTERRUTTORE PRESSI INTERRUPTOR DE PRES	PRESSOSTAT DRUKSCHAKELAAR	DRUCKSCHALTER TRYKKONTAKT	079I
46		128484A1		1	O-RING 7/16 ID x 1/16 JUNTA HERMETICA	ANELLO TOROIDALE O-RING	JOINT THORIQUE O-RING	DICHTRING O-RING	055A
47		128485A1		1	O-RING 9/16 ID x 1/16 JUNTA HERMETICA	ANELLO TOROIDALE O-RING	JOINT THORIQUE O-RING	DICHTRING O-RING	055A

09-41		p3	11/04

AIR CONDITIONING - CLIMATE CONTROL UNIT, WITHOUT AUTO TEMP CONTROL
CLIMATIZZATORE - UNITÀ DI COMANDO DEL CLIMA, SENZA COMANDO AUTO TEMP
CLIMATISATION – CONTRÔLEUR DE CLIMATISATION, SANS CONTRÔLE AUTOMATIQUE DE LA TEMPÉRATURE
KLIMAANLAGE - CCM OHNE AUTOMATISCHE TEMPERATURREGELUNG

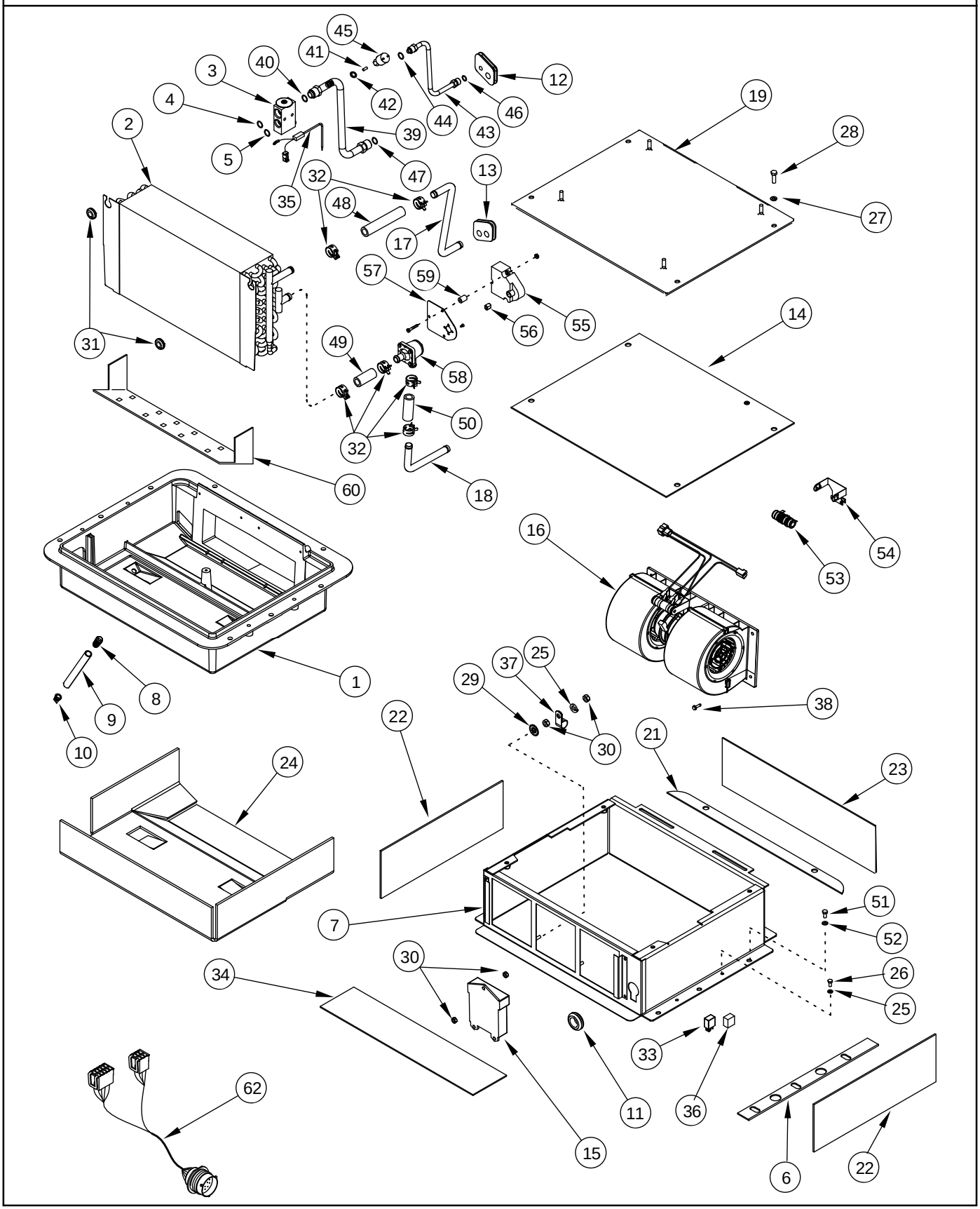

AIRE ACONDICIONADO - UNIDAD DE CONTROL CLIMÁTICO, SIN CONTROL AUTOMÁTICO DE LA TEMPERATURA
AR CONDICIONADO - CLIMATIZADOR, SEM CONTROLO DA TEMPERATURA AUTOMÁTICO
AIRCONDITIONING - KLIMAATBEHEERSINGSEENHEID, ZONDER AUTOM. TEMP.-REGELING
AIRCONDITION - KLIMAKONTROLENHED, UDEN AUTOMATISK TEMPERATURSTYRING

R	N	P.N.	MOD	Q	Description Denominacion	Descrizione Denominação	Description Beschrijving	Bezeichnung Beskrivelse	L.C.
48		1321290C2		1	HOSE 127 mm (5 in), Cut From 97252CX				
						MANICOTTO FLESSIBILE	FLEXIBLE	SCHLAUCH	030M
					MANGA	TUBO FLEXIVEL	FLEXIBELE BUIS	SLANGE	
49		324022A1		1	HOSE 54 mm (2-1/8 in), Cut From 97252CX				
						MANICOTTO FLESSIBILE	FLEXIBLE	SCHLAUCH	030M
					MANGA	TUBO FLEXIVEL	FLEXIBELE BUIS	SLANGE	
50		324023A1		1	HOSE 64 mm (2-1/2 in), Cut From 97252CX				
						MANICOTTO FLESSIBILE	FLEXIBLE	SCHLAUCH	030M
					MANGA	TUBO FLEXIVEL	FLEXIBELE BUIS	SLANGE	
51		781-24825		8	SCREW M8 x 25	VITE	VIS	SCHRAUBE	7450
					TORNILLO	PARAFUSO	SCHROEF	SKRUE	
52		892-11008		8	WASHER M8	ROSETTA PIANA	RONDELLE	SCHEIBE	9720
					ARANDELA	ANILHA	SLUITRING	FLADSKIVE	
53		401360A1		1	RESISTOR	RESISTENZA	RESISTANCE	WIDERSTAND	040R
					RESISTENCIA	RESISTENCIA	WEERSTAND	MODSTAND	
54		360032A1		1	BRACKET	STAFFA	PATTE FIXATION	HALTERUNG	225S
					PIEZA DE SOPORTE	BRACADEIRA	STEUNBEUGEL	BESLAG	
		427356A1		1	VALVE, CONTROL Inc. 55 - 59				
						DISTRIBUTORE	DISTRIBUTEUR	STEUERGERAET	083D
					VALVULA DISTRIBUIDOF	VALVULA DE CONTROLE	KONTROLEKLEP	STYREVENTIL	
55		275602A1		1	MOTOR, ELECTRIC	MOTORE ELETTRICO	MOTEUR ELECTRIQUE	ELEKTROMOTOR	128M
					MOTOR ELECTRICO	MOTOR ELECTRICO	ELEKTRISCHE MOTOR	EL-MOTOR	
56		427360A1		1	INSERT	INSERTO	INSERT	EINSATZ	055I
					INTRODUCTOR	POSTICO	TUSSENSTUK	INDSATS	
57		427353A1		1	PLATE	PIASTRA	PLAQUE	PLATTE	105P
					PLACA	CHAPA	PLAAT	PLADE	
58		427352A1		1	VALVE	VALVOLA	SOUPAPE	VENTIL	9620
					VALVULA	VALVULA	VALVE	VALVE	
59		427354A1		3	SPACER	DISTANZIALE	ENTRETOISE	DISTANZSTÜCK	075D
					SEPARADOR	ESPACADOR	AFSTANDSRING	AFSTANDSSTYKKE	
60		86990266		1	BAFFLE	DEFLETTORE	CHICANE	ABWEISPLATTE	0420
					DEFLECTOR	DEFLETOR	BAFFLE	SKÆRMPLADE	
62		87405664		1	HARNESS	CABLAGGIO	FAISCEAU	KABELSTRANG	4160
					HAZ	CHICOTE	HARNESS	HARNESS	

09-42		p1	11/04

AIR CONDITIONING - CLIMATE CONTROL UNIT, WITH AUTO TEMP CONTROL
CLIMATIZZATORE - UNITÀ DI COMANDO DEL CLIMA, CON COMANDO AUTO TEMP
CLIMATISATION – CONTRÔLEUR DE CLIMATISATION, AVEC CONTRÔLE AUTOMATIQUE DE LA TEMPÉRATURE
KLIMAANLAGE - CCM MIT AUTOMATISCHER TEMPERATURREGELUNG

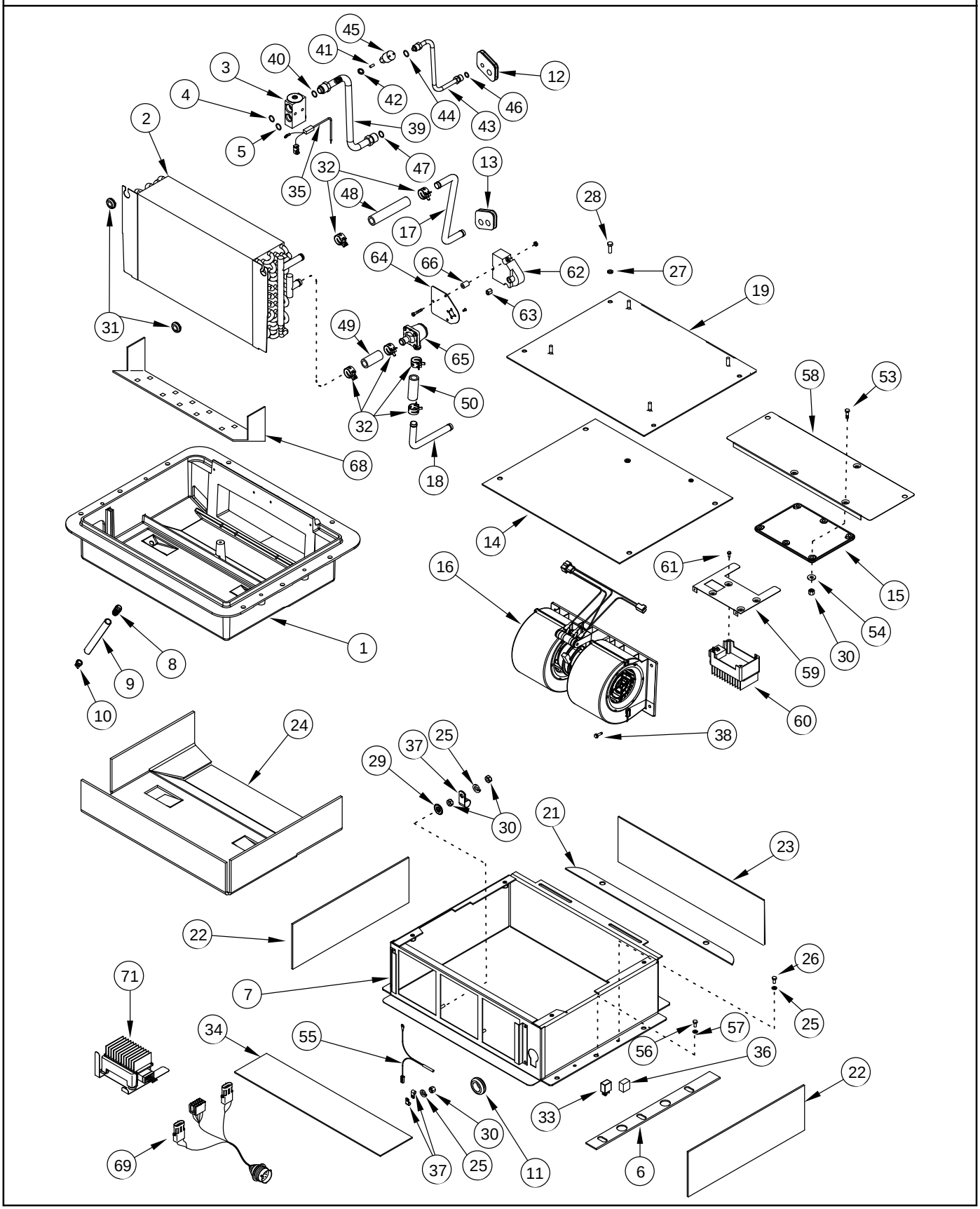

AIRE ACONDICIONADO - UNIDAD DE CONTROL CLIMÁTICO, CON CONTROL AUTOMÁTICO DE LA TEMPERATURA
AR CONDICIONADO - CLIMATIZADOR, COM CONTROLO DA TEMPERATURA AUTOMÁTICO
AIRCONDITIONING - KLIMAATBEHEERSINGSEENHEID, MET AUTOM. TEMP.-REGELING
AIRCONDITION - KLIMAKONTROLENHED, MED AUTOMATISK TEMPERATURSTYRING

R	N	P.N.	MOD	Q	Description Denominacion	Descrizione Denominação	Description Beschrijving	Bezeichnung Beskrivelse	L.C.
1		322996A1		1	BOX CAJA	SCATOLA CAIXA	BOÎTIER KAST	KISTE KASSE	035S
2		86990263		1	CORE Evaporator And Heater, Inc. 3 - 5 NÚCLEO	NUCLEO NÚCLEO	NOYAU STRAALMASSA	KERN KOELERLEGEME	068M
3		386535A1		1	VALVE VALVULA	VALVOLA VALVULA	SOUPAPE VALVE	VENTIL VALVE	9620
4		128485A1		1	O-RING 9/16 ID x 1/16 JUNTA HERMETICA	ANELLO TOROIDALE O-RING	JOINT THORIQUE O-RING	DICHTRING O-RING	055A
5		128484A1		1	O-RING 7/16 ID x 1/16 JUNTA HERMETICA	ANELLO TOROIDALE O-RING	JOINT THORIQUE O-RING	DICHTRING O-RING	055A
6		322994A1		4	GASKET JUNTA HERMETICA	GUARNIZIONE JUNTA	JOINT DICHTINGSSTUK	DICHTUNG, FLACH PAKNING	123G
7		427242A1		1	BOX CAJA	SCATOLA CAIXA	BOÎTIER KAST	KISTE KASSE	035S
8		1250522C3		2	FITTING CONEXION	RACCORDO CONEXAO	RACCORD FITTING	ANSCHLUSSSTÜCK FITTING	3300
9		1977334C1		2	HOSE 610 mm (24-1/8 in), Cut From 198091C1 MANGA	MANICOTTO FLESSIBILE TUBO FLEXIVEL	FLEXIBLE FLEXIBELE BUIS	SCHLAUCH SLANGE	030M
10		109239C2		2	VALVE VALVULA	VALVOLA VALVULA	SOUPAPE VALVE	VENTIL VALVE	9620
11		248-2381		1	GROMMET 1 ID PASACABLES	ANELLO PASSACAVO CASQUILHO ISOLADOR	PASSE-FIL KABELDOORGANG	TÜLLE RING	4020
12		322989A1		1	GROMMET PASACABLES	ANELLO PASSACAVO CASQUILHO ISOLADOR	PASSE-FIL KABELDOORGANG	TÜLLE RING	131A
13		322990A1		1	GROMMET PASACABLES	ANELLO PASSACAVO CASQUILHO ISOLADOR	PASSE-FIL KABELDOORGANG	TÜLLE RING	131A
14		322992A1		1	GASKET JUNTA HERMETICA	GUARNIZIONE JUNTA	JOINT DICHTINGSSTUK	DICHTUNG, FLACH PAKNING	123G
15		87429902		1	CONTROL Module MANDO	COMANDO COMANDO	COMMANDE BEDIENING	STEUERUNG KONTROL	189C
16		323610A1		1	BLOWER VENTILADOR IMPELENT	VENTOLA VENTILADOR	VENTILATEUR BLAZER	GEBLÄSE BLÆSER	036V
17		322985A1		1	PIPE Outlet CUELLO DE CARGA	TUBO TUBO DE ENCHIMENTO	TUYAU OPVULPIJP	ROHR PAAFYLDNINGSSTUDS	200T
18		322987A1		1	PIPE Inlet CUELLO DE CARGA	TUBO TUBO DE ENCHIMENTO	TUYAU OPVULPIJP	ROHR PAAFYLDNINGSSTUDS	200T
19		323625A1		1	COVER, TOP CONJUNTO TAPA SUPEI	COPERCHIO SUPER. TAMPA SUP. COMPL.	COUVERCLE SUPERIEU HOOFDDEKSEL	ABDECKUNG, OBEN TOPDÆKSEL	266C
21		322995A1		4	GASKET JUNTA HERMETICA	GUARNIZIONE JUNTA	JOINT DICHTINGSSTUK	DICHTUNG, FLACH PAKNING	123G
22		322993A1		2	GASKET JUNTA HERMETICA	GUARNIZIONE JUNTA	JOINT DICHTINGSSTUK	DICHTUNG, FLACH PAKNING	123G
23		322991A1		1	GASKET JUNTA HERMETICA	GUARNIZIONE JUNTA	JOINT DICHTINGSSTUK	DICHTUNG, FLACH PAKNING	123G
24		324484A1		1	INSULATOR AISLADOR	ISOLANTE ISOLADOR	ISOLANT ISOLATIE,ALGEMEEN	ISOLIERMATERIAL ISOLATOR	085I

09-42		p2	11/04

AIR CONDITIONING - CLIMATE CONTROL UNIT, WITH AUTO TEMP CONTROL
CLIMATIZZATORE - UNITÀ DI COMANDO DEL CLIMA, CON COMANDO AUTO TEMP
CLIMATISATION – CONTRÔLEUR DE CLIMATISATION, AVEC CONTRÔLE AUTOMATIQUE DE LA TEMPÉRATURE
KLIMAANLAGE - CCM MIT AUTOMATISCHER TEMPERATURREGELUNG

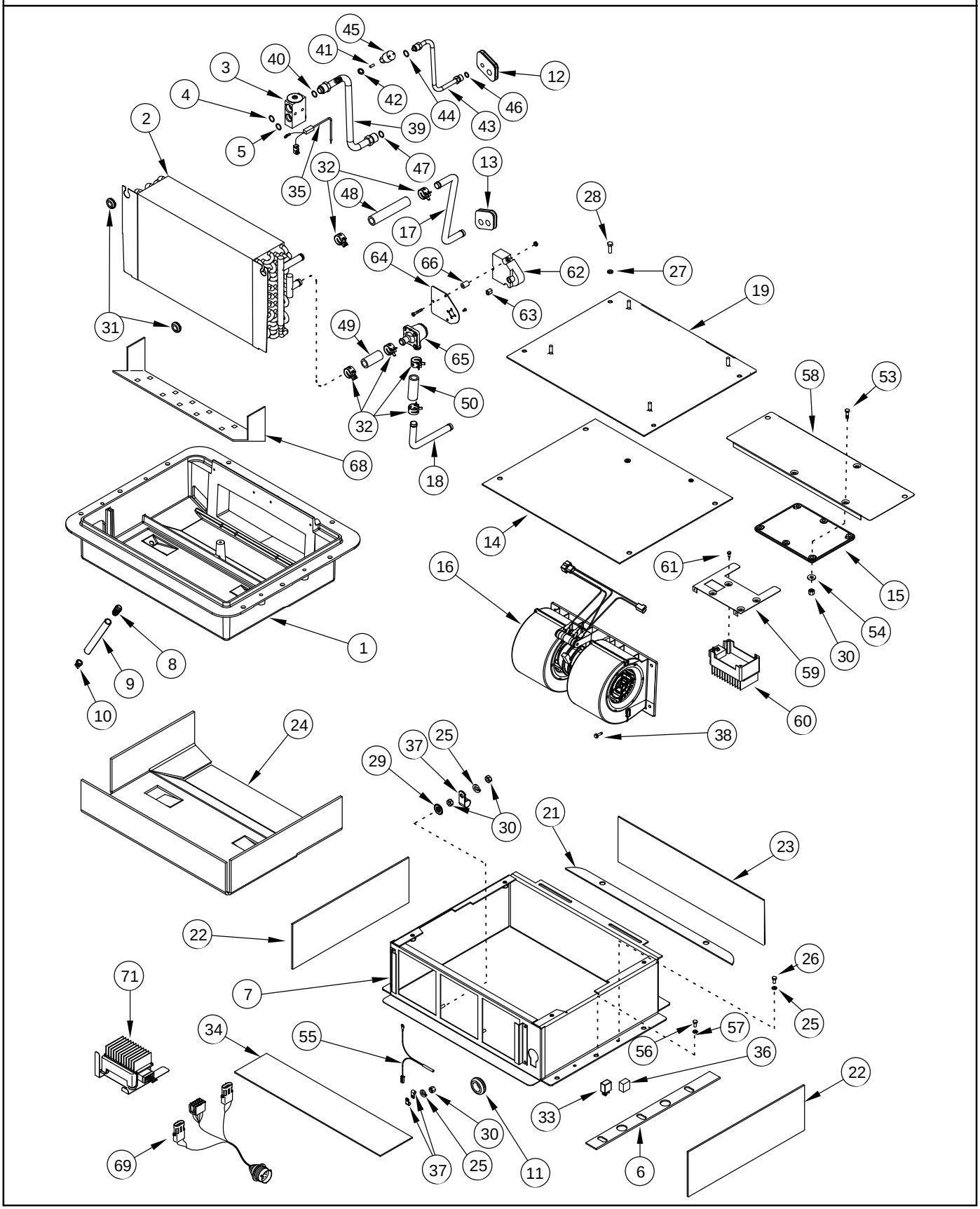

AIRE ACONDICIONADO - UNIDAD DE CONTROL CLIMÁTICO, CON CONTROL AUTOMÁTICO DE LA TEMPERATURA
AR CONDICIONADO - CLIMATIZADOR, COM CONTROLO DA TEMPERATURA AUTOMÁTICO
AIRCONDITIONING - KLIMAATBEHEERSINGSEENHEID, MET AUTOM. TEMP.-REGELING
AIRCONDITION - KLIMAKONTROLENHED, MED AUTOMATISK TEMPERATURSTYRING

R	N	P.N.	MOD	Q	Description Denominacion	Descrizione Denominação	Description Beschrijving	Bezeichnung Beskrivelse	L.C.
25		892-11006		10	WASHER, LOCK M6 ARANDELA DE FRENO	ROSETTA DI SICUREZZA ANILHA DE FIXACAO	RONDELLE FREIN VEERRING	SPRENGRING LAASESKIVE	132R
26		614-6012		4	SCREW M6 x 12; 8,8 TORNILLO	VITE PARAFUSO	VIS SCHROEF	SCHRAUBE SKRUE	7450
27		892-11008		4	WASHER M8 ARANDELA	ROSETTA PIANA ANILHA	RONDELLE SLUITRING	SCHEIBE FLADSKIVE	9720
28		627-8025		4	BOLT M8 x 25; 10.9 TORNILLO	BULLONE PARAFUSO	BOULON BOUT	SCHAUBENBOLZEN SKRUE	140B
29		493-81002		1	WASHER, LOCK 1/4 ARANDELA DE FRENO	ROSETTA DI SICUREZZA ARRUELA	RONDELLE FREIN VEERRING	FEDERRING LAASESKIVE	P264
30		829-1406		6	NUT M6; 10.9 TUERCA	DADO PORCA	ECROU MOER	MUTTER MØTRIK	010D
31		248-1243		2	GROMMET 13/16 dia PASACABLES	ANELLO PASSACAVO CASQUILHO ISOLADOR	PASSE-FIL KABELDOORGANG	TÜLLE RING	4020
32		1954736C1		6	CLAMP No. 24 BORNE	MORSETTO BORNE	BRIDE KLEM	KLEMME SPÆNDEBÅND	120M
33		87414866		1	RELAY 20 Amp CONECTADOR	RELE' CONECTADOR	RELAIS RELAIS	RELAIS RELAE	011R
34		327306A1		1	GASKET JUNTA HERMETICA	GUARNIZIONE JUNTA	JOINT DICHTINGSSTUK	DICHTUNG, FLACH PAKNING	123G
35		323016A1		1	SENSOR SENSOR	SENSORE SENSOR	CAPTEUR SENSOR	SENSOR FØLER	608S
36		397704A1		1	HARNESS, WIRE GRUPO DE CABLES	INSIEME CAVI CABLAGEM	FAISCEAU COMPLET KABELBOOM	KABELSTRANG KPLT KABELNET	070I
37		515-2195		2	CLAMP 3/8 COLLAR	MORSETTO BRACADEIRA	COLLIER CLAMP	SCHELLE CLAMP	1640
38		281-14512		4	SCREW No. 10 x 3/4 TORNILLO	VITE PARAFUSO	VIS SCHROEF	SCHRAUBE SKRUE	7450
39		322839A1		1	PIPE Inc. 40 - 42 CUELLO DE CARGA	TUBO TUBO DE ENCHIMENTO	TUYAU OPVULPIJP	ROHR PAAFYLDNINGSSTUDS	200T
40		128485A1		1	O-RING 9/16 ID x 1/16 JUNTA HERMETICA	ANELLO TOROIDALE O-RING	JOINT THORIQUE O-RING	DICHTRING O-RING	055A
41		1250594C2		1	CORE NÚCLEO	NUCLEO NÚCLEO	NOYAU STRAALMASSA	KERN KOELERLEGEME	068M
42		128483A1		1	O-RING 5/16 ID x 1/16 JUNTA HERMETICA	ANELLO TOROIDALE O-RING	JOINT THORIQUE O-RING	DICHTRING O-RING	055A
43		322840A1		1	PIPE Inc. 44 CUELLO DE CARGA	TUBO TUBO DE ENCHIMENTO	TUYAU OPVULPIJP	ROHR PAAFYLDNINGSSTUDS	200T
44		128483A1		1	O-RING 5/16 ID x 1/16 JUNTA HERMETICA	ANELLO TOROIDALE O-RING	JOINT THORIQUE O-RING	DICHTRING O-RING	055A
45		284272A3		1	SWITCH, PRESSURE Low Pressure INTERRUPTOR DE PRES	INTERRUTTORE PRESSI INTERRUPTOR DE PRES	PRESSOSTAT DRUKSCHAKELAAR	DRUCKSCHALTER TRYKKONTAKT	079I
46		128484A1		1	O-RING 7/16 ID x 1/16 JUNTA HERMETICA	ANELLO TOROIDALE O-RING	JOINT THORIQUE O-RING	DICHTRING O-RING	055A
47		128485A1		1	O-RING 9/16 ID x 1/16 JUNTA HERMETICA	ANELLO TOROIDALE O-RING	JOINT THORIQUE O-RING	DICHTRING O-RING	055A

09-42		p3	11/04

AIR CONDITIONING - CLIMATE CONTROL UNIT, WITH AUTO TEMP CONTROL
CLIMATIZZATORE - UNITÀ DI COMANDO DEL CLIMA, CON COMANDO AUTO TEMP
CLIMATISATION – CONTRÔLEUR DE CLIMATISATION, AVEC CONTRÔLE AUTOMATIQUE DE LA TEMPÉRATURE
KLIMAANLAGE - CCM MIT AUTOMATISCHER TEMPERATURREGELUNG

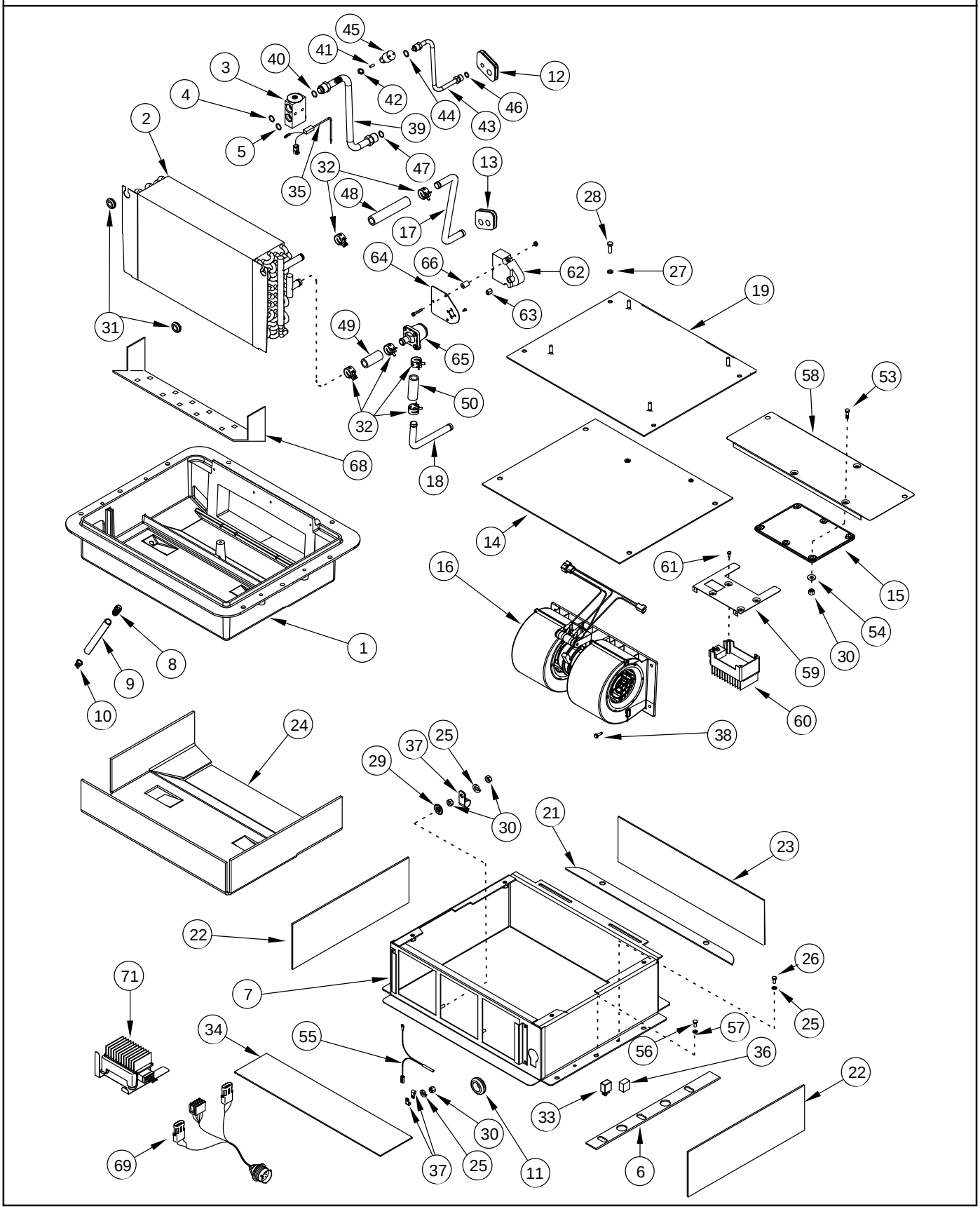

AIRE ACONDICIONADO - UNIDAD DE CONTROL CLIMÁTICO, CON CONTROL AUTOMÁTICO DE LA TEMPERATURA
AR CONDICIONADO - CLIMATIZADOR, COM CONTROLO DA TEMPERATURA AUTOMÁTICO
AIRCONDITIONING - KLIMAATBEHEERSINGSEENHEID, MET AUTOM. TEMP.-REGELING
AIRCONDITION - KLIMAKONTROLENHED, MED AUTOMATISK TEMPERATURSTYRING

R	N	P.N.	MOD	Q	Description Denominacion	Descrizione Denominação	Description Beschrijving	Bezeichnung Beskrivelse	L.C.
48		1321290C2		1	HOSE 127 mm (5 in), Cut From 97252CX				
						MANICOTTO FLESSIBILE	FLEXIBLE	SCHLAUCH	030M
					MANGA	TUBO FLEXIVEL	FLEXIBELE BUIS	SLANGE	
49		324022A1		1	HOSE 54 mm (2-1/8 in), Cut From 97252CX				
						MANICOTTO FLESSIBILE	FLEXIBLE	SCHLAUCH	030M
					MANGA	TUBO FLEXIVEL	FLEXIBELE BUIS	SLANGE	
					With Auto Temp Control				
50		324023A1		1	HOSE 64 mm (2-1/2 in), Cut From 97252CX				
						MANICOTTO FLESSIBILE	FLEXIBLE	SCHLAUCH	030M
					MANGA	TUBO FLEXIVEL	FLEXIBELE BUIS	SLANGE	
53		614-6020		3	BOLT M6 x 20; 8,8	BULLONE	BOULON	SCHAUBENBOLZEN	140B
					TORNILLO	PARAFUSO	BOUT	SKRUE	
54		895-11006		3	WASHER 6,6 x 12 x 1,6 mm	ROSETTA PIANA	RONDELLE	BEILAGSCHEIBE	131R
					ARANDELA	ANILHA	SLUITRING	FLADSKIVE	
55		323016A1		1	SENSOR Return Air	SENSORE	CAPTEUR	SENSOR	608S
					SENSOR	SENSOR	SENSOR	FØLER	
56		781-24825		8	SCREW M8 x 25	VITE	VIS	SCHRAUBE	7450
					TORNILLO	PARAFUSO	SCHROEF	SKRUE	
57		892-11008		8	WASHER M8	ROSETTA PIANA	RONDELLE	SCHEIBE	9720
					ARANDELA	ANILHA	SLUITRING	FLADSKIVE	
58		397702A1		1	BRACKET	STAFFA	PATTE FIXATION	HALTERUNG	225S
					PIEZA DE SOPORTE	BRACADEIRA	STEUNBEUGEL	BESLAG	
		397780A1		1	CONTROL Inc. 59 - 61	COMANDO	COMMANDE	STEUERUNG	189C
					MANDO	COMANDO	BEDIENING	KONTROL	
59		397703A1		1	BRACKET	STAFFA	PATTE FIXATION	HALTERUNG	225S
					PIEZA DE SOPORTE	BRACADEIRA	STEUNBEUGEL	BESLAG	
60		393289A1		1	ELECTRONIC UNIT, CONTROL				
						CENTRALINA ELETTRON	BOITIER ELECTRONIQUI	ELEKTRONIKBOX	655C
					CAJA ELECTRONICA	UNID.CONTROLE ELECT	ELECTRONISCHE KAST	ELEKTRONIKBOKS	
61		280-1448		4	SCREW No 8 x 1/2	VITE	VIS	SCHRAUBE	7450
					TORNILLO	PARAFUSO	SCHROEF	SKRUE	
		427356A1		1	VALVE, CONTROL Inc. 62 - 66				
						DISTRIBUTORE	DISTRIBUTEUR	STEUERGERAET	083D
					VALVULA DISTRIBUIDOF	VALVULA DE CONTROLE	KONTROLEKLEP	STYREVENTIL	
62		275602A1		1	MOTOR, ELECTRIC	MOTORE ELETTRICO	MOTEUR ELECTRIQUE	ELEKTROMOTOR	128M
					MOTOR ELECTRICO	MOTOR ELECTRICO	ELEKTRISCHE MOTOR	EL-MOTOR	
63		427360A1		1	INSERT	INSERTO	INSERT	EINSATZ	055I
					INTRODUCTOR	POSTICO	TUSSENSTUK	INDSATS	
64		427353A1		1	PLATE	PIASTRA	PLAQUE	PLATTE	105P
					PLACA	CHAPA	PLAAT	PLADE	
65		427352A1		1	VALVE	VALVOLA	SOUPAPE	VENTIL	9620
					VALVULA	VALVULA	VALVE	VALVE	
66		427354A1		3	SPACER	DISTANZIALE	ENTRETOISE	DISTANZSTÜCK	075D
					SEPARADOR	ESPACADOR	AFSTANDSRING	AFSTANDSSTYKKE	
68		86990266		1	BAFFLE	DEFLETTORE	CHICANE	ABWEISPLATTE	0420
					DEFLECTOR	DEFLETOR	BAFFLE	SKÆRMPLADE	
69		86990663		1	HARNESS	CABLAGGIO	FAISCEAU	KABELSTRANG	4160
					HAZ	CHICOTE	HARNESS	HARNESS	

09-42		p4	11/04

AIR CONDITIONING - CLIMATE CONTROL UNIT, WITH AUTO TEMP CONTROL
CLIMATIZZATORE - UNITÀ DI COMANDO DEL CLIMA, CON COMANDO AUTO TEMP
CLIMATISATION – CONTRÔLEUR DE CLIMATISATION, AVEC CONTRÔLE AUTOMATIQUE DE LA TEMPÉRATURE
KLIMAANLAGE - CCM MIT AUTOMATISCHER TEMPERATURREGELUNG

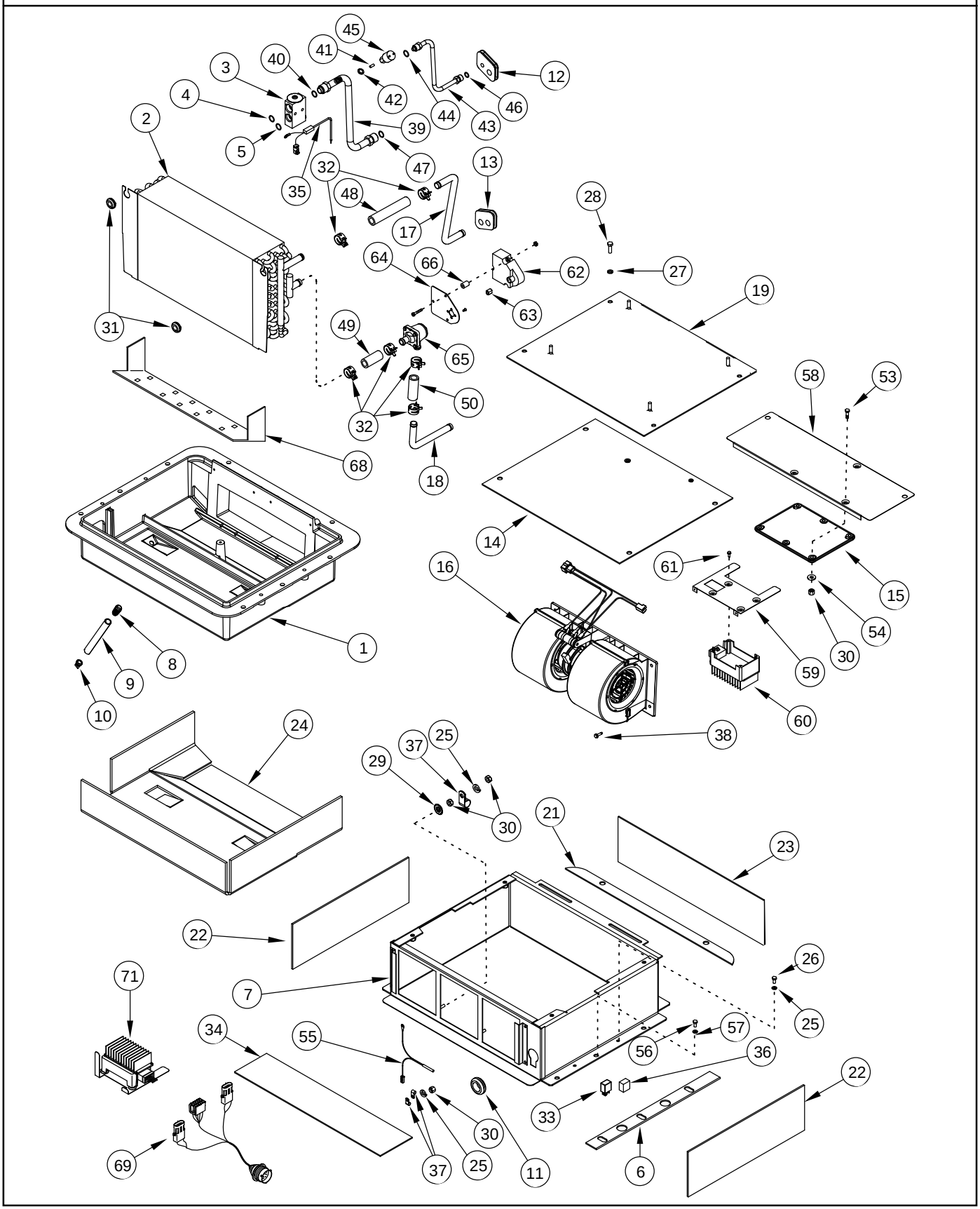

AIRE ACONDICIONADO - UNIDAD DE CONTROL CLIMÁTICO, CON CONTROL AUTOMÁTICO DE LA TEMPERATURA
AR CONDICIONADO - CLIMATIZADOR, COM CONTROLO DA TEMPERATURA AUTOMÁTICO
AIRCONDITIONING - KLIMAATBEHEERSINGSEENHEID, MET AUTOM. TEMP.-REGELING
AIRCONDITION - KLIMAKONTROLENHED, MED AUTOMATISK TEMPERATURSTYRING

R	N	P.N.	MOD	Q	Description Denominacion	Descrizione Denominação	Description Beschrijving	Bezeichnung Beskrivelse	L.C.
70		**394957A1**		1	KIT ATC Capacitor Filter (Not Shown)				
						KIT	POCHETTE	PACKUNG	4830
					JEUGO	JOGO	KIT	KIT	
71		**398101A1**		1	KIT ATC Filter Linear Driver	KIT	POCHETTE	PACKUNG	4830
					JEUGO	JOGO	KIT	KIT	

09-43		p1	11/04

AIR CONDITIONING - AIR FILTER
CLIMATIZZATORE - FILTRO DELL'ARIA
CLIMATISATION - FILTRE À AIR
KLIMAANLAGEN-LUFTFILTER

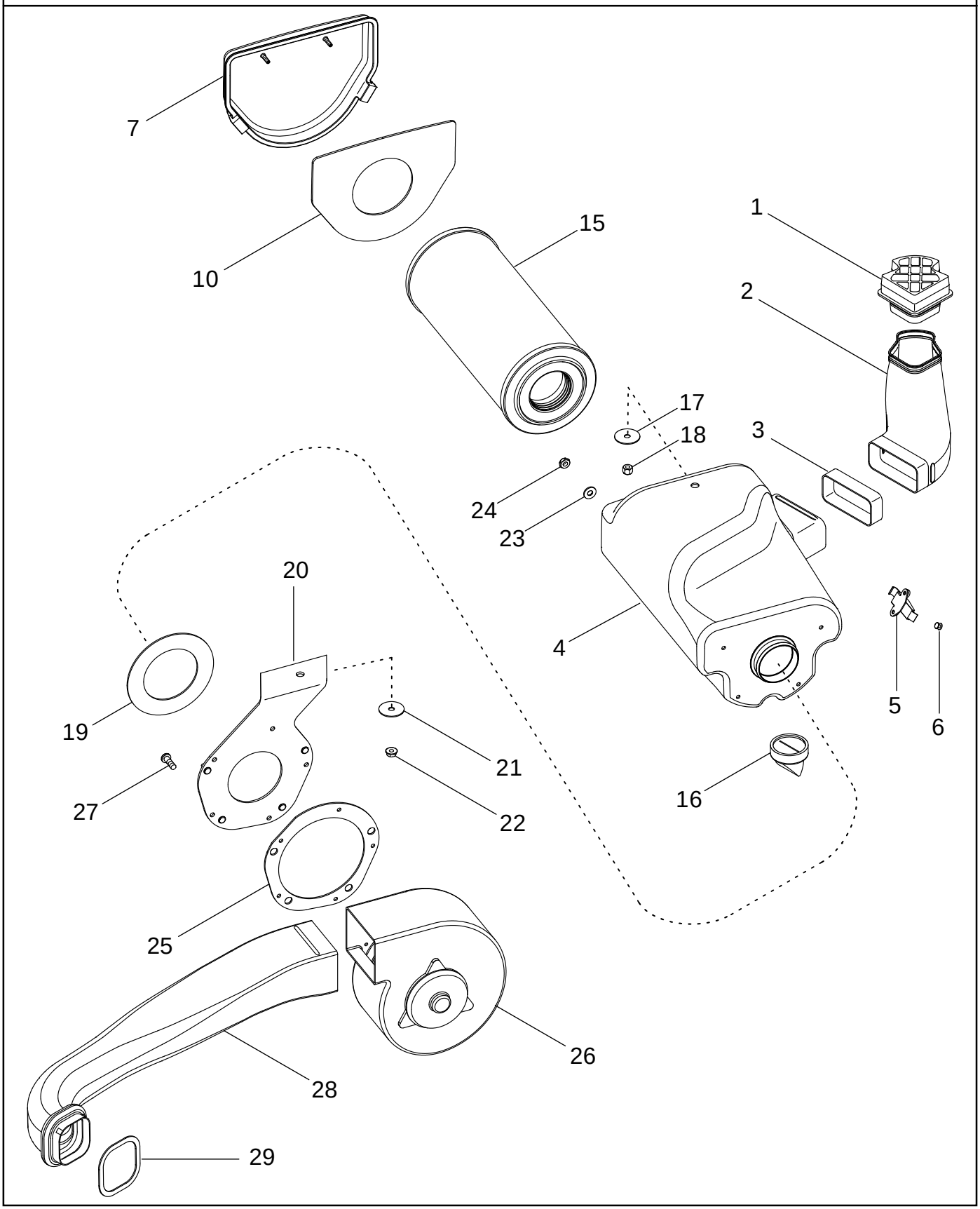

AIRE ACONDICIONADO - FILTRO DE AIRE
FILTRO DE AR DO AR CONDICIONADO
AIRCONDITIONING - LUCHTFILTER
AIRCONDITION - LUFTFILTER

R	N	P.N.	MOD	Q	Description Denominacion	Descrizione Denominação	Description Beschrijving	Bezeichnung Beskrivelse	L.C.
1		255236A3		1	GROMMET PASACABLES	ANELLO PASSACAVO CASQUILHO ISOLADOR	PASSE-FIL KABELDOORGANG	TÜLLE RING	131A
2		255237A2		1	DUCT, AIR CONDUCTO DE AIRE	CONDOTTO ARIA CONDUTA DE AR	CONDUIT D'AIR LUCHTLEIDING	LUFTLEITUNG LUFTKANAL	224C
3		280951A2		1	SEAL ANILLO DE CIERRE	ANELLO DI TENUTA ANEL DE VEDACAO	JOINT DICHTINGSRING	DICHTUNG PAKNINGSRING	132A
		310687A3		1	FILTER, CAB Inc. 4 - 10 FILTRO, CABINA	FILTRO ARIA CABINA FILTRO, CABINA	FILTRE A AIR CABINE FILTER, CABINE	KABINENFILTER FILTER, CABINE	063F
4		NSS		1	NOT SERVICED SEPARATELY Housing NO SE REPARA SEPARA	NON FORNITO SEPARAT NOT SERVICED SEPARA	NON FOURNI SEPAREMI NIET ALLEEN VERKRIJG	KEIN ERSATZTEIL NOT SERVICED SEPARA	064N
5		240748A2		2	LATCH PESTILLO	CHIAVISTELLO TRINCO	LOQUET KLINK	KLINKE PAL	156C
6		151-539		4	RIVET Pop, 3/16 x 7/16 REMACHE	RIBATTINO REBITE	RIVET KLINKNAGEL	NIET NITTE	7220
7		255218A4		1	COVER Inc. 10 TAPADERA	COPERCHIO COBERTA	COUVERCLE DEKSEL	DECKEL DÆKSEL	265C
10		259339A3		1	GASKET JUNTA HERMETICA	GUARNIZIONE JUNTA	JOINT DICHTINGSSTUK	DICHTUNG, FLACH PAKNING	123G
15		259288A1		1	FILTER Air FILTRO	FILTRO FILTRO	FILTRE FILTER	FILTER FILTER	3240
16		A184597		1	POPPET, VALVE VÁLVULA DE PASO	VALVOLA A FUNGO VALVULA	CLAPET POPPET, VALVE	VENTILKEGEL DOKVENTIL	P048
17		495-81121		1	WASHER 11/32 x 1-1/2 x 1/16 ARANDELA	ROSETTA PIANA ANILHA	RONDELLE SLUITRING	SCHEIBE FLADSKIVE	9720
18		832-10408		1	NUT M8; 8 TUERCA	DADO PORCA	ECROU MOER	MUTTER MØTRIK	010D
19		255219A2		1	GASKET JUNTA HERMETICA	GUARNIZIONE JUNTA	JOINT DICHTINGSSTUK	DICHTUNG, FLACH PAKNING	123G
20		252244A2		1	BRACKET PIEZA DE SOPORTE	STAFFA BRACADEIRA	PATTE FIXATION STEUNBEUGEL	HALTERUNG BESLAG	225S
21		495-81121		1	WASHER 11/32 x 1-1/2 x 1/16 ARANDELA	ROSETTA PIANA ANILHA	RONDELLE SLUITRING	SCHEIBE FLADSKIVE	9720
22		825-2408		1	NUT M8 TUERCA	DADO PORCA	ECROU MOER	MUTTER MØTRIK	5780
23		495-31022		4	WASHER 7/32 x 1/2 x 3/64 ARANDELA	ROSETTA PIANA ANILHA	RONDELLE SLUITRING	SCHEIBE FLADSKIVE	9720
24		225-14210		4	NUT No. 10 NF TUERCA	DADO PORCA	ECROU MOER	MUTTER MØTRIK	5780
25		255220A2		1	GASKET JUNTA HERMETICA	GUARNIZIONE JUNTA	JOINT DICHTINGSSTUK	DICHTUNG, FLACH PAKNING	123G
26		330137A1		1	BLOWER VENTILADOR IMPELENT	VENTOLA VENTILADOR	VENTILATEUR BLAZER	GEBLÄSE BLÆSER	036V
27		490-11010		5	SCREW No. 10 NF x 5/8 TORNILLO	VITE PARAFUSO	VIS SCHROEF	SCHRAUBE SKRUE	7450
28		255295A3		1	DUCT CONDUCTO	CONDOTTO COLECTOR	CONDUIT LEIDING	KANAL KANAL	223C

AIR CONDITIONING - AIR FILTER
CLIMATIZZATORE - FILTRO DELL'ARIA
CLIMATISATION - FILTRE À AIR
KLIMAANLAGEN-LUFTFILTER

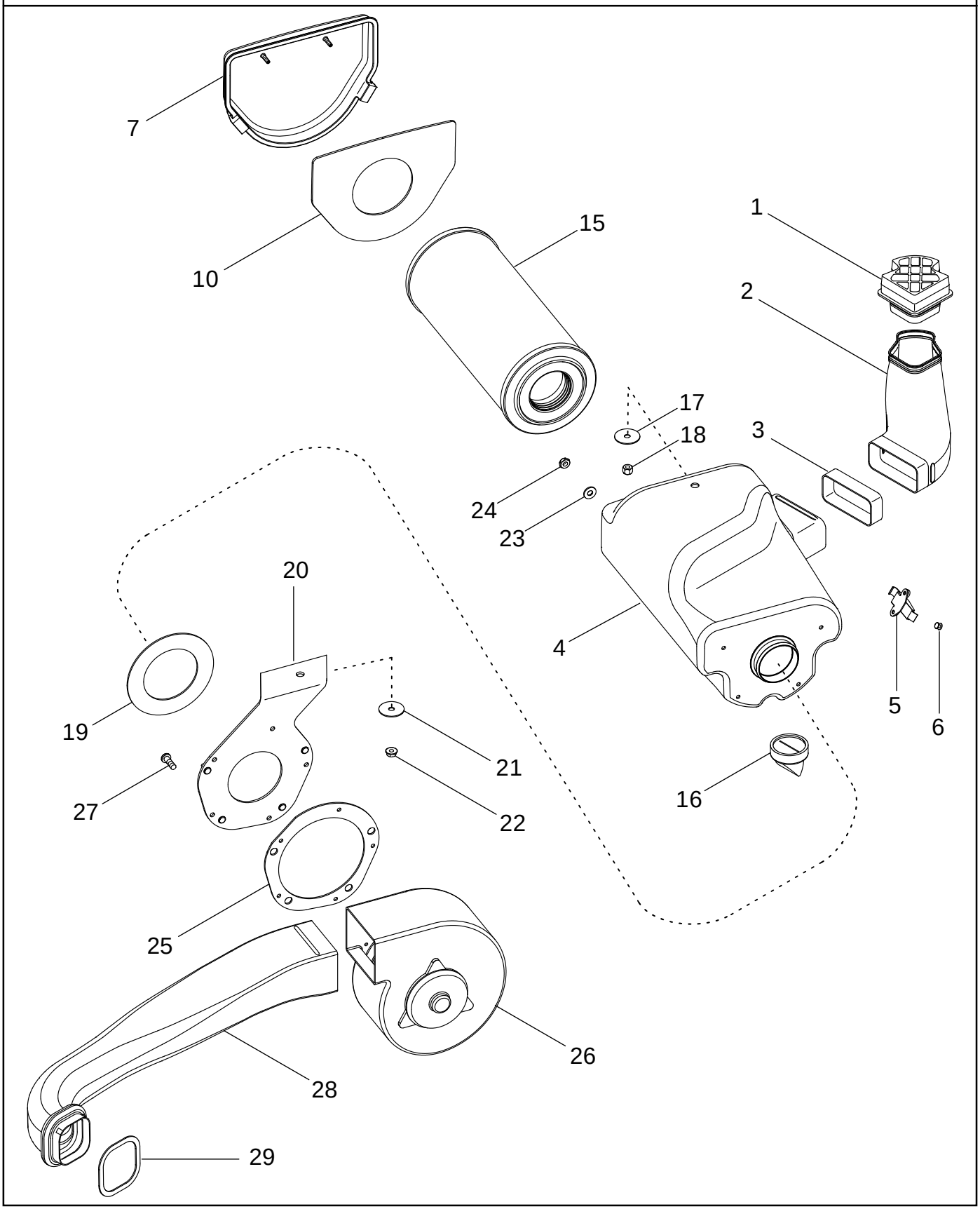

AIRE ACONDICIONADO - FILTRO DE AIRE
FILTRO DE AR DO AR CONDICIONADO
AIRCONDITIONING - LUCHTFILTER
AIRCONDITION - LUFTFILTER

R	N	P.N.	MOD	Q	Description Denominacion	Descrizione Denominação	Description Beschrijving	Bezeichnung Beskrivelse	L.C.
29		280510A2		1	GASKET JUNTA HERMETICA	GUARNIZIONE JUNTA	JOINT DICHTINGSSTUK	DICHTUNG, FLACH PAKNING	123G

09-44		p1	11/04

AIR CONDITIONING - DUCTS
CLIMATIZZATORE - CONDOTTI
CLIMATISATION - CONDUITES
KLIMAANLAGENLEITUNGEN

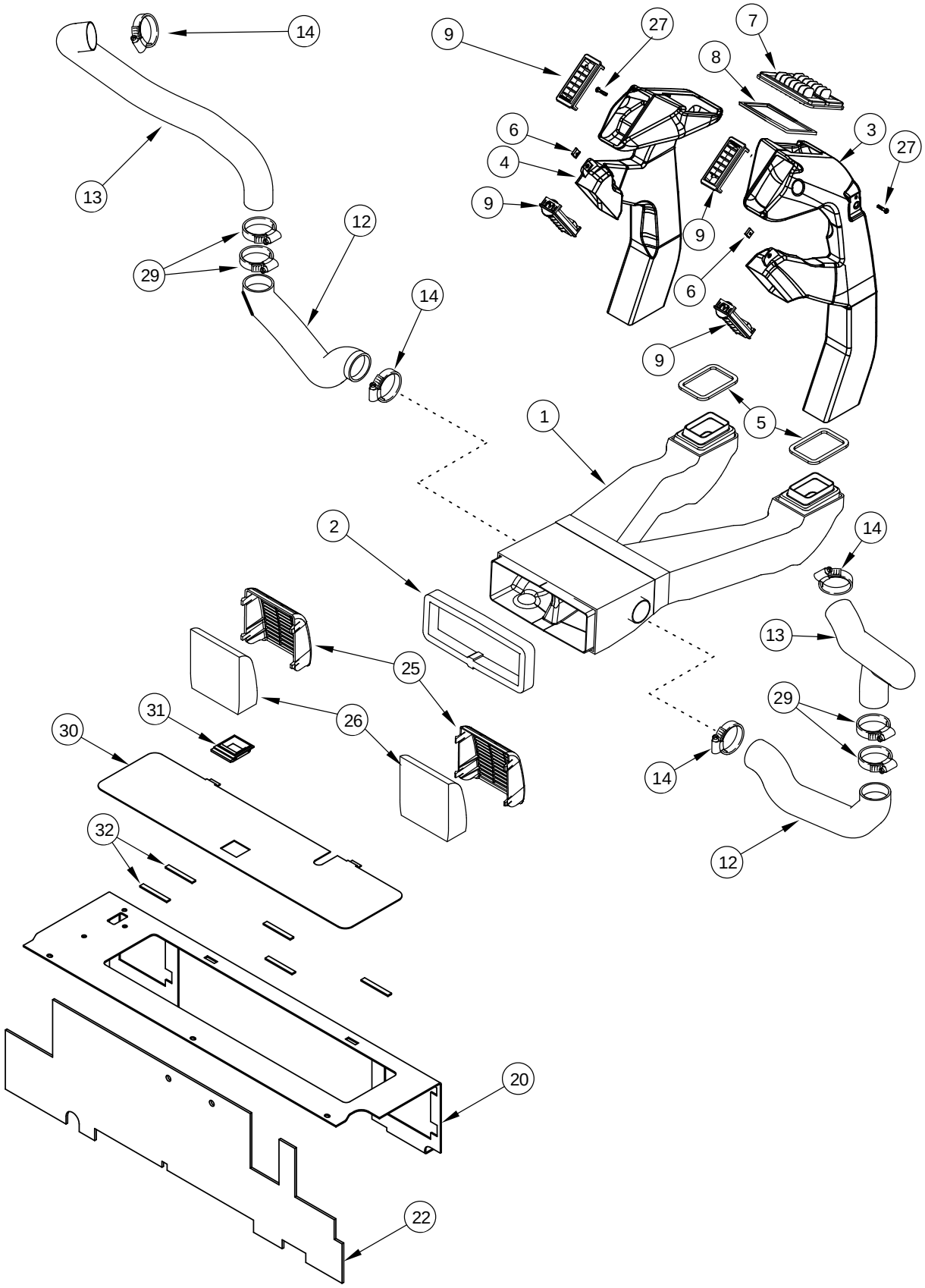

AIRE ACONDICIONADO - CONDUCTOS
CONDUTAS DO AR CONDICIONADO
AIRCONDITIONING - LUCHTLEIDINGEN
AIRCONDITION - KANALER

R	N	P.N.	MOD	Q	Description Denominacion	Descrizione Denominação	Description Beschrijving	Bezeichnung Beskrivelse	L.C.
1		330276A3	a	1	DUCT Inc. 2 CONDUCTO	CONDOTTO COLECTOR	CONDUIT LEIDING	KANAL KANAL	223C
1		87444943	b	1	DUCT Inc. 2 CONDUCTO	CONDOTTO COLECTOR	CONDUIT LEIDING	KANAL KANAL	223C
2		326665A1		1	SEAL ANILLO DE CIERRE	ANELLO DI TENUTA ANEL DE VEDACAO	JOINT DICHTINGSRING	DICHTUNG PAKNINGSRING	132A
3		417742A1		1	DUCT Right Hand, Inc. 6 CONDUCTO	CONDOTTO COLECTOR	CONDUIT LEIDING	LEITUNG KANAL	2880
4		281095A4		1	DUCT Left Hand, Inc. 6 CONDUCTO	CONDOTTO COLECTOR	CONDUIT LEIDING	LEITUNG KANAL	2880
5		257098A1		2	GASKET JUNTA HERMETICA	GUARNIZIONE JUNTA	JOINT DICHTINGSSTUK	DICHTUNG, FLACH PAKNING	123G
6		131-839		2	NUT No. 10 TUERCA	DADO PORCA	ECROU MOER	MUTTER MØTRIK	5780
7		363930A1		2	DIFFUSER DIFUSOR	DIFFUSORE DIFUSOR	DIFFUSEUR VERSTUIVER	LUFTDUESE SPREDEDYSE	P026
8		281084A2		1	GASKET JUNTA HERMETICA	GUARNIZIONE JUNTA	JOINT DICHTINGSSTUK	DICHTUNG, FLACH PAKNING	123G
9		363881A1	c	4	VENT RESPIRADERO	BOCCHETTA RESPIRO	BUSE D'AÉRATION VENT	BELÜFTUNG UDLUFTNINGSDYSE	P079
9		363931A1	d	4	VENT RESPIRADERO	BOCCHETTA RESPIRO	BUSE D'AÉRATION VENT	BELÜFTUNG UDLUFTNINGSDYSE	P079
12		256331A2	a	2	HOSE Right Hand and Left Hand MANGA	MANICOTTO FLESSIBILE TUBO FLEXIVEL	FLEXIBLE FLEXIBELE BUIS	SCHLAUCH SLANGE	030M
12		256331A2	b	1	HOSE Left Hand MANGA	MANICOTTO FLESSIBILE TUBO FLEXIVEL	FLEXIBLE FLEXIBELE BUIS	SCHLAUCH SLANGE	030M
13		303732A1	a	2	HOSE Right Hand and Left Hand MANGA	MANICOTTO FLESSIBILE TUBO FLEXIVEL	FLEXIBLE FLEXIBELE BUIS	SCHLAUCH SLANGE	030M
13		303732A1	b	1	HOSE Left Hand MANGA	MANICOTTO FLESSIBILE TUBO FLEXIVEL	FLEXIBLE FLEXIBELE BUIS	SCHLAUCH SLANGE	030M
14		214-1544	a	4	CLAMP 2-1/4 x 3-1/8 COLLAR	MORSETTO BRACADEIRA	COLLIER CLAMP	SCHELLE CLAMP	1640
14		214-1544	b	2	CLAMP 2-1/4 x 3-1/8 COLLAR	MORSETTO BRACADEIRA	COLLIER CLAMP	SCHELLE CLAMP	1640
20		87404728		1	EXTENSION PROLONGACION	PROLUNGA EXTENSAO	RALLONGE VERLENGSTUK	VERLÄNGERUNG FORLÆNGNING	226P
21		781-24820		5	SCREW M8 x 20 TORNILLO	VITE PARAFUSO	VIS SCHROEF	SCHRAUBE SKRUE	7450
22		86984088		1	INSULATION, FOAM ESPUMA AISLANTE	SCHIUMA ISOLANTE ESPUMA ISOLANTE	MOUSSE ISOLANTE ISOLATIESCHUIM	ISOLIERUNG SKUM ISOLERING	051S
24		780-34395		5	SCREW M4,8 x 9,5 TORNILLO	VITE PARAFUSO	VIS SCHROEF	SCHRAUBE SKRUE	7450

(a) BSN JAZ133183
(b) ASN JAZ133183
(c) BSN JAZ132559
(d) ASN JAZ132559

09-44		p2	11/04

AIR CONDITIONING - DUCTS
CLIMATIZZATORE - CONDOTTI
CLIMATISATION - CONDUITES
KLIMAANLAGENLEITUNGEN

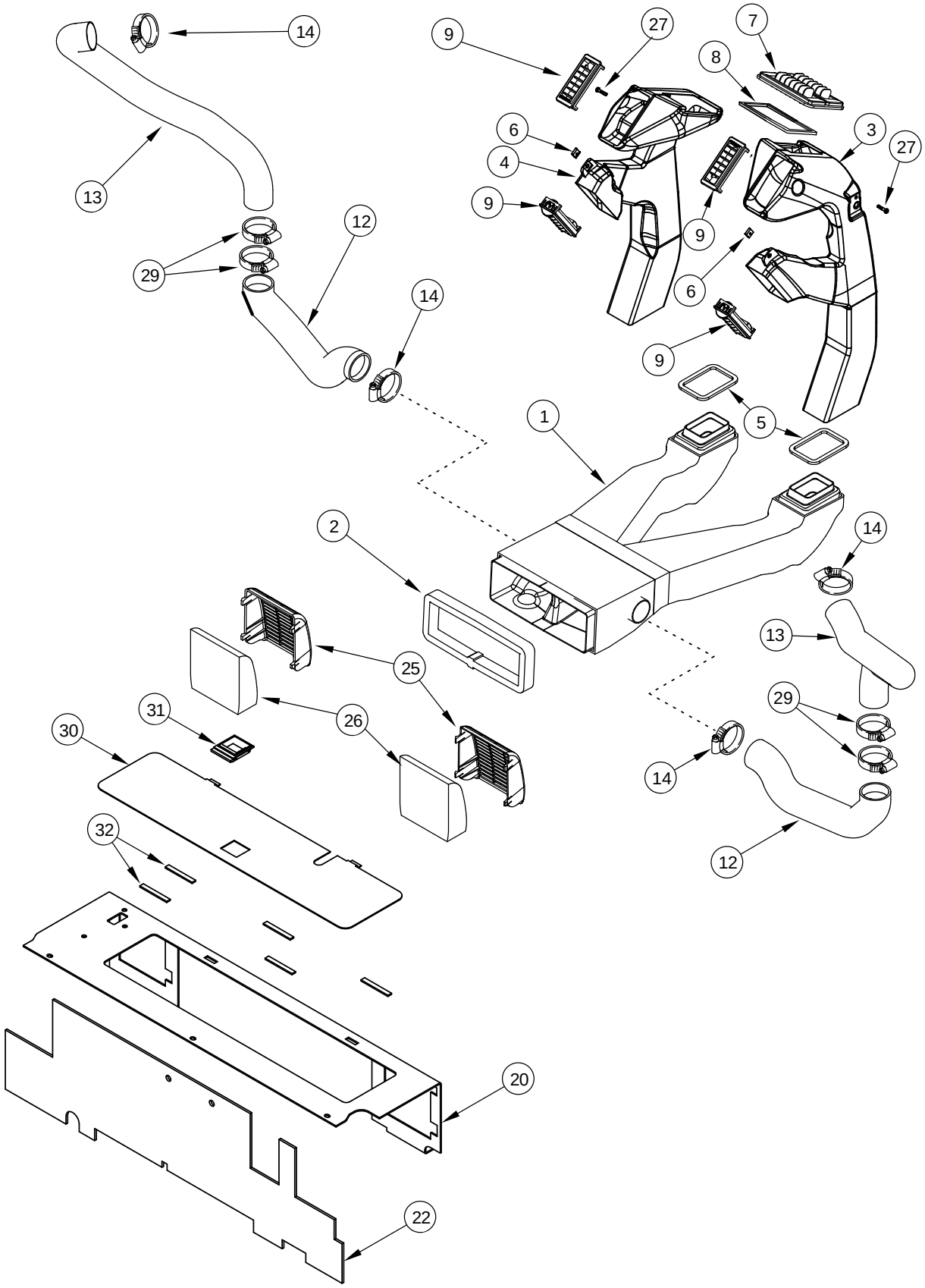

AIRE ACONDICIONADO - CONDUCTOS
CONDUTAS DO AR CONDICIONADO
AIRCONDITIONING - LUCHTLEIDINGEN
AIRCONDITION - KANALER

R	N	P.N.	MOD	Q	Description Denominacion	Descrizione Denominação	Description Beschrijving	Bezeichnung Beskrivelse	L.C.
25		301180A3		2	VENT (AIR) VALVULA DESAHOGO	SFIATO DELL'ARIA VALVULA DESAERACAO	VALVE D'AERATION VENT (AIR)	BELUFTUNGSVENTIL VENT (AIR)	P398
26		293615A1		2	FILTER FILTRO	FILTRO FILTRO	FILTRE FILTER	FILTER FILTER	065F
27		840-1525		2	SCREW M5 x 25 TORNILLO	VITE PARAFUSO	VIS SCHROEF	SCHRAUBE SKRUE	7450
29		214-1544	a	4	CLAMP 2-1/4 x 3-1/8 COLLAR	MORSETTO BRACADEIRA	COLLIER CLAMP	SCHELLE CLAMP	1640
29		214-1544	b	2	CLAMP 2-1/4 x 3-1/8 COLLAR	MORSETTO BRACADEIRA	COLLIER CLAMP	SCHELLE CLAMP	1640
		86984827	c	1	COVER Inc. 30 - 32 TAPADERA	COPERCHIO COBERTA	COUVERCLE DEKSEL	DECKEL DÆKSEL	265C
		87442171	d	1	COVER Inc. 30 - 32 TAPADERA	COPERCHIO COBERTA	COUVERCLE DEKSEL	DECKEL DÆKSEL	265C
30		86984822	c	1	COVER TAPADERA	COPERCHIO COBERTA	COUVERCLE DEKSEL	DECKEL DÆKSEL	265C
30		87442170	d	1	COVER TAPADERA	COPERCHIO COBERTA	COUVERCLE DEKSEL	DECKEL DÆKSEL	265C
31		406718A1		1	LATCH PESTILLO	CHIAVISTELLO TRINCO	LOQUET KLINK	KLINKE PAL	156C
32		412425A1		5	SEAL ANILLO DE CIERRE	ANELLO DI TENUTA ANEL DE VEDACAO	JOINT DICHTINGSRING	DICHTUNG PAKNINGSRING	132A

(a) BSN JAZ133183
(b) ASN JAZ133183
(c) BSN JAZ133008
(d) ASN JAZ133008

09-45		p1	11/04

CAB - INSULATION
CABINA - ISOLAMENTO
CABINE - ISOLATION
KABINENISOLIERUNG

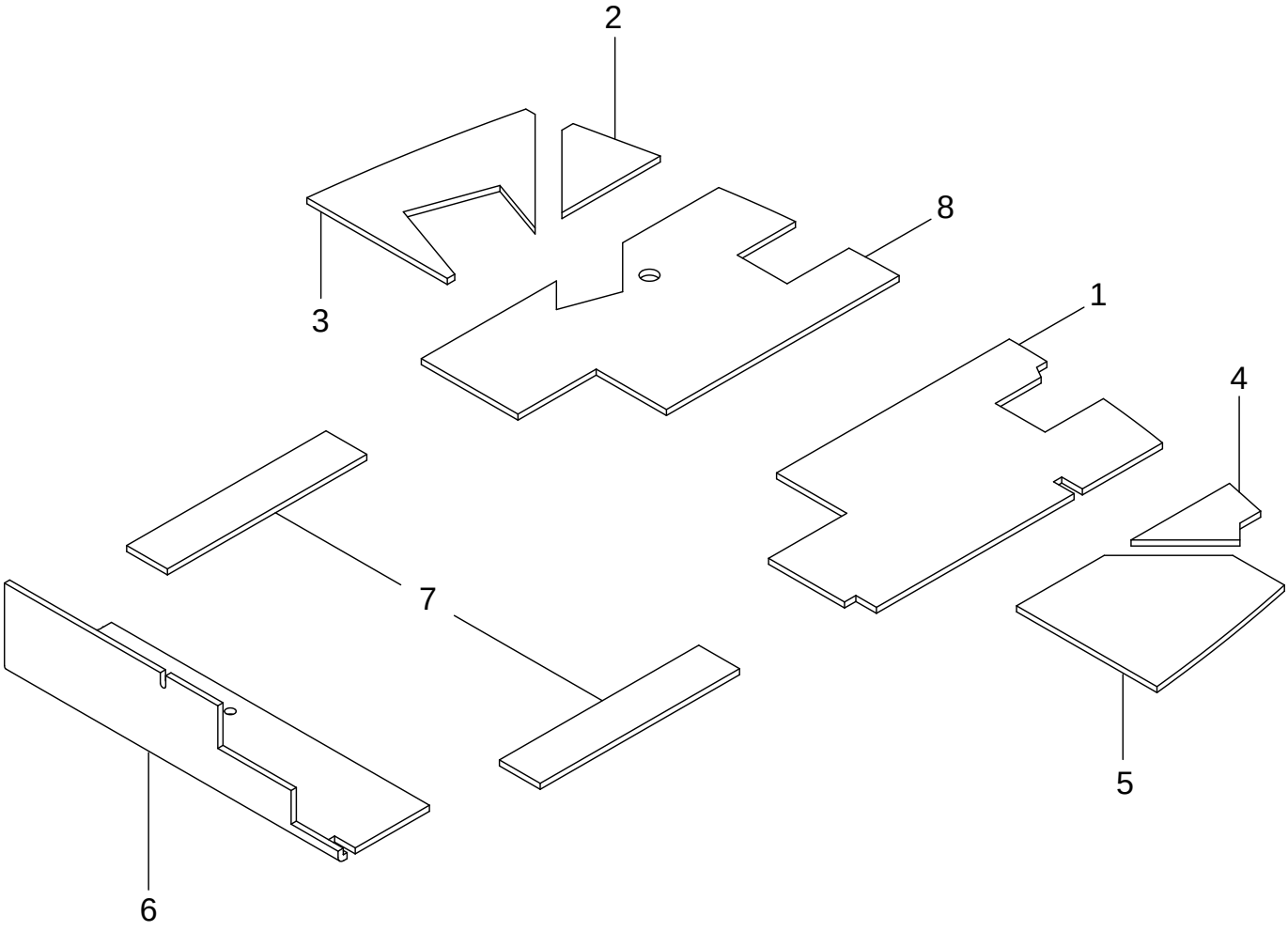

CABINA - AISLAMIENTO
ISOLAMENTO DA CABINA
CABINE - ISOLATIE
FØRERHUS - ISOLERING

R	N	P.N.	MOD	Q	Description Denominacion	Descrizione Denominação	Description Beschrijving	Bezeichnung Beskrivelse	L.C.
1		87430369		1	INSULATION, FOAM Middle, Right				
						SCHIUMA ISOLANTE	MOUSSE ISOLANTE	ISOLIERUNG	051S
					ESPUMA AISLANTE	ESPUMA ISOLANTE	ISOLATIESCHUIM	SKUM ISOLERING	
2		87430372		1	INSULATION, FOAM Left Front				
						SCHIUMA ISOLANTE	MOUSSE ISOLANTE	ISOLIERUNG	051S
					ESPUMA AISLANTE	ESPUMA ISOLANTE	ISOLATIESCHUIM	SKUM ISOLERING	
3		87430373		1	INSULATION, FOAM Left Rear				
						SCHIUMA ISOLANTE	MOUSSE ISOLANTE	ISOLIERUNG	051S
					ESPUMA AISLANTE	ESPUMA ISOLANTE	ISOLATIESCHUIM	SKUM ISOLERING	
4		87430374		1	INSULATION, FOAM Right Front				
						SCHIUMA ISOLANTE	MOUSSE ISOLANTE	ISOLIERUNG	051S
					ESPUMA AISLANTE	ESPUMA ISOLANTE	ISOLATIESCHUIM	SKUM ISOLERING	
5		87430375		1	INSULATION, FOAM Right Rear				
						SCHIUMA ISOLANTE	MOUSSE ISOLANTE	ISOLIERUNG	051S
					ESPUMA AISLANTE	ESPUMA ISOLANTE	ISOLATIESCHUIM	SKUM ISOLERING	
6		87430370		1	INSULATION, FOAM Middle Rear				
						SCHIUMA ISOLANTE	MOUSSE ISOLANTE	ISOLIERUNG	051S
					ESPUMA AISLANTE	ESPUMA ISOLANTE	ISOLATIESCHUIM	SKUM ISOLERING	
7		87430371		2	INSULATION, FOAM Floor Strip				
						SCHIUMA ISOLANTE	MOUSSE ISOLANTE	ISOLIERUNG	051S
					ESPUMA AISLANTE	ESPUMA ISOLANTE	ISOLATIESCHUIM	SKUM ISOLERING	
8		87430368		1	INSULATION, FOAM Middle, Left				
						SCHIUMA ISOLANTE	MOUSSE ISOLANTE	ISOLIERUNG	051S
					ESPUMA AISLANTE	ESPUMA ISOLANTE	ISOLATIESCHUIM	SKUM ISOLERING	

09-46		p1	11/04

DRAWBAR AND HAMMERSTRAP
BARRA DI TRAINO E PERNO D'ATTACCO AUTOMATICO
BARRE D'ATTELAGE ET CHAPE À VERROUILLAGE AUTOMATIQUE
ZUGPENDEL UND HAKENFEDER

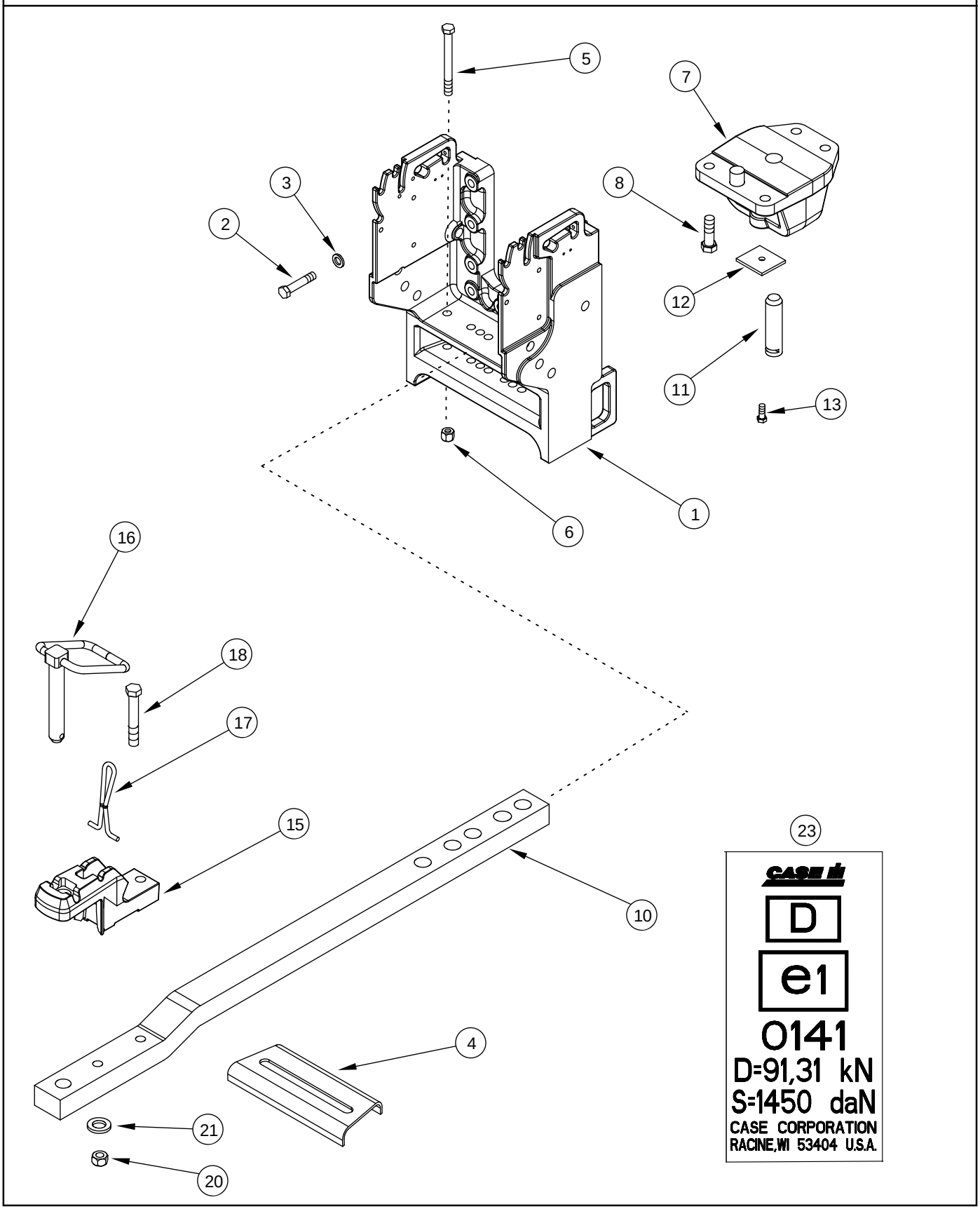

BARRA DE TIRO Y CUBREJUNTAS
BARRA DE TRACÇÃO E TIRA DE SEGURANÇA
TREKSTANG EN HAMERBAND
TRÆKSTANG OG HAMMERREM

R	N	P.N.	MOD	Q	Description Denominacion	Descrizione Denominação	Description Beschrijving	Bezeichnung Beskrivelse	L.C.
1		251788A3		1	SUPPORT SOPORTE	SUPPORTO SUPORTE	SUPPORT STEUN	STÜTZE BESLAG	300S
2		828-16080		10	SCREW M16 x 80; 10.9 TORNILLO	VITE PARAFUSO	VIS SCHROEF	SCHRAUBE SKRUE	7450
3		896-12016		10	WASHER 17,5 x 30 x 4 mm ARANDELA	ROSETTA PIANA ANILHA	RONDELLE SLUITRING	SCHEIBE FLADSKIVE	9720
4		238495A3		1	PLATE PLACA	PIASTRA CHAPA	PLAQUE PLAAT	PLATTE PLADE	105P
5		827-16160		2	SCREW M16 x 160; 10.9 TORNILLO	VITE PARAFUSO	VIS SCHROEF	SCHRAUBE SKRUE	7450
6		832-10416		2	NUT M16; 8 TUERCA	DADO PORCA	ECROU MOER	MUTTER MØTRIK	5780
7		232968A1		1	SUPPORT SOPORTE	SUPPORTO SUPORTE	SUPPORT STEUN	STÜTZE BESLAG	300S
8		828-20065		4	SCREW M20 x 65; 10.9 TORNILLO	VITE PARAFUSO	VIS SCHROEF	SCHRAUBE SKRUE	7450
10		275054A2		1	DRAWBAR, SWINGING BRAZO OSCILANTE	BRACCIO OSCILLANTE BRAÇO OSCILANTE	BARRE OSCILLANTE ZWAAIARM	ZUGHAKEN SCHWINGEN SVINGBAR TRÆKBOM	132B
11		1982103C1		1	PIN PERNO	PERNO PERNO	AXE PEN	BOLZEN STIFT	080P
12		67828C1		1	RETAINER RETENEDOR	RITEGNO RETENTOR	RETENEUR HOUDER	HALTEVORRICHTUNG HOLDER	109R
13		627-12030		1	SCREW M12 x 30; 10.9 TORNILLO	VITE PARAFUSO	VIS SCHROEF	SCHRAUBE SKRUE	7450
14		892-11012		1	WASHER, LOCK M12 ARANDELA DE FRENO	ROSETTA DI SICUREZZA ANILHA DE FIXACAO	RONDELLE FREIN VEERRING	SPRENGRING LAASESKIVE	132R
15		275055A3		1	STRAP BANDA	BANDELLA BANDA	SANGLE RIEM	GURT STROP	532B
16		275056A3		1	PIN, HITCH PASADOR DE ENGANCH	PERNO DELL'ATTACCO PINO	AXE D'ATTELAGE PIN, HITCH	KUPPLUNGSBOLZEN TRÆKKROGSPIND	P740
17		232617A1		1	LATCH PESTILLO	CHIAVISTELLO TRINCO	LOQUET KLINK	KLINKE PAL	156C
18		827-20130		2	SCREW M20 x 130; 10.9 TORNILLO	VITE PARAFUSO	VIS SCHROEF	SCHRAUBE SKRUE	7450
20		829-1420		2	NUT M20; 10 TUERCA	DADO PORCA	ECROU MOER	MUTTER MØTRIK	5780
21		896-11020		2	WASHER 22 x 37 x 4 mm ARANDELA	ROSETTA PIANA ANILHA	RONDELLE SLUITRING	SCHEIBE FLADSKIVE	9720
23		370061A1		1	DECAL CALCOMANIA	DECALCOMANIA DECALCOMANIA	DECALCOMANIE DECAL	ABZIEHBILD TRANSFER	012D

09-47		p1	11/04

DRAWBAR AND HAMMERSTRAP - ITALY ONLY
BARRA DI TRAINO E PERNO D'ATTACCO AUTOMATICO - SOLO PER L'ITALIA
BARRE D'ATTELAGE ET CHAPE À VERROUILLAGE AUTOMATIQUE - ITALIE UNIQUEMENT
ZUGPENDEL UND HAKENFEDER (NUR ITALIEN)

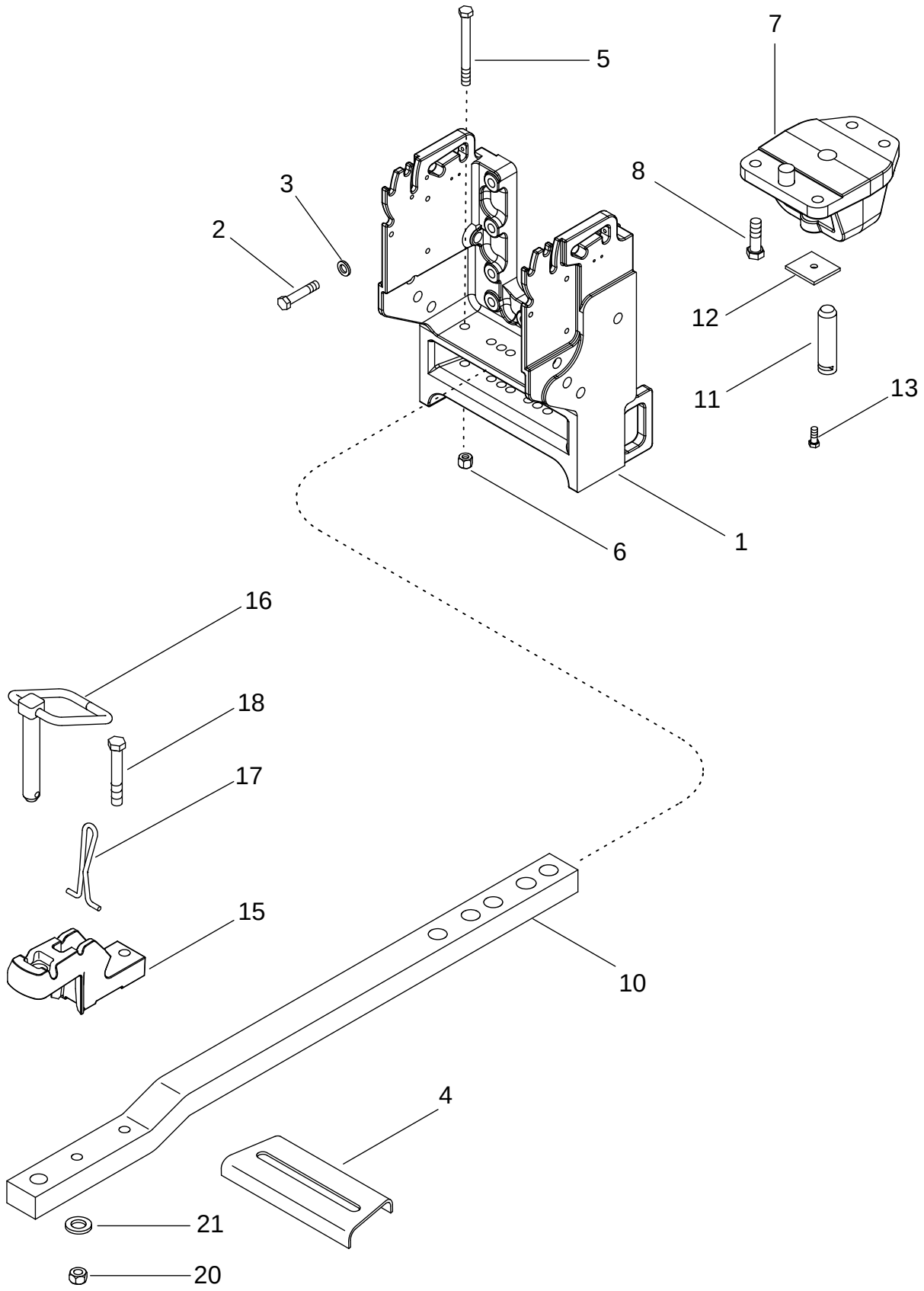

BARRA DE TIRO Y CUBREJUNTAS - SÓLO ITALIA
BARRA DE TRACÇÃO E TIRA DE SEGURANÇA - APENAS NA ITÁLIA
TREKSTANG EN HAMERBAND - UITSLUITEND ITALIË
TRÆKSTANG OG HAMMERREM - KUN ITALIEN

R	N	P.N.	MOD	Q	Description Denominacion	Descrizione Denominação	Description Beschrijving	Bezeichnung Beskrivelse	L.C.
1		251788A3		1	SUPPORT SOPORTE	SUPPORTO SUPORTE	SUPPORT STEUN	STÜTZE BESLAG	300S
2		828-16080		10	SCREW M16 x 80; 10.9 TORNILLO	VITE PARAFUSO	VIS SCHROEF	SCHRAUBE SKRUE	7450
3		896-12016		10	WASHER 17,5 x 30 x 4 mm ARANDELA	ROSETTA PIANA ANILHA	RONDELLE SLUITRING	SCHEIBE FLADSKIVE	9720
4		238495A3		1	PLATE PLACA	PIASTRA CHAPA	PLAQUE PLAAT	PLATTE PLADE	105P
5		827-16160		2	SCREW M16 x 160; 10.9 TORNILLO	VITE PARAFUSO	VIS SCHROEF	SCHRAUBE SKRUE	7450
6		832-10416		2	NUT M16; 8 TUERCA	DADO PORCA	ECROU MOER	MUTTER MØTRIK	5780
7		232968A1		1	SUPPORT SOPORTE	SUPPORTO SUPORTE	SUPPORT STEUN	STÜTZE BESLAG	300S
8		828-20065		4	SCREW M20 x 65; 10.9 TORNILLO	VITE PARAFUSO	VIS SCHROEF	SCHRAUBE SKRUE	7450
10		445448A1		1	DRAWBAR, SWINGING BRAZO OSCILANTE	BRACCIO OSCILLANTE BRAÇO OSCILANTE	BARRE OSCILLANTE ZWAAIARM	ZUGHAKEN SCHWINGEN SVINGBAR TRÆKBOM	132B
11		1982103C1		1	PIN PERNO	PERNO PERNO	AXE PEN	BOLZEN STIFT	080P
12		67828C1		1	RETAINER RETENEDOR	RITEGNO RETENTOR	RETENEUR HOUDER	HALTEVORRICHTUNG HOLDER	109R
13		627-12030		1	SCREW M12 x 30; 10.9 TORNILLO	VITE PARAFUSO	VIS SCHROEF	SCHRAUBE SKRUE	7450
14		892-11012		1	WASHER, LOCK M12 ARANDELA DE FRENO	ROSETTA DI SICUREZZA ANILHA DE FIXACAO	RONDELLE FREIN VEERRING	SPRENGRING LAASESKIVE	132R
15		275055A3		1	STRAP BANDA	BANDELLA BANDA	SANGLE RIEM	GURT STROP	532B
16		445452A2		1	PIN, HITCH PASADOR DE ENGANCH	PERNO DELL'ATTACCO PINO	AXE D'ATTELAGE PIN, HITCH	KUPPLUNGSBOLZEN TRÆKKROGSPIND	P740
17		232617A1		1	LATCH PESTILLO	CHIAVISTELLO TRINCO	LOQUET KLINK	KLINKE PAL	156C
18		827-20130		2	SCREW M20 x 130; 10.9 TORNILLO	VITE PARAFUSO	VIS SCHROEF	SCHRAUBE SKRUE	7450
20		829-1420		2	NUT M20; 10 TUERCA	DADO PORCA	ECROU MOER	MUTTER MØTRIK	5780
21		896-11020		2	WASHER 22 x 37 x 4 mm ARANDELA	ROSETTA PIANA ANILHA	RONDELLE SLUITRING	SCHEIBE FLADSKIVE	9720

09-48		p1	11/04

HITCH - SUPPORTS AND ROCKSHAFT
ATTACCO - SUPPORTI E ALBERO BILANCIERE
ATTELAGE - SUPPORTS ET ARBRE OSCILLANT
KRAFTHEBER-HUBWELLENHALTERUNG UND -HUBWELLE

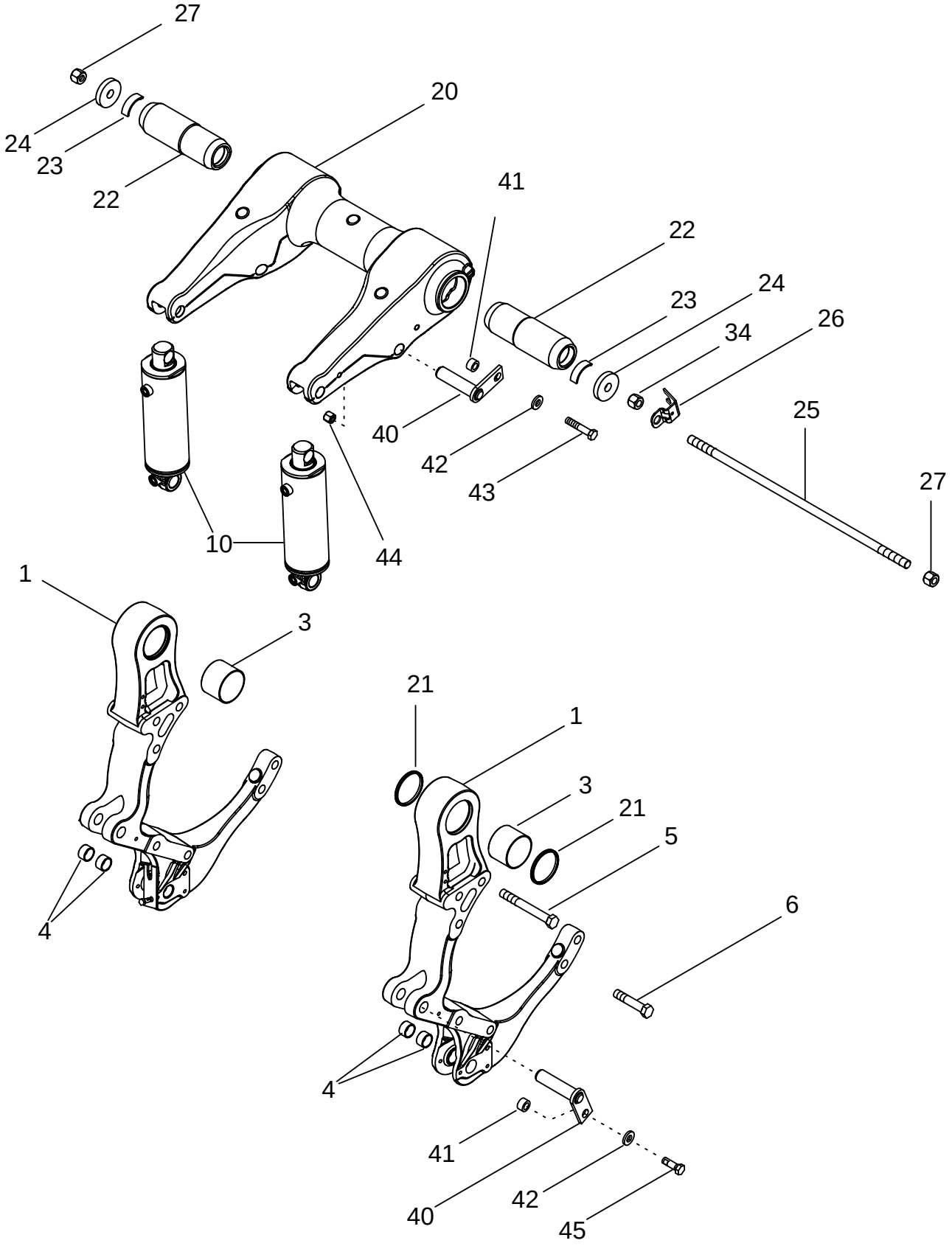

ENGANCHE - SOPORTES Y EJE BASCULANTE
SUPORTES E EIXO OSCILANTE DO ENGATE
HEFINRICHTING - STEUNEN EN TUIMELAS
TRÆK - STØTTE OG VIPPEARMSAKSEL

R	N	P.N.	MOD	Q	Description Denominacion	Descrizione Denominação	Description Beschrijving	Bezeichnung Beskrivelse	L.C.
1		302887A5		2	BRACKET PIEZA DE SOPORTE	STAFFA BRACADEIRA	PATTE FIXATION STEUNBEUGEL	HALTERUNG BESLAG	225S
3		222355A1		1	BUSHING CASQUILLO	BOCCOLA CASQUILHO	BAGUE LAGERBUS	BUECHSE BOESNING	095B
4		1960223C1		2	BUSHING CASQUILLO	BOCCOLA CASQUILHO	BAGUE LAGERBUS	BUECHSE BOESNING	095B
5		828-24200		10	SCREW M24 x 200; 10.9 TORNILLO	VITE PARAFUSO	VIS SCHROEF	SCHRAUBE SKRUE	7450
6		828-24120		4	SCREW M24 x 120; 10.9 TORNILLO	VITE PARAFUSO	VIS SCHROEF	SCHRAUBE SKRUE	7450
10	1, 2	305002A2		AR	CYLINDER 89 ID x 260 mm strk, CILINDRO	CILINDRO CILINDRO	VERIN CYLINDER	ZYLINDER CYLINDER	164C
10	1, 3	278277A3		AR	CYLINDER ASSY. 95 ID x 260 mm strk CILINDRO (CONJUNTO)	CILINDRO, COMPLESS. CILINDRO CONJUNTO	VERIN CYLINDER ASSY.	ZYLINDER (KPLT.) CYLINDER ASSY.	P477
10	1, 4	278419A3		AR	CYLINDER 105 ID x 260 mm strk CILINDRO	CILINDRO CILINDRO	VERIN CYLINDER	ZYLINDER CYLINDER	164C
20		413467A1		2	BRACKET, HITCH SOPORTE DE ENGACHE	STAFFA, ATTACCO SUPORTE ENGATE	SUPPORT D'ATTELAGE BRACKET, HITCH	KUPPLUNGSHALTERUN BUK, KROG	P741
21		222354A1		4	SEAL ANILLO DE CIERRE	ANELLO DI TENUTA ANEL DE VEDACAO	JOINT DICHTINGSRING	DICHTUNG PAKNINGSRING	132A
22		251386A1		2	PIN PERNO	PERNO PERNO	AXE PEN	BOLZEN STIFT	080P
23		220598A3		6	RING, SNAP ANILLO DE RESORTE	ANELLO ELASTICO ANEL	ANNEAU D'ARRÊT RING, SNAP	SICHERUNGSRING LÅSERING	054A
24		220599A2		2	WASHER ARANDELA	ROSETTA PIANA ANILHA	RONDELLE SLUITRING	BEILAGSCHEIBE FLADSKIVE	131R
25		220600A2		1	ROD VARILLA	ASTA HASTE	TRINGLE STANG	STANGE STANG	090A
26		241889A3		1	SUPPORT SOPORTE	SUPPORTO SUPORTE	SUPPORT STEUN	STÜTZE BESLAG	300S
27		832-10424		2	NUT M24; 8 TUERCA	DADO PORCA	ECROU MOER	MUTTER MØTRIK	5780
34		829-1424		1	NUT M24; 10 TUERCA	DADO PORCA	ECROU MOER	MUTTER MØTRIK	010D
40		391415A1		4	PIN PERNO	PERNO PERNO	AXE PEN	BOLZEN STIFT	080P
41		321365A1		4	SPACER SEPARADOR	DISTANZIALE ESPACADOR	ENTRETOISE AFSTANDSRING	DISTANZSTÜCK AFSTANDSSTYKKE	075D
42		896-15012		4	WASHER 13,5 x 28 x 4 mm ARANDELA	ROSETTA PIANA ANILHA	RONDELLE SLUITRING	SCHEIBE FLADSKIVE	9720
43		814-12060		2	SCREW M12 x 60; 8.8 TORNILLO	VITE PARAFUSO	VIS SCHROEF	SCHRAUBE SKRUE	7450

(1) Part Number Stamped On Cylinder
(2) See Figure 08-24
(3) See Figure 08-25
(4) See Figure 08-26

09-48		p2	11/04

HITCH - SUPPORTS AND ROCKSHAFT
ATTACCO - SUPPORTI E ALBERO BILANCIERE
ATTELAGE - SUPPORTS ET ARBRE OSCILLANT
KRAFTHEBER-HUBWELLENHALTERUNG UND -HUBWELLE

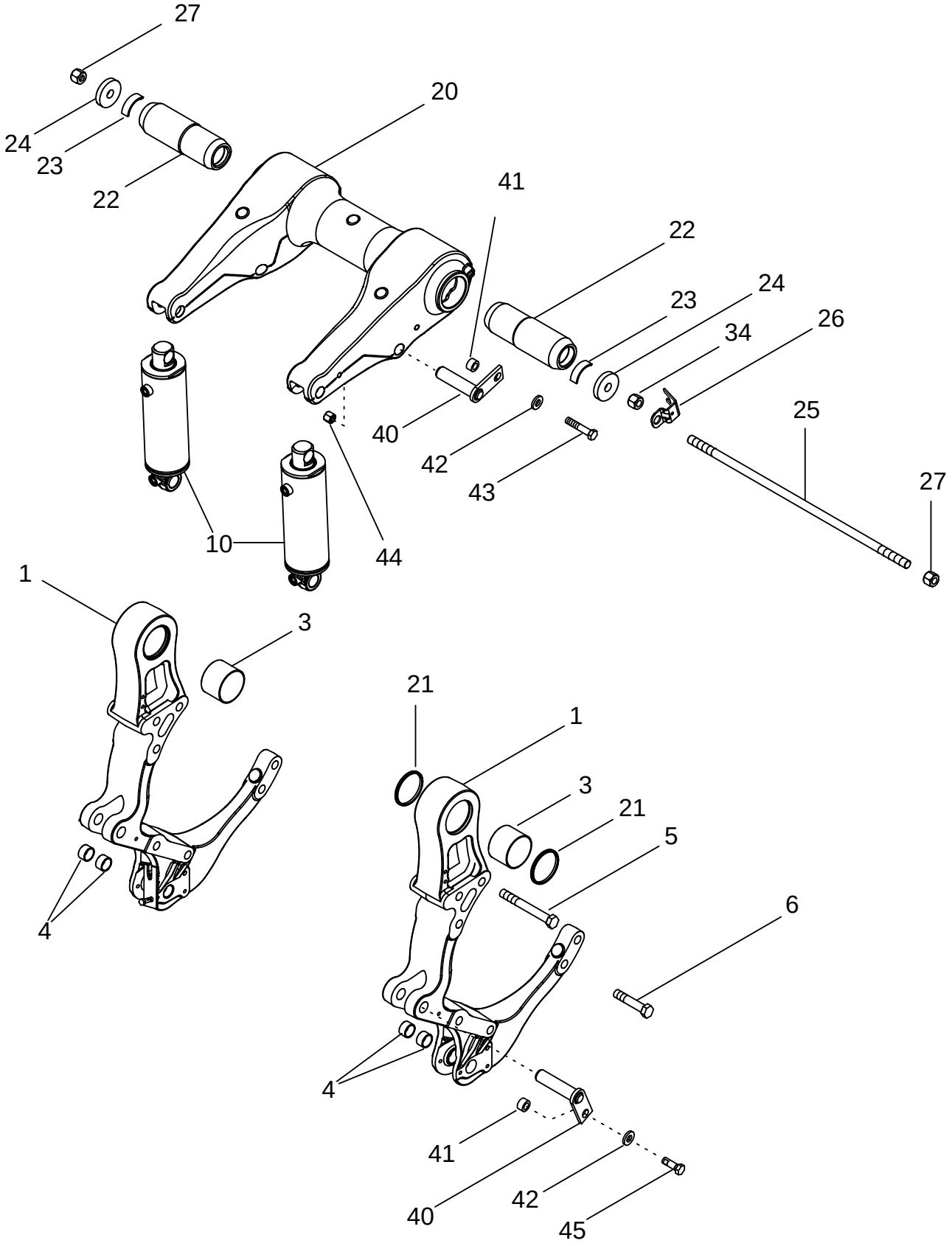

ENGANCHE - SOPORTES Y EJE BASCULANTE
SUPORTES E EIXO OSCILANTE DO ENGATE
HEFINRICHTING - STEUNEN EN TUIMELAS
TRÆK - STØTTE OG VIPPEARMSAKSEL

R	N	P.N.	MOD	Q	Description Denominacion	Descrizione Denominação	Description Beschrijving	Bezeichnung Beskrivelse	L.C.
44		832-10412		2	NUT M12; 8 TUERCA	DADO PORCA	ECROU MOER	MUTTER MØTRIK	010D
45		806-12035		2	BOLT M12 x 35; 10.9 TORNILLO	BULLONE PARAFUSO	BOULON BOUT	SCHAUBENBOLZEN SKRUE	0810

09-49		p1	11/04

HITCH - TOP LINK
ATTACCO - TIRANTE SUPERIORE
ATTELAGE - BARRE DE POUSSÉE
KRAFTHEBER-OBERLENKER

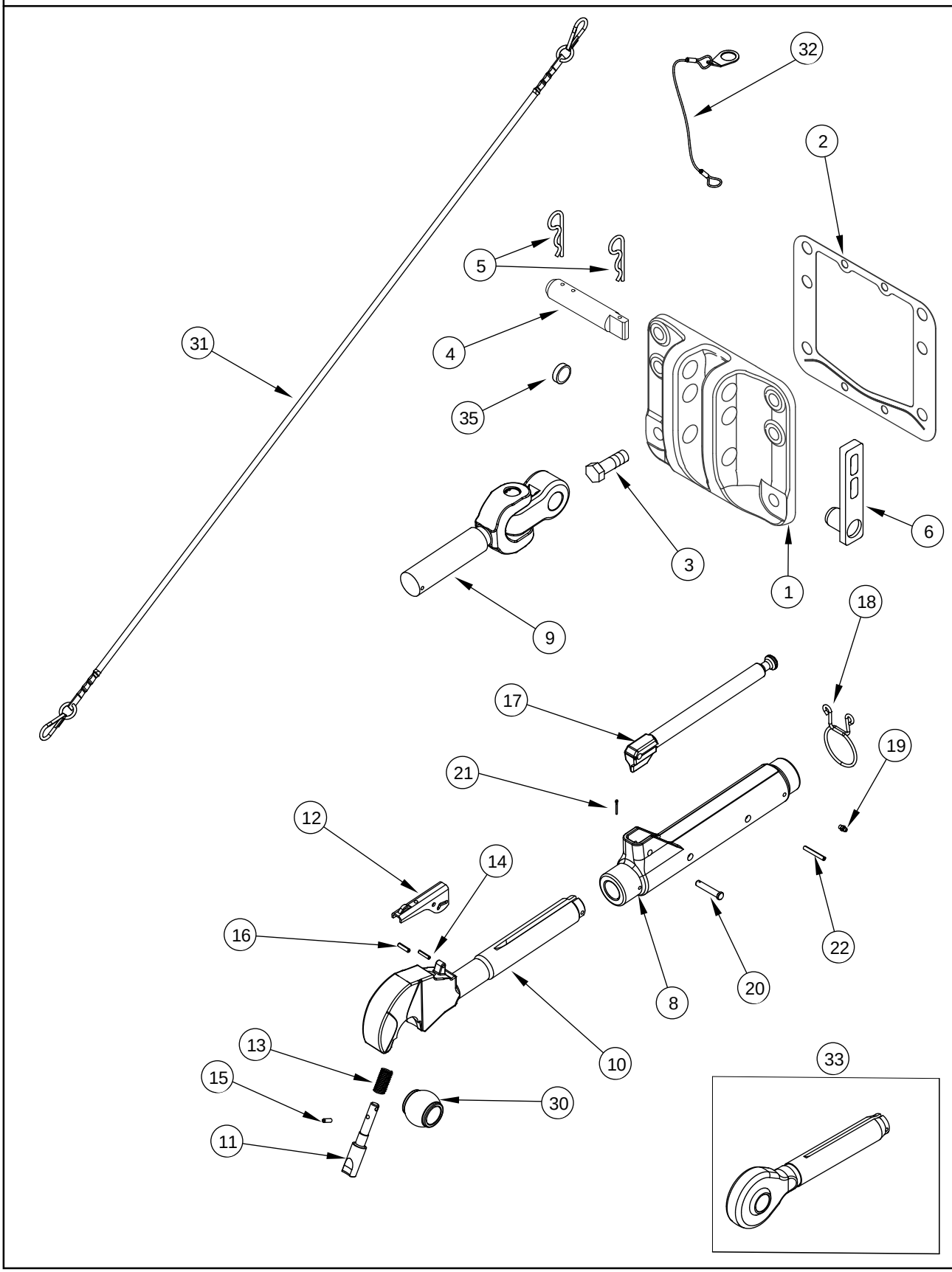

ENGANCHE - ARTICULACIÓN SUPERIOR
ELO SUPERIOR DO ENGATE
HEFINRICHTING - TOPVERBINDINGSSTUK
TRÆK - TOPSTANG

R	N	P.N.	MOD	Q	Description Denominacion	Descrizione Denominação	Description Beschrijving	Bezeichnung Beskrivelse	L.C.
1		377206A2		1	SUPPORT SOPORTE	SUPPORTO SUPORTE	SUPPORT STEUN	STÜTZE BESLAG	300S
2		379145A1		1	GASKET JUNTA HERMETICA	GUARNIZIONE JUNTA	JOINT DICHTINGSSTUK	DICHTUNG, FLACH PAKNING	123G
3		628-20060		6	SCREW M20 x 60; 10.9 TORNILLO	VITE PARAFUSO	VIS SCHROEF	SCHRAUBE SKRUE	7450
4		378929A1		1	PIN PERNO	PERNO PERNO	AXE PEN	BOLZEN STIFT	080P
5		486830R1		2	PIN, SPLIT (COTTER) PASADOR ABIERTO	COPPIGLIA TROCO DE ABRIR	GOUPILLE SPLITPEN	SPLINT SPLITBOLT	270C
6		378932A1		1	PIN PERNO	PERNO PERNO	AXE PEN	BOLZEN STIFT	080P
8		1954223C4		1	ARM BRAZO	BRACCIO BRAÇO	BRAS ARM	AUSLEGER ARM	130B
9		319585A1		1	CLEVIS Right Hand Threads HORQUILLA PEQUENA	FORCELLINO FORQUILHA	FOURCHETTE GAFFEL	GABELKOPF GAFFELBOLT	084F
10		245301A1		1	END Left Hand Threads, Inc. 11 - 16 EXTREMIDAD	PARTE FINALE EXTREMIDADE	EXTRÉMITÉ END	ENDSTÜCK ENDE	3010
11		118707A1		1	PIN PERNO	PERNO PERNO	AXE PEN	BOLZEN STIFT	080P
12		118708A1		1	LEVER ASSY. PALANCA (CONJUNTO)	LEVA, COMPLESSIVO ALAVANCA CONJUNTO	LEVIER (ASSEMBLE) LEVER ASSY.	HEBEL (KPLT.) LEVER ASSY.	P520
13		118705A1		1	SPRING RESORTE	MOLLA MOLA	RESSORT VEER	FEDER FJEDER	100M
14		838-5524		1	SPLIT PIN/SAFETY PIN 5 x 24 mm PASADOR	PERNO DIVISO PINO	GOUPILLE SPLIT PIN/SAFETY PIN	SPLINT/STIFT SPLIT PIN/SAFETY PIN	Z510
15		838-5620		1	SPLIT PIN/SAFETY PIN 6 x 20 mm PASADOR	PERNO DIVISO PINO	GOUPILLE SPLIT PIN/SAFETY PIN	SPLINT/STIFT SPLIT PIN/SAFETY PIN	Z510
16		838-5624		1	SPLIT PIN/SAFETY PIN 6 x 24 mm PASADOR	PERNO DIVISO PINO	GOUPILLE SPLIT PIN/SAFETY PIN	SPLINT/STIFT SPLIT PIN/SAFETY PIN	Z510
17		1331863C2		1	HANDLE MANECILLA	MANIGLIA MANIPULO	POIGNÉE HENDEL	HANDGRIFF HAANDTAG	020M
18		315912A1		1	SPRING RESORTE	MOLLA MOLA	RESSORT VEER	FEDER FJEDER	100M
19		378716A1		2	NIPPLE, LUBE ENGRASADOR	INGRASSATORE LUBRIFICADOR	GRAISSEUR SMEERNIPPEL	SCHMIERNIPPEL SMØRENIPPEL	060I
20		427-6200		1	PIN, CLEVIS 3/8 x 2.0 PASADOR DE HORQUILL	SPINA, PER FORCELLA CUPILHA	AXE DE CHAPE PIN, CLEVIS	GABELSTIFT GAFFELBOLT	P694
21		432-610		1	PIN 3/32 x 5/8 PERNO	PERNO PERNO	AXE PEN	BOLZEN STIFT	080P
22		738-5645		2	PIN, ROLL 6 x 45 mm PASADOR TUBOLAR	SPINA ELASTICA TROCO	GOUPILLE ELASTIQUE SPANSTIFT	SPANNSTIFT SPLIT	P613
30		359188A2		1	BALL JOINT JUNTA DE ROTULA	GIUNTO SFERICO JUNTA ESFÉRICA	ROTULE KOGELGEWRICHT	KUGELGELENK KUGLELED	070G

09-49		p2	11/04

HITCH - TOP LINK
ATTACCO - TIRANTE SUPERIORE
ATTELAGE - BARRE DE POUSSÉE
KRAFTHEBER-OBERLENKER

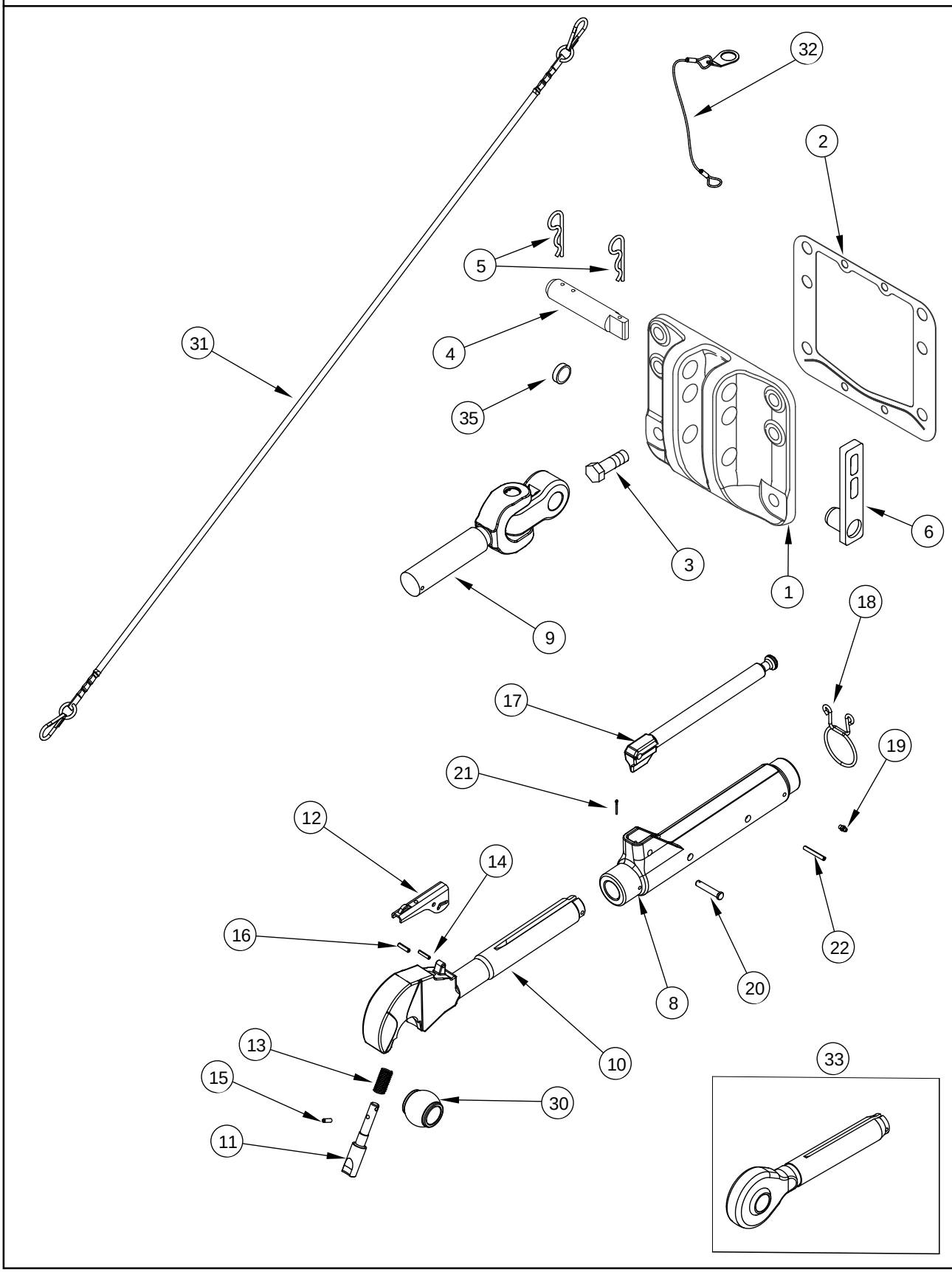

ENGANCHE - ARTICULACIÓN SUPERIOR
ELO SUPERIOR DO ENGATE
HEFINRICHTING - TOPVERBINDINGSSTUK
TRÆK - TOPSTANG

R	N	P.N.	MOD	Q	Description Denominacion	Descrizione Denominação	Description Beschrijving	Bezeichnung Beskrivelse	L.C.
31		1348080C1		1	CABLE CABLE	CAVO CABO	CABLE KABEL	KABEL KABEL	650C
32		336494A1		1	CHAIN CADENA	CATENA CORRENTE	CHAINE KETTING	KETTE KÆDE	095C
33		1282082C2		1	END Left Hand Threads, If Equipped EXTREMIDAD	PARTE FINALE EXTREMIDADE	EXTRÉMITÉ END	ENDSTÜCK ENDE	3010
35		641-3432		3	PLUG 32 mm TAPÓN	TAPPO BUJAO	BOUCHON PLUG	STOPFEN PROP	6400

09-50		p1	11/04

HITCH - LIFT LINKS
ATTACCO - TIRANTI DI SOLLEVAMENTO
ATTELAGE - BIELLES DE RELEVAGE
KRAFTHEBER-HUBSTANGEN

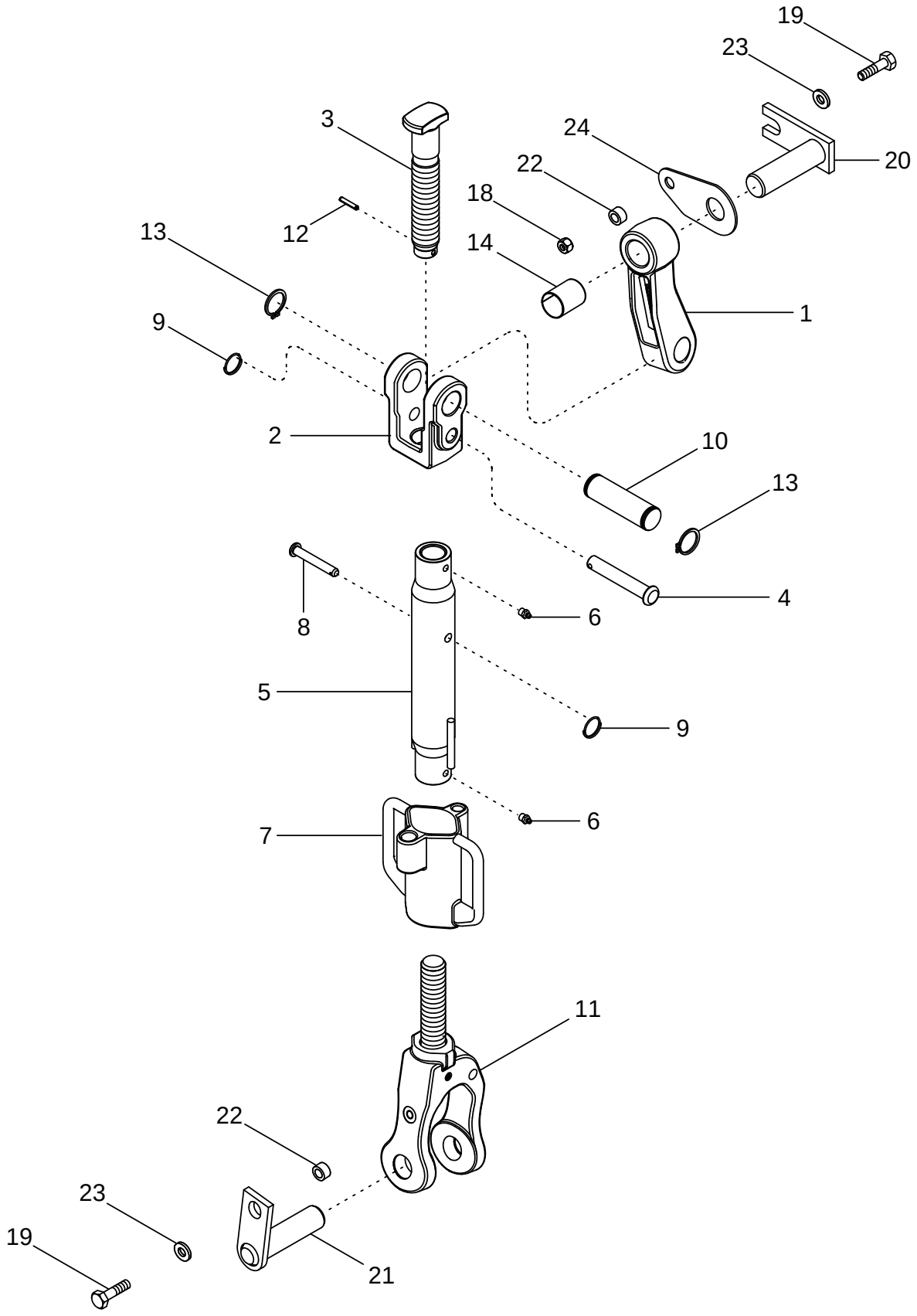

ENGANCHE - ARTICULACIONES DE ELEVACIÓN
ELOS DE ELEVAÇÃO DO ENGATE
HEFINRICHTING - HEFVERBINDINGSSTUKKEN
TRÆK - ØVERSTE LØFTEFORBINDELSER

R	N	P.N.	MOD	Q	Description Denominacion	Descrizione Denominação	Description Beschrijving	Bezeichnung Beskrivelse	L.C.
1		405361A1		2	PITMAN BIELA DE CONEXION	LEVA DI RINVIO BIELA DE CONEXAO	BIELLETTE PITMAN	KURBELSTANGE PITMAN	6300
2		405362A2		2	YOKE HORQUILLA	FORCELLA GARFO	MACHOIRE VORK	GABEL KRAFTOVERFOERINGSC	085F
3		412533A1		2	ROD VARILLA	ASTA HASTE	TRINGLE STANG	STANGE STANG	090A
4		412534A1		2	PIN PERNO	PERNO PERNO	AXE PEN	BOLZEN STIFT	080P
5		405370A1		2	TURNBUCKLE TORNIQUETE	TENDITORE TORQUINETE	TENDEUR DE TRINGLE TURNBUCKLE	SPANNSCHLOSS STRAMMESKRUE	9460
6		378716A1		4	NIPPLE, LUBE ENGRASADOR	INGRASSATORE LUBRIFICADOR	GRAISSEUR SMEERNIPPEL	SCHMIERNIPPEL SMØRENIPPEL	060I
7		405364A1		2	HANDLE MANECILLA	MANIGLIA MANIPULO	POIGNÉE HENDEL	HANDGRIFF HAANDTAG	020M
8		728-1280		2	PIN 12 X 80 mm PERNO	PERNO PERNO	AXE PEN	BOLZEN STIFT	6200
9		307431A1		4	RING, SNAP ANILLO DE RESORTE	ANELLO ELASTICO ANEL	ANNEAU D'ARRÊT RING, SNAP	SICHERUNGSRING LÅSERING	054A
10		412536A2		2	PIN PERNO	PERNO PERNO	AXE PEN	BOLZEN STIFT	080P
11		405366A1		2	ROD VARILLA	ASTA HASTE	TRINGLE STANG	STANGE STANG	090A
12		738-1632		2	PIN 6 x 32 mm PERNO	PERNO PERNO	AXE PEN	BOLZEN STIFT	080P
13		800-5135		4	CIRCLIP 35 mm RETENEDOR	ANELLO DI RITEGNO FREIO DE MOLA	CIRCLIP BOORGVEER	HALTERING LÃSERING	P019
14		237443A1		2	BUSHING CASQUILLO	BOCCOLA CASQUILHO	BAGUE LAGERBUS	BUECHSE BOESNING	095B
18		832-10412		2	NUT M12; 8 TUERCA	DADO PORCA	ECROU MOER	MUTTER MØTRIK	010D
19		827-12050		4	SCREW M12 x 50; 10.9 TORNILLO	VITE PARAFUSO	VIS SCHROEF	SCHRAUBE SKRUE	7450
20		321367A3		2	PIN ASSY. PASADOR (CONJUNTO)	GRUPPO SPINA PINO CONJUNTO	CHEVILLE (ASSEMBLEE) PIN ASSY.	STIFT (KPLT.) PIN ASSY.	P524
21		414696A1		2	PIN ASSY. PASADOR (CONJUNTO)	GRUPPO SPINA PINO CONJUNTO	CHEVILLE (ASSEMBLEE) PIN ASSY.	STIFT (KPLT.) PIN ASSY.	P524
22		321365A1		4	SPACER SEPARADOR	DISTANZIALE ESPACADOR	ENTRETOISE AFSTANDSRING	DISTANZSTÜCK AFSTANDSSTYKKE	075D
23		896-15012		4	WASHER 13,5 x 28 x 4 mm ARANDELA	ROSETTA PIANA ANILHA	RONDELLE SLUITRING	SCHEIBE FLADSKIVE	9720
24		255803A2		AR	SHIM SUPLEMENTO	SPESSORE CALCO DE AFINACAO	CALE D'EPAISSEUR DIKTEPLAAT	EINSTELLSCHEIBCHEN MELLEMLAEG	198S

09-51		p1	12/04

HITCH - LOWER LIFT LINKS
ATTACCO - TIRANTI DI SOLLEVAMENTO INFERIORI
ATTELAGE - BARRES DE TRACTION
UNTERLENKER DES KRAFTHEBERS

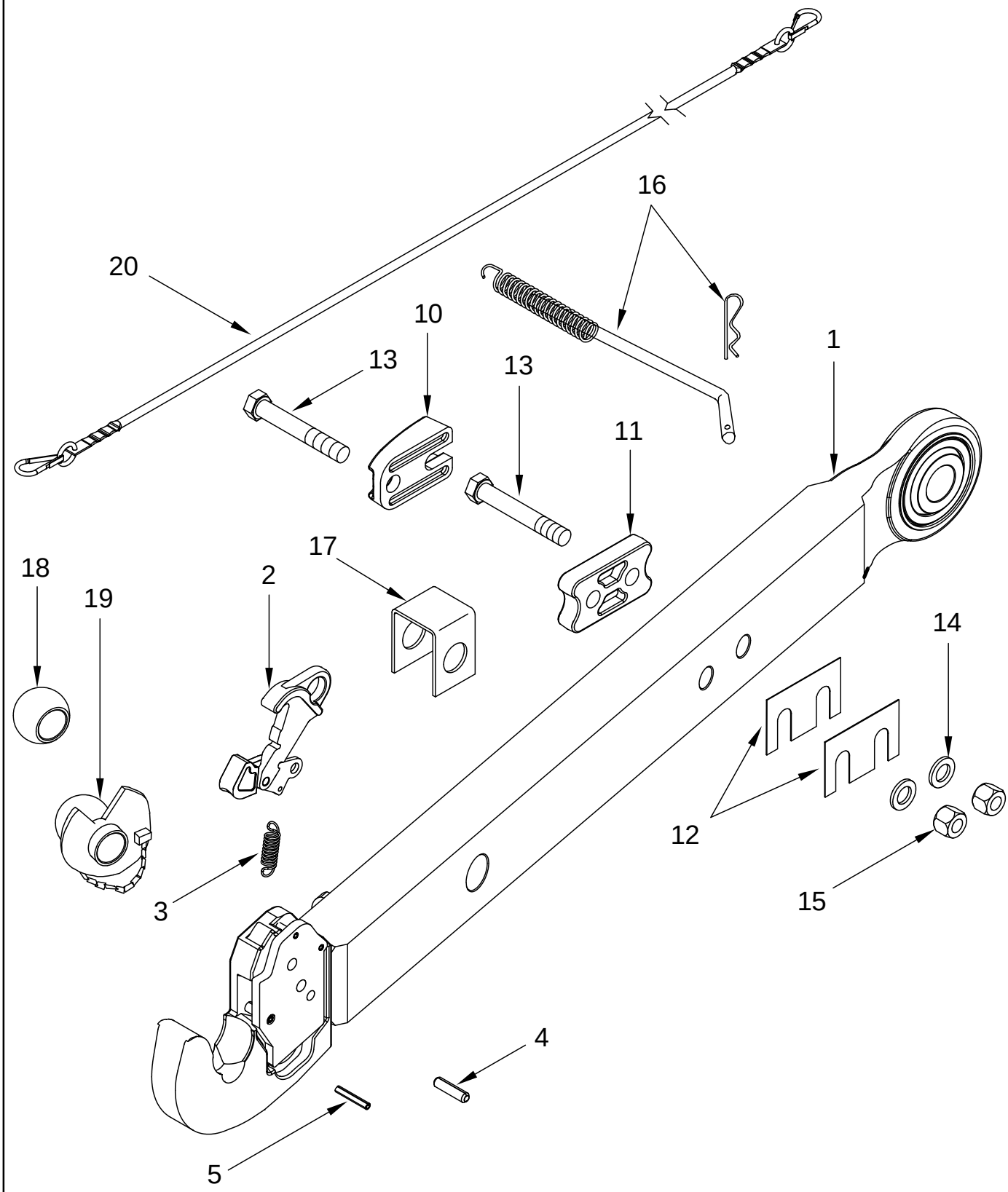

ENGANCHE - ARTICULACIONES DE ELEVACIÓN INFERIORES
ELOS DE ELEVAÇÃO INFERIORES DO ENGATE
HEFINRICHTING - ONDERSTE HEFVERBINDINGSSTUKKEN
TRÆK - NEDERSTE LØFTEFORBINDELSER

R	N	P.N.	MOD	Q	Description Denominacion	Descrizione Denominação	Description Beschrijving	Bezeichnung Beskrivelse	L.C.
		377975A1		1	LINK, LOWER Right Hand, Inc. 1 - 5				
						TIRANTE, INFERIORE	BRAS DE RELEVAGE	UNTERLENKER	P637
					BRAZO INFERIOR	ELO INFERIOR	LINK, LOWER	LINK, LOWER	
		377974A1		1	LINK, LOWER Left Hand, Inc. 1 - 5				
						TIRANTE, INFERIORE	BRAS DE RELEVAGE	UNTERLENKER	P637
					BRAZO INFERIOR	ELO INFERIOR	LINK, LOWER	LINK, LOWER	
1		NSS		1	NOT SERVICED SEPARATELY Link, Right Hand, Shown				
						NON FORNITO SEPARAT	NON FOURNI SEPAREMI	KEIN ERSATZTEIL	064N
					NO SE REPARA SEPARA	NOT SERVICED SEPARA	NIET ALLEEN VERKRIJG	NOT SERVICED SEPARA	
1		NSS		1	NOT SERVICED SEPARATELY Link, Left Hand				
						NON FORNITO SEPARAT	NON FOURNI SEPAREMI	KEIN ERSATZTEIL	064N
					NO SE REPARA SEPARA	NOT SERVICED SEPARA	NIET ALLEEN VERKRIJG	NOT SERVICED SEPARA	
2		370030A1		2	LATCH	CHIAVISTELLO	LOQUET	KLINKE	156C
					PESTILLO	TRINCO	KLINK	PAL	
3		357749A1		2	SPRING	MOLLA	RESSORT	FEDER	100M
					RESORTE	MOLA	VEER	FJEDER	
		370217A1		2	PIN, SPLIT (COTTER) Kit, Inc. 4, 5				
						COPPIGLIA	GOUPILLE	SPLINT	270C
					PASADOR ABIERTO	TROCO DE ABRIR	SPLITPEN	SPLITBOLT	
4		738-51040		2	PIN, ROLL 10 X 40 mm	SPINA ELASTICA	GOUPILLE ELASTIQUE	SPANNSTIFT	P613
					PASADOR TUBOLAR	TROCO	SPANSTIFT	SPLIT	
5		838-3640		4	PIN 6 x 40 mm	PERNO	AXE	BOLZEN	080P
					PERNO	PERNO	PEN	STIFT	
10		301248A2		2	BUMPER	PARAURTI	PARE-CHOCS	STOSSTANGE	036P
					PARACHOQUES	PARACHOQUES	SCHOKDEMPER	KOFANGER	
11		301927A1		2	SPACER	DISTANZIALE	ENTRETOISE	DISTANZSTÜCK	075D
					SEPARADOR	ESPACADOR	AFSTANDSRING	AFSTANDSSTYKKE	
12		189946A1		4	SHIM	SPESSORE	CALE D'EPAISSEUR	EINSTELLSCHEIBCHEN	198S
					SUPLEMENTO	CALCO DE AFINACAO	DIKTEPLAAT	MELLEMLAEG	
13		827-20130		4	SCREW M20 x 130; 10.9	VITE	VIS	SCHRAUBE	7450
					TORNILLO	PARAFUSO	SCHROEF	SKRUE	
14		896-11020		4	WASHER 22 x 37 x 4 mm	ROSETTA PIANA	RONDELLE	SCHEIBE	9720
					ARANDELA	ANILHA	SLUITRING	FLADSKIVE	
15		832-10420		4	NUT M20; 8	DADO	ECROU	MUTTER	010D
					TUERCA	PORCA	MOER	MØTRIK	
16		1252040C1		1	SPRING	MOLLA	RESSORT	FEDER	100M
					RESORTE	MOLA	VEER	FJEDER	
17		293002A1		2	SPACER	DISTANZIALE	ENTRETOISE	DISTANZSTÜCK	075D
					SEPARADOR	ESPACADOR	AFSTANDSRING	AFSTANDSSTYKKE	
18		359189A2		2	BALL JOINT 37.5 mm	GIUNTO SFERICO	ROTULE	KUGELGELENK	070G
					JUNTA DE ROTULA	JUNTA ESFÉRICA	KOGELGEWRICHT	KUGLELED	
19		381642A1		2	BALL 37.5 mm	SFERA	BILLE	BALL	140S
					BOLA	ESFERA	KOGEL	KUGLE	
20		1348076C1		1	CABLE	CAVO	CABLE	KABEL	650C
					CABLE	CABO	KABEL	KABEL	

09-52		p1	11/04

HITCH - SWAY LIMITER
ATTACCO - LIMITATORE DI OSCILLAZIONE
ATTELAGE - LIMITEUR DE DÉBATTEMENT
KRAFTHEBER - STABILISATOREN FÜR UNTERLENKER

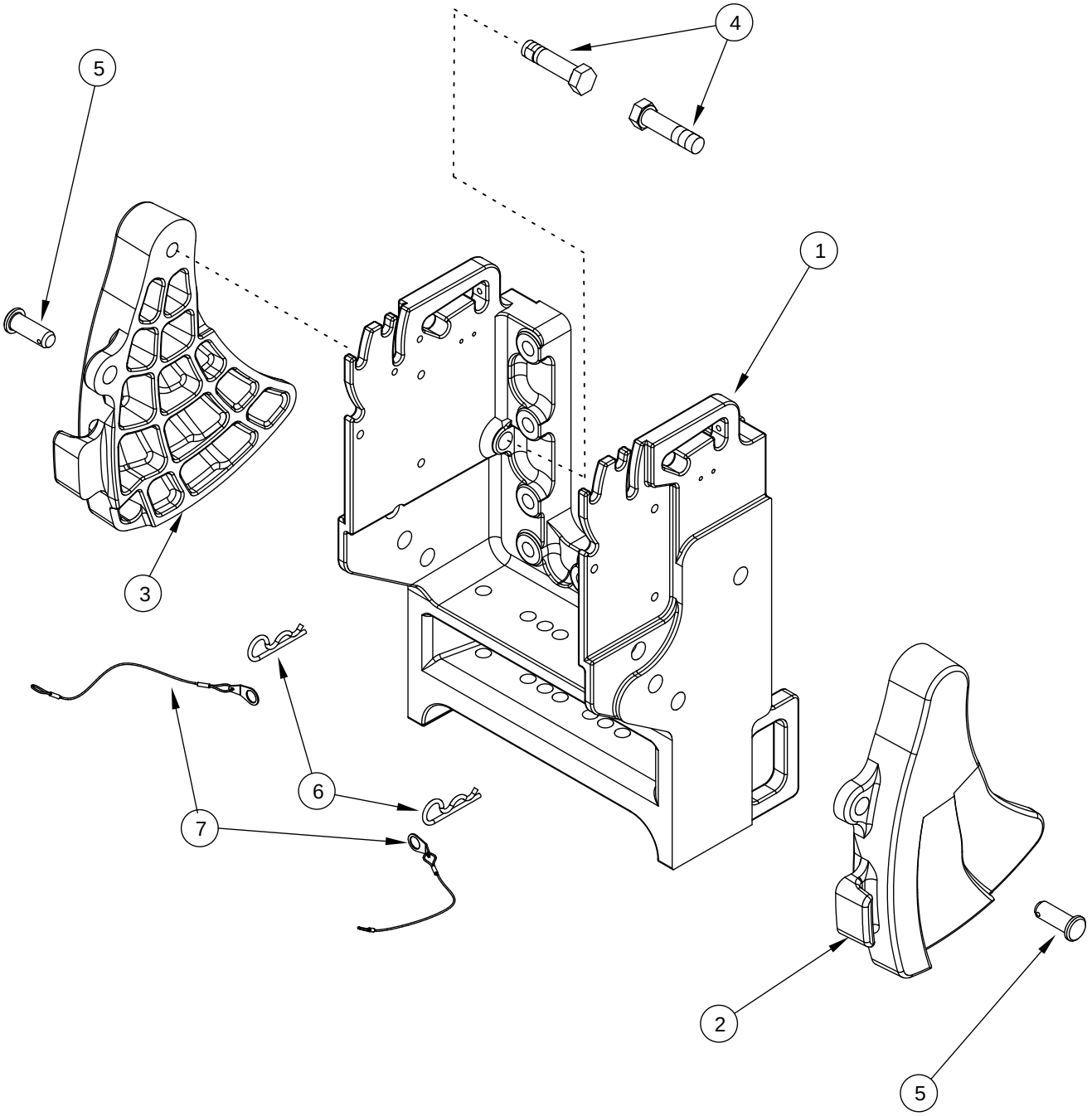

ENGANCHE - LIMITADOR DE OSCILACIÓN
LIMITADOR DE OSCILAÇÃO DO ENGATE
HEFINRICHTING - ZWENKBEGRENZER
TRÆK - SVAJEBEGRÆNSER

R	N	P.N.	MOD	Q	Description Denominacion	Descrizione Denominação	Description Beschrijving	Bezeichnung Beskrivelse	L.C.
1		251788A3		1	SUPPORT SOPORTE	SUPPORTO SUPORTE	SUPPORT STEUN	STÜTZE BESLAG	300S
2		293792A5		1	CAM Right Hand LEVA	CAMMA EXCENTRICO	CAME NOK	NOCKEN KAM	040C
3		293789A5		1	CAM Left Hand LEVA	CAMMA EXCENTRICO	CAME NOK	NOCKEN KAM	040C
4		804-20080		2	SCREW M20 x 80; 10,9 TORNILLO	VITE PARAFUSO	VIS SCHROEF	SCHRAUBE SKRUE	040V
5		439-11236		2	PIN 3/4 x 2-1/4 PERNO	PERNO PERNO	AXE PEN	BOLZEN STIFT	080P
6		1978738C1		2	PIN, SPLIT (COTTER) 3/16 PASADOR ABIERTO	COPPIGLIA TROCO DE ABRIR	GOUPILLE SPLITPEN	SPLINT SPLITBOLT	270C
7		336494A1		2	CHAIN Europe Only CADENA	CATENA CORRENTE	CHAINE KETTING	KETTE KÆDE	095C

09-53		p1	11/04

HITCH - POSITION SENSOR
ATTACCO - SENSORE DI POSIZIONE
ATTELAGE - CAPTEUR DE POSITION
LAGEREGELSENSOR

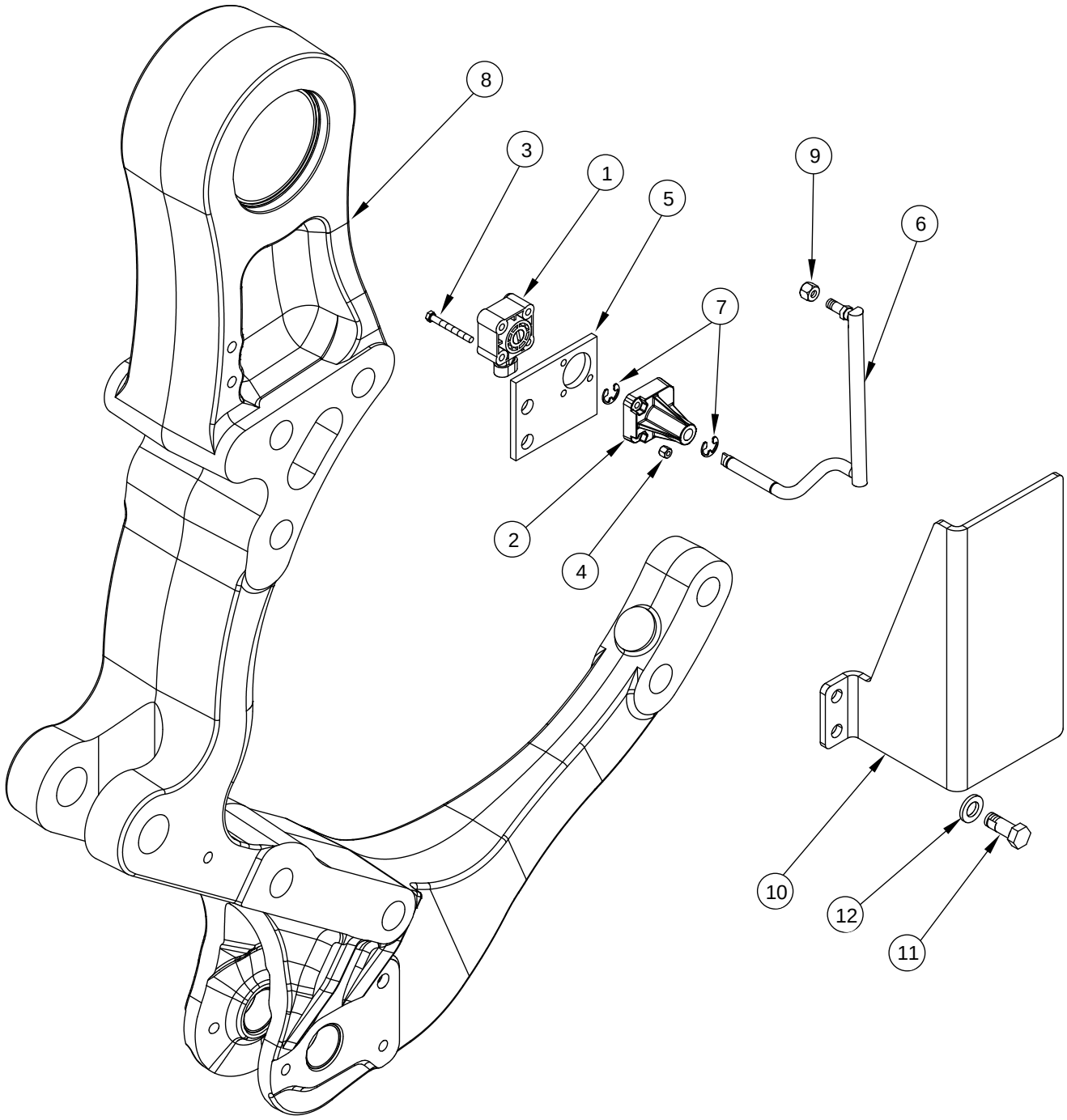

ENGANCHE - SENSOR DE POSICIÓN
SENSOR DA POSIÇÃO DO ENGATE
HEFINRICHTING - STANDSENSOR
TRÆK - POSITIONSFØLER

R	N	P.N.	MOD	Q	Description Denominacion	Descrizione Denominação	Description Beschrijving	Bezeichnung Beskrivelse	L.C.
1		283659A1		1	SENSOR SENSOR	SENSORE SENSOR	CAPTEUR SENSOR	SENSOR FØLER	608S
2		305020A2		1	BUSHING CASQUILLO	BOCCOLA CASQUILHO	BAGUE LAGERBUS	BUECHSE BOESNING	095B
3		614-5045		3	SCREW M5 x 45; 8.8 TORNILLO	VITE PARAFUSO	VIS SCHROEF	SCHRAUBE SKRUE	7450
4		832-10405		3	NUT M5 TUERCA	DADO PORCA	ECROU MOER	MUTTER MØTRIK	5780
5		300385A1		1	SUPPORT APOYADERO	SUPPORTO SUPORTE	SUPPORT SUPPORT	STUETZE SUPPORT	8790
6		242489A3		1	LINK, CONNECTING ESLABÓN DE CONEXIÓN	MAGLIA GIUNZIONE LIGADOR	MAILLON DE RACCORD KETTINGSCHAKEL	VERBINDUNGSGLIED KÆDSAMLELED	540M
7		800-4310		2	RING, SNAP 10 mm ANILLO DE RESORTE	ANELLO ELASTICO ANEL	ANNEAU D'ARRÊT RING, SNAP	SICHERUNGSRING LÅSERING	054A
8		302887A4		1	BRACKET PIEZA DE SOPORTE	STAFFA BRACADEIRA	PATTE FIXATION STEUNBEUGEL	HALTERUNG BESLAG	225S
9		832-10408		1	NUT M8; 8 TUERCA	DADO PORCA	ECROU MOER	MUTTER MØTRIK	010D
10		242543A5		1	PROTECTION PLATE CHAPA PROTECCION	PIASTRA, PROTETTIVA CHAPA PROTE O	TOLE-PROTECTION SHIELD	SCHUTZBLECH SHIELD	Z647
11		805-12030		2	SCREW M12 x 30; 10.9 TORNILLO	VITE PARAFUSO	VIS SCHROEF	SCHRAUBE SKRUE	7450
12		896-11012		2	WASHER 13,5 x 24 x 3 mm ARANDELA	ROSETTA PIANA ANILHA	RONDELLE SLUITRING	SCHEIBE FLADSKIVE	9720

09-54		p1	11/04

HITCH - DRAFT CONTROL PINS
ATTACCO - PERNI DI COMANDO DEL CARICO
ATTELAGE - BROCHES DE COMMANDE DE TRACTION
KRAFTHEBER-ZUGKRAFTREGELUNGSBOLZEN

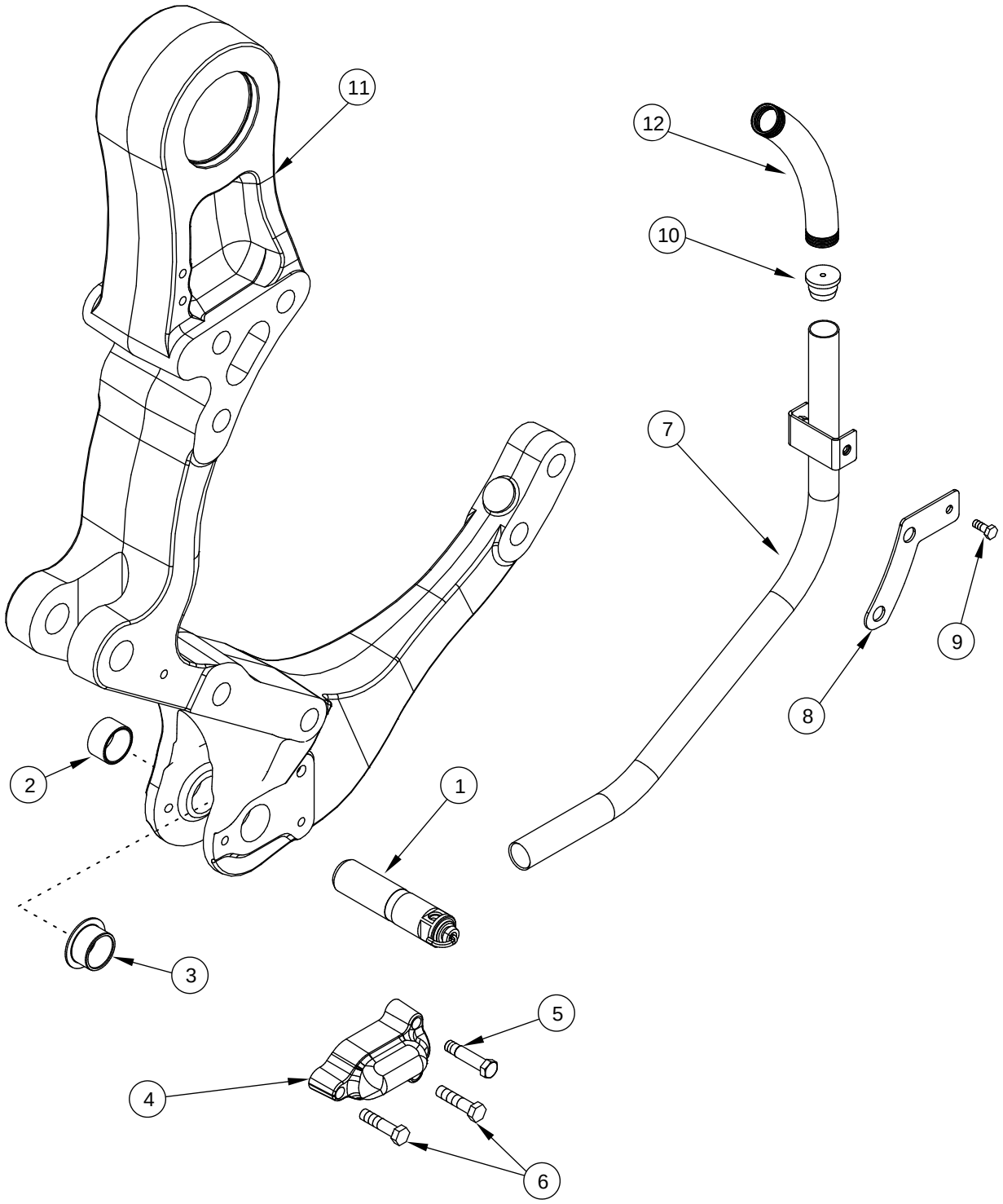

ENGANCHE - PASADORES DE CONTROL DE TIRO
PINOS DE CONTROLO DA TRACÇÃO DO ENGATE
HEFINRICHTING - PENNEN TREKKRACHTREGELING
TRÆK - BETJENINGSSPLITTER TIL KROGENS TRÆK

R	N	P.N.	MOD	Q	Description Denominacion	Descrizione Denominação	Description Beschrijving	Bezeichnung Beskrivelse	L.C.
		322022A1		2	KIT Repair, Inc. 1 - 3 JEUGO	KIT JOGO	POCHETTE KIT	PACKUNG KIT	4830
1		**NSS**		1	NOT SERVICED SEPARATELY Pin, Draft Control NO SE REPARA SEPARA	NON FORNITO SEPARAT NOT SERVICED SEPARA	NON FOURNI SEPAREMI NIET ALLEEN VERKRIJG	KEIN ERSATZTEIL NOT SERVICED SEPARA	064N
2		**1960223C1**		2	BUSHING CASQUILLO	BOCCOLA CASQUILHO	BAGUE LAGERBUS	BUECHSE BOESNING	095B
3		**303550A1**		1	BUSHING CASQUILLO	BOCCOLA CASQUILHO	BAGUE LAGERBUS	BUECHSE BOESNING	095B
4		**291895A4**		2	COVER TAPADERA	COPERCHIO COBERTA	COUVERCLE DEKSEL	DECKEL DÆKSEL	265C
5		**225643A1**		2	BOLT TORNILLO	BULLONE PARAFUSO	BOULON BOUT	SCHAUBENBOLZEN SKRUE	140B
6		**827-12050**		4	SCREW M12 x 50; 10.9 TORNILLO	VITE PARAFUSO	VIS SCHROEF	SCHRAUBE SKRUE	7450
7		**236897A2**		2	PIPE CUELLO DE CARGA	TUBO TUBO DE ENCHIMENTO	TUYAU OPVULPIJP	ROHR PAAFYLDNINGSSTUDS	200T
8		**229904A2**		2	SUPPORT SOPORTE	SUPPORTO SUPORTE	SUPPORT STEUN	STÜTZE BESLAG	300S
9		**614-8020**		2	SCREW M8 x 20; 8.8 TORNILLO	VITE PARAFUSO	VIS SCHROEF	SCHRAUBE SKRUE	P136
10		**1960765C2**		2	GROMMET PASACABLES	ANELLO PASSACAVO CASQUILHO ISOLADOR	PASSE-FIL KABELDOORGANG	TÜLLE RING	131A
11		**302887A4**		2	BRACKET PIEZA DE SOPORTE	STAFFA BRACADEIRA	PATTE FIXATION STEUNBEUGEL	HALTERUNG BESLAG	225S
12		**326827A1**		2	SLEEVE BUJE	BUSSOLA CANHAO	DOUILLE LAGERBUS	BUCHSE BOESNING	145B

09-55		p1	11/04

TRAILER HITCH - MANUAL PIN, FRANCE ONLY (CRAMER)
ATTACCO DEL RIMORCHIO - PERNO MANUALE, SOLO PER LA FRANCIA (CRAMER)
ATTELAGE DE LA REMORQUE - BROCHE MANUELLE, FRANCE UNIQUEMENT (CRAMER)
ANHÄNGERKUPPLUNG - HANDBOLZEN, NUR FRANKREICH (CRAMER)

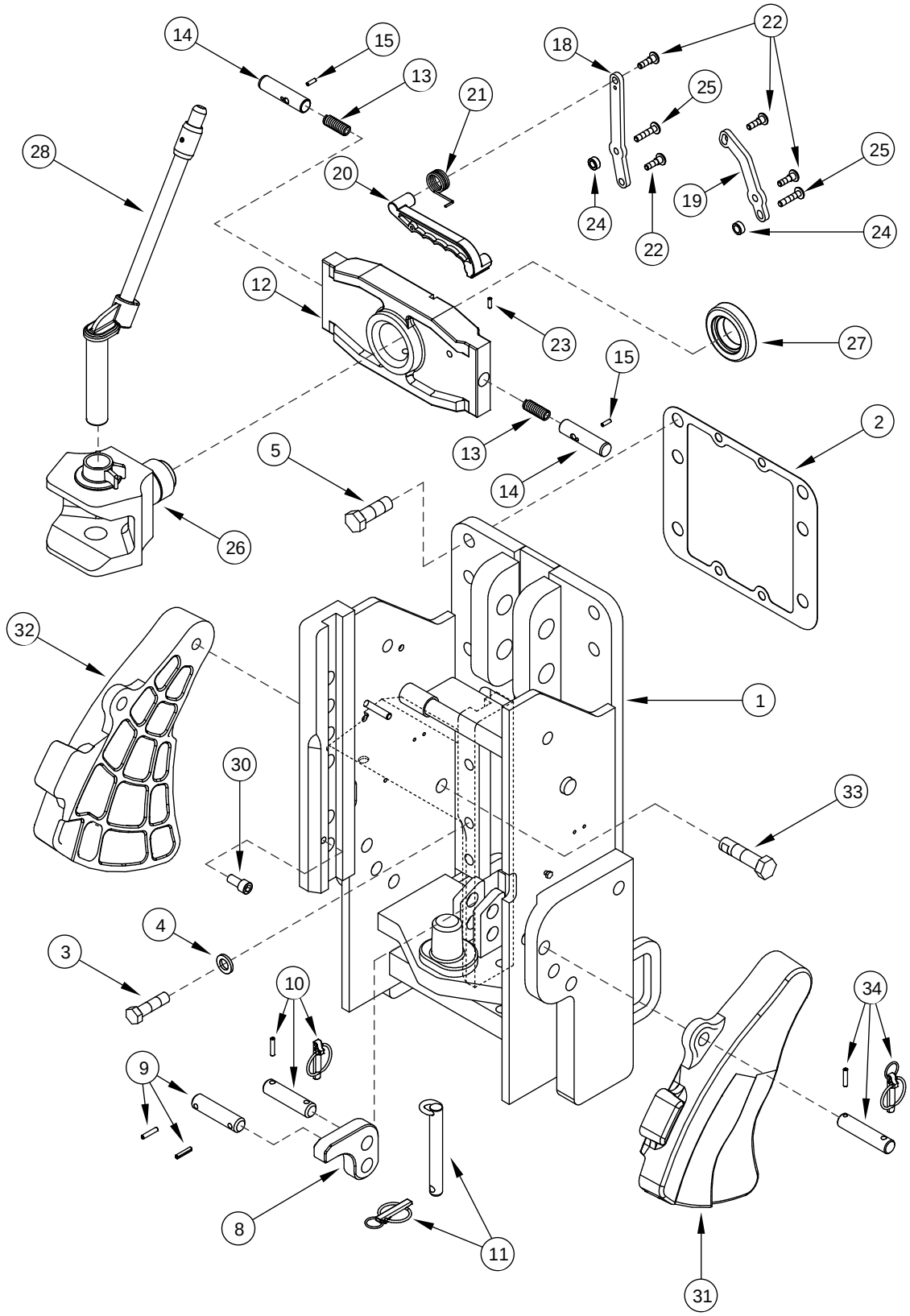

ENGANCHE DEL REMOLQUE - PASADOR MANUAL, SÓLO FRANCIA (CRAMER)
PINO MANUAL DO ENGATE DO REBOQUE, APENAS NA FRANÇA (CRAMER)
TREKHAAK OPLEGGER - HANDPEN, UITSLUITEND FRANKRIJK (CRAMER)
ANHÆNGERTRÆK - MANUEL SPLIT, KUN FRANKRIG (CRAMER)

R	N	P.N.	MOD	Q	Description Denominacion	Descrizione Denominação	Description Beschrijving	Bezeichnung Beskrivelse	L.C.
1	1	314327A5		1	FRAME BASTIDOR	TELAIO ESTRUTURA	CHASSIS RAAM	GESTELL RAMME	077T
1	2	314329A5		1	FRAME BASTIDOR	TELAIO ESTRUTURA	CHASSIS RAAM	GESTELL RAMME	077T
2		379145A1		1	GASKET JUNTA HERMETICA	GUARNIZIONE JUNTA	JOINT DICHTINGSSTUK	DICHTUNG, FLACH PAKNING	123G
3		828-16060		8	SCREW M16 x 60; 10.9 TORNILLO	VITE PARAFUSO	VIS SCHROEF	SCHRAUBE SKRUE	7450
4		896-12016		8	WASHER 17,5 x 30 x 4 mm ARANDELA	ROSETTA PIANA ANILHA	RONDELLE SLUITRING	SCHEIBE FLADSKIVE	9720
5		628-20060		6	SCREW M20 x 60; 10.9 TORNILLO	VITE PARAFUSO	VIS SCHROEF	SCHRAUBE SKRUE	7450
8		141035A2		1	LATCH PESTILLO	CHIAVISTELLO TRINCO	LOQUET KLINK	KLINKE PAL	156C
9		141036A1		1	PIN, LARGE BULON/PIN, LARGO	SPINA, GRANDE PINO LARGO	AXE, GROS PIN, LARGE	BOLZEN, GROSS STOR PIND	Z009
10		141038A1		1	PIN, LARGE BULON/PIN, LARGO	SPINA, GRANDE PINO LARGO	AXE, GROS PIN, LARGE	BOLZEN, GROSS STOR PIND	Z009
11		333337A1		2	PIN, HITCH PASADOR DE ENGANCH	PERNO DELL'ATTACCO PINO	AXE D'ATTELAGE PIN, HITCH	KUPPLUNGSBOLZEN TRÆKKROGSPIND	P740
		299135A2		1	HITCH ASSY, TRAILER Inc. 12 - 27 ENGACHE (CONJUNTO)	ATTACCO, RIMORCHIO ENGATE	ATTELAGE HITCH ASSY, TRAILER	ANHAENGERKUPPLUNG HITCH ASSY, TRAILER	P428
12		NSS		1	NOT SERVICED SEPARATELY Support NO SE REPARA SEPARA	NON FORNITO SEPARAT NOT SERVICED SEPARA	NON FOURNI SEPAREMI NIET ALLEEN VERKRIJG	KEIN ERSATZTEIL NOT SERVICED SEPARA	064N
13		141013A1		2	SPRING RESORTE	MOLLA MOLA	RESSORT VEER	FEDER FJEDER	100M
14		141014A1		2	PIN PERNO	PERNO PERNO	AXE PEN	BOLZEN STIFT	080P
15		738-1516		2	SPLIT PIN/SAFETY PIN 5 x 16 mm PASADOR	PERNO DIVISO PINO	GOUPILLE SPLIT PIN/SAFETY PIN	SPLINT/STIFT SPLIT PIN/SAFETY PIN	Z510
		141015A1		1	HANDLE Inc. 18 - 25 MANECILLA	MANIGLIA MANIPULO	POIGNÉE HENDEL	HANDGRIFF HAANDTAG	020M
18		NSS		1	NOT SERVICED SEPARATELY Bar NO SE REPARA SEPARA	NON FORNITO SEPARAT NOT SERVICED SEPARA	NON FOURNI SEPAREMI NIET ALLEEN VERKRIJG	KEIN ERSATZTEIL NOT SERVICED SEPARA	064N
19		NSS		1	NOT SERVICED SEPARATELY Bar NO SE REPARA SEPARA	NON FORNITO SEPARAT NOT SERVICED SEPARA	NON FOURNI SEPAREMI NIET ALLEEN VERKRIJG	KEIN ERSATZTEIL NOT SERVICED SEPARA	064N
20		NSS		1	NOT SERVICED SEPARATELY Handle NO SE REPARA SEPARA	NON FORNITO SEPARAT NOT SERVICED SEPARA	NON FOURNI SEPAREMI NIET ALLEEN VERKRIJG	KEIN ERSATZTEIL NOT SERVICED SEPARA	064N
21		NSS		1	NOT SERVICED SEPARATELY Spring NO SE REPARA SEPARA	NON FORNITO SEPARAT NOT SERVICED SEPARA	NON FOURNI SEPAREMI NIET ALLEEN VERKRIJG	KEIN ERSATZTEIL NOT SERVICED SEPARA	064N

(1) With 35 mm (1-3/8 inch) PTO Shaft
(2) With 45 mm (1-3/4 inch) PTO Shaft

09-55		p2	11/04

TRAILER HITCH - MANUAL PIN, FRANCE ONLY (CRAMER)
ATTACCO DEL RIMORCHIO - PERNO MANUALE, SOLO PER LA FRANCIA (CRAMER)
ATTELAGE DE LA REMORQUE - BROCHE MANUELLE, FRANCE UNIQUEMENT (CRAMER)
ANHÄNGERKUPPLUNG - HANDBOLZEN, NUR FRANKREICH (CRAMER)

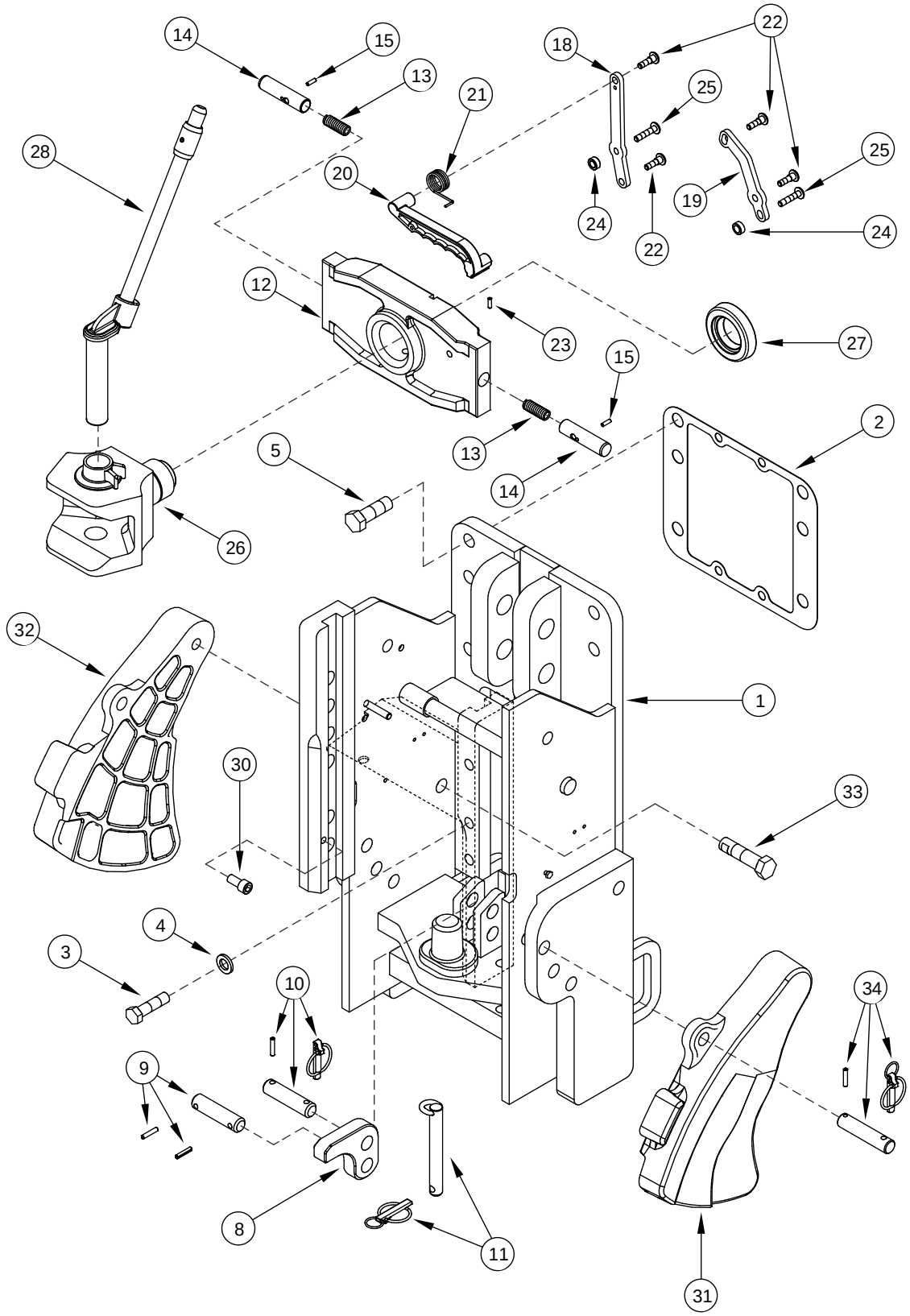

ENGANCHE DEL REMOLQUE - PASADOR MANUAL, SÓLO FRANCIA (CRAMER)
PINO MANUAL DO ENGATE DO REBOQUE, APENAS NA FRANÇA (CRAMER)
TREKHAAK OPLEGGER - HANDPEN, UITSLUITEND FRANKRIJK (CRAMER)
ANHÆNGERTRÆK - MANUEL SPLIT, KUN FRANKRIG (CRAMER)

R	N	P.N.	MOD	Q	Description Denominacion	Descrizione Denominação	Description Beschrijving	Bezeichnung Beskrivelse	L.C.
22		NSS		4	NOT SERVICED SEPARATELY Pin				
						NON FORNITO SEPARAT	NON FOURNI SEPAREMI	KEIN ERSATZTEIL	064N
					NO SE REPARA SEPARA	NOT SERVICED SEPARA	NIET ALLEEN VERKRIJG	NOT SERVICED SEPARA	
23		738-1516		2	SPLIT PIN/SAFETY PIN 5 x 16 mm				
						PERNO DIVISO	GOUPILLE	SPLINT/STIFT	Z510
					PASADOR	PINO	SPLIT PIN/SAFETY PIN	SPLIT PIN/SAFETY PIN	
24		NSS		2	NOT SERVICED SEPARATELY Spacer				
						NON FORNITO SEPARAT	NON FOURNI SEPAREMI	KEIN ERSATZTEIL	064N
					NO SE REPARA SEPARA	NOT SERVICED SEPARA	NIET ALLEEN VERKRIJG	NOT SERVICED SEPARA	
25		NSS		2	NOT SERVICED SEPARATELY Pin				
						NON FORNITO SEPARAT	NON FOURNI SEPAREMI	KEIN ERSATZTEIL	064N
					NO SE REPARA SEPARA	NOT SERVICED SEPARA	NIET ALLEEN VERKRIJG	NOT SERVICED SEPARA	
26		NSS		1	NOT SERVICED SEPARATELY Clevis				
						NON FORNITO SEPARAT	NON FOURNI SEPAREMI	KEIN ERSATZTEIL	064N
					NO SE REPARA SEPARA	NOT SERVICED SEPARA	NIET ALLEEN VERKRIJG	NOT SERVICED SEPARA	
27		NSS		1	NOT SERVICED SEPARATELY Retainer				
						NON FORNITO SEPARAT	NON FOURNI SEPAREMI	KEIN ERSATZTEIL	064N
					NO SE REPARA SEPARA	NOT SERVICED SEPARA	NIET ALLEEN VERKRIJG	NOT SERVICED SEPARA	
28		333336A1		1	PIN, CLEVIS	SPINA, PER FORCELLA	AXE DE CHAPE	GABELSTIFT	P694
					PASADOR DE HORQUILL	CUPILHA	PIN, CLEVIS	GAFFELBOLT	
30		864-12025		1	SCREW M12 x 25	VITE	VIS	SCHRAUBE	7450
					TORNILLO	PARAFUSO	SCHROEF	SKRUE	
31		293792A5		1	CAM Right Hand	CAMMA	CAME	NOCKEN	040C
					LEVA	EXCENTRICO	NOK	KAM	
32		293789A5		1	CAM Left Hand	CAMMA	CAME	NOCKEN	040C
					LEVA	EXCENTRICO	NOK	KAM	
33		804-20080		2	SCREW M20 x 80; 10.9	VITE	VIS	SCHRAUBE	040V
					TORNILLO	PARAFUSO	SCHROEF	SKRUE	
34		320986A2		2	PIN, LARGE	SPINA, GRANDE	AXE, GROS	BOLZEN, GROSS	Z009
					BULON/PIN, LARGO	PINO LARGO	PIN, LARGE	STOR PIND	

09-56		p1	11/04

TRAILER HITCH - MANUAL PIN, FRANCE ONLY (CBM)
ATTACCO DEL RIMORCHIO - PERNO MANUALE, SOLO PER LA FRANCIA (CBM)
ATTELAGE DE LA REMORQUE - BROCHE MANUELLE, FRANCE UNIQUEMENT (CBM)
ANHÄNGERKUPPLUNG - HANDBOLZEN, NUR FRANKREICH (CBM)

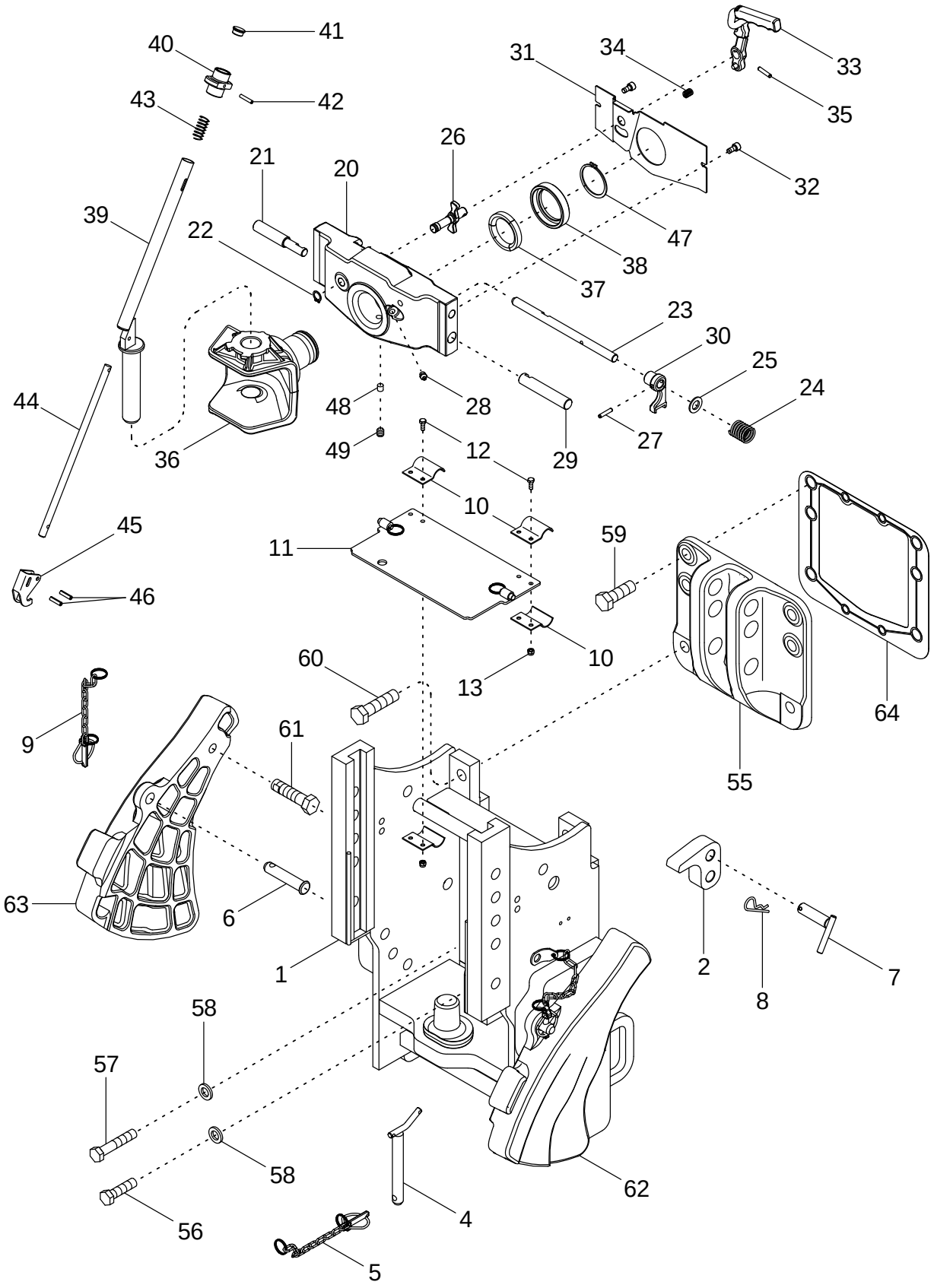

ENGANCHE DEL REMOLQUE - PASADOR MANUAL, SÓLO FRANCIA (CBM)
PINO MANUAL DO ENGATE DO REBOQUE, APENAS NA FRANÇA (CBM)
TREKHAAK OPLEGGER - HANDPEN, UITSLUITEND FRANKRIJK (CBM)
ANHÆNGERTRÆK - MANUEL SPLIT, KUN FRANKRIG (CBM)

R	N	P.N.	MOD	Q	Description Denominacion	Descrizione Denominação	Description Beschrijving	Bezeichnung Beskrivelse	L.C.
	1	86989555		1	FRAME ASSY Inc. 1 - 13 BASTIDOR (CONJUNTO)	GRUPPO TELAIO ESTRUTURA CONJUNTO	BATI (ASSEMBLE) FRAME ASSY	RAHMEN (KPLT.) FRAME ASSY	P432
	2	86989553		1	FRAME ASSY Inc 1 - 13 BASTIDOR (CONJUNTO)	GRUPPO TELAIO ESTRUTURA CONJUNTO	BATI (ASSEMBLE) FRAME ASSY	RAHMEN (KPLT.) FRAME ASSY	P432
1	1	86989556		1	FRAME ASSY BASTIDOR (CONJUNTO)	GRUPPO TELAIO ESTRUTURA CONJUNTO	BATI (ASSEMBLE) FRAME ASSY	RAHMEN (KPLT.) FRAME ASSY	P432
1	2	86989554		1	FRAME ASSY BASTIDOR (CONJUNTO)	GRUPPO TELAIO ESTRUTURA CONJUNTO	BATI (ASSEMBLE) FRAME ASSY	RAHMEN (KPLT.) FRAME ASSY	P432
2		86990333		1	LATCH PESTILLO	CHIAVISTELLO TRINCO	LOQUET KLINK	KLINKE PAL	156C
		449061A1		2	PIN ASSY. Inc. 4, 5 PASADOR (CONJUNTO)	GRUPPO SPINA PINO CONJUNTO	CHEVILLE (ASSEMBLEE) PIN ASSY.	STIFT (KPLT.) PIN ASSY.	P524
4		450465A1		1	PIN PERNO	PERNO PERNO	AXE PEN	BOLZEN STIFT	080P
5		449060A1		1	CHAIN CADENA	CATENA CORRENTE	CHAINE KETTING	KETTE KÆDE	095C
6		449067A1		2	PIN PERNO	PERNO PERNO	AXE PEN	BOLZEN STIFT	080P
7		86989584		2	PIN ASSY. PASADOR (CONJUNTO)	GRUPPO SPINA PINO CONJUNTO	CHEVILLE (ASSEMBLEE) PIN ASSY.	STIFT (KPLT.) PIN ASSY.	P524
8		86990465		2	PIN, SPLIT (COTTER) PASADOR ABIERTO	COPPIGLIA TROCO DE ABRIR	GOUPILLE SPLITPEN	SPLINT SPLITBOLT	270C
9		449060A1		2	CHAIN CADENA	CATENA CORRENTE	CHAINE KETTING	KETTE KÆDE	095C
10		449066A1		4	PLATE PLACA	PIASTRA CHAPA	PLAQUE PLAAT	PLATTE PLADE	105P
11	1	449070A1		1	GUARD ASSY. GUARDA (CONJUNTO)	GRUPPO PROTEZIONE PROTECTOR CONJUNTO	GARANT (ASSEMBLE) GUARD ASSY.	SCHUTZ (KPLT.) GUARD ASSY.	P539
11	2	449062A1		1	GUARD ASSY. GUARDA (CONJUNTO)	GRUPPO PROTEZIONE PROTECTOR CONJUNTO	GARANT (ASSEMBLE) GUARD ASSY.	SCHUTZ (KPLT.) GUARD ASSY.	P539
12		614-6020		4	BOLT M6 x 20; 8.8 TORNILLO	BULLONE PARAFUSO	BOULON BOUT	SCHAUBENBOLZEN SKRUE	140B
13		832-10406		4	NUT M6; 8 TUERCA	DADO PORCA	ECROU MOER	MUTTER MØTRIK	5780
		86989557		1	CLEVIS Inc. 20 - 49 HORQUILLA PEQUENA	FORCELLINO FORQUILHA	FOURCHETTE GAFFEL	GABELKOPF GAFFELBOLT	084F
		450612A1		1	FRAME ASSY Inc. 20 - 30 BASTIDOR (CONJUNTO)	GRUPPO TELAIO ESTRUTURA CONJUNTO	BATI (ASSEMBLE) FRAME ASSY	RAHMEN (KPLT.) FRAME ASSY	P432
20		450613A1		1	FRAME BASTIDOR	TELAIO ESTRUTURA	CHASSIS RAAM	GESTELL RAMME	077T
21		86984635		1	PIN PERNO	PERNO PERNO	AXE PEN	BOLZEN STIFT	080P
22		86990332		1	CIRCLIP RETENEDOR	ANELLO DI RITEGNO FREIO DE MOLA	CIRCLIP BORGVEER	HALTERING LAASERING	056A
23		86984638		1	PLATE PLACA	PIASTRA CHAPA	PLAQUE PLAAT	PLATTE PLADE	105P

(1) With 35 mm (1-3/8 inch) PTO Shaft
(2) With 45 mm (1-3/4 inch) PTO Shaft

09-56		p2	11/04

TRAILER HITCH - MANUAL PIN, FRANCE ONLY (CBM)
ATTACCO DEL RIMORCHIO - PERNO MANUALE, SOLO PER LA FRANCIA (CBM)
ATTELAGE DE LA REMORQUE - BROCHE MANUELLE, FRANCE UNIQUEMENT (CBM)
ANHÄNGERKUPPLUNG - HANDBOLZEN, NUR FRANKREICH (CBM)

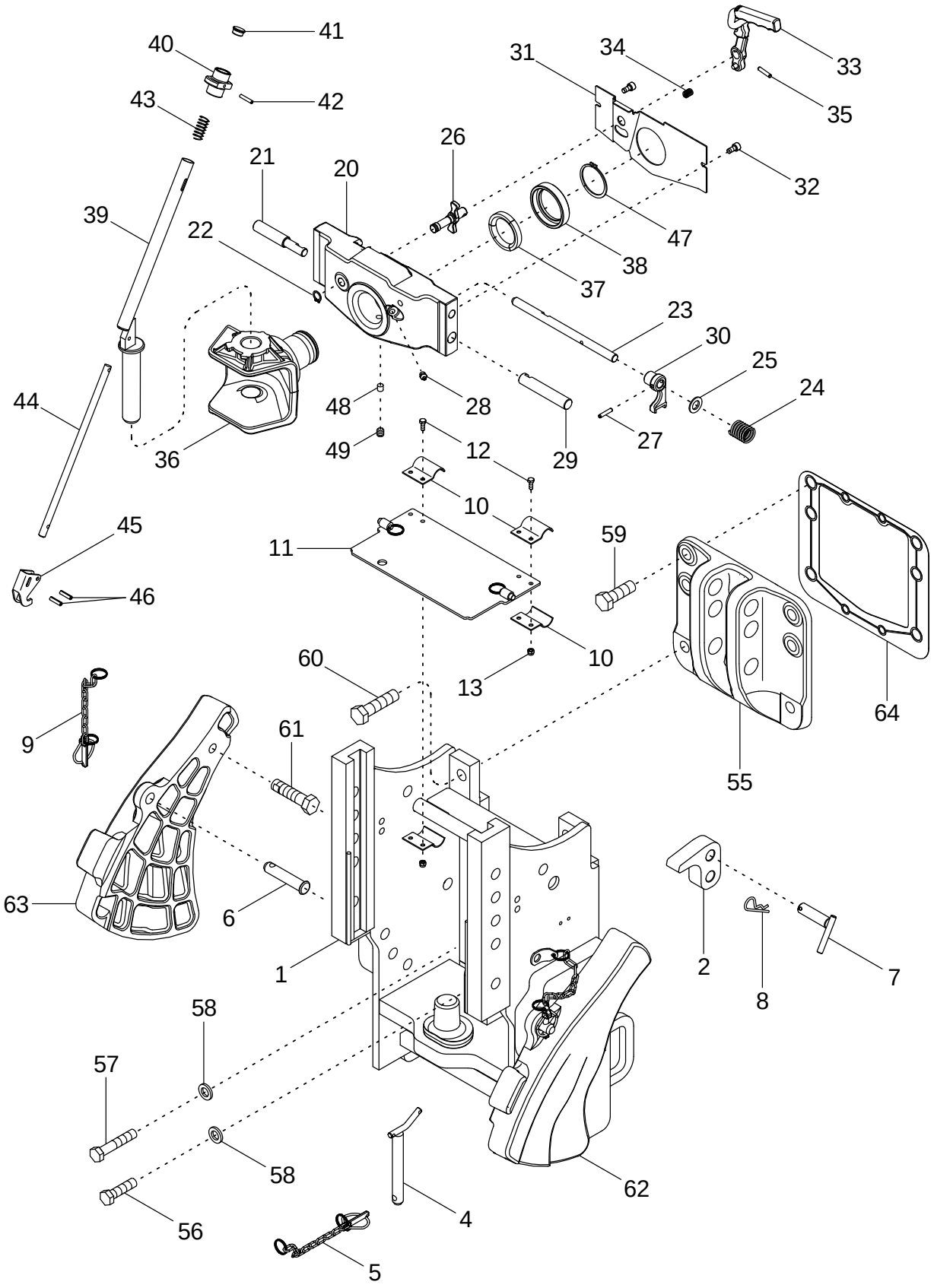

ENGANCHE DEL REMOLQUE - PASADOR MANUAL, SÓLO FRANCIA (CBM)
PINO MANUAL DO ENGATE DO REBOQUE, APENAS NA FRANÇA (CBM)
TREKHAAK OPLEGGER - HANDPEN, UITSLUITEND FRANKRIJK (CBM)
ANHÆNGERTRÆK - MANUEL SPLIT, KUN FRANKRIG (CBM)

R	N	P.N.	MOD	Q	Description Denominacion	Descrizione Denominação	Description Beschrijving	Bezeichnung Beskrivelse	L.C.
24		86984626		1	SPRING, COMPRESSION MUELLE COMPRESOR	MOLLA, COMPRESSIONE MOLA DE COMPRESAO	RESSORT DE COMPRES SPRING, COMPRESSION	DRUCKFEDER SPRING, COMPRESSION	Z641
25		896-11014		1	WASHER 15,5 x 28 x 3 mm ARANDELA	ROSETTA PIANA ANILHA	RONDELLE SLUITRING	SCHEIBE FLADSKIVE	9720
26		451837A1		1	PIN PERNO	PERNO PERNO	AXE PEN	BOLZEN STIFT	080P
27		838-3630		1	PIN PERNO	PERNO PERNO	AXE PEN	BOLZEN STIFT	6200
28		1974039C1		1	FITTING CONEXION	RACCORDO CONEXAO	RACCORD FITTING	ANSCHLUSSSTÜCK FITTING	3300
29		86984640		1	PIN PERNO	PERNO PERNO	AXE PEN	BOLZEN STIFT	080P
30		86984632		1	PIN PERNO	PERNO PERNO	AXE PEN	BOLZEN STIFT	080P
31		86988189		1	PLATE PLACA	PIASTRA CHAPA	PLAQUE PLAAT	PLATTE PLADE	105P
32		614-6012		2	SCREW M6 x 12; 8.8 TORNILLO	VITE PARAFUSO	VIS SCHROEF	SCHRAUBE SKRUE	7450
33		86984629		1	LEVER PALANCA	LEVA ALAVANCA	LEVIER HEFBOOM	HEBEL HAANDTAG	045L
34		86988211		1	SPRING RESORTE	MOLLA MOLA	RESSORT VEER	FEDER FJEDER	100M
35		838-3630		1	PIN PERNO	PERNO PERNO	AXE PEN	BOLZEN STIFT	6200
36		86989565		1	CLEVIS HORQUILLA PEQUENA	FORCELLINO FORQUILHA	FOURCHETTE GAFFEL	GABELKOPF GAFFELBOLT	084F
37		86985916		1	COLLAR ABRAZADERA	FASCETTA COLAR	COLLIER SPANKRAAG	FLANSCH SLANGEBAAND	031F
38		86988005		1	BUSHING CASQUILLO	BOCCOLA CASQUILHO	BAGUE LAGERBUS	BUECHSE BOESNING	095B
		86989558		1	PIN ASSY. Inc. 39 - 46 PASADOR (CONJUNTO)	GRUPPO SPINA PINO CONJUNTO	CHEVILLE (ASSEMBLEE) PIN ASSY.	STIFT (KPLT.) PIN ASSY.	P524
39		NSS		1	NOT SERVICED SEPARATELY Pin NO SE REPARA SEPARA	NON FORNITO SEPARAT NOT SERVICED SEPARA	NON FOURNI SEPAREMI NIET ALLEEN VERKRIJG	KEIN ERSATZTEIL NOT SERVICED SEPARA	064N
40		86989562		1	PIN ASSY. PASADOR (CONJUNTO)	GRUPPO SPINA PINO CONJUNTO	CHEVILLE (ASSEMBLEE) PIN ASSY.	STIFT (KPLT.) PIN ASSY.	P524
41		86989564		1	PIN ASSY. PASADOR (CONJUNTO)	GRUPPO SPINA PINO CONJUNTO	CHEVILLE (ASSEMBLEE) PIN ASSY.	STIFT (KPLT.) PIN ASSY.	P524
42		838-3528		1	SPLIT PIN/SAFETY PIN 5 x 28 mm PASADOR	PERNO DIVISO PINO	GOUPILLE SPLIT PIN/SAFETY PIN	SPLINT/STIFT SPLIT PIN/SAFETY PIN	Z510
43		86989563		1	PIN ASSY. PASADOR (CONJUNTO)	GRUPPO SPINA PINO CONJUNTO	CHEVILLE (ASSEMBLEE) PIN ASSY.	STIFT (KPLT.) PIN ASSY.	P524
44		86989560		1	PIN ASSY. PASADOR (CONJUNTO)	GRUPPO SPINA PINO CONJUNTO	CHEVILLE (ASSEMBLEE) PIN ASSY.	STIFT (KPLT.) PIN ASSY.	P524
45		86989561		1	PIN ASSY. PASADOR (CONJUNTO)	GRUPPO SPINA PINO CONJUNTO	CHEVILLE (ASSEMBLEE) PIN ASSY.	STIFT (KPLT.) PIN ASSY.	P524

09-56		p3	11/04

TRAILER HITCH - MANUAL PIN, FRANCE ONLY (CBM)
ATTACCO DEL RIMORCHIO - PERNO MANUALE, SOLO PER LA FRANCIA (CBM)
ATTELAGE DE LA REMORQUE - BROCHE MANUELLE, FRANCE UNIQUEMENT (CBM)
ANHÄNGERKUPPLUNG - HANDBOLZEN, NUR FRANKREICH (CBM)

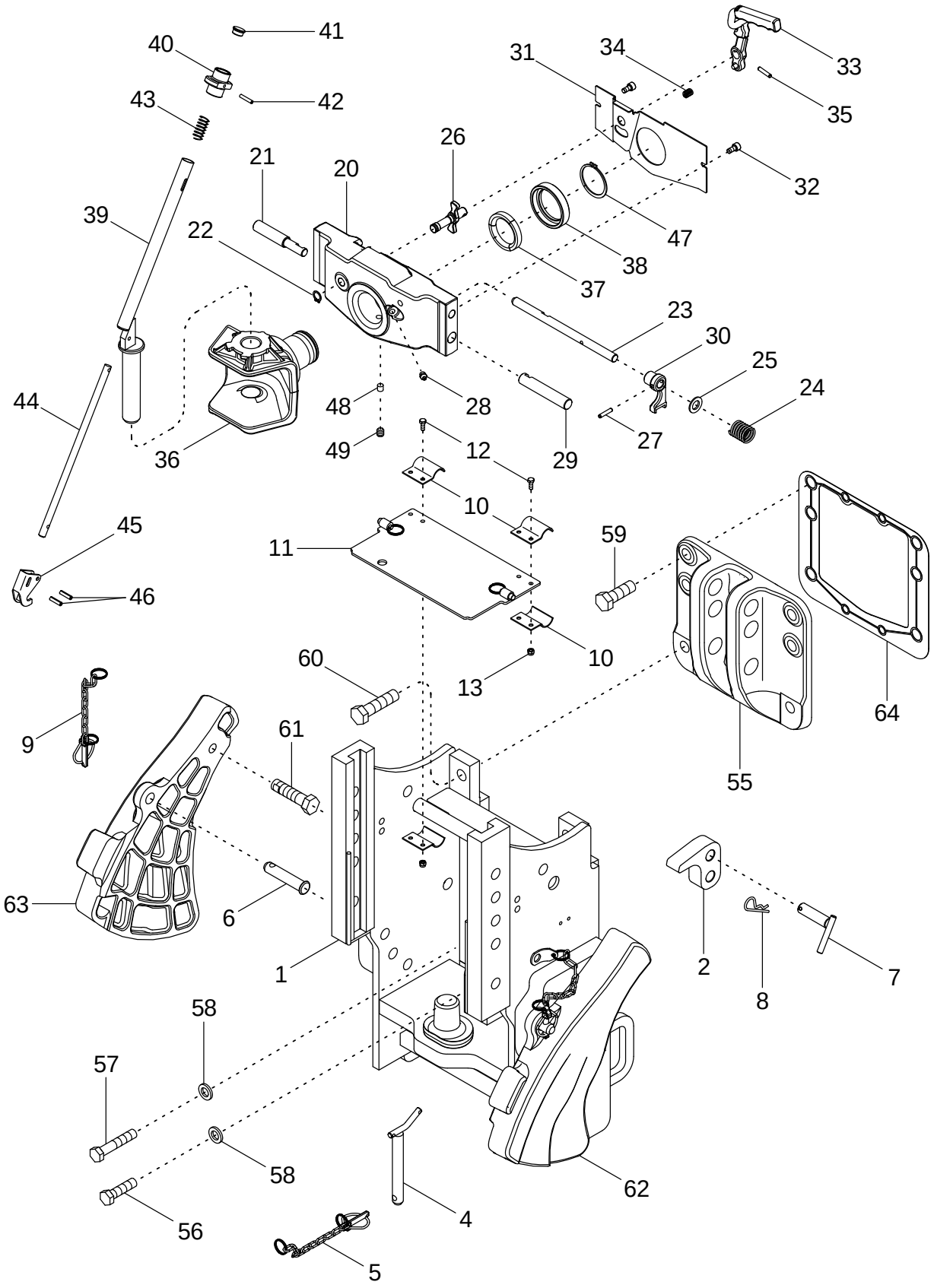

ENGANCHE DEL REMOLQUE - PASADOR MANUAL, SÓLO FRANCIA (CBM)
PINO MANUAL DO ENGATE DO REBOQUE, APENAS NA FRANÇA (CBM)
TREKHAAK OPLEGGER - HANDPEN, UITSLUITEND FRANKRIJK (CBM)
ANHÆNGERTRÆK - MANUEL SPLIT, KUN FRANKRIG (CBM)

R	N	P.N.	MOD	Q	Description Denominacion	Descrizione Denominação	Description Beschrijving	Bezeichnung Beskrivelse	L.C.
46		838-3625		2	PIN, SPLIT (COTTER) PASADOR ABIERTO	COPPIGLIA TROCO DE ABRIR	GOUPILLE SPLITPEN	SPLINT SPLITBOLT	P160
47		800-1160		1	CIRCLIP RETENEDOR	ANELLO DI RITEGNO FREIO DE MOLA	CIRCLIP BOORGVEER	HALTERING LÃSERING	P019
48		86990448		1	LINING REVESTEMIENTO	RIVESTIMENTO REVESTIMENTO	GARNITURE LINING	BELAG FORING	5260
49		877-31212		1	SET SCREW M12 x 12 TORNILLO DE AJUSTE	VITE DI FERMO TORNILLO DE AJUSTE	VIS DE RÉGLAGE KRACHTBRON	STELLSCHRAUBE PINOLSKRUE	P327
55		377206A2		1	SUPPORT SOPORTE	SUPPORTO SUPORTE	SUPPORT STEUN	STÜTZE BESLAG	300S
56		828-16060		6	SCREW M16 x 60; 10.9 TORNILLO	VITE PARAFUSO	VIS SCHROEF	SCHRAUBE SKRUE	7450
57		828-16085		2	SCREW M16 x 85; 10 9 TORNILLO	VITE PARAFUSO	VIS SCHROEF	SCHRAUBE SKRUE	7450
58		896-12016		8	WASHER 17.5 x 30 x 4 mm ARANDELA	ROSETTA PIANA ANILHA	RONDELLE SLUITRING	SCHEIBE FLADSKIVE	9720
59		628-20060		4	SCREW M20 x 60; 10.9 TORNILLO	VITE PARAFUSO	VIS SCHROEF	SCHRAUBE SKRUE	7450
60		828-20080		2	SCREW M20 x 80; 10.9 TORNILLO	VITE PARAFUSO	VIS SCHROEF	SCHRAUBE SKRUE	7450
61		804-20080		2	SCREW M20 x 80; 10.9 TORNILLO	VITE PARAFUSO	VIS SCHROEF	SCHRAUBE SKRUE	040V
62		293792A5		1	CAM Right Hand LEVA	CAMMA EXCENTRICO	CAME NOK	NOCKEN KAM	040C
63		293789A5		1	CAM Left Hand LEVA	CAMMA EXCENTRICO	CAME NOK	NOCKEN KAM	040C
64		379145A2		1	GASKET JUNTA HERMETICA	GUARNIZIONE JUNTA	JOINT DICHTINGSSTUK	DICHTUNG, FLACH PAKNING	123G

09-57		p1	11/04

TRAILER HITCH - AUTO CLEVIS, GERMANY ONLY (CRAMER)
ATTACCO DEL RIMORCHIO - MANIGLIONE CON PERNO AUTOMATICO, SOLO PER LA GERMANIA (CRAMER)
ATTELAGE DE LA REMORQUE - CHAPE AUTOMATIQUE, ALLEMAGNE UNIQUEMENT (CRAMER)
ANHÄNGERKUPPLUNG - AUTOMATISCHE GABEL, NUR DEUTSCHLAND (CRAMER)

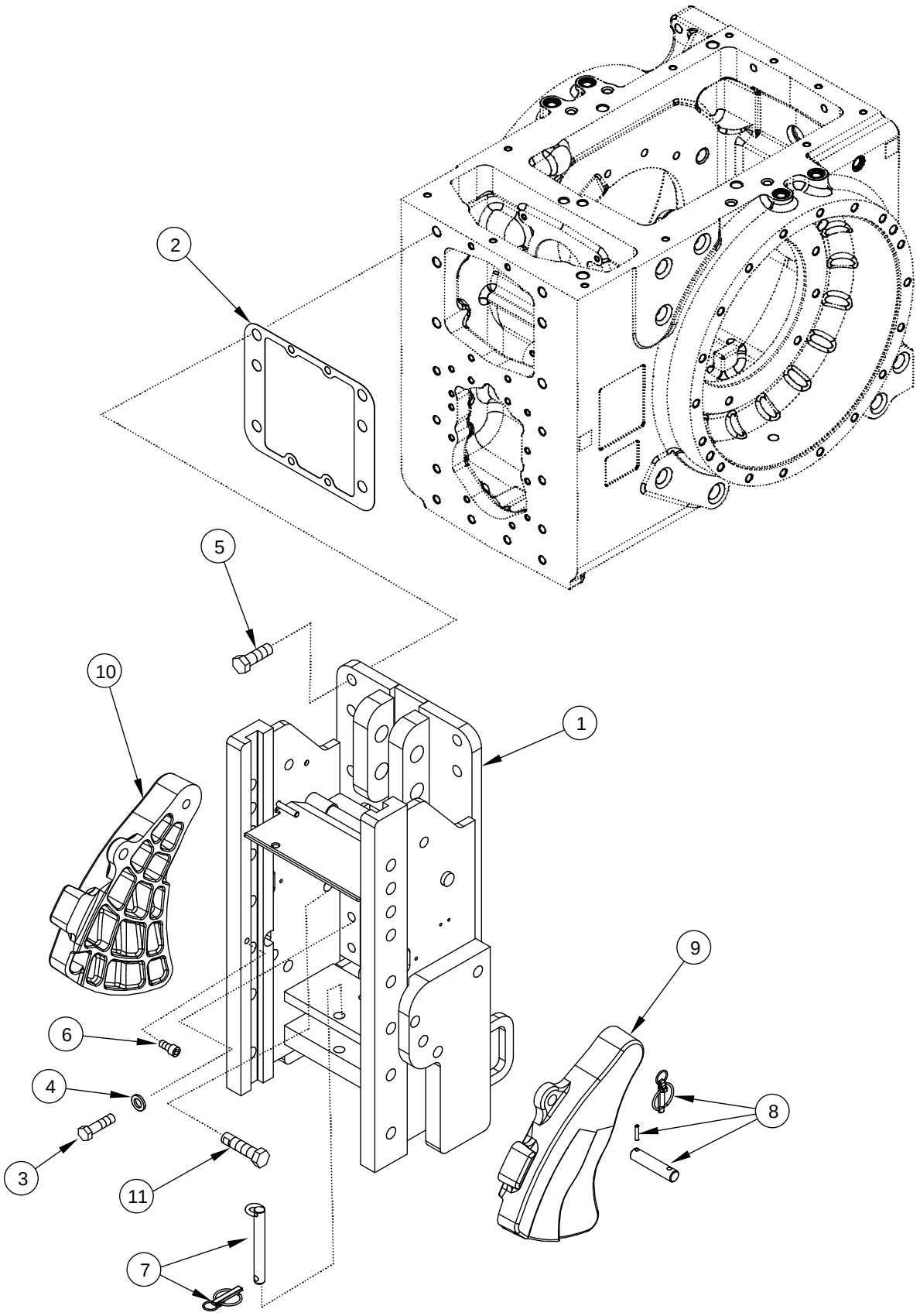

ENGANCHE DEL REMOLQUE - GANCHO AUTOMÁTICO, SÓLO ALEMANIA (CRAMER)
FORQUILHA AUTOMÁTICA DO ENGATE DO REBOQUE, APENAS NA ALEMANHA (CRAMER)
TREKHAAK OPLEGGER - AUTO-GAFFEL, UITSLUITEND DUITSLAND (CRAMER)
ANHÆNGERTRÆK - MANUEL TRÆKBØJLE, KUN TYSKLAND (CRAMER)

R	N	P.N.	MOD	Q	Description Denominacion	Descrizione Denominação	Description Beschrijving	Bezeichnung Beskrivelse	L.C.
1	1	314326A5		1	FRAME BASTIDOR	TELAIO ESTRUTURA	CHASSIS RAAM	GESTELL RAMME	077T
1	2	314328A5		1	FRAME BASTIDOR	TELAIO ESTRUTURA	CHASSIS RAAM	GESTELL RAMME	077T
2		379145A1		1	GASKET JUNTA HERMETICA	GUARNIZIONE JUNTA	JOINT DICHTINGSSTUK	DICHTUNG, FLACH PAKNING	123G
3		828-16060		8	SCREW M16 x 60; 10.9 TORNILLO	VITE PARAFUSO	VIS SCHROEF	SCHRAUBE SKRUE	7450
4		896-12016		8	WASHER 17,5 x 30 x 4 mm ARANDELA	ROSETTA PIANA ANILHA	RONDELLE SLUITRING	SCHEIBE FLADSKIVE	9720
5		628-20060		6	SCREW M20 x 60; 10.9 TORNILLO	VITE PARAFUSO	VIS SCHROEF	SCHRAUBE SKRUE	7450
6		864-12025		1	SCREW M12 x 25 TORNILLO	VITE PARAFUSO	VIS SCHROEF	SCHRAUBE SKRUE	7450
7		333337A1		2	PIN, HITCH PASADOR DE ENGANCH	PERNO DELL'ATTACCO PINO	AXE D'ATTELAGE PIN, HITCH	KUPPLUNGSBOLZEN TRÆKKROGSPIND	P740
8		320986A1		2	PIN, LARGE BULON/PIN, LARGO	SPINA, GRANDE PINO LARGO	AXE, GROS PIN, LARGE	BOLZEN, GROSS STOR PIND	Z009
9		293792A5		1	CAM Right Hand LEVA	CAMMA EXCENTRICO	CAME NOK	NOCKEN KAM	040C
10		293789A5		1	CAM Left Hand LEVA	CAMMA EXCENTRICO	CAME NOK	NOCKEN KAM	040C
11		804-20080		2	SCREW M20 x 80; 10.9 TORNILLO	VITE PARAFUSO	VIS SCHROEF	SCHRAUBE SKRUE	040V

(1) With 35 mm (1-3/8 inch) PTO Shaft
(2) With 45 mm (1-3/4 inch) PTO Shaft

09-58		p1	11/04

TRAILER HITCH - AUTO CLEVIS, 37 MM, GERMANY ONLY (CRAMER)
ATTACCO DEL RIMORCHIO - MANIGLIONE CON PERNO AUTOMATICO, 37 MM, SOLO PER LA GERMANIA (CRAMER)
ATTELAGE DE LA REMORQUE - CHAPE AUTOMATIQUE, 37 MM, ALLEMAGNE UNIQUEMENT (CRAMER)
ANHÄNGERKUPPLUNG - 37 MM-AUTOMATISCHE GABEL, NUR DEUTSCHLAND (CRAMER)

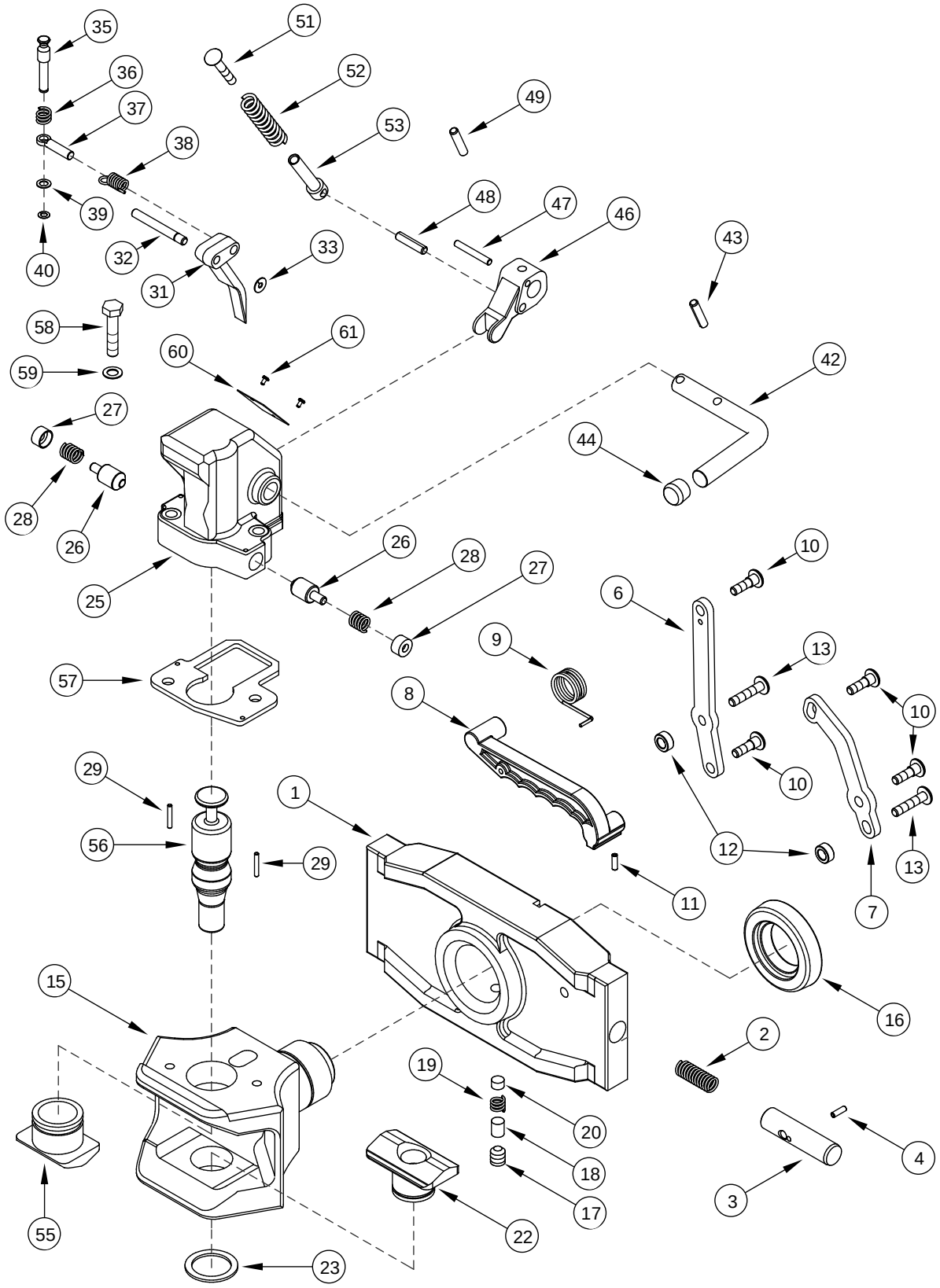

ENGANCHE DEL REMOLQUE - GANCHO AUTOMÁTICO, 37 MM, SÓLO ALEMANIA (CRAMER)
FORQUILHA AUTOMÁTICA (37 MM) DO ENGATE DO REBOQUE, APENAS NA ALEMANHA (CRAMER)
TREKHAAK OPLEGGER - AUTO-GAFFEL, 37 MM, UITSLUITEND DUITSLAND (CRAMER)
ANHÆNGERTRÆK - MANUEL TRÆKBØJLE, 37 MM, KUN TYSKLAND (CRAMER)

R	N	P.N.	MOD	Q	Description Denominacion	Descrizione Denominação	Description Beschrijving	Bezeichnung Beskrivelse	L.C.
		428391A1		1	HITCH, TRAILER 37 mm, Inc. 1 - 61				
						ATTACCO,RIMORCHIO	CHAPE D'ATTELAGE	ZUGMAUL	Z015
					ABRAZADERA ENGACHE	ENGATE CONJUNTO	HITCH, TRAILER	HITCH, TRAILER	
1		NSS		1	NOT SERVICED SEPARATELY Support				
						NON FORNITO SEPARAT	NON FOURNI SEPAREMI	KEIN ERSATZTEIL	064N
					NO SE REPARA SEPARA	NOT SERVICED SEPARA	NIET ALLEEN VERKRIJG	NOT SERVICED SEPARA	
2		141013A1		2	SPRING	MOLLA	RESSORT	FEDER	100M
					RESORTE	MOLA	VEER	FJEDER	
3		141014A1		2	PIN	PERNO	AXE	BOLZEN	080P
					PERNO	PERNO	PEN	STIFT	
4		738-1516		2	SPLIT PIN/SAFETY PIN 5 x 16 mm				
						PERNO DIVISO	GOUPILLE	SPLINT/STIFT	Z510
					PASADOR	PINO	SPLIT PIN/SAFETY PIN	SPLIT PIN/SAFETY PIN	
		141015A1		1	HANDLE Inc. 6 - 13	MANIGLIA	POIGNÉE	HANDGRIFF	020M
					MANECILLA	MANIPULO	HENDEL	HAANDTAG	
6		141016A1		1	BAR	BARRA	BARRE	STAB	530B
					BARRA	BARRA	STAAF	BJÆLKE	
7		141017A1		1	BAR	BARRA	BARRE	STAB	0500
					BARRA	BARRA	STAAF	BJÆKE	
8		141018A1		1	LEVER	LEVA	LEVIER	HEBEL	5110
					PALANCA	ALAVANCA	HEFBOOM	HAANDTAG	
9		141019A1		1	SPRING	MOLLA	RESSORT	FEDER	8315
					RESORTE	MOLA	VEER	FJEDER	
10		141020A1		4	PIN, HEADED	PERNO CON TESTA	AXE A TÊTE	KOPFSTIFT	P888
					EJE CON CABEZA	PINO COM CABECA	PIN, HEADED	SPLIT MED HOVED	
11		738-1516		2	SPLIT PIN/SAFETY PIN 5 x 16 mm				
						PERNO DIVISO	GOUPILLE	SPLINT/STIFT	Z510
					PASADOR	PINO	SPLIT PIN/SAFETY PIN	SPLIT PIN/SAFETY PIN	
12		141021A1		2	SPACER	DISTANZIALE	ENTRETOISE	DISTANZSTÜCK	8090
					ESPACIADOR	ESPACADOR	AFSTANDSRING	AFSTANDSSTYKKE	
13		141022A1		2	PIN, HEADED	PERNO CON TESTA	AXE A TÊTE	KOPFSTIFT	P888
					EJE CON CABEZA	PINO COM CABECA	PIN, HEADED	SPLIT MED HOVED	
15		NSS		1	NOT SERVICED SEPARATELY Clevis				
						NON FORNITO SEPARAT	NON FOURNI SEPAREMI	KEIN ERSATZTEIL	064N
					NO SE REPARA SEPARA	NOT SERVICED SEPARA	NIET ALLEEN VERKRIJG	NOT SERVICED SEPARA	
16		NSS		1	NOT SERVICED SEPARATELY Retainer				
						NON FORNITO SEPARAT	NON FOURNI SEPAREMI	KEIN ERSATZTEIL	064N
					NO SE REPARA SEPARA	NOT SERVICED SEPARA	NIET ALLEEN VERKRIJG	NOT SERVICED SEPARA	
		177336A1		1	PIN, LARGE Inc. 17 - 20	SPINA, GRANDE	AXE, GROS	BOLZEN, GROSS	Z009
					BULON/PIN, LARGO	PINO LARGO	PIN, LARGE	STOR PIND	
17		NSS		1	NOT SERVICED SEPARATELY Screw				
						NON FORNITO SEPARAT	NON FOURNI SEPAREMI	KEIN ERSATZTEIL	064N
					NO SE REPARA SEPARA	NOT SERVICED SEPARA	NIET ALLEEN VERKRIJG	NOT SERVICED SEPARA	
18		NSS		1	NOT SERVICED SEPARATELY Pin				
						NON FORNITO SEPARAT	NON FOURNI SEPAREMI	KEIN ERSATZTEIL	064N
					NO SE REPARA SEPARA	NOT SERVICED SEPARA	NIET ALLEEN VERKRIJG	NOT SERVICED SEPARA	
19		NSS		1	NOT SERVICED SEPARATELY Spring				
						NON FORNITO SEPARAT	NON FOURNI SEPAREMI	KEIN ERSATZTEIL	064N
					NO SE REPARA SEPARA	NOT SERVICED SEPARA	NIET ALLEEN VERKRIJG	NOT SERVICED SEPARA	

09-58		p2	11/04

TRAILER HITCH - AUTO CLEVIS, 37 MM, GERMANY ONLY (CRAMER)
ATTACCO DEL RIMORCHIO - MANIGLIONE CON PERNO AUTOMATICO, 37 MM, SOLO PER LA GERMANIA (CRAMER)
ATTELAGE DE LA REMORQUE - CHAPE AUTOMATIQUE, 37 MM, ALLEMAGNE UNIQUEMENT (CRAMER)
ANHÄNGERKUPPLUNG - 37 MM-AUTOMATISCHE GABEL, NUR DEUTSCHLAND (CRAMER)

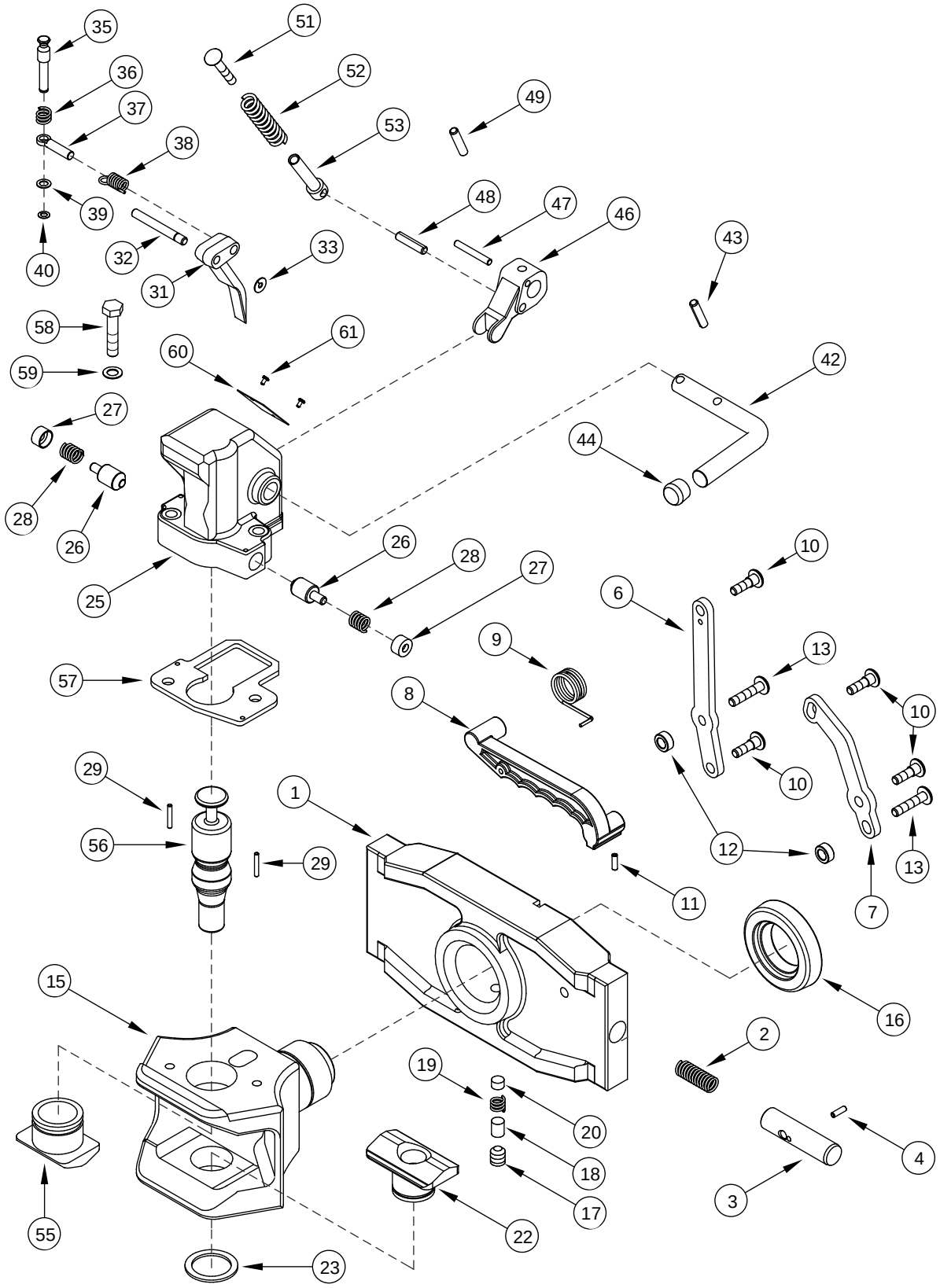

ENGANCHE DEL REMOLQUE - GANCHO AUTOMÁTICO, 37 MM, SÓLO ALEMANIA (CRAMER)
FORQUILHA AUTOMÁTICA (37 MM) DO ENGATE DO REBOQUE, APENAS NA ALEMANHA (CRAMER)
TREKHAAK OPLEGGER - AUTO-GAFFEL, 37 MM, UITSLUITEND DUITSLAND (CRAMER)
ANHÆNGERTRÆK - MANUEL TRÆKBØJLE, 37 MM, KUN TYSKLAND (CRAMER)

R	N	P.N.	MOD	Q	Description Denominacion	Descrizione Denominação	Description Beschrijving	Bezeichnung Beskrivelse	L.C.
20		NSS		1	NOT SERVICED SEPARATELY Block				
						NON FORNITO SEPARAT	NON FOURNI SEPAREMI	KEIN ERSATZTEIL	064N
					NO SE REPARA SEPARA	NOT SERVICED SEPARA	NIET ALLEEN VERKRIJG	NOT SERVICED SEPARA	
22		310112A1		1	BUSHING 37 mm	BOCCOLA	BAGUE	BUECHSE	095B
					CASQUILLO	CASQUILHO	LAGERBUS	BOESNING	
23		3057331R1		1	RING, SNAP 40 x 2,5 mm	ANELLO ELASTICO	ANNEAU D'ARRÊT	SICHERUNGSRING	054A
					ANILLO DE RESORTE	ANEL	RING, SNAP	LÅSERING	
		310188A2		1	LATCH ASSY. 37 mm, Inc. 25 - 56				
						GRUPPO DISP.CHIUS.	VERROU-BLOCAGE ASS	RIEGEL (KPLT.)	P464
					CERROJO (CONJUNTO)	TRINCO CONJUNTO	LATCH ASSY.	LATCH ASSY.	
25		NSS		1	NOT SERVICED SEPARATELY Housing				
						NON FORNITO SEPARAT	NON FOURNI SEPAREMI	KEIN ERSATZTEIL	064N
					NO SE REPARA SEPARA	NOT SERVICED SEPARA	NIET ALLEEN VERKRIJG	NOT SERVICED SEPARA	
26		NSS		2	NOT SERVICED SEPARATELY Pin				
						NON FORNITO SEPARAT	NON FOURNI SEPAREMI	KEIN ERSATZTEIL	064N
					NO SE REPARA SEPARA	NOT SERVICED SEPARA	NIET ALLEEN VERKRIJG	NOT SERVICED SEPARA	
27		NSS		2	NOT SERVICED SEPARATELY Retainer				
						NON FORNITO SEPARAT	NON FOURNI SEPAREMI	KEIN ERSATZTEIL	064N
					NO SE REPARA SEPARA	NOT SERVICED SEPARA	NIET ALLEEN VERKRIJG	NOT SERVICED SEPARA	
28		NSS		2	NOT SERVICED SEPARATELY Spring				
						NON FORNITO SEPARAT	NON FOURNI SEPAREMI	KEIN ERSATZTEIL	064N
					NO SE REPARA SEPARA	NOT SERVICED SEPARA	NIET ALLEEN VERKRIJG	NOT SERVICED SEPARA	
29		NSS		2	NOT SERVICED SEPARATELY Pin				
						NON FORNITO SEPARAT	NON FOURNI SEPAREMI	KEIN ERSATZTEIL	064N
					NO SE REPARA SEPARA	NOT SERVICED SEPARA	NIET ALLEEN VERKRIJG	NOT SERVICED SEPARA	
		310130A1		1	LEVER ASSY. Inc. 31-33	LEVA, COMPLESSIVO	LEVIER (ASSEMBLE)	HEBEL (KPLT.)	P520
					PALANCA (CONJUNTO)	ALAVANCA CONJUNTO	LEVER ASSY.	LEVER ASSY.	
31		NSS		1	NOT SERVICED SEPARATELY Lever				
						NON FORNITO SEPARAT	NON FOURNI SEPAREMI	KEIN ERSATZTEIL	064N
					NO SE REPARA SEPARA	NOT SERVICED SEPARA	NIET ALLEEN VERKRIJG	NOT SERVICED SEPARA	
32		310135A1		1	SPLIT PIN/SAFETY PIN	PERNO DIVISO	GOUPILLE	SPLINT/STIFT	Z510
					PASADOR	PINO	SPLIT PIN/SAFETY PIN	SPLIT PIN/SAFETY PIN	
33		800-416		1	CIRCLIP	ANELLO DI RITEGNO	CIRCLIP	HALTERING	P019
					RETENEDOR	FREIO DE MOLA	BOORGVEER	LÃSERING	
		310139A1		1	PIN Inc. 35 - 40	PERNO	AXE	BOLZEN	080P
					PERNO	PERNO	PEN	STIFT	
35		NSS		1	NOT SERVICED SEPARATELY Pin				
						NON FORNITO SEPARAT	NON FOURNI SEPAREMI	KEIN ERSATZTEIL	064N
					NO SE REPARA SEPARA	NOT SERVICED SEPARA	NIET ALLEEN VERKRIJG	NOT SERVICED SEPARA	
36		NSS		1	NOT SERVICED SEPARATELY Spring				
						NON FORNITO SEPARAT	NON FOURNI SEPAREMI	KEIN ERSATZTEIL	064N
					NO SE REPARA SEPARA	NOT SERVICED SEPARA	NIET ALLEEN VERKRIJG	NOT SERVICED SEPARA	
37		NSS		1	NOT SERVICED SEPARATELY Clevis				
						NON FORNITO SEPARAT	NON FOURNI SEPAREMI	KEIN ERSATZTEIL	064N
					NO SE REPARA SEPARA	NOT SERVICED SEPARA	NIET ALLEEN VERKRIJG	NOT SERVICED SEPARA	
38		NSS		1	NOT SERVICED SEPARATELY Spring				
						NON FORNITO SEPARAT	NON FOURNI SEPAREMI	KEIN ERSATZTEIL	064N
					NO SE REPARA SEPARA	NOT SERVICED SEPARA	NIET ALLEEN VERKRIJG	NOT SERVICED SEPARA	

09-58		p3	11/04

TRAILER HITCH - AUTO CLEVIS, 37 MM, GERMANY ONLY (CRAMER)
ATTACCO DEL RIMORCHIO - MANIGLIONE CON PERNO AUTOMATICO, 37 MM, SOLO PER LA GERMANIA (CRAMER)
ATTELAGE DE LA REMORQUE - CHAPE AUTOMATIQUE, 37 MM, ALLEMAGNE UNIQUEMENT (CRAMER)
ANHÄNGERKUPPLUNG - 37 MM-AUTOMATISCHE GABEL, NUR DEUTSCHLAND (CRAMER)

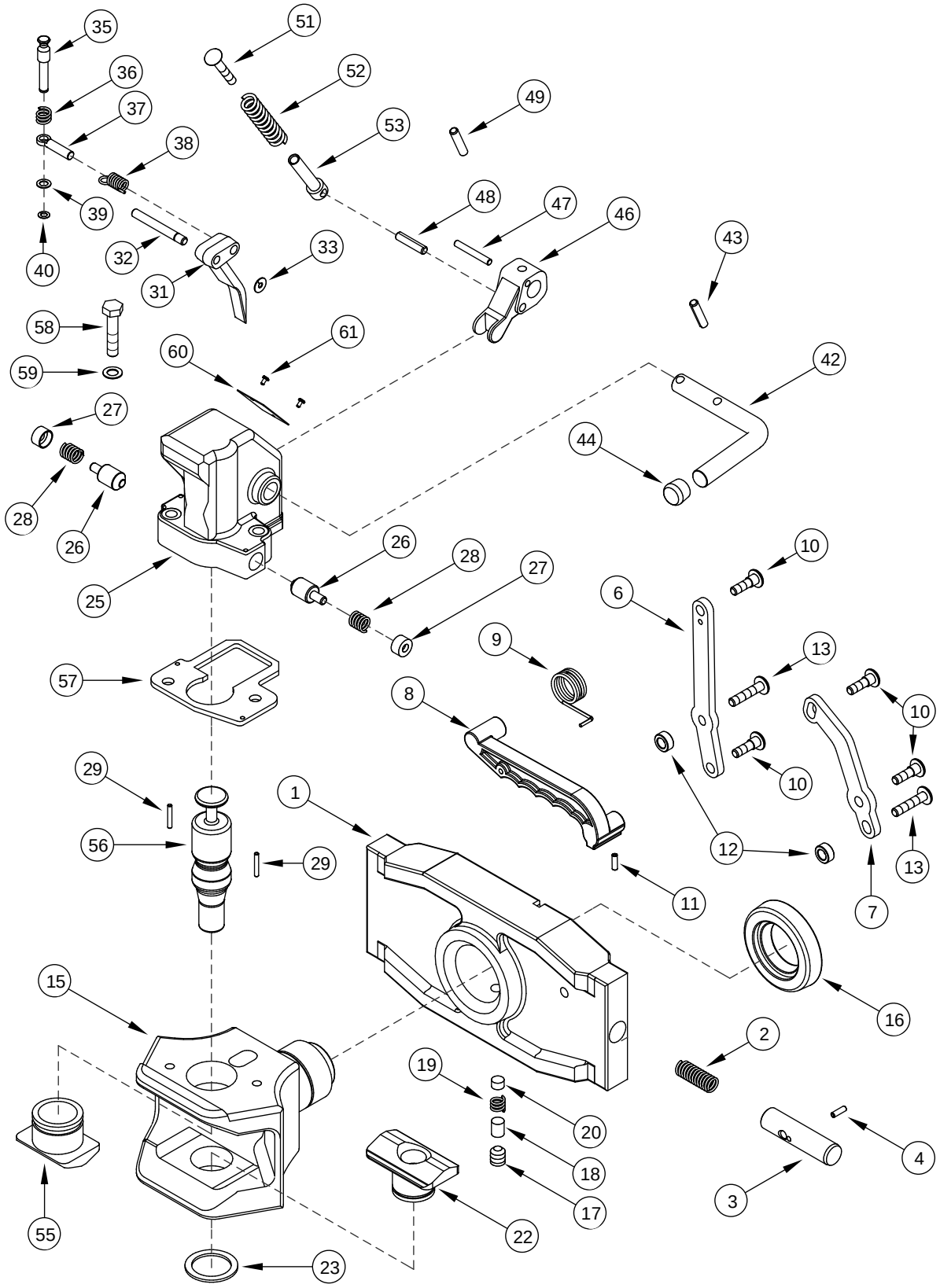

ENGANCHE DEL REMOLQUE - GANCHO AUTOMÁTICO, 37 MM, SÓLO ALEMANIA (CRAMER)
FORQUILHA AUTOMÁTICA (37 MM) DO ENGATE DO REBOQUE, APENAS NA ALEMANHA (CRAMER)
TREKHAAK OPLEGGER - AUTO-GAFFEL, 37 MM, UITSLUITEND DUITSLAND (CRAMER)
ANHÆNGERTRÆK - MANUEL TRÆKBØJLE, 37 MM, KUN TYSKLAND (CRAMER)

R	N	P.N.	MOD	Q	Description Denominacion	Descrizione Denominação	Description Beschrijving	Bezeichnung Beskrivelse	L.C.
39		NSS		1	NOT SERVICED SEPARATELY Washer				
						NON FORNITO SEPARAT	NON FOURNI SEPAREMI	KEIN ERSATZTEIL	064N
					NO SE REPARA SEPARA	NOT SERVICED SEPARA	NIET ALLEEN VERKRIJG	NOT SERVICED SEPARA	
40		NSS		1	NOT SERVICED SEPARATELY Ring, Retaining				
						NON FORNITO SEPARAT	NON FOURNI SEPAREMI	KEIN ERSATZTEIL	064N
					NO SE REPARA SEPARA	NOT SERVICED SEPARA	NIET ALLEEN VERKRIJG	NOT SERVICED SEPARA	
		310147A1		1	HANDLE Inc. 42 - 44	MANIGLIA	POIGNÉE	HANDGRIFF	020M
					MANECILLA	MANIPULO	HENDEL	HAANDTAG	
42		NSS		1	NOT SERVICED SEPARATELY Handle				
						NON FORNITO SEPARAT	NON FOURNI SEPAREMI	KEIN ERSATZTEIL	064N
					NO SE REPARA SEPARA	NOT SERVICED SEPARA	NIET ALLEEN VERKRIJG	NOT SERVICED SEPARA	
43		NSS		1	NOT SERVICED SEPARATELY Pin				
						NON FORNITO SEPARAT	NON FOURNI SEPAREMI	KEIN ERSATZTEIL	064N
					NO SE REPARA SEPARA	NOT SERVICED SEPARA	NIET ALLEEN VERKRIJG	NOT SERVICED SEPARA	
44		NSS		1	NOT SERVICED SEPARATELY Knob				
						NON FORNITO SEPARAT	NON FOURNI SEPAREMI	KEIN ERSATZTEIL	064N
					NO SE REPARA SEPARA	NOT SERVICED SEPARA	NIET ALLEEN VERKRIJG	NOT SERVICED SEPARA	
		310175A1		1	LEVER ASSY. Inc. 46 - 49	LEVA, COMPLESSIVO	LEVIER (ASSEMBLE)	HEBEL (KPLT.)	P520
					PALANCA (CONJUNTO)	ALAVANCA CONJUNTO	LEVER ASSY.	LEVER ASSY.	
46		NSS		1	NOT SERVICED SEPARATELY Lever				
						NON FORNITO SEPARAT	NON FOURNI SEPAREMI	KEIN ERSATZTEIL	064N
					NO SE REPARA SEPARA	NOT SERVICED SEPARA	NIET ALLEEN VERKRIJG	NOT SERVICED SEPARA	
47		NSS		1	NOT SERVICED SEPARATELY Pin				
						NON FORNITO SEPARAT	NON FOURNI SEPAREMI	KEIN ERSATZTEIL	064N
					NO SE REPARA SEPARA	NOT SERVICED SEPARA	NIET ALLEEN VERKRIJG	NOT SERVICED SEPARA	
48		NSS		1	NOT SERVICED SEPARATELY Pin				
						NON FORNITO SEPARAT	NON FOURNI SEPAREMI	KEIN ERSATZTEIL	064N
					NO SE REPARA SEPARA	NOT SERVICED SEPARA	NIET ALLEEN VERKRIJG	NOT SERVICED SEPARA	
49		838-5836		1	PIN, ROLL 8 x 38 mm	SPINA ELASTICA	GOUPILLE ELASTIQUE	SPANNSTIFT	200S
					PASADOR TUBOLAR	TROCO	SPANSTIFT	SPLIT	
		310181A1		1	PIN, CLEVIS Inc. 51 - 53	SPINA, PER FORCELLA	AXE DE CHAPE	GABELSTIFT	P694
					PASADOR DE HORQUILL	CUPILHA	PIN, CLEVIS	GAFFELBOLT	
51		NSS		1	NOT SERVICED SEPARATELY Screw				
						NON FORNITO SEPARAT	NON FOURNI SEPAREMI	KEIN ERSATZTEIL	064N
					NO SE REPARA SEPARA	NOT SERVICED SEPARA	NIET ALLEEN VERKRIJG	NOT SERVICED SEPARA	
52		NSS		1	NOT SERVICED SEPARATELY Spring				
						NON FORNITO SEPARAT	NON FOURNI SEPAREMI	KEIN ERSATZTEIL	064N
					NO SE REPARA SEPARA	NOT SERVICED SEPARA	NIET ALLEEN VERKRIJG	NOT SERVICED SEPARA	
53		NSS		1	NOT SERVICED SEPARATELY Clevis				
						NON FORNITO SEPARAT	NON FOURNI SEPAREMI	KEIN ERSATZTEIL	064N
					NO SE REPARA SEPARA	NOT SERVICED SEPARA	NIET ALLEEN VERKRIJG	NOT SERVICED SEPARA	
55		310184A1		1	BUSHING, LARGE 38 mm	ANELLO	BAGUE	BUCHSE, GROSS	Z312
					CASQUILLO	BUCHA	BUSHING, LARGE	BUSHING, LARGE	
56		310186A1		1	PIN, HITCH 37 mm	PERNO DELL'ATTACCO	AXE D'ATTELAGE	KUPPLUNGSBOLZEN	P740
					PASADOR DE ENGANCH	PINO	PIN, HITCH	TRÆKKROGSPIND	
57		NSS		1	NOT SERVICED SEPARATELY Plate				
						NON FORNITO SEPARAT	NON FOURNI SEPAREMI	KEIN ERSATZTEIL	064N
					NO SE REPARA SEPARA	NOT SERVICED SEPARA	NIET ALLEEN VERKRIJG	NOT SERVICED SEPARA	

09-58		p4	11/04

TRAILER HITCH - AUTO CLEVIS, 37 MM, GERMANY ONLY (CRAMER)
ATTACCO DEL RIMORCHIO - MANIGLIONE CON PERNO AUTOMATICO, 37 MM, SOLO PER LA GERMANIA (CRAMER)
ATTELAGE DE LA REMORQUE - CHAPE AUTOMATIQUE, 37 MM, ALLEMAGNE UNIQUEMENT (CRAMER)
ANHÄNGERKUPPLUNG - 37 MM-AUTOMATISCHE GABEL, NUR DEUTSCHLAND (CRAMER)

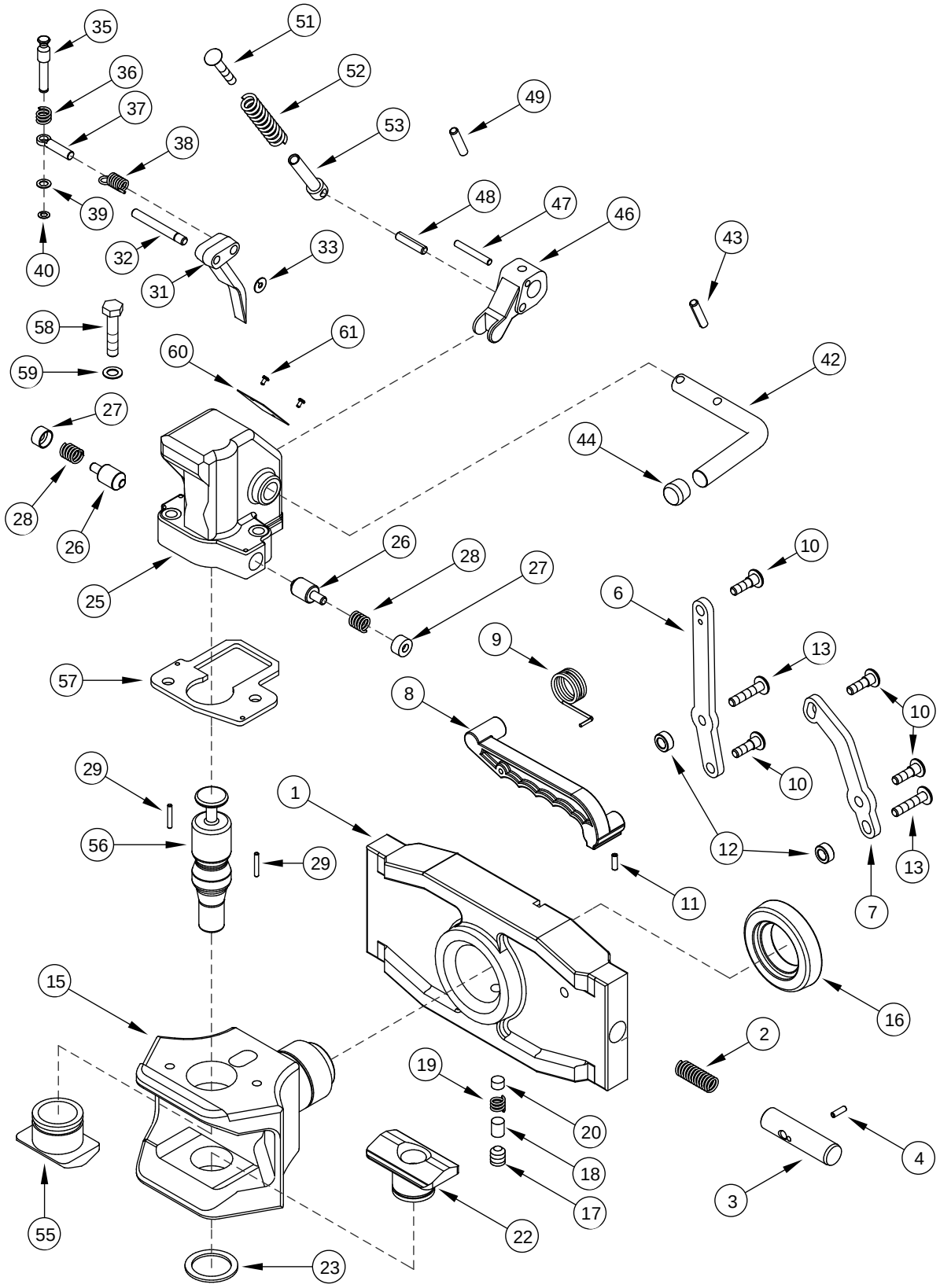

ENGANCHE DEL REMOLQUE - GANCHO AUTOMÁTICO, 37 MM, SÓLO ALEMANIA (CRAMER)
FORQUILHA AUTOMÁTICA (37 MM) DO ENGATE DO REBOQUE, APENAS NA ALEMANHA (CRAMER)
TREKHAAK OPLEGGER - AUTO-GAFFEL, 37 MM, UITSLUITEND DUITSLAND (CRAMER)
ANHÆNGERTRÆK - MANUEL TRÆKBØJLE, 37 MM, KUN TYSKLAND (CRAMER)

R	N	P.N.	MOD	Q	Description Denominacion	Descrizione Denominação	Description Beschrijving	Bezeichnung Beskrivelse	L.C.
58		827-10050		2	SCREW M10 x 50; 10.9 TORNILLO	VITE PARAFUSO	VIS SCHROEF	SCHRAUBE SKRUE	P136
59		896-11010		2	WASHER 11 x 21 x 2,5 mm ARANDELA	ROSETTA PIANA ANILHA	RONDELLE SLUITRING	SCHEIBE FLADSKIVE	9720
60		NSS		1	NOT SERVICED SEPARATELY Decal NO SE REPARA SEPARA	NON FORNITO SEPARAT NOT SERVICED SEPARA	NON FOURNI SEPAREMI NIET ALLEEN VERKRIJG	KEIN ERSATZTEIL NOT SERVICED SEPARA	064N
61		906028R1		2	PIN, GROOVED 3 x 6 mm PASADOR RANURADO	PERNO SCANALATO PERNO ESTRIADO	GOUPILLE CANNELÉES GEGROEFDE PEN	KERBSTIFT TAP M/NOT	086P

09-59		p1	11/04

TRAILER HITCH - AUTO CLEVIS, 32 MM, GERMANY ONLY (CRAMER)
ATTACCO DEL RIMORCHIO - MANIGLIONE CON PERNO AUTOMATICO, 32 MM, SOLO PER LA GERMANIA (CRAMER)
ATTELAGE DE LA REMORQUE - CHAPE AUTOMATIQUE, 32 MM, ALLEMAGNE UNIQUEMENT (CRAMER)
ANHÄNGERKUPPLUNG - 32 MM-AUTOMATISCHE GABEL, NUR DEUTSCHLAND (CRAMER)

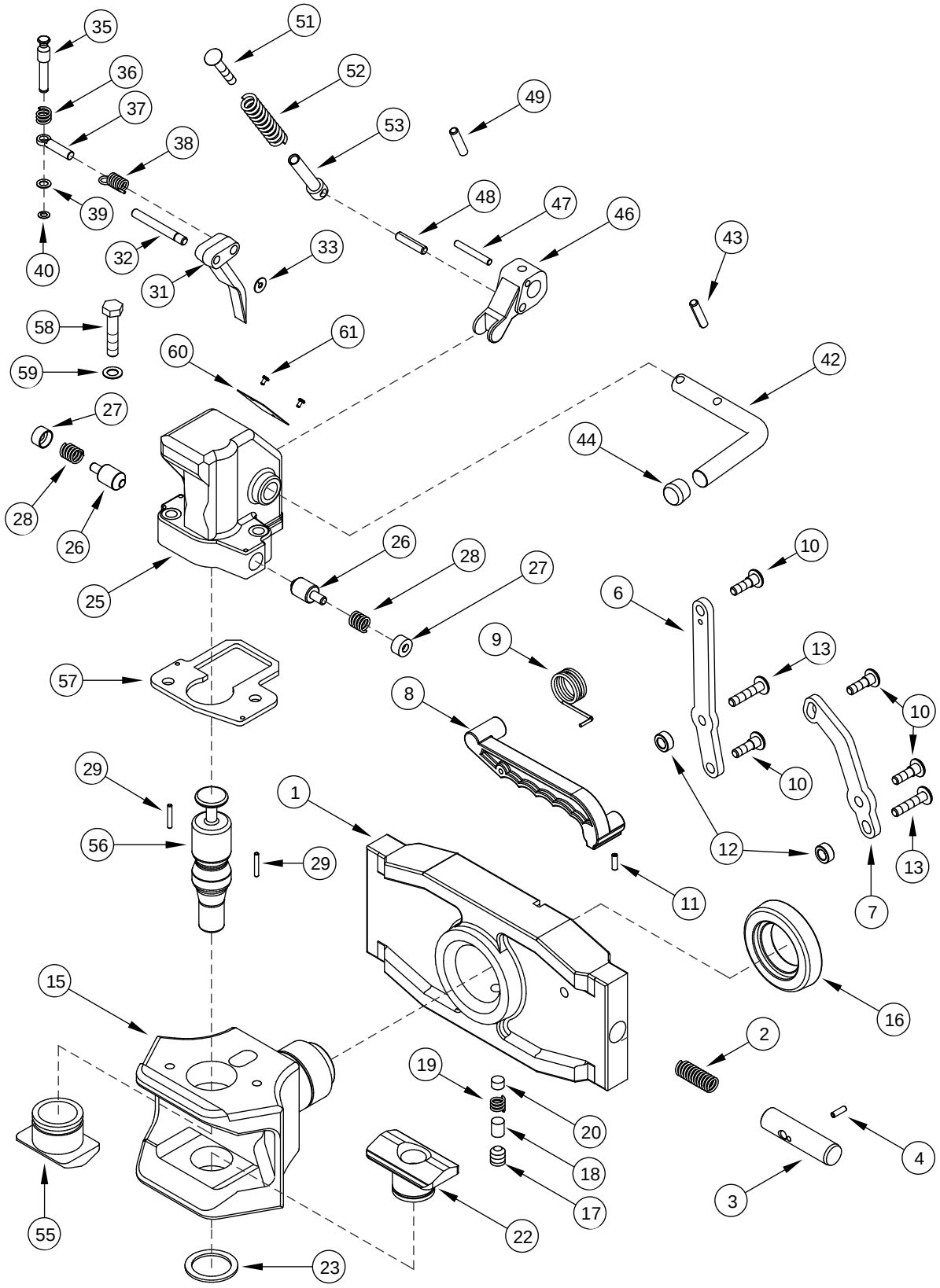

ENGANCHE DEL REMOLQUE - GANCHO AUTOMÁTICO, 32 MM, SÓLO ALEMANIA (CRAMER)
FORQUILHA AUTOMÁTICA (32 MM) DO ENGATE DO REBOQUE, APENAS NA ALEMANHA (CRAMER)
TREKHAAK OPLEGGER - AUTO-GAFFEL, 32 MM, UITSLUITEND DUITSLAND (CRAMER)
ANHÆNGERTRÆK - MANUEL TRÆKBØJLE, 32 MM, KUN TYSKLAND (CRAMER)

R	N	P.N.	MOD	Q	Description Denominacion	Descrizione Denominação	Description Beschrijving	Bezeichnung Beskrivelse	L.C.
		428394A1		1	HITCH, TRAILER 32 mm, Inc. 1 - 61				
						ATTACCO,RIMORCHIO	CHAPE D'ATTELAGE	ZUGMAUL	Z015
					ABRAZADERA ENGACHE	ENGATE CONJUNTO	HITCH, TRAILER	HITCH, TRAILER	
1		NSS		1	NOT SERVICED SEPARATELY Support				
						NON FORNITO SEPARAT	NON FOURNI SEPAREMI	KEIN ERSATZTEIL	064N
					NO SE REPARA SEPARA	NOT SERVICED SEPARA	NIET ALLEEN VERKRIJG	NOT SERVICED SEPARA	
2		141013A1		2	SPRING	MOLLA	RESSORT	FEDER	100M
					RESORTE	MOLA	VEER	FJEDER	
3		141014A1		2	PIN	PERNO	AXE	BOLZEN	080P
					PERNO	PERNO	PEN	STIFT	
4		738-1516		2	SPLIT PIN/SAFETY PIN 5 x 16 mm				
						PERNO DIVISO	GOUPILLE	SPLINT/STIFT	Z510
					PASADOR	PINO	SPLIT PIN/SAFETY PIN	SPLIT PIN/SAFETY PIN	
		141015A1		1	HANDLE Inc. 6 - 13	MANIGLIA	POIGNÉE	HANDGRIFF	020M
					MANECILLA	MANIPULO	HENDEL	HAANDTAG	
6		141016A1		1	BAR	BARRA	BARRE	STAB	530B
					BARRA	BARRA	STAAF	BJÆLKE	
7		141017A1		1	BAR	BARRA	BARRE	STAB	0500
					BARRA	BARRA	STAAF	BJÆKE	
8		141018A1		1	LEVER	LEVA	LEVIER	HEBEL	5110
					PALANCA	ALAVANCA	HEFBOOM	HAANDTAG	
9		141019A1		1	SPRING	MOLLA	RESSORT	FEDER	8315
					RESORTE	MOLA	VEER	FJEDER	
10		141020A1		4	PIN, HEADED	PERNO CON TESTA	AXE A TÊTE	KOPFSTIFT	P888
					EJE CON CABEZA	PINO COM CABECA	PIN, HEADED	SPLIT MED HOVED	
11		738-1516		2	SPLIT PIN/SAFETY PIN 5 x 16 mm				
						PERNO DIVISO	GOUPILLE	SPLINT/STIFT	Z510
					PASADOR	PINO	SPLIT PIN/SAFETY PIN	SPLIT PIN/SAFETY PIN	
12		141021A1		2	SPACER	DISTANZIALE	ENTRETOISE	DISTANZSTÜCK	8090
					ESPACIADOR	ESPACADOR	AFSTANDSRING	AFSTANDSSTYKKE	
13		141022A1		2	PIN, HEADED	PERNO CON TESTA	AXE A TÊTE	KOPFSTIFT	P888
					EJE CON CABEZA	PINO COM CABECA	PIN, HEADED	SPLIT MED HOVED	
15		NSS		1	NOT SERVICED SEPARATELY Clevis				
						NON FORNITO SEPARAT	NON FOURNI SEPAREMI	KEIN ERSATZTEIL	064N
					NO SE REPARA SEPARA	NOT SERVICED SEPARA	NIET ALLEEN VERKRIJG	NOT SERVICED SEPARA	
16		NSS		1	NOT SERVICED SEPARATELY Retainer				
						NON FORNITO SEPARAT	NON FOURNI SEPAREMI	KEIN ERSATZTEIL	064N
					NO SE REPARA SEPARA	NOT SERVICED SEPARA	NIET ALLEEN VERKRIJG	NOT SERVICED SEPARA	
		177336A1		1	PIN, LARGE Inc. 17 - 20	SPINA, GRANDE	AXE, GROS	BOLZEN, GROSS	Z009
					BULON/PIN, LARGO	PINO LARGO	PIN, LARGE	STOR PIND	
17		NSS		1	NOT SERVICED SEPARATELY Screw				
						NON FORNITO SEPARAT	NON FOURNI SEPAREMI	KEIN ERSATZTEIL	064N
					NO SE REPARA SEPARA	NOT SERVICED SEPARA	NIET ALLEEN VERKRIJG	NOT SERVICED SEPARA	
18		NSS		1	NOT SERVICED SEPARATELY Pin				
						NON FORNITO SEPARAT	NON FOURNI SEPAREMI	KEIN ERSATZTEIL	064N
					NO SE REPARA SEPARA	NOT SERVICED SEPARA	NIET ALLEEN VERKRIJG	NOT SERVICED SEPARA	
19		NSS		1	NOT SERVICED SEPARATELY Spring				
						NON FORNITO SEPARAT	NON FOURNI SEPAREMI	KEIN ERSATZTEIL	064N
					NO SE REPARA SEPARA	NOT SERVICED SEPARA	NIET ALLEEN VERKRIJG	NOT SERVICED SEPARA	

09-59		p2	11/04

TRAILER HITCH - AUTO CLEVIS, 32 MM, GERMANY ONLY (CRAMER)
ATTACCO DEL RIMORCHIO - MANIGLIONE CON PERNO AUTOMATICO, 32 MM, SOLO PER LA GERMANIA (CRAMER)
ATTELAGE DE LA REMORQUE - CHAPE AUTOMATIQUE, 32 MM, ALLEMAGNE UNIQUEMENT (CRAMER)
ANHÄNGERKUPPLUNG - 32 MM-AUTOMATISCHE GABEL, NUR DEUTSCHLAND (CRAMER)

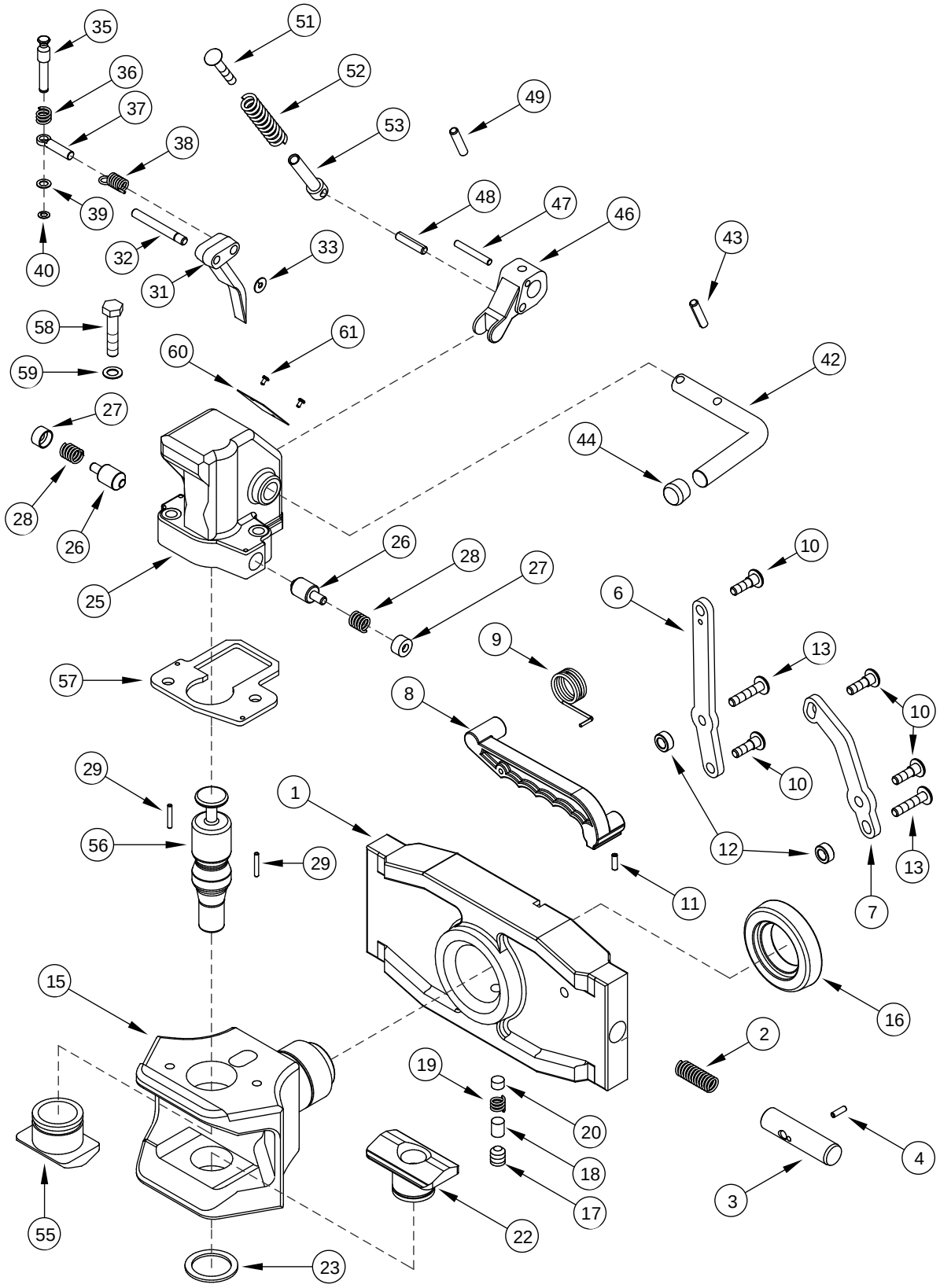

ENGANCHE DEL REMOLQUE - GANCHO AUTOMÁTICO, 32 MM, SÓLO ALEMANIA (CRAMER)
FORQUILHA AUTOMÁTICA (32 MM) DO ENGATE DO REBOQUE, APENAS NA ALEMANHA (CRAMER)
TREKHAAK OPLEGGER - AUTO-GAFFEL, 32 MM, UITSLUITEND DUITSLAND (CRAMER)
ANHÆNGERTRÆK - MANUEL TRÆKBØJLE, 32 MM, KUN TYSKLAND (CRAMER)

R	N	P.N.	MOD	Q	Description Denominacion	Descrizione Denominação	Description Beschrijving	Bezeichnung Beskrivelse	L.C.
20		NSS		1	NOT SERVICED SEPARATELY Block				
						NON FORNITO SEPARAT	NON FOURNI SEPAREMI	KEIN ERSATZTEIL	064N
					NO SE REPARA SEPARA	NOT SERVICED SEPARA	NIET ALLEEN VERKRIJG	NOT SERVICED SEPARA	
22		310109A1		1	BUSHING, LARGE 32 mm	ANELLO	BAGUE	BUCHSE, GROSS	Z312
					CASQUILLO	BUCHA	BUSHING, LARGE	BUSHING, LARGE	
23		3057331R1		1	RING, SNAP 40 x 2,5 mm	ANELLO ELASTICO	ANNEAU D'ARRÊT	SICHERUNGSRING	054A
					ANILLO DE RESORTE	ANEL	RING, SNAP	LÅSERING	
		428403A1		1	LATCH ASSY. 32 mm, Inc. 25 - 56				
						GRUPPO DISP.CHIUS.	VERROU-BLOCAGE ASS	RIEGEL (KPLT.)	P464
					CERROJO (CONJUNTO)	TRINCO CONJUNTO	LATCH ASSY.	LATCH ASSY.	
25		NSS		1	NOT SERVICED SEPARATELY Housing				
						NON FORNITO SEPARAT	NON FOURNI SEPAREMI	KEIN ERSATZTEIL	064N
					NO SE REPARA SEPARA	NOT SERVICED SEPARA	NIET ALLEEN VERKRIJG	NOT SERVICED SEPARA	
26		NSS		2	NOT SERVICED SEPARATELY Pin				
						NON FORNITO SEPARAT	NON FOURNI SEPAREMI	KEIN ERSATZTEIL	064N
					NO SE REPARA SEPARA	NOT SERVICED SEPARA	NIET ALLEEN VERKRIJG	NOT SERVICED SEPARA	
27		NSS		2	NOT SERVICED SEPARATELY Retainer				
						NON FORNITO SEPARAT	NON FOURNI SEPAREMI	KEIN ERSATZTEIL	064N
					NO SE REPARA SEPARA	NOT SERVICED SEPARA	NIET ALLEEN VERKRIJG	NOT SERVICED SEPARA	
28		NSS		2	NOT SERVICED SEPARATELY Spring				
						NON FORNITO SEPARAT	NON FOURNI SEPAREMI	KEIN ERSATZTEIL	064N
					NO SE REPARA SEPARA	NOT SERVICED SEPARA	NIET ALLEEN VERKRIJG	NOT SERVICED SEPARA	
29		NSS		2	NOT SERVICED SEPARATELY Pin				
						NON FORNITO SEPARAT	NON FOURNI SEPAREMI	KEIN ERSATZTEIL	064N
					NO SE REPARA SEPARA	NOT SERVICED SEPARA	NIET ALLEEN VERKRIJG	NOT SERVICED SEPARA	
		310130A1		1	LEVER ASSY. Inc. 31 - 33	LEVA, COMPLESSIVO	LEVIER (ASSEMBLE)	HEBEL (KPLT.)	P520
					PALANCA (CONJUNTO)	ALAVANCA CONJUNTO	LEVER ASSY.	LEVER ASSY.	
31		NSS		1	NOT SERVICED SEPARATELY Lever				
						NON FORNITO SEPARAT	NON FOURNI SEPAREMI	KEIN ERSATZTEIL	064N
					NO SE REPARA SEPARA	NOT SERVICED SEPARA	NIET ALLEEN VERKRIJG	NOT SERVICED SEPARA	
32		310135A1		1	SPLIT PIN/SAFETY PIN	PERNO DIVISO	GOUPILLE	SPLINT/STIFT	Z510
					PASADOR	PINO	SPLIT PIN/SAFETY PIN	SPLIT PIN/SAFETY PIN	
33		800-416		1	CIRCLIP	ANELLO DI RITEGNO	CIRCLIP	HALTERING	P019
					RETENEDOR	FREIO DE MOLA	BOORGVEER	LÃSERING	
		310139A1		1	PIN Inc. 35 - 40	PERNO	AXE	BOLZEN	080P
					PERNO	PERNO	PEN	STIFT	
35		NSS		1	NOT SERVICED SEPARATELY Pin				
						NON FORNITO SEPARAT	NON FOURNI SEPAREMI	KEIN ERSATZTEIL	064N
					NO SE REPARA SEPARA	NOT SERVICED SEPARA	NIET ALLEEN VERKRIJG	NOT SERVICED SEPARA	
36		NSS		1	NOT SERVICED SEPARATELY Spring				
						NON FORNITO SEPARAT	NON FOURNI SEPAREMI	KEIN ERSATZTEIL	064N
					NO SE REPARA SEPARA	NOT SERVICED SEPARA	NIET ALLEEN VERKRIJG	NOT SERVICED SEPARA	
37		NSS		1	NOT SERVICED SEPARATELY Clevis				
						NON FORNITO SEPARAT	NON FOURNI SEPAREMI	KEIN ERSATZTEIL	064N
					NO SE REPARA SEPARA	NOT SERVICED SEPARA	NIET ALLEEN VERKRIJG	NOT SERVICED SEPARA	
38		NSS		1	NOT SERVICED SEPARATELY Spring				
						NON FORNITO SEPARAT	NON FOURNI SEPAREMI	KEIN ERSATZTEIL	064N
					NO SE REPARA SEPARA	NOT SERVICED SEPARA	NIET ALLEEN VERKRIJG	NOT SERVICED SEPARA	

09-59		p3	11/04

TRAILER HITCH - AUTO CLEVIS, 32 MM, GERMANY ONLY (CRAMER)
ATTACCO DEL RIMORCHIO - MANIGLIONE CON PERNO AUTOMATICO, 32 MM, SOLO PER LA GERMANIA (CRAMER)
ATTELAGE DE LA REMORQUE - CHAPE AUTOMATIQUE, 32 MM, ALLEMAGNE UNIQUEMENT (CRAMER)
ANHÄNGERKUPPLUNG - 32 MM-AUTOMATISCHE GABEL, NUR DEUTSCHLAND (CRAMER)

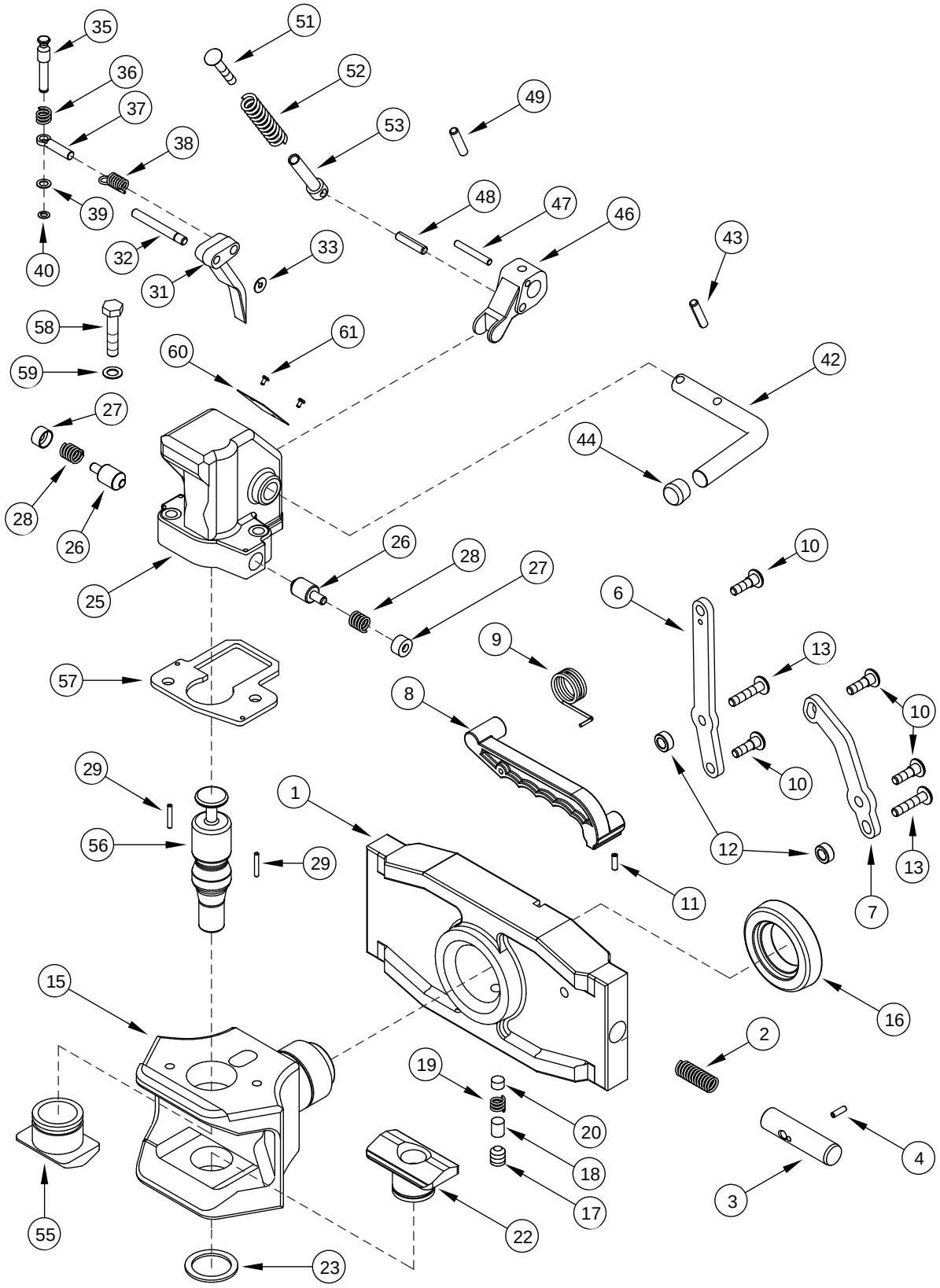

ENGANCHE DEL REMOLQUE - GANCHO AUTOMÁTICO, 32 MM, SÓLO ALEMANIA (CRAMER)
FORQUILHA AUTOMÁTICA (32 MM) DO ENGATE DO REBOQUE, APENAS NA ALEMANHA (CRAMER)
TREKHAAK OPLEGGER - AUTO-GAFFEL, 32 MM, UITSLUITEND DUITSLAND (CRAMER)
ANHÆNGERTRÆK - MANUEL TRÆKBØJLE, 32 MM, KUN TYSKLAND (CRAMER)

R	N	P.N.	MOD	Q	Description Denominacion	Descrizione Denominação	Description Beschrijving	Bezeichnung Beskrivelse	L.C.
39		NSS		1	NOT SERVICED SEPARATELY Washer				
						NON FORNITO SEPARAT	NON FOURNI SEPAREMI	KEIN ERSATZTEIL	064N
					NO SE REPARA SEPARA	NOT SERVICED SEPARA	NIET ALLEEN VERKRIJG	NOT SERVICED SEPARA	
40		NSS		1	NOT SERVICED SEPARATELY Ring, Retaining				
						NON FORNITO SEPARAT	NON FOURNI SEPAREMI	KEIN ERSATZTEIL	064N
					NO SE REPARA SEPARA	NOT SERVICED SEPARA	NIET ALLEEN VERKRIJG	NOT SERVICED SEPARA	
		310147A1		1	HANDLE Inc. 42 - 44	MANIGLIA	POIGNÉE	HANDGRIFF	020M
					MANECILLA	MANIPULO	HENDEL	HAANDTAG	
42		NSS		1	NOT SERVICED SEPARATELY Handle				
						NON FORNITO SEPARAT	NON FOURNI SEPAREMI	KEIN ERSATZTEIL	064N
					NO SE REPARA SEPARA	NOT SERVICED SEPARA	NIET ALLEEN VERKRIJG	NOT SERVICED SEPARA	
43		NSS		1	NOT SERVICED SEPARATELY Pin				
						NON FORNITO SEPARAT	NON FOURNI SEPAREMI	KEIN ERSATZTEIL	064N
					NO SE REPARA SEPARA	NOT SERVICED SEPARA	NIET ALLEEN VERKRIJG	NOT SERVICED SEPARA	
44		NSS		1	NOT SERVICED SEPARATELY Knob				
						NON FORNITO SEPARAT	NON FOURNI SEPAREMI	KEIN ERSATZTEIL	064N
					NO SE REPARA SEPARA	NOT SERVICED SEPARA	NIET ALLEEN VERKRIJG	NOT SERVICED SEPARA	
		310175A1		1	LEVER ASSY. Inc. 46 - 49	LEVA, COMPLESSIVO	LEVIER (ASSEMBLE)	HEBEL (KPLT.)	P520
					PALANCA (CONJUNTO)	ALAVANCA CONJUNTO	LEVER ASSY.	LEVER ASSY.	
46		NSS		1	NOT SERVICED SEPARATELY Lever				
						NON FORNITO SEPARAT	NON FOURNI SEPAREMI	KEIN ERSATZTEIL	064N
					NO SE REPARA SEPARA	NOT SERVICED SEPARA	NIET ALLEEN VERKRIJG	NOT SERVICED SEPARA	
47		NSS		1	NOT SERVICED SEPARATELY Pin				
						NON FORNITO SEPARAT	NON FOURNI SEPAREMI	KEIN ERSATZTEIL	064N
					NO SE REPARA SEPARA	NOT SERVICED SEPARA	NIET ALLEEN VERKRIJG	NOT SERVICED SEPARA	
48		NSS		1	NOT SERVICED SEPARATELY Pin				
						NON FORNITO SEPARAT	NON FOURNI SEPAREMI	KEIN ERSATZTEIL	064N
					NO SE REPARA SEPARA	NOT SERVICED SEPARA	NIET ALLEEN VERKRIJG	NOT SERVICED SEPARA	
49		838-5836		1	PIN, ROLL 8 x 38 mm	SPINA ELASTICA	GOUPILLE ELASTIQUE	SPANNSTIFT	200S
					PASADOR TUBOLAR	TROCO	SPANSTIFT	SPLIT	
		310181A1		1	PIN, CLEVIS Inc. 51 - 53	SPINA, PER FORCELLA	AXE DE CHAPE	GABELSTIFT	P694
					PASADOR DE HORQUILL	CUPILHA	PIN, CLEVIS	GAFFELBOLT	
51		NSS		1	NOT SERVICED SEPARATELY Screw				
						NON FORNITO SEPARAT	NON FOURNI SEPAREMI	KEIN ERSATZTEIL	064N
					NO SE REPARA SEPARA	NOT SERVICED SEPARA	NIET ALLEEN VERKRIJG	NOT SERVICED SEPARA	
52		NSS		1	NOT SERVICED SEPARATELY Spring				
						NON FORNITO SEPARAT	NON FOURNI SEPAREMI	KEIN ERSATZTEIL	064N
					NO SE REPARA SEPARA	NOT SERVICED SEPARA	NIET ALLEEN VERKRIJG	NOT SERVICED SEPARA	
53		NSS		1	NOT SERVICED SEPARATELY Clevis				
						NON FORNITO SEPARAT	NON FOURNI SEPAREMI	KEIN ERSATZTEIL	064N
					NO SE REPARA SEPARA	NOT SERVICED SEPARA	NIET ALLEEN VERKRIJG	NOT SERVICED SEPARA	
55		310109A1		1	BUSHING, LARGE 32 mm	ANELLO	BAGUE	BUCHSE, GROSS	Z312
					CASQUILLO	BUCHA	BUSHING, LARGE	BUSHING, LARGE	
56		310185A1		1	PIN, LARGE 32 mm	SPINA, GRANDE	AXE, GROS	BOLZEN, GROSS	Z009
					BULON/PIN, LARGO	PINO LARGO	PIN, LARGE	STOR PIND	
57		NSS		1	NOT SERVICED SEPARATELY Plate				
						NON FORNITO SEPARAT	NON FOURNI SEPAREMI	KEIN ERSATZTEIL	064N
					NO SE REPARA SEPARA	NOT SERVICED SEPARA	NIET ALLEEN VERKRIJG	NOT SERVICED SEPARA	

09-59		p4	11/04

TRAILER HITCH - AUTO CLEVIS, 32 MM, GERMANY ONLY (CRAMER)
ATTACCO DEL RIMORCHIO - MANIGLIONE CON PERNO AUTOMATICO, 32 MM, SOLO PER LA GERMANIA (CRAMER)
ATTELAGE DE LA REMORQUE - CHAPE AUTOMATIQUE, 32 MM, ALLEMAGNE UNIQUEMENT (CRAMER)
ANHÄNGERKUPPLUNG - 32 MM-AUTOMATISCHE GABEL, NUR DEUTSCHLAND (CRAMER)

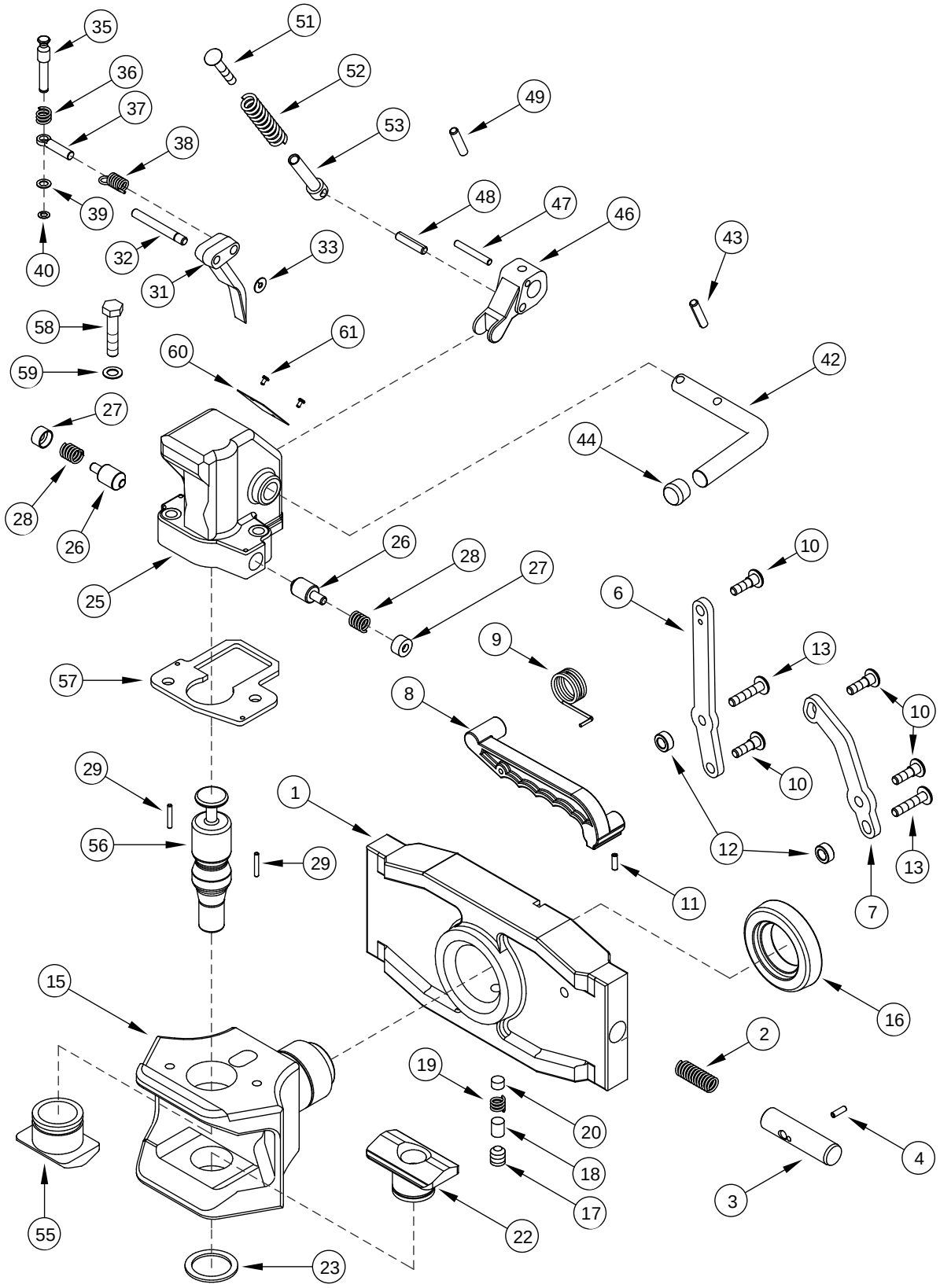

ENGANCHE DEL REMOLQUE - GANCHO AUTOMÁTICO, 32 MM, SÓLO ALEMANIA (CRAMER)
FORQUILHA AUTOMÁTICA (32 MM) DO ENGATE DO REBOQUE, APENAS NA ALEMANHA (CRAMER)
TREKHAAK OPLEGGER - AUTO-GAFFEL, 32 MM, UITSLUITEND DUITSLAND (CRAMER)
ANHÆNGERTRÆK - MANUEL TRÆKBØJLE, 32 MM, KUN TYSKLAND (CRAMER)

R	N	P.N.	MOD	Q	Description Denominacion	Descrizione Denominação	Description Beschrijving	Bezeichnung Beskrivelse	L.C.
58		827-10050		2	SCREW M10 x 50; 10.9 TORNILLO	VITE PARAFUSO	VIS SCHROEF	SCHRAUBE SKRUE	P136
59		896-11010		2	WASHER 11 x 21 x 2,5 mm ARANDELA	ROSETTA PIANA ANILHA	RONDELLE SLUITRING	SCHEIBE FLADSKIVE	9720
60		NSS		1	NOT SERVICED SEPARATELY Decal NO SE REPARA SEPARA	NON FORNITO SEPARAT NOT SERVICED SEPARA	NON FOURNI SEPAREMI NIET ALLEEN VERKRIJG	KEIN ERSATZTEIL NOT SERVICED SEPARA	064N
61		906028R1		2	PIN, GROOVED 3 x 6 mm PASADOR RANURADO	PERNO SCANALATO PERNO ESTRIADO	GOUPILLE CANNELÉES GEGROEFDE PEN	KERBSTIFT TAP M/NOT	086P

09-60		p1	11/04

TRAILER HITCH - AUTO CLEVIS, 38 MM, GERMANY ONLY (CBM)
ATTACCO DEL RIMORCHIO - MANIGLIONE CON PERNO AUTOMATICO, 38 MM, SOLO PER LA GERMANIA (CBM)
ATTELAGE DE LA REMORQUE - CHAPE AUTOMATIQUE, 38 MM, ALLEMAGNE UNIQUEMENT (CBM)
ANHÄNGERKUPPLUNG - 38 MM-AUTOMATISCHE GABEL, NUR DEUTSCHLAND (CBM)

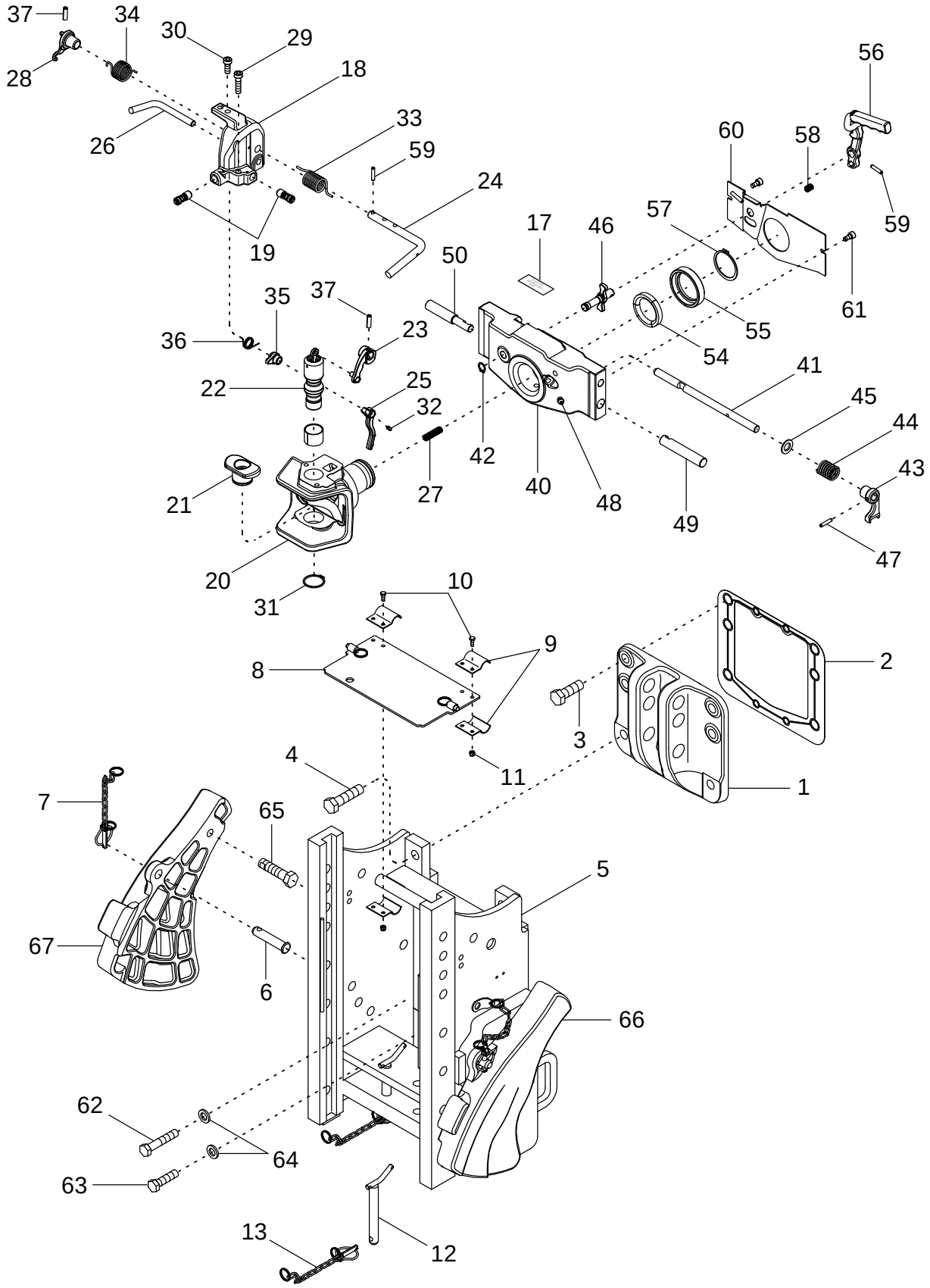

ENGANCHE DEL REMOLQUE - GANCHO AUTOMÁTICO, 38 MM, SÓLO ALEMANIA (CBM)
FORQUILHA AUTOMÁTICA (38 MM) DO ENGATE DO REBOQUE, APENAS NA ALEMANHA (CBM)
TREKHAAK OPLEGGER - AUTO-GAFFEL, 38 MM, UITSLUITEND DUITSLAND (CBM)
ANHÆNGERTRÆK - AUTOMATISK TRÆKBØJLE, 38 MM, KUN TYSKLAND (CBM)

R	N	P.N.	MOD	Q	Description Denominacion	Descrizione Denominação	Description Beschrijving	Bezeichnung Beskrivelse	L.C.
1		377206A2		1	SUPPORT SOPORTE	SUPPORTO SUPORTE	SUPPORT STEUN	STÜTZE BESLAG	300S
2		379145A1		1	GASKET JUNTA HERMETICA	GUARNIZIONE JUNTA	JOINT DICHTINGSSTUK	DICHTUNG, FLACH PAKNING	123G
3		628-20060		4	SCREW M20 x 60; 10.9 TORNILLO	VITE PARAFUSO	VIS SCHROEF	SCHRAUBE SKRUE	7450
4		828-20080		2	SCREW M20 x 80; 10.9 TORNILLO	VITE PARAFUSO	VIS SCHROEF	SCHRAUBE SKRUE	7450
	1	447218A1		1	FRAME ASSY Inc. 5 - 13 BASTIDOR (CONJUNTO)	GRUPPO TELAIO ESTRUTURA CONJUNTO	BATI (ASSEMBLE) FRAME ASSY	RAHMEN (KPLT.) FRAME ASSY	P432
	2	447408A1		1	FRAME ASSY Inc. 5 - 13 BASTIDOR (CONJUNTO)	GRUPPO TELAIO ESTRUTURA CONJUNTO	BATI (ASSEMBLE) FRAME ASSY	RAHMEN (KPLT.) FRAME ASSY	P432
5	1	449065A1		1	BRACKET PIEZA DE SOPORTE	STAFFA BRACADEIRA	PATTE FIXATION STEUNBEUGEL	HALTERUNG BESLAG	225S
5	2	449059A1		1	BRACKET PIEZA DE SOPORTE	STAFFA BRACADEIRA	PATTE FIXATION STEUNBEUGEL	HALTERUNG BESLAG	225S
6		449067A1		2	PIN PERNO	PERNO PERNO	AXE PEN	BOLZEN STIFT	080P
7		449060A1		2	CHAIN CADENA	CATENA CORRENTE	CHAINE KETTING	KETTE KÆDE	095C
8	1	449070A1		1	GUARD ASSY. GUARDA (CONJUNTO)	GRUPPO PROTEZIONE PROTECTOR CONJUNTO	GARANT (ASSEMBLE) GUARD ASSY.	SCHUTZ (KPLT.) GUARD ASSY.	P539
8	2	449062A1		1	GUARD ASSY. GUARDA (CONJUNTO)	GRUPPO PROTEZIONE PROTECTOR CONJUNTO	GARANT (ASSEMBLE) GUARD ASSY.	SCHUTZ (KPLT.) GUARD ASSY.	P539
9		449066A1		4	PLATE PLACA	PIASTRA CHAPA	PLAQUE PLAAT	PLATTE PLADE	105P
10		614-6020		4	BOLT M6 x 20; 8.8 TORNILLO	BULLONE PARAFUSO	BOULON BOUT	SCHAUBENBOLZEN SKRUE	140B
11		832-10406		4	NUT M6; 8 TUERCA	DADO PORCA	ECROU MOER	MUTTER MØTRIK	5780
		449061A1		2	PIN ASSY. Inc. 12, 13 PASADOR (CONJUNTO)	GRUPPO SPINA PINO CONJUNTO	CHEVILLE (ASSEMBLEE) PIN ASSY.	STIFT (KPLT.) PIN ASSY.	P524
12		450465A1		1	PIN PERNO	PERNO PERNO	AXE PEN	BOLZEN STIFT	080P
13		449060A1		1	CHAIN CADENA	CATENA CORRENTE	CHAINE KETTING	KETTE KÆDE	095C
		450780A1		1	HITCH, TRAILER Inc. 17 - 61 ABRAZADERA ENGACHE	ATTACCO,RIMORCHIO ENGATE CONJUNTO	CHAPE D'ATTELAGE HITCH, TRAILER	ZUGMAUL HITCH, TRAILER	Z015
17		NSS		1	NOT SERVICED SEPARATELY Label NO SE REPARA SEPARA	NON FORNITO SEPARAT NOT SERVICED SEPARA	NON FOURNI SEPAREMI NIET ALLEEN VERKRIJG	KEIN ERSATZTEIL NOT SERVICED SEPARA	064N
		451990A1		1	HITCH, TRAILER Inc. 18 - 37 ABRAZADERA ENGACHE	ATTACCO,RIMORCHIO ENGATE CONJUNTO	CHAPE D'ATTELAGE HITCH, TRAILER	ZUGMAUL HITCH, TRAILER	Z015
18		86987855		1	HOUSING CAVIDAD	ALLOGGIAMENTO ALOJAMENTO	CARTER HUIS	GEHÄUSE HUS	014V

(1) With 35 mm (1-3/8 inch) PTO Shaft
(2) With 45 mm (1-3/4 inch) PTO Shaft

09-60		p2	11/04

TRAILER HITCH - AUTO CLEVIS, 38 MM, GERMANY ONLY (CBM)
ATTACCO DEL RIMORCHIO - MANIGLIONE CON PERNO AUTOMATICO, 38 MM, SOLO PER LA GERMANIA (CBM)
ATTELAGE DE LA REMORQUE - CHAPE AUTOMATIQUE, 38 MM, ALLEMAGNE UNIQUEMENT (CBM)
ANHÄNGERKUPPLUNG - 38 MM-AUTOMATISCHE GABEL, NUR DEUTSCHLAND (CBM)

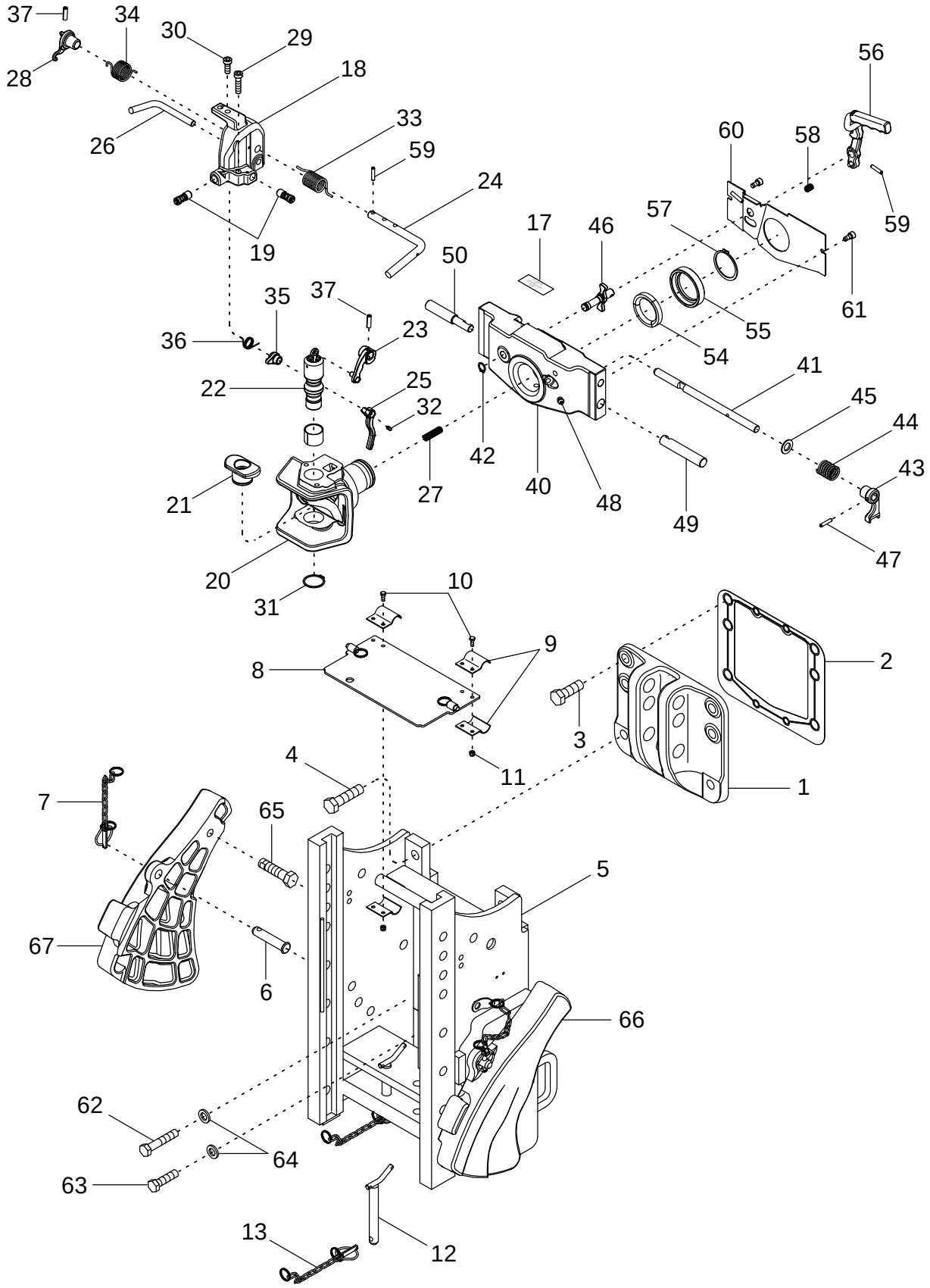

ENGANCHE DEL REMOLQUE - GANCHO AUTOMÁTICO, 38 MM, SÓLO ALEMANIA (CBM)
FORQUILHA AUTOMÁTICA (38 MM) DO ENGATE DO REBOQUE, APENAS NA ALEMANHA (CBM)
TREKHAAK OPLEGGER - AUTO-GAFFEL, 38 MM, UITSLUITEND DUITSLAND (CBM)
ANHÆNGERTRÆK - AUTOMATISK TRÆKBØJLE, 38 MM, KUN TYSKLAND (CBM)

R	N	P.N.	MOD	Q	Description Denominacion	Descrizione Denominação	Description Beschrijving	Bezeichnung Beskrivelse	L.C.
19		86983466		1	PIN ASSY. PASADOR (CONJUNTO)	GRUPPO SPINA PINO CONJUNTO	CHEVILLE (ASSEMBLEE) PIN ASSY.	STIFT (KPLT.) PIN ASSY.	P524
20		86987857		1	CLEVIS HORQUILLA PEQUENA	FORCELLINO FORQUILHA	FOURCHETTE GAFFEL	GABELKOPF GAFFELBOLT	084F
21		86985924		1	BUSHING CASQUILLO	BOCCOLA CASQUILHO	BAGUE LAGERBUS	BUECHSE BOESNING	095B
22		86983465		1	PIN ASSY. PASADOR (CONJUNTO)	GRUPPO SPINA PINO CONJUNTO	CHEVILLE (ASSEMBLEE) PIN ASSY.	STIFT (KPLT.) PIN ASSY.	P524
23		86987856		1	LEVER PALANCA	LEVA ALAVANCA	LEVIER HEFBOOM	HEBEL HAANDTAG	045L
24		86987853		1	LEVER PALANCA	LEVA ALAVANCA	LEVIER HEFBOOM	HEBEL HAANDTAG	045L
25		86985925		1	LEVER PALANCA	LEVA ALAVANCA	LEVIER HEFBOOM	HEBEL HAANDTAG	045L
26		86987854		1	LEVER PALANCA	LEVA ALAVANCA	LEVIER HEFBOOM	HEBEL HAANDTAG	045L
27		86987852		1	SPRING RESORTE	MOLLA MOLA	RESSORT VEER	FEDER FJEDER	100M
28		86985923		1	LEVER PALANCA	LEVA ALAVANCA	LEVIER HEFBOOM	HEBEL HAANDTAG	045L
29		614-10040		1	SCREW M10 x 40 TORNILLO	VITE PARAFUSO	VIS SCHROEF	SCHRAUBE SKRUE	P136
30		614-10025		1	BOLT M10 x 25 TORNILLO	BULLONE PARAFUSO	BOULON BOUT	SCHAUBENBOLZEN SKRUE	140B
31		800-1140		1	SNAP RING ANILLO DE CIERRE	ANELLO ELASTICO ANEL TRAVA	ANNEAU-D'ARRET SNAP RING	SICHERUNGSRING SNAP RING	P345
32		878-10612		1	SCREW M6 x 12 TORNILLO	VITE PARAFUSO	VIS SCHROEF	SCHRAUBE SKRUE	040V
33		86985921		1	SPRING RESORTE	MOLLA MOLA	RESSORT VEER	FEDER FJEDER	100M
34		86985920		1	SPRING RESORTE	MOLLA MOLA	RESSORT VEER	FEDER FJEDER	100M
35		86987851		1	LEVER PALANCA	LEVA ALAVANCA	LEVIER HEFBOOM	HEBEL HAANDTAG	045L
36		86985922		1	SPRING RESORTE	MOLLA MOLA	RESSORT VEER	FEDER FJEDER	100M
37		838-3826		1	PIN 8 x 26 mm PERNO	PERNO PERNO	AXE PEN	BOLZEN STIFT	080P
		450612A1		1	FRAME ASSY Inc. 40 - 50 BASTIDOR (CONJUNTO)	GRUPPO TELAIO ESTRUTURA CONJUNTO	BATI (ASSEMBLE) FRAME ASSY	RAHMEN (KPLT.) FRAME ASSY	P432
40		450613A1		1	FRAME BASTIDOR	TELAIO ESTRUTURA	CHASSIS RAAM	GESTELL RAMME	077T
41		86984635		1	PIN PERNO	PERNO PERNO	AXE PEN	BOLZEN STIFT	080P
42		86990332		1	CIRCLIP RETENEDOR	ANELLO DI RITEGNO FREIO DE MOLA	CIRCLIP BORGVEER	HALTERING LAASERING	056A
43		86984638		1	PLATE PLACA	PIASTRA CHAPA	PLAQUE PLAAT	PLATTE PLADE	105P

09-60		p3	11/04

TRAILER HITCH - AUTO CLEVIS, 38 MM, GERMANY ONLY (CBM)
ATTACCO DEL RIMORCHIO - MANIGLIONE CON PERNO AUTOMATICO, 38 MM, SOLO PER LA GERMANIA (CBM)
ATTELAGE DE LA REMORQUE - CHAPE AUTOMATIQUE, 38 MM, ALLEMAGNE UNIQUEMENT (CBM)
ANHÄNGERKUPPLUNG - 38 MM-AUTOMATISCHE GABEL, NUR DEUTSCHLAND (CBM)

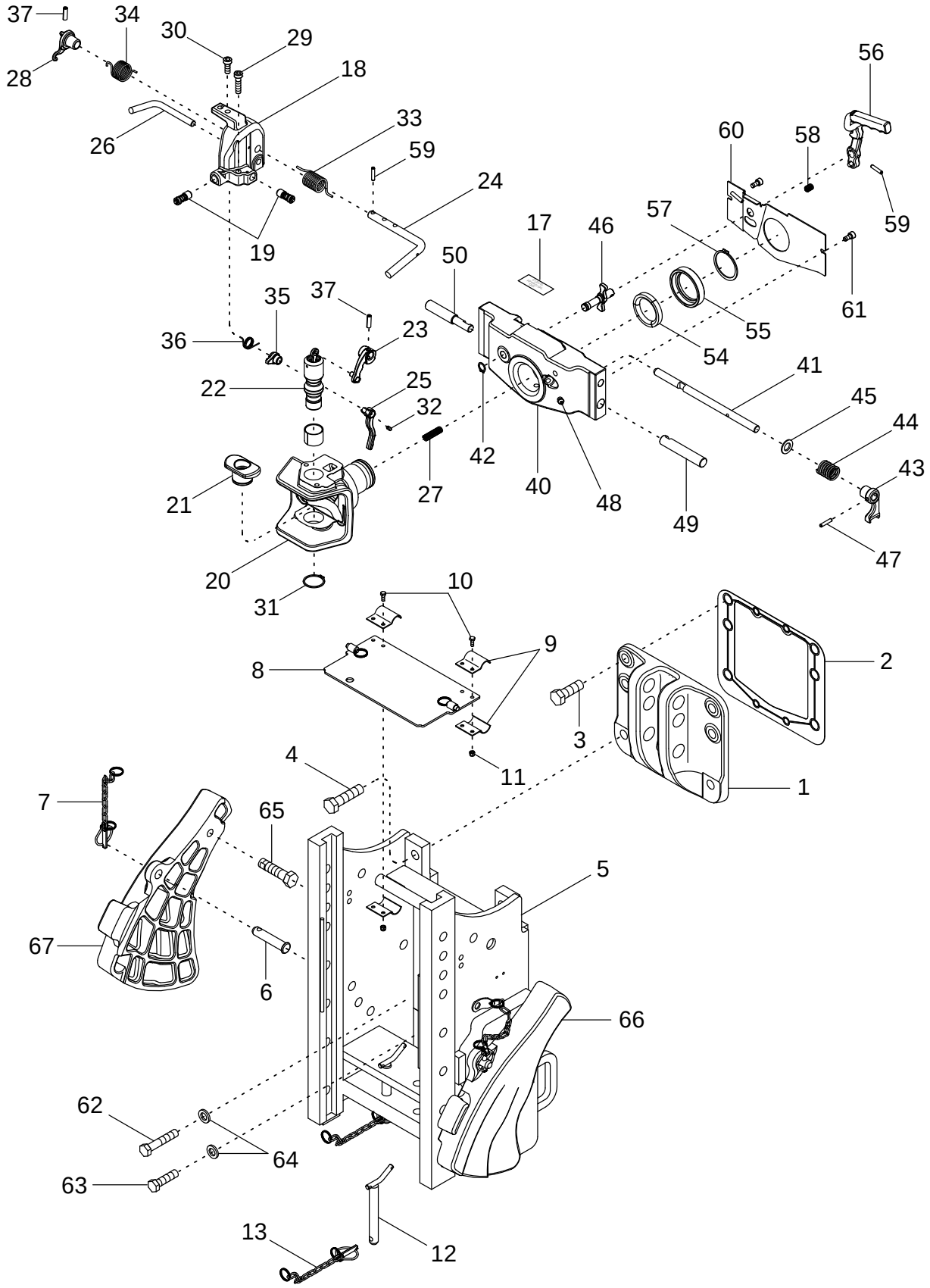

ENGANCHE DEL REMOLQUE - GANCHO AUTOMÁTICO, 38 MM, SÓLO ALEMANIA (CBM)
FORQUILHA AUTOMÁTICA (38 MM) DO ENGATE DO REBOQUE, APENAS NA ALEMANHA (CBM)
TREKHAAK OPLEGGER - AUTO-GAFFEL, 38 MM, UITSLUITEND DUITSLAND (CBM)
ANHÆNGERTRÆK - AUTOMATISK TRÆKBØJLE, 38 MM, KUN TYSKLAND (CBM)

R	N	P.N.	MOD	Q	Description Denominacion	Descrizione Denominação	Description Beschrijving	Bezeichnung Beskrivelse	L.C.
44		86984626		1	SPRING, COMPRESSION MUELLE COMPRESOR	MOLLA, COMPRESSIONE MOLA DE COMPRESAO	RESSORT DE COMPRES SPRING, COMPRESSION	DRUCKFEDER SPRING, COMPRESSION	Z641
45		896-11014		1	WASHER 15,5 x 28 x 3 mm ARANDELA	ROSETTA PIANA ANILHA	RONDELLE SLUITRING	SCHEIBE FLADSKIVE	9720
46		451837A1		1	PIN PERNO	PERNO PERNO	AXE PEN	BOLZEN STIFT	080P
47		838-3630		1	PIN PERNO	PERNO PERNO	AXE PEN	BOLZEN STIFT	6200
48		1974039C1		1	FITTING CONEXION	RACCORDO CONEXAO	RACCORD FITTING	ANSCHLUSSSTÜCK FITTING	3300
49		86984640		1	PIN PERNO	PERNO PERNO	AXE PEN	BOLZEN STIFT	080P
50		86984632		1	PIN PERNO	PERNO PERNO	AXE PEN	BOLZEN STIFT	080P
54		86985916		1	COLLAR ABRAZADERA	FASCETTA COLAR	COLLIER SPANKRAAG	FLANSCH SLANGEBAAND	031F
55		86988005		1	BUSHING CASQUILLO	BOCCOLA CASQUILHO	BAGUE LAGERBUS	BUECHSE BOESNING	095B
56		86984629		1	LEVER PALANCA	LEVA ALAVANCA	LEVIER HEFBOOM	HEBEL HAANDTAG	045L
57		800-1160		1	CIRCLIP RETENEDOR	ANELLO DI RITEGNO FREIO DE MOLA	CIRCLIP BOORGVEER	HALTERING LÃSERING	P019
58		86988211		1	SPRING RESORTE	MOLLA MOLA	RESSORT VEER	FEDER FJEDER	100M
59		838-3630		1	PIN PERNO	PERNO PERNO	AXE PEN	BOLZEN STIFT	6200
60		86988189		1	PLATE PLACA	PIASTRA CHAPA	PLAQUE PLAAT	PLATTE PLADE	105P
61		614-6012		1	SCREW M6 x 12; 8.8 TORNILLO	VITE PARAFUSO	VIS SCHROEF	SCHRAUBE SKRUE	7450
62		828-16060		6	SCREW M16 x 60; 10.9 TORNILLO	VITE PARAFUSO	VIS SCHROEF	SCHRAUBE SKRUE	7450
63		828-16085		2	SCREW M16 x 85; 10.9 TORNILLO	VITE PARAFUSO	VIS SCHROEF	SCHRAUBE SKRUE	7450
64		896-12016		8	WASHER 17,5 x 30 x 4 mm ARANDELA	ROSETTA PIANA ANILHA	RONDELLE SLUITRING	SCHEIBE FLADSKIVE	9720
65		804-20080		2	SCREW M20 x 80; 10.9 TORNILLO	VITE PARAFUSO	VIS SCHROEF	SCHRAUBE SKRUE	040V
66		293792A5		1	CAM Right Hand LEVA	CAMMA EXCENTRICO	CAME NOK	NOCKEN KAM	040C
67		293789A5		1	CAM Left Hand LEVA	CAMMA EXCENTRICO	CAME NOK	NOCKEN KAM	040C

09-61		p1	11/04

TRAILER HITCH - MANUAL PIN, ITALY ONLY (CBM)
ATTACCO DEL RIMORCHIO - PERNO MANUALE, SOLO PER L'ITALIA (CBM)
ATTELAGE DE LA REMORQUE - BROCHE MANUELLE, ITALIE UNIQUEMENT (CBM)
ANHÄNGERKUPPLUNG - HANDBOLZEN, NUR ITALIEN (CBM)

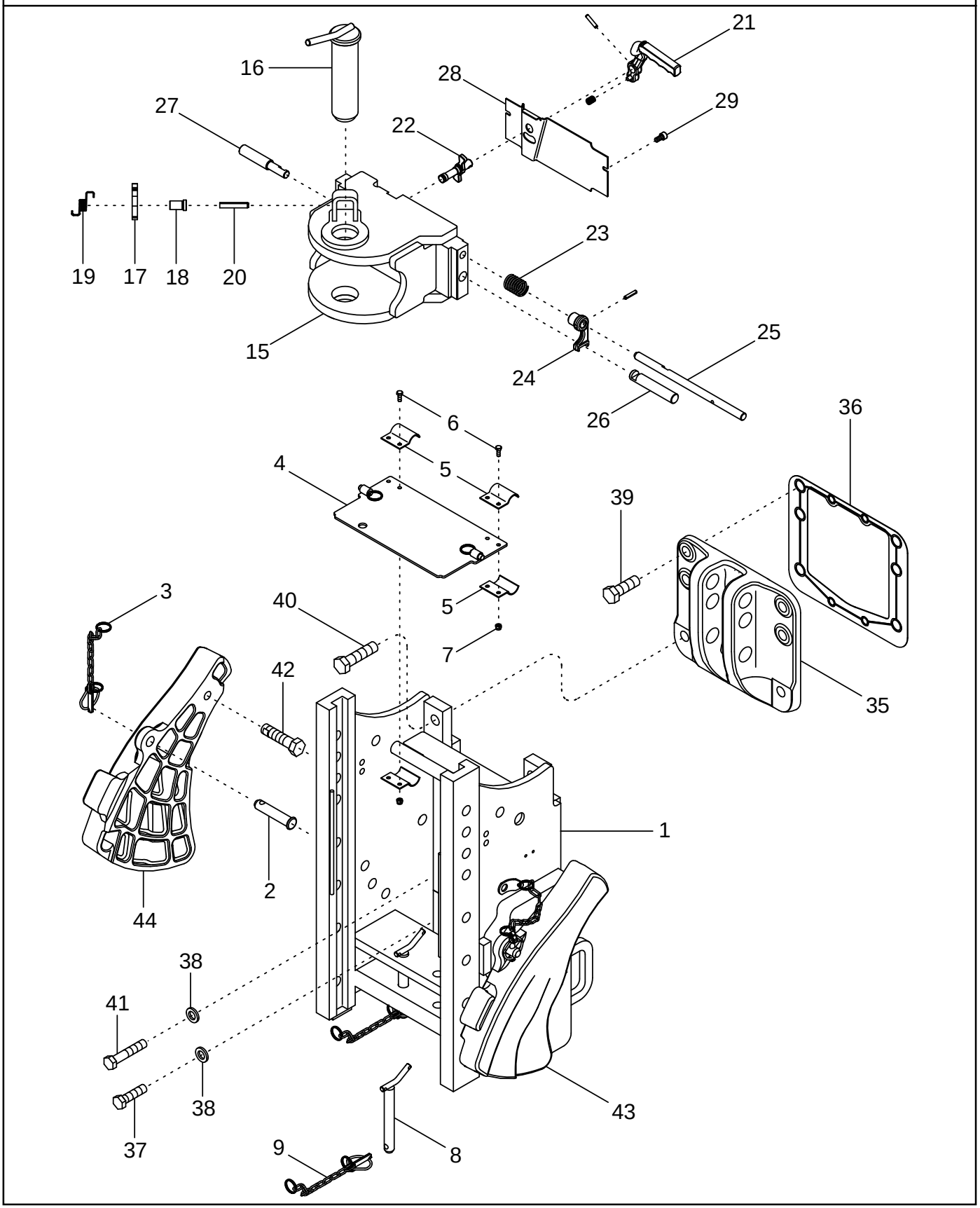

ENGANCHE DEL REMOLQUE - PASADOR MANUAL, SÓLO ITALIA (CBM)
ATTACCO DEL RIMORCHIO - PERNO MANUALE, SOLO PER L'ITALIA (CBM)
TREKHAAK OPLEGGER - HANDPEN, UITSLUITEND ITALIË (CBM)
ANHÆNGERTRÆK - MANUEL SPLIT, KUN ITALIEN (CBM)

R	N	P.N.	MOD	Q	Description Denominacion	Descrizione Denominação	Description Beschrijving	Bezeichnung Beskrivelse	L.C.
	1	447218A1		1	FRAME ASSY Inc. 1 - 9 BASTIDOR (CONJUNTO)	GRUPPO TELAIO ESTRUTURA CONJUNTO	BATI (ASSEMBLE) FRAME ASSY	RAHMEN (KPLT.) FRAME ASSY	P432
	2	447408A1		1	FRAME ASSY Inc. 1 - 9 BASTIDOR (CONJUNTO)	GRUPPO TELAIO ESTRUTURA CONJUNTO	BATI (ASSEMBLE) FRAME ASSY	RAHMEN (KPLT.) FRAME ASSY	P432
1	1	449065A1		1	BRACKET PIEZA DE SOPORTE	STAFFA BRACADEIRA	PATTE FIXATION STEUNBEUGEL	HALTERUNG BESLAG	225S
1	2	449059A1		1	BRACKET PIEZA DE SOPORTE	STAFFA BRACADEIRA	PATTE FIXATION STEUNBEUGEL	HALTERUNG BESLAG	225S
2		449067A1		2	PIN PERNO	PERNO PERNO	AXE PEN	BOLZEN STIFT	080P
3		449060A1		2	CHAIN CADENA	CATENA CORRENTE	CHAINE KETTING	KETTE KÆDE	095C
4	1	449070A1		1	GUARD ASSY. GUARDA (CONJUNTO)	GRUPPO PROTEZIONE PROTECTOR CONJUNTO	GARANT (ASSEMBLE) GUARD ASSY.	SCHUTZ (KPLT.) GUARD ASSY.	P539
4	2	449062A1		1	GUARD ASSY. GUARDA (CONJUNTO)	GRUPPO PROTEZIONE PROTECTOR CONJUNTO	GARANT (ASSEMBLE) GUARD ASSY.	SCHUTZ (KPLT.) GUARD ASSY.	P539
5		449066A1		4	PLATE PLACA	PIASTRA CHAPA	PLAQUE PLAAT	PLATTE PLADE	105P
6		614-6020		4	BOLT M6 x 20; 8.8 TORNILLO	BULLONE PARAFUSO	BOULON BOUT	SCHAUBENBOLZEN SKRUE	140B
7		832-10406		4	NUT M6; 8 TUERCA	DADO PORCA	ECROU MOER	MUTTER MØTRIK	5780
		449061A1		2	PIN ASSY. Inc. 8, 9 PASADOR (CONJUNTO)	GRUPPO SPINA PINO CONJUNTO	CHEVILLE (ASSEMBLEE) PIN ASSY.	STIFT (KPLT.) PIN ASSY.	P524
8		450465A1		1	PIN PERNO	PERNO PERNO	AXE PEN	BOLZEN STIFT	080P
9		449060A1		1	CHAIN CADENA	CATENA CORRENTE	CHAINE KETTING	KETTE KÆDE	095C
		447217A1		1	CLEVIS Inc. 15 - 29 HORQUILLA PEQUENA	FORCELLINO FORQUILHA	FOURCHETTE GAFFEL	GABELKOPF GAFFELBOLT	084F
15		86984195		1	BRACKET PIEZA DE SOPORTE	STAFFA BRACADEIRA	PATTE FIXATION STEUNBEUGEL	HALTERUNG BESLAG	225S
16		86984134		1	PIN ASSY. PASADOR (CONJUNTO)	GRUPPO SPINA PINO CONJUNTO	CHEVILLE (ASSEMBLEE) PIN ASSY.	STIFT (KPLT.) PIN ASSY.	P524
17		86984137		1	LEVER PALANCA	LEVA ALAVANCA	LEVIER HEFBOOM	HEBEL HAANDTAG	045L
18		86984643		1	SPACER SEPARADOR	DISTANZIALE ESPACADOR	ENTRETOISE AFSTANDSRING	DISTANZSTÜCK AFSTANDSSTYKKE	075D
19		86984136		1	TORSION SPRING MUELLE TORSION	MOLLA DI TORSIONE MOLA DE TORCAO	RESSORT DE TORSION TORSION SPRING	TORSIONFEDER VRIDNINGSFJEDER	Z619
20		838-31055		1	PIN PERNO	PERNO PERNO	AXE PEN	BOLZEN STIFT	080P
21		86984629		1	LEVER PALANCA	LEVA ALAVANCA	LEVIER HEFBOOM	HEBEL HAANDTAG	045L
22		451837A1		1	PIN PERNO	PERNO PERNO	AXE PEN	BOLZEN STIFT	080P

(1) With 35 mm (1-3/8 inch) PTO Shaft
(2) With 45 mm (1-3/4 inch) PTO Shaft

09-61		p2	11/04

TRAILER HITCH - MANUAL PIN, ITALY ONLY (CBM)
ATTACCO DEL RIMORCHIO - PERNO MANUALE, SOLO PER L'ITALIA (CBM)
ATTELAGE DE LA REMORQUE - BROCHE MANUELLE, ITALIE UNIQUEMENT (CBM)
ANHÄNGERKUPPLUNG - HANDBOLZEN, NUR ITALIEN (CBM)

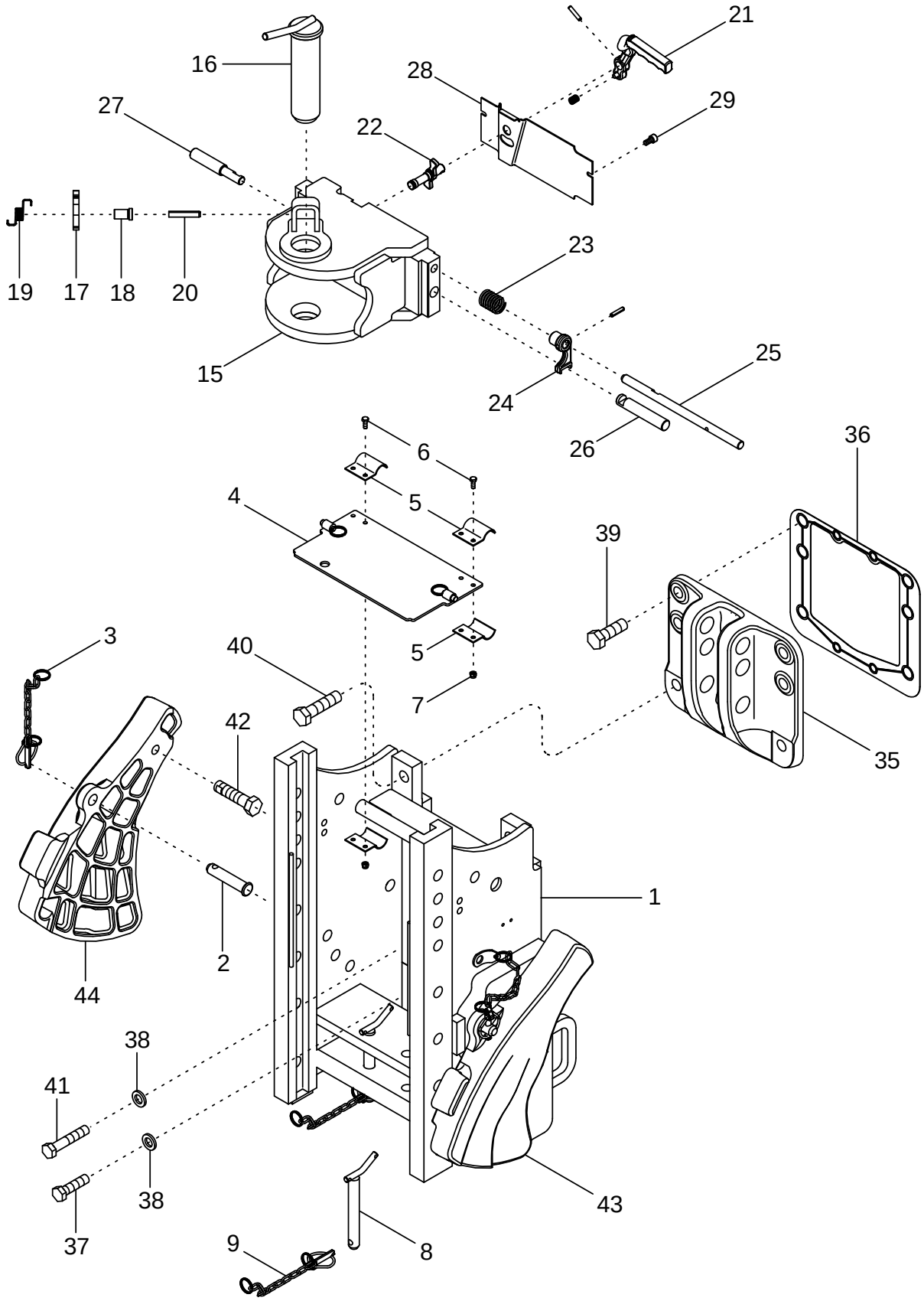

ENGANCHE DEL REMOLQUE - PASADOR MANUAL, SÓLO ITALIA (CBM)
ATTACCO DEL RIMORCHIO - PERNO MANUALE, SOLO PER L'ITALIA (CBM)
TREKHAAK OPLEGGER - HANDPEN, UITSLUITEND ITALIË (CBM)
ANHÆNGERTRÆK - MANUEL SPLIT, KUN ITALIEN (CBM)

R	N	P.N.	MOD	Q	Description Denominacion	Descrizione Denominação	Description Beschrijving	Bezeichnung Beskrivelse	L.C.
23		86984626		1	SPRING, COMPRESSION MUELLE COMPRESOR	MOLLA, COMPRESSIONE MOLA DE COMPRESAO	RESSORT DE COMPRES SPRING, COMPRESSION	DRUCKFEDER SPRING, COMPRESSION	Z641
24		86984638		1	PLATE PLACA	PIASTRA CHAPA	PLAQUE PLAAT	PLATTE PLADE	105P
25		86984635		1	PIN PERNO	PERNO PERNO	AXE PEN	BOLZEN STIFT	080P
26		86984640		1	PIN PERNO	PERNO PERNO	AXE PEN	BOLZEN STIFT	080P
27		86984632		1	PIN PERNO	PERNO PERNO	AXE PEN	BOLZEN STIFT	080P
28		86984642		1	PLATE PLACA	PIASTRA CHAPA	PLAQUE PLAAT	PLATTE PLADE	105P
29		615-6012		2	SCREW M6 x 12; 8.8 TORNILLO	VITE PARAFUSO	VIS SCHROEF	SCHRAUBE SKRUE	7450
35		377206A2		1	SUPPORT SOPORTE	SUPPORTO SUPORTE	SUPPORT STEUN	STÜTZE BESLAG	300S
36		379145A1		1	GASKET JUNTA HERMETICA	GUARNIZIONE JUNTA	JOINT DICHTINGSSTUK	DICHTUNG, FLACH PAKNING	123G
37		828-16060		6	SCREW M16 x 60; 10.9 TORNILLO	VITE PARAFUSO	VIS SCHROEF	SCHRAUBE SKRUE	7450
38		896-12016		8	WASHER 17,5 x 30 x 4 mm ARANDELA	ROSETTA PIANA ANILHA	RONDELLE SLUITRING	SCHEIBE FLADSKIVE	9720
39		628-20060		4	SCREW M20 x 60; 10.9 TORNILLO	VITE PARAFUSO	VIS SCHROEF	SCHRAUBE SKRUE	7450
40		828-20080		2	SCREW M20 x 80; 10.9 TORNILLO	VITE PARAFUSO	VIS SCHROEF	SCHRAUBE SKRUE	7450
41		828-16080		2	SCREW M16 x 80; 10.9 TORNILLO	VITE PARAFUSO	VIS SCHROEF	SCHRAUBE SKRUE	7450
42		804-20080		2	SCREW M20 x 80; 10.9 TORNILLO	VITE PARAFUSO	VIS SCHROEF	SCHRAUBE SKRUE	040V
43		293792A5		1	CAM Right Hand LEVA	CAMMA EXCENTRICO	CAME NOK	NOCKEN KAM	040C
44		293789A5		1	CAM Left Hand LEVA	CAMMA EXCENTRICO	CAME NOK	NOCKEN KAM	040C

DECALS
ETICHETTE DI SICUREZZA
ADHÉSIFS
AUFKLEBER

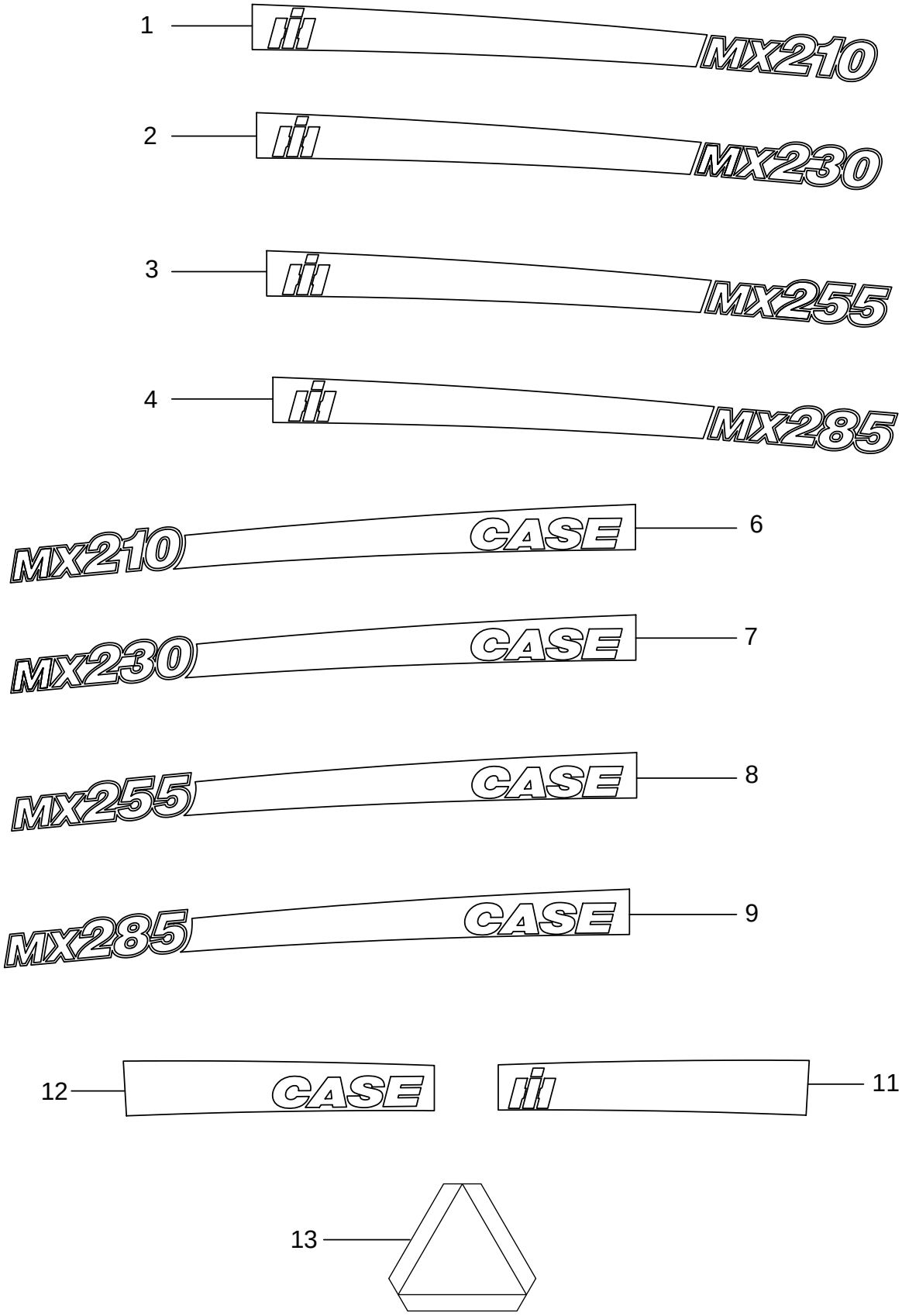

CALCOMANÍAS
AUTOCOLANTES
STICKERS
MÆRKATER

R	N	P.N.	MOD	Q	Description Denominacion	Descrizione Denominação	Description Beschrijving	Bezeichnung Beskrivelse	L.C.
1		447248A1		1	DECAL Right Hand CALCOMANIA	DECALCOMANIA DECALCOMANIA	DECALCOMANIE DECAL	ABZIEHBILD TRANSFER	012D
2		447250A1		1	DECAL Right Hand CALCOMANIA	DECALCOMANIA DECALCOMANIA	DECALCOMANIE DECAL	ABZIEHBILD TRANSFER	012D
3		447252A1		1	DECAL Right Hand CALCOMANIA	DECALCOMANIA DECALCOMANIA	DECALCOMANIE DECAL	ABZIEHBILD TRANSFER	012D
4		447254A1		1	DECAL Right Hand CALCOMANIA	DECALCOMANIA DECALCOMANIA	DECALCOMANIE DECAL	ABZIEHBILD TRANSFER	012D
6		447249A1		1	DECAL Left Hand CALCOMANIA	DECALCOMANIA DECALCOMANIA	DECALCOMANIE DECAL	ABZIEHBILD TRANSFER	012D
7		447251A1		1	DECAL Left Hand CALCOMANIA	DECALCOMANIA DECALCOMANIA	DECALCOMANIE DECAL	ABZIEHBILD TRANSFER	012D
8		447253A1		1	DECAL Left Hand CALCOMANIA	DECALCOMANIA DECALCOMANIA	DECALCOMANIE DECAL	ABZIEHBILD TRANSFER	012D
9		447255A1		1	DECAL Left Hand CALCOMANIA	DECALCOMANIA DECALCOMANIA	DECALCOMANIE DECAL	ABZIEHBILD TRANSFER	012D
11		315181A4		1	DECAL Left Hand CALCOMANIA	DECALCOMANIA DECALCOMANIA	DECALCOMANIE DECAL	ABZIEHBILD TRANSFER	P903
12		303198A4		1	DECAL Right Hand CALCOMANIA	DECALCOMANIA DECALCOMANIA	DECALCOMANIE DECAL	ABZIEHBILD TRANSFER	P903
13		311858A1		1	DECAL SMV Emblem CALCOMANIA	DECALCOMANIA DECALCOMANIA	DECALCOMANIE DECAL	ABZIEHBILD TRANSFER	012D

09-63		p1	11/04

DECALS - STEYR
ETICHETTE DI SICUREZZA - STEYR
ADHÉSIFS -STEYR
AUFKLEBER FÜR STEYR

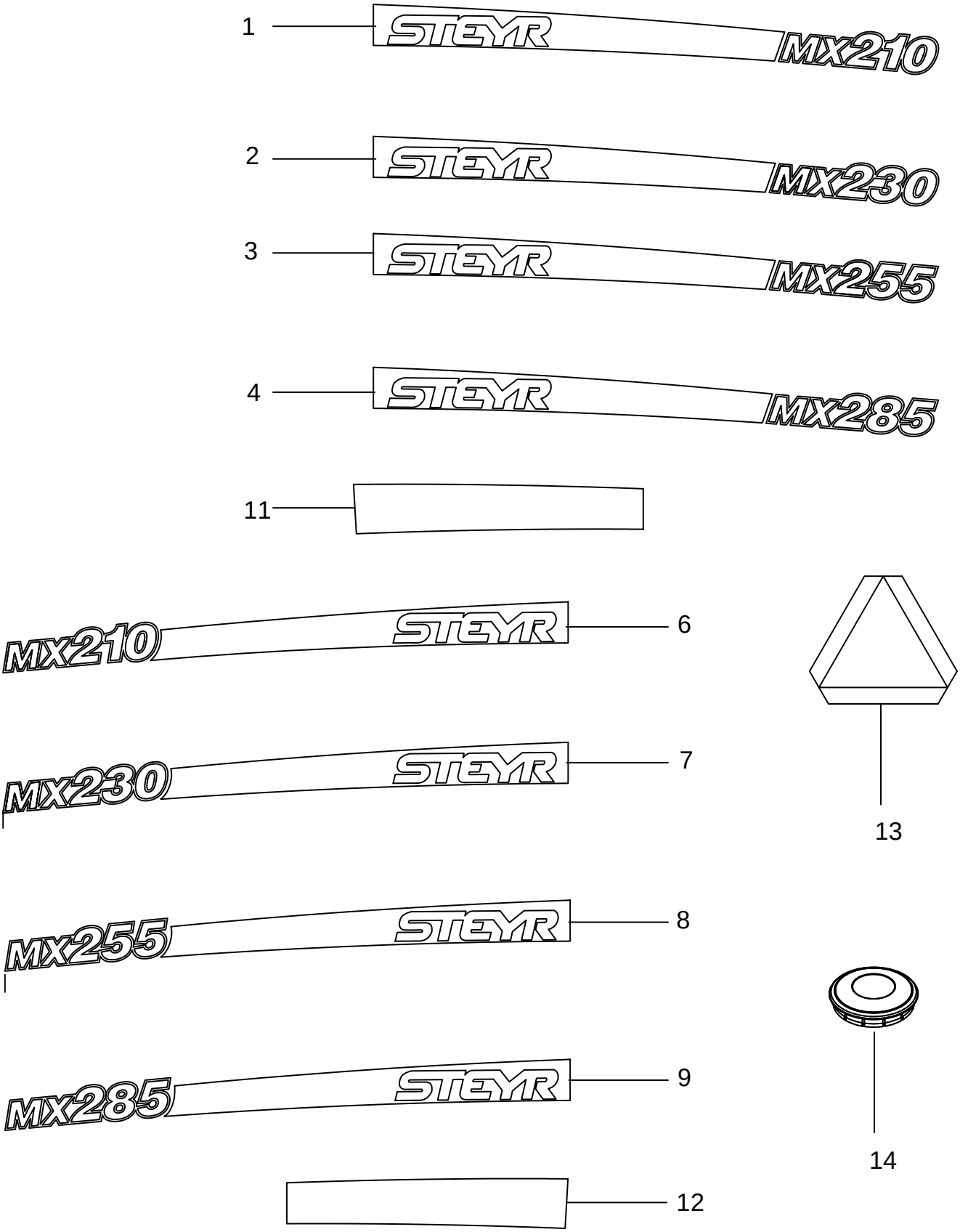

CALCOMANÍAS - STEYR
AUTOCOLANTES STEYR
STICKERS - STEYR
MÆRKATER - STEYR

R	N	P.N.	MOD	Q	Description Denominacion	Descrizione Denominação	Description Beschrijving	Bezeichnung Beskrivelse	L.C.
1		86993610		1	DECAL Right Hand CALCOMANIA	DECALCOMANIA DECALCOMANIA	DECALCOMANIE DECAL	ABZIEHBILD TRANSFER	012D
2		86993612		1	DECAL Right Hand CALCOMANIA	DECALCOMANIA DECALCOMANIA	DECALCOMANIE DECAL	ABZIEHBILD TRANSFER	012D
3		86993614		1	DECAL Right Hand CALCOMANIA	DECALCOMANIA DECALCOMANIA	DECALCOMANIE DECAL	ABZIEHBILD TRANSFER	012D
4		86993616		1	DECAL Right Hand CALCOMANIA	DECALCOMANIA DECALCOMANIA	DECALCOMANIE DECAL	ABZIEHBILD TRANSFER	012D
6		86993609		1	DECAL Left Hand CALCOMANIA	DECALCOMANIA DECALCOMANIA	DECALCOMANIE DECAL	ABZIEHBILD TRANSFER	012D
7		86993611		1	DECAL Left Hand CALCOMANIA	DECALCOMANIA DECALCOMANIA	DECALCOMANIE DECAL	ABZIEHBILD TRANSFER	012D
8		86993613		1	DECAL Left Hand CALCOMANIA	DECALCOMANIA DECALCOMANIA	DECALCOMANIE DECAL	ABZIEHBILD TRANSFER	012D
9		86993615		1	DECAL Left Hand CALCOMANIA	DECALCOMANIA DECALCOMANIA	DECALCOMANIE DECAL	ABZIEHBILD TRANSFER	012D
11		86993618		1	DECAL Right Hand CALCOMANIA	DECALCOMANIA DECALCOMANIA	DECALCOMANIE DECAL	ABZIEHBILD TRANSFER	012D
12		86993617		1	DECAL Left Hand CALCOMANIA	DECALCOMANIA DECALCOMANIA	DECALCOMANIE DECAL	ABZIEHBILD TRANSFER	012D
13		311858A1		1	DECAL SMV Emblem CALCOMANIA	DECALCOMANIA DECALCOMANIA	DECALCOMANIE DECAL	ABZIEHBILD TRANSFER	012D
14		348390A1		1	CAP ASSY. CACHUCHA (CONJUNTO	GRUPPO TAPPO TAMPA CONJUNTO	CACHE ASSEMBLE CAP ASSY.	KAPPE (KPLT.) CAP ASSY.	P480

DECALS
ETICHETTE DI SICUREZZA
ADHÉSIFS
AUFKLEBER

1

2

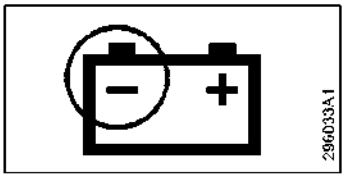

3

4

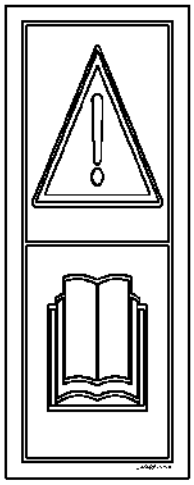

5

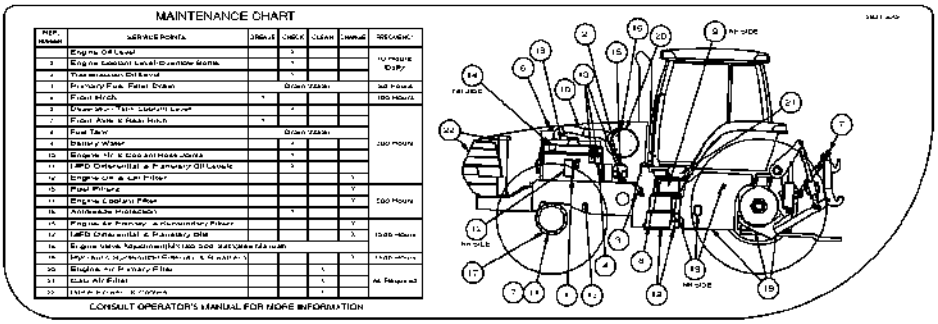

6

7

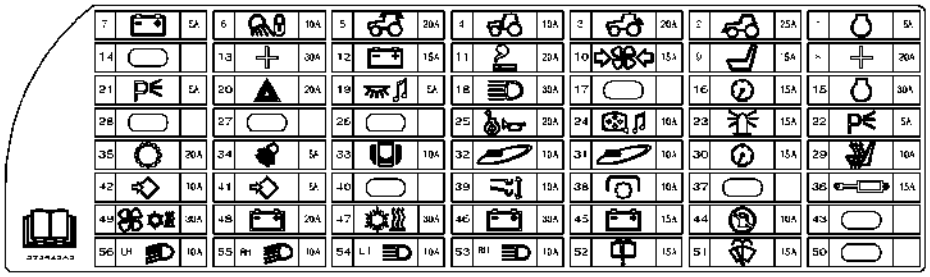

8

IMPORTANT
Failures due to use of improper fluid are not covered by warranty. For maximum protection use CASE IH HY-TRAN® ULTRA and FILTERS.

9

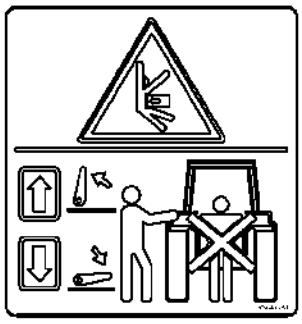

10

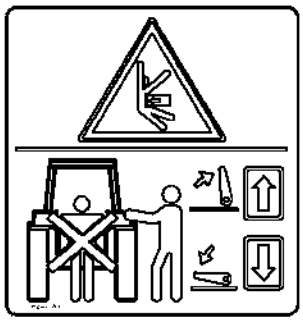

11

CALCOMANÍAS
AUTOCOLANTES
STICKERS
MÆRKATER

R	N	P.N.	MOD	Q	Description Denominacion	Descrizione Denominação	Description Beschrijving	Bezeichnung Beskrivelse	L.C.
1		296030A1		1	DECAL Quality Assurance	DECALCOMANIA	DECALCOMANIE	ABZIEHBILD	P903
					CALCOMANIA	DECALCOMANIA	DECAL	TRANSFER	
2		296033A1		1	DECAL Negative Jump Start				
						DECALCOMANIA	DECALCOMANIE	ABZIEHBILD	012D
					CALCOMANIA	DECALCOMANIA	DECAL	TRANSFER	
3		A189007		1	DECAL Warranty, Fuel Pump - English				
						DECALCOMANIA	DECALCOMANIE	ABZIEHBILD	012D
					CALCOMANIA	DECALCOMANIA	DECAL	TRANSFER	
4		249806A1		1	DECAL Read Operator Manual				
						DECALCOMANIA	DECALCOMANIE	ABZIEHBILD	012D
					CALCOMANIA	DECALCOMANIA	DECAL	TRANSFER	
5		283118A2	a	1	DECAL Maintenance Schedule				
						DECALCOMANIA	DECALCOMANIE	ABZIEHBILD	012D
					CALCOMANIA	DECALCOMANIA	DECAL	TRANSFER	
6		296042A1		1	DECAL Warning, Avoid Injury				
						DECALCOMANIA	DECALCOMANIE	ABZIEHBILD	012D
					CALCOMANIA	DECALCOMANIA	DECAL	TRANSFER	
7		372943A2		1	DECAL Fuse Location	DECALCOMANIA	DECALCOMANIE	ABZIEHBILD	012D
					CALCOMANIA	DECALCOMANIA	DECAL	TRANSFER	
8		1334594C3		1	DECAL Hy-Tran Fluid - English				
						DECALCOMANIA	DECALCOMANIE	ABZIEHBILD	012D
					CALCOMANIA	DECALCOMANIA	DECAL	TRANSFER	
8		1334595C3		1	DECAL Hy-Tran Fluid - Spanish				
						DECALCOMANIA	DECALCOMANIE	ABZIEHBILD	012D
					CALCOMANIA	DECALCOMANIA	DECAL	TRANSFER	
8		1955230C2		1	DECAL Hy-Tran Fluid - French				
						DECALCOMANIA	DECALCOMANIE	ABZIEHBILD	012D
					CALCOMANIA	DECALCOMANIA	DECAL	TRANSFER	
8		1334597C3		1	DECAL Hy-Tran Fluid - German				
						DECALCOMANIA	DECALCOMANIE	ABZIEHBILD	012D
					CALCOMANIA	DECALCOMANIA	DECAL	TRANSFER	
8		1955362C2		1	DECAL Hy-Tran Fluid - Italian				
						DECALCOMANIA	DECALCOMANIE	ABZIEHBILD	012D
					CALCOMANIA	DECALCOMANIA	DECAL	TRANSFER	
8		1955361C3		1	DECAL Hy-Tran Fluid - Finnish				
						DECALCOMANIA	DECALCOMANIE	ABZIEHBILD	012D
					CALCOMANIA	DECALCOMANIA	DECAL	TRANSFER	
8		1955231C2		1	DECAL Hy-Tran Fluid - Swedish				
						DECALCOMANIA	DECALCOMANIE	ABZIEHBILD	012D
					CALCOMANIA	DECALCOMANIA	DECAL	TRANSFER	
8		1955359C2		1	DECAL Hy-Tran Fluid - Dutch				
						DECALCOMANIA	DECALCOMANIE	ABZIEHBILD	012D
					CALCOMANIA	DECALCOMANIA	DECAL	TRANSFER	
8		1955463C2		1	DECAL Hy-Tran Fluid - Hungarian				
						DECALCOMANIA	DECALCOMANIE	ABZIEHBILD	012D
					CALCOMANIA	DECALCOMANIA	DECAL	TRANSFER	

(a) BSN JAZ132277

DECALS
ETICHETTE DI SICUREZZA
ADHÉSIFS
AUFKLEBER

1

2

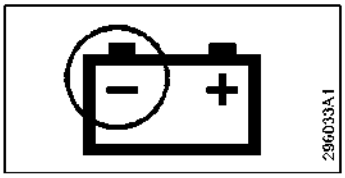

3

4

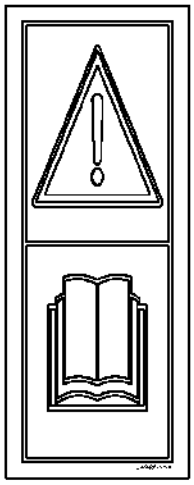

5

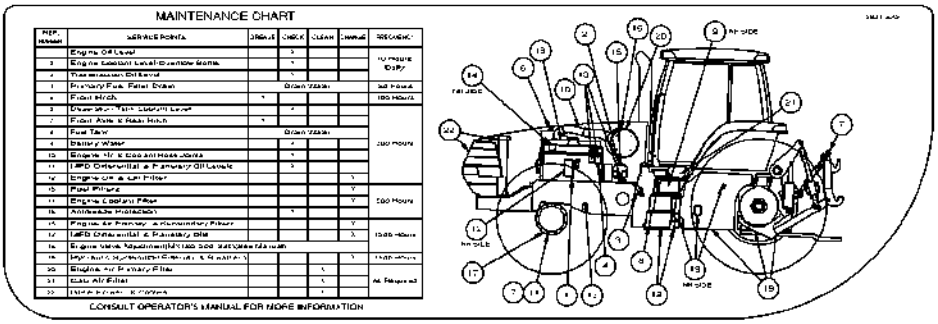

6

7

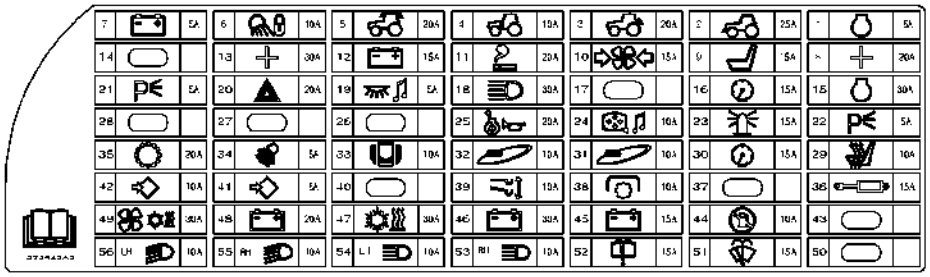

8

IMPORTANT
Failures due to use of improper fluid are not covered by warranty. For maximum protection use CASE IH HY-TRAN® ULTRA and FILTERS.

9

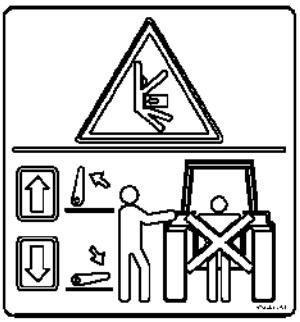

10

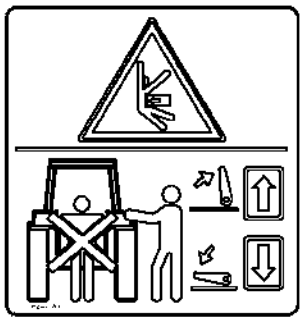

CALCOMANÍAS
AUTOCOLANTES
STICKERS
MÆRKATER

R	N	P.N.	MOD	Q	Description Denominacion	Descrizione Denominação	Description Beschrijving	Bezeichnung Beskrivelse	L.C.
8		1955494C2		1	DECAL Hy-Tran Fluid - Polish				
						DECALCOMANIA	DECALCOMANIE	ABZIEHBILD	012D
					CALCOMANIA	DECALCOMANIA	DECAL	TRANSFER	
8		1348489C2		1	DECAL Hy-Tran Fluid - Russian				
						DECALCOMANIA	DECALCOMANIE	ABZIEHBILD	012D
					CALCOMANIA	DECALCOMANIA	DECAL	TRANSFER	
8		378683A1		1	DECAL Hy-Tran Fluid - Czech Rep				
						DECALCOMANIA	DECALCOMANIE	ABZIEHBILD	012D
					CALCOMANIA	DECALCOMANIA	DECAL	TRANSFER	
8		378684A1		1	DECAL Hy-Tran Fluid - Romania				
						DECALCOMANIA	DECALCOMANIE	ABZIEHBILD	012D
					CALCOMANIA	DECALCOMANIA	DECAL	TRANSFER	
9		302435A1		1	DECAL Hitch, Left Hand	DECALCOMANIA	DECALCOMANIE	ABZIEHBILD	012D
					CALCOMANIA	DECALCOMANIA	DECAL	TRANSFER	
10		302437A1		1	DECAL Hitch, Right Hand	DECALCOMANIA	DECALCOMANIE	ABZIEHBILD	012D
					CALCOMANIA	DECALCOMANIA	DECAL	TRANSFER	
11		1532083C1		1	DECAL 40KM/H	DECALCOMANIA	DECALCOMANIE	ABZIEHBILD	012D
					CALCOMANIA	DECALCOMANIA	DECAL	TRANSFER	

Number	Figure	Sequence	Ref.
{87424887}	08-10		1
100-11200	06-19		27
100-11237	06-38		33
100-11293	06-10		2
	06-11		7
100-11306	06-19		21
100-1187	02-29		33
100-1450	07-06		20
100-21112	06-41		47
100-21131	05-21		27
100-21150	05-22		27
100-21175	02-42		4
	02-43		4
100-21244	02-12		8
100-21250	02-11		8
100-2131	06-06		13
	06-07		7
	06-17		34
100-2587	02-13		20
100-28162	08-23		8
101-11225	06-19		3
101-11250	06-20		10
101-11275	06-34		14
	06-35		14
101-11350	06-34		9
	06-35		9
101-11400	06-23		8
	06-40		17
101-11475	06-39		17
101-21325	06-02		26
101-21412	06-23		6
	07-10		15
101-21433	06-38		35
101588A2	06-45		42
102-22318	06-41		63
103-3350	03-16		42
	03-17		22
103213A1	09-36		4
103226A1	09-36		5
104033C2	09-10		10
	09-10		4
	09-10		8
	09-16		10
	09-24		16
	09-26		44
	09-27		4
104593A1	04-20		28
104594A1	04-20		27
105496H	06-02		45
	06-02		8
105497H	06-02		6
	06-09		53
	06-40		36
105503H	06-02		44
	06-02		7
105849A1	04-10		4
1068264C1	06-21		7
107329C1	09-23		12
	09-24		47
107452A1	08-03		39
	08-08		50
107456A1	08-03		40
	08-08		51
107484C1	06-45		45
108326H	06-21		11
109239C2	09-41		10
	09-42		10
1094368R1	04-28		30
109511A1	04-35		12
109619A1	07-16		34
	07-17		35
110042C1	06-21		13
112299A2	06-19		15
112329A2	06-19		19
112329A3	06-19		19
112822R91	06-23		75
117853A1	06-23		28
	07-10		19
118421A1	07-10		43
118576A1	05-04		63
118654A3	06-37		7
118705A1	09-49		13
118707A1	09-49		11
118708A1	09-49		12
118923A2	08-16		28

Number	Figure	Sequence	Ref.
120486C1	07-06		10
120488C2	07-06		11
120503C2	06-22		34
120509C2	06-22		1
120510C2	06-22		1
120511C2	06-22		1
120512C2	06-22		1
120513C2	06-22		1
120514C2	07-06		25
120647C2	06-10		19
	06-11		14
120648C2	06-10		19
	06-11		14
120649C2	06-10		19
	06-11		14
120650C2	06-10		19
	06-11		14
120651C2	06-10		19
	06-11		14
120679C1	06-22		55
120946C1	06-38		22
120947C1	06-38		22
120948C1	06-38		22
120949C1	06-38		22
120965C1	06-21		10
120977C1	06-21		17
120978C1	06-21		17
120979C1	06-21		17
120980C1	06-21		17
121192A1	06-23		18
121410A1	04-11		6
121412A1	04-11		6
121413A1	04-03		8
	04-11		6
121414A1	04-11		6
121415A1	04-03		9
121416A1	04-03		10
	04-11		6
122212A1	09-07		1
123135A1	06-23		15
123517A1	06-23		16
123869R1	06-36		12
124306A1	06-23		68
	07-10		6
124744C1	06-36		14
	06-37		14
1250522C3	09-41		8
	09-42		8
1250594C2	09-39		30
	09-41		41
	09-42		41
1251790C2	03-20		6
1251791C1	03-20		8
1251958C1	06-21		19
1252040C1	09-51		16
125849A1	04-17		1
	04-18		
1259633C3	06-22		7
1259634C3	06-22		9
1259670C2	06-34		1
1259732C1	06-34		13
	06-35		13
1259753C1	06-34		15
	06-35		15
1259828C1	06-39		20
126-124	06-39		15
126844A1	04-13		7
1270697C1	06-22		21
1272399C2	08-10		5
	08-11		23
1277020C2	06-36		15
	06-37		15
1277229C1	05-18		
	05-19		
	05-20		
1277233C1	05-18		47
	05-19		47
	05-20		47
1277234C1	05-18		48
	05-19		48
	05-20		48
1277270C1	05-10		9
	05-11		9
	05-13		9
	05-14		9

Number	Figure	Sequence	Ref.
1277309C1	06-23		24
	06-40		28
	07-10		17
1277343C1	05-21		8
1277344C1	05-21		3
1277405C1	05-16		8
	05-17		8
1280263C1	09-19		53
128114A1	06-08		19
	06-09		19
	06-11		34
	06-12		30
	06-13		30
	06-20		31
	06-23		9
	06-23		9
	06-39		45
	06-40		45
1282082C2	09-49		33
128209A1	09-01		16
	09-13		21
	09-14		21
128297A1	06-23		7
	06-23		73
128483A1	09-38		4
	09-39		29
	09-39		35
	09-39		37
	09-41		42
	09-41		44
	09-42		42
	09-42		44
128484A1	09-39		31
	09-41		46
	09-41		5
	09-42		46
	09-42		5
128485A1	09-39		21
	09-39		26
	09-41		4
	09-41		40
	09-41		47
	09-42		4
	09-42		40
	09-42		47
1285971C1	06-18		35
1285974C1	06-19		31
1285975C2	06-19		32
1285978C1	06-20		11
1285981C1	06-10		11
	06-11		62
1285982C1	06-13		37
1285983C1	06-10		4
	06-11		9
1285985C1	06-08		38
	06-09		38
	06-12		11
1285986C1	06-10		22
	06-11		58
1285987C1	06-12		12
1285989C1	06-10		20
	06-11		61
1285990C1	06-20		15
1285991C2	06-21		3
1285996C1	06-08		23
	06-09		23
	06-11		38
	06-12		34
	06-13		34
	06-18		34
	06-20		35
	06-39		48
	06-40		48
1285997C1	06-13		38
1286000C3	06-10		14
1286001C4	06-13		49
1286012C2	06-08		24
	06-09		24
	06-11		40
	06-12		19
	06-13		19
	06-18		20
	06-20		5
	06-40		9
1286016C1	06-08		39

Number	Figure	Sequence	Ref.
1286016C1	06-09		39
	06-12		10
	06-13		10
1286021C1	06-13		47
1286023C1	06-38		32
1286024C1	06-12		46
	06-23		21
1286025C1	06-18		46
1286026C1	06-08		43
	06-09		43
	06-39		28
	06-40		7
1286027C2	06-19		4
1286028C2	06-20		36
1286038C2	06-20		41
1286039C1	06-08		40
	06-09		40
	06-21		4
1286040C2	06-12		8
	06-18		8
1286041C2	06-20		14
1286042C1	06-08		33
	06-09		33
	06-11		53
	06-12		39
	06-13		39
	06-20		20
1286043C1	06-08		25
	06-09		25
	06-11		41
	06-12		16
	06-13		16
	06-18		14
	06-20		8
	06-40		13
1286052C1	06-08		32
	06-09		32
	06-11		43
	06-12		13
	06-13		13
	06-18		13
	06-20		12
	06-39		50
1286061C1	06-13		50
	06-18		48
1286062C1	06-13		50
	06-18		48
1286063C1	06-13		50
	06-18		48
1286064C1	06-13		50
	06-18		48
1286065C1	06-13		50
	06-18		48
1286066C1	06-20		50
1286067C1	06-20		50
1286068C1	06-20		50
1286069C1	06-20		50
1286070C1	06-20		50
1286071C1	06-08		49
	06-09		49
1286072C1	06-08		49
	06-09		49
1286073C1	06-08		49
	06-09		49
1286074C1	06-08		49
	06-09		49
1286075C1	06-08		49
	06-09		49
1286076C1	06-08		11
	06-09		11
	06-11		25
	06-12		23
	06-13		23
	06-18		23
	06-40		25
1286077C1	06-20		23
	06-39		25
1286079C1	06-08		14
	06-09		14
	06-11		28
	06-12		26
	06-13		26
	06-18		26
	06-20		26
	06-39		22

Number	Figure	Sequence	Ref.
1286079C1	06-40		22
1286081C1	06-08		10
	06-09		10
	06-11		22
	06-12		22
	06-13		22
	06-18		22
	06-20		24
	06-39		24
	06-40		24
1286083C1	06-08		13
	06-09		13
	06-11		27
	06-12		25
	06-13		25
	06-18		25
	06-20		27
	06-39		21
	06-40		21
1286084C1	06-11		2
1286151C1	06-38		11
128647A1	05-10		5
	05-11		5
	05-12		5
	05-13		5
	05-14		5
	05-15		5
1286903C1	09-13		7
	09-14		7
1287608C1	05-16		9
	05-17		9
1289348C1	06-22		22
1289349C1	06-22		19
1289350C1	06-22		20
1301342C1	02-32		8
	02-33		8
1301387C1	09-39		61
1301387C2	09-40		12
131-56	04-18		23
131-642	04-21		13
	09-16		11
131-832	09-26		7
	09-27		31
	09-28		7
131-833	09-10		6
131-839	04-25		10
	09-10		5
	09-26		32
	09-27		8
	09-28		4
	09-44		6
131-887	09-10		50
1312210C2	04-28		32
	04-31		14
	04-31		24
	04-31		4
131432A1	06-21		13
131433A1	06-21		13
131434A1	06-21		13
131853A1	02-08		19
132093A2	06-33		4
132123A1	09-05		14
1321290C2	09-41		48
	09-42		48
1327732C1	06-39		18
1327781C2	09-40		6
1331046C2	04-13		5
	04-15		17
	04-16		17
1331863C2	09-49		17
1331939C1	04-22		14
1334594C3	09-64		8
1334595C3	09-64		8
1334597C3	09-64		8
133519C1	05-06		26
	08-04		58
	08-05		58
	08-16		32
133738A1	04-05		2
1340559C2	09-06		4
	09-07		4
1340664C1	09-06		1
1342253C2	06-10		1
1342268C1	06-37		1
1342318C2	06-11		1
1342495C1	06-08		31
	06-09		31
1342513C1	06-12		37
1342641C1	08-03		17
1342645C3	06-08		22
	06-09		22
	06-11		37
	06-12		33
	06-13		33
	06-18		33
	06-20		34
	06-40		49
1342723C2	07-06		1
1342851C1	06-02		31
	06-08		3
	06-09		3
	06-40		5
1342928C1	07-06		21
1345888C1	06-20		45
1348049C1	09-05		60
1348050C1	09-05		62
1348076C1	09-51		20
1348080C1	09-49		31
1348264C1	02-01		21
	03-21		20
	03-22		20
	03-23		6
	03-24		6
1348335C1	08-03		15
1348337C1	08-03		16
1348399C1	09-17		13
1348465C1	09-11		7
1348489C2	09-64		8
1348540C1	07-13		3
	07-14		3
1349182C1	06-37		
1349183C1	06-37		21
1349184C1	06-37		22
1349198C1	07-06		
1349345C1	06-34		2
1349346C2	06-34		4
1349347C1	06-34		5
	06-35		5
1349348C1	06-34		6
1349350C2	06-34		3
135648A1	05-22		9
135649A1	05-22		4
136-159	07-11		15
	07-12		15
136433A1	06-22		35
	06-22		43
137023A1	06-22		3
138121A1	06-23		25
	07-10		16
138763C91	06-41		25
139059C1	06-22		36
	06-22		44
139060C2	06-22		40
	06-22		45
139241C5	08-03		13
139327C1	06-41		17
	06-43		17
	06-44		17
139719A1	04-11		7
140045	04-27		22
140541A1	04-18		30
140543A1	04-18		20
140545A1	04-18		15
140546A1	04-18		14
140548A1	04-18		18
140549A1	04-18		29
141013A1	09-55		13
	09-58		2
	09-59		2
141014A1	09-55		14
	09-58		3
	09-59		3
141015A1	09-55		
	09-58		
	09-59		
141016A1	09-58		6
	09-59		6
141017A1	09-58		7
	09-59		7
141018A1	09-58		8

Number	Figure	Sequence	Ref.
141018A1	09-59		8
141019A1	09-58		9
	09-59		9
141020A1	09-58		10
	09-59		10
141021A1	09-58		12
	09-59		12
141022A1	09-58		13
	09-59		13
141035A2	09-55		8
141036A1	09-55		9
141038A1	09-55		10
141353A1	04-20		17
141360A1	04-20		31
141361A1	04-20		35
143349A1	07-08		28
	08-06		35
	08-19		29
143906C1	06-21		5
143921C1	06-36		13
	06-37		13
143922C1	06-36		13
	06-37		13
143923C1	06-36		13
	06-37		13
143924C1	06-36		13
	06-37		13
143925C1	06-36		13
	06-37		13
144242C3	06-11		10
144348C1	06-20		4
144417A1	04-10		3
144421A1	04-11		3
148939C1	06-22		4
149011C1	06-38		22
1500341C2	09-40		26
151-535	09-08		33
	09-24		13
	09-26		42
151-537	09-24		41
	09-27		27
151-539	09-10		2
	09-43		6
1530988C1	07-16		1
	07-17		1
1531863C1	07-18		28
1531984C1	07-18		26
1532083C1	09-64		11
1533227C1	09-05		33
1533540C1	03-18		9
	03-19		11
	05-01		14
	07-07		16
1533637C1	09-08		43
1533774C2	07-13		2
	07-14		2
1534229C1	04-08		9
1535219C1	09-23		8
	09-24		18
1535323C1	09-20		24
1542563C1	08-16		
	08-27		
1543329C1	08-16		19
	08-27		8
1546024C1	05-03		45
	05-04		45
	07-02		11
	07-03		11
	07-04		11
	08-04		71
	08-05		71
1546500C1	04-20		41
169850C2	03-22		21
	03-24		21
	04-05		22
	04-08		2
	07-11		16
	07-12		16
175048A1	04-32		1
175163A1	02-02		2
176143A1	07-04		32
176245A2	09-20		11
176246A2	09-20		10
176492A1	07-19		24
176896A1	07-15		10

Number	Figure	Sequence	Ref.
177250A1	04-13		4
177269A1	04-08		14
	04-12		7
	04-33		5
	09-23		7
	09-27		19
177335A3	07-15		21
177336A1	09-58		
	09-59		
178148A1	04-21		2
178345A1	04-29		30
	04-31		
178658A1	09-13		6
	09-14		6
178819A3	09-19		50
178889A1	08-19		28
179657A2	06-45		15
180361A2	09-20		12
1806233C1	03-14		10
1806234C1	03-14		10
1806235C1	03-14		10
1806236C1	03-14		10
1806237C1	03-14		10
1806238C1	03-14		10
1806239C1	03-14		10
1806240C1	03-14		10
1806241C1	03-14		10
1806242C1	03-14		10
1806243C1	03-14		10
1806244C1	03-14		10
1806245C1	03-14		10
1806246C1	03-14		10
1806247C1	03-14		10
1806248C1	03-14		10
1806249C1	03-14		10
1806250C1	03-14		10
1806251C1	03-14		10
1806252C1	03-14		10
1806253C1	03-14		10
1806254C1	03-14		10
1806255C1	03-14		10
1806256C1	03-14		10
1806257C1	03-14		10
1806258C1	03-14		10
1806259C1	03-14		10
1806260C1	03-14		10
1806261C1	03-14		10
1806262C1	03-14		10
1808728C1	03-07		11
1808822C1	03-07		14
182045A1	04-29		37
	04-32		9
	09-22		21
182163A1	04-10		15
182220A1	03-17		13
	03-19		28
	07-11		10
	09-13		19
	09-14		19
	09-15		17
	09-25		8
183038A1	04-21		3
184262A1	09-13		10
	09-14		10
185062R1	09-35		18
185552A2	02-07		1
186149A4	09-20		21
186382A1	07-16		16
	07-17		16
187516A1	06-12		2
	06-18		2
187820A1	04-14		11
188104A1	08-21		1
188105A1	08-21		7
188106A1	08-21		10
188114A1	08-21		16
188116A1	08-21		12
188117A1	08-21		11
188328A1	05-26		3
	05-26		3
	05-26		3
	05-26		3
188333A1	05-25		1
188335A1	05-26		
188338A1	05-25		1

Number	Figure	Sequence	Ref.
188338A1	05-26		1
188339A1	05-26		
188341A1	05-25		1
	05-26		1
188347A2	05-26		
188350A1	05-25		1
188350A2	05-26		1
188419A1	07-01		3
189946A1	09-51		12
19-6258	04-27		23
	09-37		6
190332A1	08-25		11
190752A1	02-07		2
190812A1	09-24		30
191206A3	09-19		9
191348A1	07-15		30
191939A3	09-19		23
192231A1	04-14		25
192337A1	09-13		8
	09-14		8
192791A1	06-32		8
192792A1	06-03		3
	06-04		3
	06-05		3
	06-14		4
	06-15		4
	06-16		4
	06-32		9
192809A1	04-32		2
192869A1	07-01		25
192929A2	09-39		34
193-1000	04-01		9
	04-10		11
	04-21		7
193182A1	07-01		26
193432A2	04-19		1
	04-20		
194199A1	03-21		3
	03-23		3
194319A1	04-11		4
194346A1	02-06		24
	04-01		6
195-81035	09-08		34
195066A3	07-10		40
195067A2	07-10		44
195068A2	07-10		42
195069A2	07-10		45
195118A1	07-10		50
1954059C2	06-20		1
1954146C1	08-11		26
1954223C4	09-49		8
1954736C1	09-40		7
	09-41		32
	09-42		32
1954736C2	09-40		23
1955167C1	04-12		15
1955230C2	09-64		8
1955231C2	09-64		8
1955359C2	09-64		8
1955361C3	09-64		8
1955362C2	09-64		8
1955463C2	09-64		8
1955494C2	09-64		8
1957801C1	08-03		35
	08-04		15
	08-05		15
1960223C1	09-48		4
	09-54		2
1960765C2	09-54		10
1961753C1	05-16		7
	05-17		7
196252A1	03-23		16
1963837C1	06-37		8
1963839C1	06-37		16
1963841C1	06-37		12
1963874C1	06-18		4
1963875C1	06-11		4
	06-12		5
1963876C1	06-19		34
1963888C1	06-08		4
	06-09		4
1963935C2	06-19		45
196466A1	02-36		36
	02-37		37
1964696C2	04-24		15

Number	Figure	Sequence	Ref.
1964696C2	04-24		5
1964725C1	04-18		28
1964726C1	04-18		27
1964727C1	04-18		26
1964728C1	04-18		19
1964729C1	04-18		31
1964730C1	04-18		21
1964731C1	04-18		1
1964732C1	04-18		16
1964733C1	04-18		9
1964734C1	04-18		11
1964736C1	04-18		32
1964737C1	04-18		3
1964738C1	04-18		13
1964806C1	04-31		12
	04-31		2
1964828C1	04-24		6
1964831C2	04-13		8
1964968C1	04-18		10
196548C1	08-02		17
1968039C3	06-45		26
	06-45		31
	09-11		10
	09-12		23
1968058C1	04-24		16
1968108C2	09-10		42
1968288C1	05-18		33
1968289C1	05-18		32
1968291C1	05-18		45
	05-19		45
	05-20		45
1968292C1	05-18		46
	05-19		46
	05-20		46
1968293C1	05-18		
	05-19		
1968296C1	05-18		25
1968297C1	05-18		26
	06-20		43
196830A1	04-24		4
196831A1	04-24		11
1968334C1	06-36		8
1968339C4	06-36		7
1968489C1	06-36		1
197095A1	03-21		6
1971259C1	03-18		24
1971726C1	06-33		1
1974039C1	09-05		69
	09-56		28
	09-60		48
1974215C3	09-02		1
	09-05		36
1974525C2	03-16		11
1974656C1	09-40		22
	09-40		3
1975213C2	07-13		39
1975266C1	07-13		43
	07-14		51
1975290C1	07-13		38
1975499C1	06-37		11
1975500C1	06-37		3
1975782C1	04-12		3
	04-21		12
	04-25		9
	09-10		12
	09-27		32
197595A3	06-24		28
1977334C1	09-41		9
	09-42		9
1977448C2	05-01		8
1977929C1	06-45		36
1978738C1	09-52		6
1981187C1	07-06		12
1981207C1	06-08		50
	06-09		50
1981236C1	05-21		
1981270C1	06-36		9
	06-37		9
1981327C1	06-34		12
	06-35		12
1981852C3	09-30		7
1982103C1	09-46		11
	09-47		11
198336A1	07-10		32
1983391C1	04-08		7

Number	Figure	Sequence	Ref.
1983391C1	09-24		49
1983394C2	04-10		16
198496A1	06-39		1
	06-40		1
198501A1	07-10		52
198502A1	07-10		41
198519A3	06-23		74
198575A1	02-01		35
198684A1	07-10		47
198685A1	07-10		49
198709A1	06-41		15
	06-43		15
1987186C2	09-30		8
1987397C2	04-10		5
198834A2	03-16		37
198853A1	07-10		20
198913A3	09-20		13
	09-20		9
198916A2	09-19		6
	09-20		5
1990753C1	06-30		2
	07-01		11
	07-01		2
1990758C2	09-39		11
199320A1	06-23		1
	07-10		2
1994615C2	06-06		2
1997369C1	06-22		41
1997421C1	06-22		15
1997422C1	06-22		50
	07-06		8
1997446C2	06-18		1
	06-19		1
1997853C1	05-18		9
1997879C1	06-23		13
1997880C1	06-23		19
	06-23		19
1997881C1	06-23		30
	07-10		10
1997885C1	06-23		22
1997886C1	06-34		7
1997888C1	06-12		9
	06-18		9
1997891C1	06-23		23
	07-10		18
1997893C1	06-23		25
	07-10		16
1997894C1	06-23		25
	07-10		16
1997895C1	06-23		25
	07-10		16
1997907C1	06-23		10
	06-23		10
	06-39		46
	06-40		46
199922A2	06-24		13
199923A1	06-24		17
	06-39		41
199927A1	06-24		22
	06-39		40
199928A1	06-24		22
	06-39		40
199929A1	06-24		22
	06-39		40
1999381C1	07-01		6
1999382C1	06-30		3
	07-01		12
1999650C1	09-19		36
199981A1	06-24		20
201-101	07-04		37
	07-13		12
	07-14		10
201-102	05-06		40
	06-23		35
	07-13		9
	07-14		7
201-106	07-13		55
	07-14		31
201-139	08-10		6
201-304	07-02		22
	07-03		22
	07-04		22
	07-04		34
	07-15		18
201-319	07-15		42
201-322	07-13		35
	07-14		29
201-329	07-14		56
201-342	02-03		37
201-401	06-03		8
	06-04		8
	06-05		8
201-434	07-13		25
	07-14		17
205369R91	06-03		11
	06-04		11
	06-05		11
	06-24		30
211-1009	06-06		11
	06-07		5
	06-17		33
211-1012	06-10		5
	06-11		5
211-1311	04-20		21
214-1307	02-03		29
214-1308	02-03		35
	03-20		49
214-1310	02-32		7
	02-33		7
214-1314	02-27		25
	02-32		7A
	02-33		7A
214-1315	02-32		6
	02-32		9
	02-33		6
	02-33		9
214-1318	02-32		6
	02-33		6
214-1404	02-22		15
214-1408	03-21		7
	03-22		7
	03-24		7
214-1412	07-15		29
214-1416	02-03		32
214-1424	02-04		14
	02-05		21
214-1448	08-03		8
214-1512	02-17		15
	02-18		15
214-1516	03-20		46
214-1536	07-16		31
	07-17		31
214-1544	09-44		14
	09-44		14
	09-44		29
	09-44		29
214-1704	03-03		16
	03-03		28
214-1706	03-21		12
214-31160	02-05		11
214-32112	02-05		23
214-32128	02-05		15
214-3248	02-03		7
	03-20		45
214-3280	02-04		12
	02-04		24
	02-05		28
	07-15		41
214-3296	02-04		9
	02-05		13
217-1014	02-26		12
	02-27		12
217-103	02-01		23
	02-36		9
	02-37		9
	03-20		12
217-1079	02-04		18
	02-05		25
217-120	06-33		11
217-125	03-20		14
217-130	02-03		25
217-132	02-01		2
217-134	09-40		2
217-15	06-33		10
217-154	02-03		28
217-180	02-01		22
217-281	03-03		27
217-290	03-20		13
217-293	03-20		14
217-348	03-22		11

Number	Figure	Sequence	Ref.
217-348	03-24		11
217-40	02-07		5
217-402	02-06		25
217-405	02-01		3
217-426	02-29		8
217-432	02-29		9
	03-03		2
	08-15		3
	08-27		14
217-438	02-15		8
	02-29		10
	02-36		31
	02-37		31
217-441	02-23		4
	02-24		4
	02-31		2
	02-36		30
	02-37		30
217-443	02-36		10
	02-37		10
217-45	09-40		1
218-1280	08-16		27
218-5103	06-03		54
	06-04		54
	06-05		54
218-5105	06-19		43
218-5156	06-03		60
	06-04		60
	06-05		60
	06-23		81
218-5157	08-04		7
	08-05		7
218-5205	08-20		40
218-5206	08-21		2
218-5210	08-20		7
	08-21		4
218-5211	08-20		35
218-5351	06-03		44
	06-04		44
	06-05		44
	06-23		79
	07-10		4
219-1	05-10		15
	05-11		15
	05-12		15
	05-13		15
	05-14		15
	05-15		15
	05-23		23
	05-24		23
219-6	05-10		24
	05-10		29
	05-11		24
	05-11		29
	05-12		24
	05-12		29
	05-13		24
	05-13		29
	05-14		24
	05-14		29
	05-15		24
	05-15		29
219-92	05-08		2
219530H1	06-12		44
220-502	06-33		5
220056A1	07-05		18
220057A1	06-20		13
220064A1	05-03		39
	05-04		39
	05-23		16
	05-24		16
	06-32		28
220199A1	06-38		5
220415A2	04-30		15
	09-08		39
220416A2	04-30		16
	09-08		40
220560A1	06-38		30
220598A3	09-48		23
220599A2	09-48		24
220600A2	09-48		25
220851A1	02-06		21
220935A3	09-20		8
221-1034	02-23		20
	02-24		20

Number	Figure	Sequence	Ref.
221-1092	09-40		21
	09-40		4
221-887	05-10		2
	05-11		2
	05-12		2
	05-13		2
	05-14		2
	05-15		2
	05-21		34
	05-22		34
221203A1	06-39		16
221209A1	06-39		49
221240A4	06-02		10
221429A2	09-15		5
	09-19		3
221527A1	08-04		78
	08-19		30
221576A1	06-17		20
	06-17		28
	06-26		2
	06-27		2
	06-28		2
	06-29		2
	07-09		27
	07-10		26
	08-04		80
	08-05		80
	08-16		6
	08-17		20
	08-19		11
221578A1	05-06		66
	06-17		2
	07-09		11
	07-13		33
	07-14		67
	08-14		38
	08-15		18
	08-15		4
	08-17		16
	08-19		16
	08-27		12
221579A1	06-06		3
	08-19		20
	08-21		32
	08-27		3
221580A1	06-17		4
	08-15		16
	08-16		4
	08-17		18
	08-19		18
221654A1	09-08		38
221943A1	06-24		37
222-21	03-03		6
222-993	02-48		1
	02-49		1
222000A1	06-24		36
222001A1	06-24		36
222002A1	06-24		36
222136A1	04-28		23
	04-31		6
222292A1	09-35		17
222354A1	09-48		21
222355A1	09-48		3
222674A1	06-24		36
222675A1	06-24		22
	06-39		40
222732A1	06-24		23
222787A2	09-20		4
222848A1	04-28		24
	04-31		7
222856A1	06-23		5
	07-10		14
223420A1	06-02		60
223433A1	04-14		31
223971A1	08-04		68
	08-05		68
	08-19		22
224234A2	07-15		12
224236A1	07-15		7
224360A1	07-18		3
224818A3	05-01		5
224870A1	06-21		25
224900A1	03-16		16
	03-18		22
225-14210	03-16		13

Number	Figure	Sequence	Ref.
225-14210	09-43		24
225162C1	04-12		13
225164C1	04-12		12
225171A6	06-02		1
225199A1	06-08		1
225200A1	06-09		1
225315C1	04-31		26
	08-21		9
225318C1	04-31		27
	08-21		8
225643A1	09-54		5
225672A2	06-45		16
225800A2	06-39		4
225801A1	06-39		47
225802A1	06-39		7
225805A1	06-39		35
225806A1	06-41		1
	06-43		1
225810A1	06-41		16
	06-43		16
	06-44		16
225812A1	06-43		20
225820A1	06-02		13
	06-43		30
	06-44		30
226024A3	06-41		33
226028A2	06-41		36
226029A1	06-41		37
226031A2	06-41		39
226033A3	06-41		23
226034A2	06-41		26
226035A1	06-41		22
226037A4	06-41		20
226042A2	06-42		2
226045A2	06-42		1
226188A3	06-02		47
226637A1	06-08		63
226686A3	05-08		4
226690A2	09-06		9
	09-07		9
226775A1	02-08		2
226851A1	06-24		24
226950A4	06-41		13
	06-43		13
227116A2	06-22		10
227117A2	06-22		11
227739A2	04-08		6
	04-12		11
	09-24		34
228256A1	06-43		31
228261A1	06-02		46
228265A1	06-02		46
228267A1	06-02		9
228270A1	06-02		9
228273A1	06-47		19
	06-47		8
228300A1	06-02		33
228303A1	06-02		33
228304A2	06-02		29
228305A1	05-26		
228439A1	07-15		4
228759A1	04-34		1
228760A1	04-34		1
229354A1	04-01		22
	04-02		22
229357A1	03-21		21
	03-23		17
229483A2	09-03		11
	09-03		16
	09-03		21
229593A1	06-22		29
229594A1	06-22		2
229904A2	09-54		8
230-4714	03-16		18
230009A4	09-20		
230042A1	06-09		58
230098A1	04-14		3
230135A2	06-12		1
	06-13		1
230166A1	06-39		23
230486A1	06-02		16
230487A1	06-02		16
230488A1	06-02		16
230490A1	06-02		16
230497A1	06-02		17
230760A2	06-02		50
231-5145	04-21		8
231023A1	05-21		5
231241A1	06-39		2
231242A7	03-20		4
231410A1	03-19		19
231426A1	03-19		18
231532A1	07-18		7
231760A1	06-41		10
	06-43		12
231772A1	06-41		9
	06-43		11
231773A1	06-41		8
	06-43		10
231777A1	06-43		10
231778A1	06-41		8
	06-43		10
231935A2	06-23		20
231936A2	06-23		20
231997A1	05-26		
231998A1	05-25		1
	05-26		1
231999A1	05-26		3
	05-26		3
	05-26		3
232-46314	05-18		39
	05-19		39
	05-20		39
232448A2	04-25		1
232449A2	04-25		2
232450A2	04-25		1
232451A2	04-25		2
232454A2	04-25		15
232455A2	04-25		20
232617A1	09-46		17
	09-47		17
232869A5	04-14		35
232968A1	09-46		7
	09-47		7
233105A1	04-24		17
234157A5	06-03		18
234783A8	06-29		
234802A2	06-06		4
235519A1	06-24		18
235532A3	06-27		
	06-28		
235545A1	06-41		7
	06-43		6
235628A1	05-10		4
	05-11		4
	05-12		4
	05-13		4
	05-14		4
	05-15		4
235676A1	03-16		51
	03-17		31
	04-14		51
235851A2	06-19		33
235913A2	06-19		23
235913A3	06-19		23
235976A2	06-03		15
	06-04		15
	06-05		15
	06-14		30
	06-15		30
	06-16		30
235977A2	06-03		16
	06-03		30
	06-04		16
	06-04		30
	06-05		16
	06-05		30
235987A1	06-19		24
235992A1	09-22		1
236323A1	07-01		24
236504A2	07-01		19
236602A1	06-32		35
236897A2	09-54		7
236998A1	09-12		41
237-6002	08-20		41
237-6003	07-05		7
	08-21		3
237-6004	06-03		55
	06-04		55
	06-05		55

Number	Figure	Sequence	Ref.
237-6004	07-14		59
	08-21		28
237-6005	02-45		11
	08-19		15
237-6006	06-03		10
	06-03		45
	06-04		10
	06-04		45
	06-05		10
	06-05		45
	06-19		44
	06-23		80
	07-02		23
	07-03		23
	07-04		23
	07-04		35
	07-04		38
	07-10		5
	07-13		13
	07-13		36
	07-14		11
	07-14		30
	07-15		19
	08-03		36
	08-04		16
	08-05		16
237-6008	05-06		41
	06-02		56
	06-03		42
	06-03		52
	06-03		61
	06-04		42
	06-04		52
	06-04		61
	06-05		42
	06-05		52
	06-05		61
	06-17		11
	06-23		36
	06-23		82
	07-09		26
	07-09		3
	07-13		10
	07-13		56
	07-14		32
	07-14		8
	08-07		14
	08-07		20
	08-07		9
	08-08		14
	08-08		42
	08-17		2
	08-21		5
237-6010	06-27		15
	06-28		11
	06-29		9
	08-04		8
	08-05		8
	08-10		7
	08-11		22
	08-20		26
	08-20		36
	08-20		8
	08-21		19
	08-21		39
237-6012	07-13		26
	08-16		17
	08-16		2
	08-16		26
	08-19		10
	08-27		15
237-8008	02-47		18
	03-05		18
	03-05		2
	03-06		12
237-8010	02-47		19
	03-05		25
	03-05		4
	03-05		8
	03-06		18
	03-06		20
237-8012	02-47		27
	03-06		16
	03-10		10
237275A1	09-15		4
237399A5	03-20		40
237443A1	08-24		18
	08-25		18
	08-26		18
	09-50		14
237486A1	03-16		7
	03-17		8
237582A1	04-01		2
	04-02		2
237995A1	07-08		13
238-5011	08-20		55
238-5012	06-06		10
	06-07		4
	06-17		32
	08-20		56
238-5013	02-31		9
	02-47		20
	02-49		2
	06-17		13
	06-23		34
	06-39		32
	06-40		32
	07-06		26
	07-09		4
	08-17		15
	08-17		3
238-5014	06-03		17
	06-03		31
	06-04		17
	06-04		31
	06-05		17
	06-05		31
	06-14		32
	06-15		32
	06-16		32
	06-17		12
	06-27		17
	06-28		13
	07-09		5
	07-10		23
	08-17		14
	08-17		4
	08-21		20
238-5015	06-27		16
	06-28		12
	06-29		10
238-5019	06-03		33
	06-04		33
	06-05		33
	06-14		34
	06-15		34
	06-16		34
238-5022	08-21		37
238-5023	08-21		38
238-5027	08-23		12
238-5043	06-24		32
238-5111	02-31		8
	02-44		15
	02-47		21
	06-32		41
238-5112	07-08		15
	08-12		3
238-5114	07-10		33
238-5115	02-44		13
	02-48		2
	06-14		44
	06-15		44
	06-16		44
	06-22		58
	06-32		40
	06-41		62
	07-08		16
	08-12		2
	08-13		2
238-5119	07-13		16
	07-14		38
238-5120	02-48		3
	08-20		37
238-5123	02-37		23A
238-5140	06-02		32
238-5142	08-21		30
238-5155	06-37		10
238-5157	06-02		48
238-5161	06-02		11
238-5208	06-06		7

Number	Figure	Sequence	Ref.
238-5210	03-20		7
238-5212	02-09		13
	02-46		12
	05-23		4
	05-24		4
238-5214	03-20		10
238-5220	06-24		35
238-5222	06-02		72
238-5223	06-12		47
	06-13		2
	06-38		31
238-5225	06-02		15
	08-04		13
238-5227	02-31		15
238-5228	08-05		13
238-5235	08-03		10
238-5237	08-24		5
238-5239	08-25		5
238-5241	06-36		10
	08-26		5
238-5244	02-11		3
	02-12		3
	02-46		5
	02-47		22
238-5257	06-38		21
238-5345	08-03		3
	08-04		3
	08-05		3
238-6008	08-17		13
	08-21		27
238-6011	05-06		65
	07-14		57
	07-14		89
	07-15		11
	07-15		34
	08-21		25
238-6012	05-03		38
	05-03		4
	05-03		7
	05-04		38
	05-04		7
	05-05		4
	05-05		7
	05-06		19
	05-06		25
	06-03		41
	06-03		9
	06-04		41
	06-04		9
	06-05		41
	06-05		9
	07-02		10
	07-02		24
	07-02		29
	07-02		4
	07-02		6
	07-03		10
	07-03		24
	07-03		31
	07-03		33
	07-03		38
	07-03		6
	07-04		10
	07-04		24
	07-04		31
	07-04		36
	07-04		39
	07-04		42
	07-04		6
	07-05		15
	07-13		14
	07-13		57
	07-14		12
	07-14		18
	07-14		33
	07-14		84
	07-15		20
	07-15		43
	07-15		8
	08-04		60
	08-04		67
	08-04		70
	08-05		60
	08-05		67
	08-05		70
238-6012	08-06		31
	08-07		17
	08-07		21
	08-07		6
	08-08		39
	08-09		30
	08-09		32
	08-09		36
	08-10		4
	08-10		8
	08-14		19
	08-16		12
	08-16		3
	08-19		24
	08-19		5
238-6013	07-09		25
238-6014	05-03		13
	05-03		16
	05-03		18
	05-03		23
	05-03		28
	05-03		34
	05-04		18
	05-04		23
	05-04		28
	05-04		34
	05-05		4
	05-06		30
	05-06		37
	05-06		42
	05-06		54
	05-06		58
	06-02		57
	06-03		51
	06-03		66
	06-04		51
	06-04		66
	06-05		51
	06-05		66
	06-23		37
	06-23		41
	07-02		10
	07-02		19
	07-02		24
	07-02		28
	07-02		29
	07-03		10
	07-03		19
	07-03		24
	07-03		28
	07-03		38
	07-03		4
	07-04		10
	07-04		19
	07-04		24
	07-04		28
	07-04		4
	07-04		42
	07-08		12
	07-08		22
	07-08		26
	07-08		4
	07-08		8
	07-09		24
	07-13		11
	07-13		19
	07-13		41
	07-13		61
	07-14		39
	07-14		54
	07-14		63
	07-14		72
	07-14		9
	08-04		39
	08-04		64
	08-05		39
	08-05		64
	08-06		13
	08-06		16
	08-06		20
	08-06		24
	08-06		28
	08-06		3
	08-06		34
	08-07		10

Number	Figure	Sequence	Ref.
238-6014	08-07		13
	08-07		2
	08-08		27
	08-08		31
	08-08		35
	08-08		43
	08-09		17
	08-09		4
	08-11		13
	08-11		18
	08-11		7
	08-22		16
238-6015	08-16		21
	08-20		20
	08-27		10
238-6016	05-06		46
	05-06		50
	07-14		85
	07-15		13
	07-15		40
	08-03		50
	08-06		6
	08-08		11
	08-08		15
	08-08		16
	08-08		19
	08-08		22
	08-08		46
	08-09		12
	08-09		41
	08-09		44
	08-09		8
	08-11		2
	08-13		16
	08-18		15
	08-20		15
	08-23		4
238-6018	05-06		13
	05-06		69
	05-06		8
	07-13		66
	07-14		79
	08-01		10
	08-01		15
	08-01		17
	08-01		28
	08-01		33
	08-01		35
	08-01		8
	08-02		22
	08-02		4
	08-03		22
	08-03		31
	08-03		44
	08-04		83
	08-05		83
	08-08		55
	08-11		25
	08-14		14
	08-14		30
	08-15		14
	08-16		15
	08-19		8
	08-27		16
238-6021	08-03		26
	08-04		23
	08-04		55
	08-04		86
	08-05		23
	08-05		55
	08-05		86
	08-08		10
	08-08		5
	08-22		17
238-6025	03-17		10
	08-04		26
	08-04		28
	08-04		32
	08-05		26
	08-05		28
	08-05		32
	08-19		27
238-6111	06-32		11
238-6112	06-14		8
	06-15		8
238-6112	06-16		8
	06-32		12
	08-03		51
	08-18		2
	08-21		29
238-6116	08-18		4
	08-20		63
238-6117	08-18		3
	08-21		31
238-6124	06-39		3
238-6139	06-32		26
238-6219	08-04		17
	08-05		17
238-7015	06-26		7
	06-27		11
	06-27		7
	06-28		7
	06-29		16
238-7016	06-17		9
	06-26		6
	06-27		10
	06-27		6
	06-28		6
	06-29		15
	08-17		11
238-7018	02-17		12
	02-18		12
	02-48		24
	02-49		3
	06-17		10
	08-17		12
238-7037	06-23		14
238-7115	02-48		4
	06-29		12
238-7131	07-05		9
238-7169	07-10		46
238-7175	07-10		48
238-7210	02-45		12
	02-49		4
	03-15		2
238-8011	08-04		6
	08-05		6
238016A2	04-22		6
238290A4	04-14		35
238495A3	09-46		4
	09-47		4
239-5112	06-32		42
239127A3	04-22		10
239491A1	03-16		23
	03-17		7
239552A2	06-17		
	08-17		
239718A2	06-39		44
240557A1	04-22		11
240677A1	05-25		3
	05-25		3
	05-25		3
	05-25		3
	05-25		3
240686A1	05-25		4
	05-25		4
	05-25		4
	05-25		4
	05-25		4
	05-25		4
	05-25		4
	05-25		4
	05-25		4
	05-26		4
	05-26		4
	05-26		4
	05-26		4
	05-26		4
	05-26		4
	05-26		4
	05-26		4
	05-26		4
240748A2	09-43		5
240969A1	08-22		10
240970A2	08-22		12
240971A2	08-22		11
240973A2	08-22		14
240974A2	08-22		13

Number	Figure	Sequence	Ref.
241380A1	06-41		58
241381A1	06-41		58
241382A1	06-41		58
241383A1	06-41		58
241384A3	06-41		55
241387A5	06-42		4
241791A3	09-12		13
241889A3	09-48		26
242065A1	02-01		20
242070A1	02-03		34
242323A4	09-39		36
242489A3	09-53		6
242491A5	06-20		25
242492A5	06-08		12
	06-09		12
	06-11		26
	06-12		24
242536A5	09-21		2
242537A5	09-21		1
242539A4	09-21		3
242543A5	09-53		10
242556A1	02-08		8
242667A4	09-20		1
243091A1	06-19		10
243254A1	08-21		
243256A1	08-21		
243544A1	06-41		49
243675A1	02-07		7
243779A4	03-20		20
243946A4	06-43		21
243949A4	06-43		26
243952A4	06-43		26
244030A3	09-07		2
244031A3	09-07		2
244106A1	04-32		4
244759A2	09-06		2
244760A2	09-06		2
245301A1	09-49		10
245918C1	04-12		10
	09-27		23
246157A1	04-22		3
246841A2	09-39		6
247991A1	02-09		3
248-1243	09-41		31
	09-42		31
248-2164	07-11		2
	07-12		2
248-2181	06-02		74
248-2381	09-41		11
	09-42		11
248087A1	04-14		26
248408A2	06-01		1
248409A2	06-01		1
248802A2	09-12		7
248913A2	03-18		11
	03-19		13
249528A1	06-24		22
	06-39		40
249529A1	06-41		8
	06-43		10
249530A1	06-41		58
249532A4	06-43		26
249541A1	09-01		3
249776A1	06-40		40
249777A1	06-40		40
249778A1	06-40		40
249779A1	06-40		40
249780A1	06-40		40
249806A1	09-64		4
249817A2	05-03		35
	05-04		35
250718A3	02-09		9
250838A2	03-06		24
250939A1	06-31		5
250965A1	09-39		12
251189A1	05-18		29
	05-19		29
	05-20		29
251190A1	05-21		16
251386A1	09-48		22
251649A2	09-12		34
251788A3	09-46		1
	09-47		1
	09-52		1
251858A1	09-10		20

Number	Figure	Sequence	Ref.
251941A1	06-21		6
251942A1	06-21		8
251944A2	02-08		11
251991A1	02-09		11
252114A3	09-12		33
252244A2	09-43		20
252293A2	09-12		20
252367A5	09-10		18
252462A2	06-29		8
252550A2	09-20		23
252636A1	09-10		25
252701A4	02-09		7
253132A1	06-21		7
253212A1	05-21		35
	05-22		35
	05-27		3
	05-27		3
253385A2	06-14		35
	06-15		35
	06-16		35
	06-17		36
253456A1	06-41		
	06-43		
253458A1	06-39		
253459A4	06-43		
253460A1	06-41		
253485A1	06-20		18
253486A1	06-20		19
253636A1	09-01		2
253660A2	08-22		15
253698A3	09-17		8
253805A1	06-03		34
253850A1	09-06		15
	09-07		15
254031A4	09-12		10
254105A1	06-39		29
254325A3	09-25		4
254337A2	06-18		47
	06-19		2
254574A2	06-08		44
	06-09		44
254711A1	09-20		26
254772A3	09-19		42
	09-20		14
254851A1	08-04		30
	08-05		30
	08-19		25
255028A3	03-20		3
255029A4	03-20		4
255077A1	06-30		7
255094A1	03-20		43
255095A1	03-20		41
255129A4	09-08		1
255130A3	09-08		1
255218A4	09-43		7
255219A2	09-43		19
255220A2	09-43		25
255236A3	09-43		1
255237A2	09-43		2
255238A4	09-13		1
255270A4	02-08		1
255291A1	03-18		5
	03-19		7
255295A3	09-43		28
255404A3	07-10		28
255645A1	02-01		38
	02-06		3
255646A1	02-01		37
	02-06		2
255647A5	02-01		25
255675A1	04-22		2
255682A2	02-03		4
255683A2	02-03		6
255685A1	09-06		15
	09-07		15
255728A1	04-22		4
255803A2	09-50		24
255821A2	04-22		21
256019A1	02-02		3
256235A2	06-09		55
256303A1	04-14		28
256304A2	04-14		24
256305A2	04-14		21
	04-14		9
256331A2	09-44		12

Number	Figure	Sequence	Ref.
256331A2	09-44		12
256402A1	04-28		4
	09-36		7
256544A1	06-14		31
	06-15		31
	06-16		31
256633A1	06-29		11
256719A3	02-01		24
256776A1	03-18		6
	03-19		8
256809A1	09-20		3
256810A1	09-20		2
256833A1	06-30		12
256955A2	06-03		43
	06-04		43
	06-05		43
257098A1	09-44		5
257099A2	06-20		44
257176A3	04-21		9
257349A1	03-20		5
257374A1	09-17		2
257375A1	09-17		3
	09-18		4
257466A2	09-10		7
257481A2	08-11		1
257560A4	09-06		6
	09-07		6
257581A1	09-10		9
258010A2	03-16		50
	03-17		30
	04-14		50
258154A3	06-23		38
258242A1	06-30		11
	07-01		30
258248A2	09-11		5
258255A1	05-26		1
258342A2	04-33		2
258343A2	04-33		3
258452C1	06-08		42
	06-09		42
258469A1	06-02		34
258470A2	06-08		55
258504A1	04-26		4
	09-01		13
	09-03		2
	09-03		5
	09-05		3
258531A1	06-42		6
258608A4	09-11		2
258610A4	09-11		1
258671A2	08-22		18
258734A2	03-16		27
	03-17		16
258820A1	04-19		6
	04-20		38
258840A1	04-20		3
258841A1	04-20		9
258853A2	06-24		1
258854A2	06-24		2
258855A1	06-24		4
258865A4	09-16		1
258866A4	09-16		3
258869A1	04-20		12
258871A1	04-20		11
258874A1	04-20		13
258877A1	04-20		16
258880A1	04-20		20
258883A1	04-20		39
258884A1	04-20		1
258885A1	04-20		2
258886A1	04-20		
258942A1	03-20		26
258960A1	08-24		8
	08-25		8
	08-26		8
259012A1	03-17		9
259040A1	03-16		28
	03-17		17
259075A3	06-01		4
259076A2	06-01		5
259188A1	06-01		9
	06-02		14
259288A1	09-43		15
259339A3	09-43		10
259366A1	05-25		
259367A2	05-25		
259368A1	05-25		
259369A1	05-25		
259370A1	05-25		
259371A1	05-26		
259372A1	05-25		
259373A1	05-25		3
	05-25		3
259416A1	05-25		1
	05-26		1
259713A1	04-25		4
25974R1	08-24		14
	08-25		14
	08-26		14
259979A2	06-02		52
260-16516	04-12		6
	09-26		54
	09-27		17
260-54312	04-31		1
	04-31		11
	04-31		21
260-5448	09-11		11
	09-12		24
261-14512	04-16		21
275054A2	09-46		10
275055A3	09-46		15
	09-47		15
275056A3	09-46		16
275108A5	06-45		11
275182A2	08-22		1
	08-23		
275213A1	06-02		46
275214A1	06-02		9
275215A1	06-02		33
275216A2	06-02		
275217A2	06-02		
275219A2	06-02		
275257A4	06-45		12
275258A4	06-45		13
275344A6	09-19		38
275345A4	09-19		40
275352A2	09-19		5
275353A1	09-19		32
275359A3	09-19		24
275444A1	09-19		58
275531A1	06-14		25
	06-15		25
	06-16		25
275602A1	09-41		55
	09-42		62
275798A1	03-20		15
275799A2	03-20		44
275800A1	03-20		42
275801A1	03-20		48
276-2446	08-24		17
	08-25		17
	08-26		17
276352A1	03-17		14
276426A1	04-28		13
276498A1	04-31		13
276638A1	06-02		16
276639A1	06-02		
276797A1	04-14		7
277059A1	05-01		16
277204A2	09-34		2
	09-35		2
277303A5	09-12		26
277311A1	08-04		14
	08-05		14
277389A2	06-41		3
	06-43		3
277570A1	09-35		38
277576A1	09-35		33
277582A1	09-35		30
277610A1	06-21		26
278277A3	08-25		
	09-48		10
278285A2	08-25		10
278316A2	04-15		2
	04-16		2
	09-23		4
	09-26		12
278331A1	08-25		13
278419A3	08-26		
	09-48		10

Number	Figure	Sequence	Ref.
278426A2	08-26		10
278432A1	02-01		8
278506A2	08-20		49
278550A2	08-20		
278816A3	03-16		8
279225A1	04-30		2
279226A1	04-30		1
279227A1	04-29		3
279228A1	04-29		2
279265A2	07-01		20
279266A1	07-05		6
279267A1	04-02		20
279640A1	06-02		70
279763A2	07-11		9
	07-12		9
279765A3	07-11		4
	07-12		4
279916A1	04-30		5
280-1448	09-42		61
280-5348	06-45		27
	06-45		32
280448A1	04-28		14
280510A2	09-43		29
280584A3	04-08		3
280627A1	04-15		19
	04-16		19
	09-22		20
280628A1	04-15		20
	04-16		20
	09-26		35
280951A2	09-43		3
281-14512	09-41		38
	09-42		38
281-3446	04-14		6
281084A2	09-44		8
281095A4	09-44		4
281158A1	09-10		40
281159A1	09-10		41
281408A1	08-26		6
281412A1	08-26		13
281456A1	08-11		15
281696A1	06-18		44
281848A1	09-25		6
281914A1	05-10		39
	05-11		39
	05-12		39
	05-13		39
	05-14		39
	05-15		39
281937A1	05-12		10
	05-12		6
	05-15		10
	05-15		6
281939A1	05-12		9
	05-15		9
281982A3	05-22		19
281984A1	05-21		
281985A1	05-22		
281986A1	05-22		16
282109A1	02-04		20
282188A1	05-27		1
282189A1	05-27		1
282275A1	08-08		36
282278A1	08-07		7
	08-08		40
282365A1	08-07		3
282456A1	07-11		7
	07-12		7
282622A2	09-08		30
282623A2	09-08		30
282624A1	07-11		5
	07-12		5
282625A1	07-11		3
282708A1	03-20		9
282709A1	03-20		11
282724A1	06-02		41
	06-09		60
282726A1	06-02		41
	06-08		60
283035A1	03-20		15
283118A2	09-64		5
283120A1	05-27		2
	05-27		2
283264A1	03-04		23
283465A1	07-11		1
283642A4	08-17		
283659A1	09-53		1
284151A1	06-02		43
	06-08		62
	06-09		62
284272A3	09-41		45
	09-42		45
284273A2	04-01		26
	04-02		24
	09-39		33
284297A1	07-07		5
284327A1	08-22		24
284328A1	08-22		25
284329A1	08-22		26
284330A1	08-22		27
284331A1	08-22		28
284357A2	07-07		1
284427A1	02-04		15
284638A2	04-27		16
284654A1	09-18		1
284735A2	03-22		1
	03-24		1
284736A2	03-21		18
284736A3	03-22		18
284742A1	04-12		17
284777A1	06-31		6
284935A1	07-10		51
287679C1	06-20		42
291207C1	02-03		31
291260A2	03-22		2
	03-24		2
291507A2	03-23		12
	03-24		16
291895A4	09-54		4
291903A3	02-04		
29214H	06-13		48
292457A2	03-23		11
	03-24		15
292560A2	05-12		3
	05-15		3
292564A2	05-12		3
	05-15		3
292565A1	05-10		37
	05-11		37
	05-12		37
292675A1	09-23		10
	09-23		14
293002A1	09-51		17
293053A1	06-41		60
293388A2	03-16		2
	03-17		2
293615A1	09-44		26
293678A2	05-24		
293789A5	09-52		3
	09-55		32
	09-56		63
	09-57		10
	09-60		67
	09-61		44
293792A5	09-52		2
	09-55		31
	09-56		62
	09-57		9
	09-60		66
	09-61		43
294107A2	05-23		
294291A1	02-04		2
294292A1	02-04		3
294293A1	02-04		4
294295A1	09-35		40
294296A1	09-35		20
294603A1	08-14		6
295012A2	06-30		16
295013A2	06-30		13
295066A1	06-41		46
295087A1	06-02		71
295149A1	06-03		68
	06-04		68
	06-05		68
295162A2	05-10		3
	05-11		3
	05-13		3
	05-14		3
295163A2	05-10		3
	05-11		3

Number	Figure	Sequence	Ref.
295163A2	05-13		3
	05-14		3
295165A1	05-21		1
295168A1	05-22		1
295191A3	05-01		13
295192A1	05-01		15
295316A1	06-03		69
	06-04		69
	06-05		69
295322A2	09-08		8
295323A2	09-08		8
295340A1	03-20		22
295478A1	05-01		28
295564A1	05-24		7
295565A1	05-23		7
295830A4	03-18		18
295920A1	07-09		13
296030A1	09-64		1
296033A1	09-64		2
296042A1	09-64		6
296268A1	07-10		57
296292A1	02-01		40
296294A1	02-01		41
296295A1	02-01		42
296316A3	09-33		2
296775A2	05-01		19
297008A4	09-25		5
297017A1	09-22		8
297021A1	09-22		18
297024A2	09-22		5
297025A2	09-22		5
297026A2	09-22		15
297027A2	09-22		15
297134A1	06-20		22
297333A2	05-10		45
	05-11		45
	05-12		45
297354A1	05-25		
297355A1	05-25		1
	05-26		1
297356A1	05-25		3
	05-25		3
	05-25		3
297362A1	02-04		23
	02-05		27
297418A2	06-20		37
297465A1	05-26		
297466A1	05-26		3
	05-26		3
	05-26		3
297495A1	05-22		5
297527A1	02-09		1
297622A2	08-07		18
297750A1	09-03		25
297750A2	09-04		11
297767A1	04-35		3
297853A2	03-18		4
	03-19		6
297873A3	04-35		1
297957A2	09-12		15
297958A2	09-10		33
297980A1	09-25		9
298253A1	04-20		33
298254A1	04-20		2C
298291A1	08-14		9
	08-15		9
298464A1	09-16		5
298465A2	09-16		2
298571A2	09-25		7
298614A1	07-09		7
	08-17		6
298715A1	07-01		13
	07-01		7
299135A2	09-55		
299160A1	08-07		11
299201A2	02-08		13
299407A1	04-29		21
299432A1	09-13		17
300084A1	06-41		24
300182A2	04-28		1
300183A2	04-28		2
300188A1	04-28		9
300385A1	09-53		5
300432A2	09-16		4
300655A1	04-12		14

Number	Figure	Sequence	Ref.
300827A1	06-03		32
	06-04		32
	06-05		32
300828A1	06-14		33
	06-15		33
	06-16		33
300903A2	08-01		6
300904A2	08-01		5
301020A2	08-01		12
301152A3	09-36		1
301180A3	09-44		25
301200A1	05-01		6
301222A1	09-10		36
301248A2	09-51		10
301271A1	06-30		9
301430A2	08-01		13
301436A	09-06		
301437A	09-07		
301523A3	04-24		
301533R1	06-14		24
	06-15		24
	06-16		24
301720A2	09-08		16
301790A3	03-20		35
301803R1	09-40		20
	09-40		5
301842A2	06-01		4
301843A1	06-01		9
	06-02		14
301844A2	06-01		5
301891A2	04-28		19
	04-31		
301901A1	09-26		4
301927A1	09-51		11
301969A2	08-20		42
301970A1	08-20		43
302001A1	09-30		10
302004A2	09-30		9
302005A1	09-30		3
302011A1	09-30		14
302016A1	09-30		24
302027A1	09-31		6
302029A2	09-31		8
	09-32		8
302033A1	09-31		5
	09-32		5
302092A5	09-35		
302118A1	04-15		15
	09-26		16
302170A2	06-17		
302172A1	05-22		
302173A1	05-21		
302174A1	05-22		
302180A1	05-22		
302184A1	05-21		28
	05-22		28
302196A1	05-22		26
302197A1	05-21		26
302198A2	05-21		19
302251A2	05-21		
302275A2	06-30		8
302342A1	09-08		18
302364A2	09-08		15
302366A2	09-08		15
302404A1	09-08		31
302405A1	09-08		32
302435A1	09-64		9
302437A1	09-64		10
302456A1	09-26		17
302553A1	06-02		4
302554A1	06-02		25
302555A1	06-02		40
302643A1	05-10		20
	05-11		20
	05-13		20
	05-14		20
302645A1	05-10		26
	05-11		26
	05-13		26
	05-14		26
302647A1	05-10		32
	05-11		32
	05-13		32
	05-14		32
302648A1	05-10		25

Number	Figure	Sequence	Ref.
302648A1	05-11		25
	05-13		25
	05-14		25
302649A1	05-10		31
	05-11		31
	05-13		31
	05-14		31
302887A4	09-53		8
	09-54		11
302887A5	09-48		1
302896A2	09-12		44
302956A1	05-16		16
	05-17		16
302957A1	05-16		15
	05-17		15
302958A1	05-16		17
	05-17		17
303198A4	09-62		12
303401A1	06-47		12
	06-47		23
303433A1	04-08		15
	04-33		17
303465A2	06-31		9
303466A1	06-31		12
303520A2	09-10		44
303550A1	09-54		3
303595A2	04-28		10
303597A2	04-28		11
303732A1	09-44		13
	09-44		13
303754A1	06-30		5
303867A1	08-26		1
303867A2	06-31		13
303871A1	08-26		3
303872A1	08-25		1
303876A1	08-25		3
303880A1	08-24		2
	08-25		2
	08-26		2
304921A1	09-19		7
305002A2	08-24		
	09-48		10
305003A2	08-24		1
305008A1	08-24		3
305010A1	08-24		10
305020A2	09-53		2
305138A1	09-01		8
305158A1	09-19		8
305159A1	09-19		10
305688A1	09-21		10
	09-27		26
3057331R1	09-58		23
	09-59		23
305751A1	06-43		27
307087A2	06-03		1
307087A3	06-03		1
307130A1	04-24		3
307431A1	09-50		9
307475A1	03-19		29
307559A1	05-01		12
3076153R1	07-16		13
	07-17		13
3076154R1	07-16		12
	07-17		12
3079389R1	04-18		4
308000A1	05-03		6
308101A1	09-10		43
308172A1	08-06		17
308181A1	08-08		13
308245A1	06-17		
	08-17		
308247A1	05-03		5
308308A1	06-45		35
308492A1	04-28		5
308538A2	09-24		33
308633A1	09-19		4
308727A	09-18		
308904A1	04-08		4
	09-24		31
308905A1	09-24		32
308910A2	04-16		15
309721A4	09-05		22
310109A1	09-59		22
	09-59		55
310112A1	09-58		22
310130A1	09-58		
	09-59		
310135A1	09-58		32
	09-59		32
310139A1	09-58		
	09-59		
310147A1	09-58		
	09-59		
310175A1	09-58		
	09-59		
310181A1	09-58		
	09-59		
310184A1	09-58		55
310185A1	09-59		56
310186A1	09-58		56
310188A2	09-58		
310493A1	02-36		
	02-37		
310494A1	02-36		
	02-37		
310687A3	09-43		
310694A2	06-35		3
310695A1	06-35		1
310697A3	06-35		4
310728A2	06-35		6
310947A1	05-21		18
310960A1	05-10		
	05-11		
	05-13		
	05-14		
311042A1	05-22		8
311112A4	06-45		
311113A4	06-45		
311166A1	05-12		32
	05-15		32
311167A1	05-12		31
	05-15		31
311168A1	05-12		25
	05-15		25
311169A2	05-12		20
	05-15		20
311170A2	05-12		26
	05-15		26
311171A1	03-06		11
311184A1	03-05		3
311187A1	03-06		15
311670A1	06-03		53
	06-04		53
	06-05		53
311852A1	05-03		17
311858A1	09-62		13
	09-63		13
3125705R1	04-32		3
3131227R1	04-28		31
	04-30		6
3131463R91	07-13		4
	07-14		50
313244A1	02-36		34
	02-37		34
313246A1	02-36		35
	02-37		35
	02-47		24
313262A1	02-17		19
	02-18		19
	02-45		13
	02-49		5
313315A2	08-01		11
313490A1	04-04		18
313557A1	05-12		
	05-15		
313776A4	04-06		2
3138527R1	07-18		30
3138533R1	07-18		29
313940A1	08-16		1
313941A1	08-16		25
3141107R1	04-12		16
	04-12		18
314137A1	08-01		20
3141447R1	07-19		1
314326A5	09-57		1
314327A5	09-55		1
314328A5	09-57		1
314329A5	09-55		1
314450A2	05-23		3
	05-24		3

Number	Figure	Sequence	Ref.
314601A1	04-14		23
314606A1	09-19		34
314610A1	09-19		17
314611A1	09-19		31
314877A2	07-09		14
315181A4	09-62		11
315421A1	05-19		26
	05-20		26
315422A1	05-19		27
	05-20		27
315423A1	05-19		33
	05-20		33
315424A1	05-19		32
	05-20		32
315459A2	09-24		25
315514A1	07-09		23
315796A1	08-27		2
315832A1	03-20		16
315904A1	06-06		5
315911A1	02-03		5
315912A1	09-49		18
316000A2	03-16		1
	03-17		1
316078A2	03-20		50
316098A1	09-10		45
316328A1	05-22		
316330A2	05-21		
316443A2	07-03		17
	07-04		17
316518A3	09-19		
317008A3	09-38		1
	09-39		54
317647A1	05-23		21
	05-24		21
317688A1	04-33		15
317691A1	04-33		16
318504A1	05-18		
	05-19		
	05-20		
318616A2	02-08		6
318641A1	06-41		35
318845A1	05-18		34
	05-19		34
	05-20		34
318849A1	05-23		
318850A1	05-24		
318864A1	04-22		18
318934A1	05-02		3
319585A1	09-49		9
319721A1	08-20		50
319722A1	08-20		51
319723A1	08-20		52
319870A1	09-35		26
319913A4	09-34		6
319929A1	04-25		27
320787A1	03-16		35
320986A1	09-57		8
320986A2	09-55		34
321013A1	09-19		28
321023A3	09-19		30
321081A1	09-05		13
321277A1	09-19		56
321365A1	09-05		53
	09-48		41
	09-50		22
321367A3	09-05		52
	09-50		20
321516A1	05-20		
321535A1	09-19		57
321551A1	09-19		18
321552A1	09-19		21
321623A1	08-23		5
321689A1	08-20		61
322022A1	09-54		
322072A2	09-24		8
	09-26		37
322073A1	09-26		38
322108A1	03-19		22
322109A1	03-19		23
3223258R2	03-18		17
322332A1	04-25		21
322413A2	09-26		28
322529A1	07-08		27
	08-06		33
3226538R1	06-30		17
322839A1	09-41		39
	09-42		39
322840A1	09-41		43
	09-42		43
3229351R1	07-18		5
3229749R1	04-24		19
	04-24		7
322985A1	09-41		17
	09-42		17
322987A1	09-41		18
	09-42		18
322989A1	09-41		12
	09-42		12
322990A1	09-41		13
	09-42		13
322991A1	09-41		23
	09-42		23
322992A1	09-41		14
	09-42		14
322993A1	09-41		22
	09-42		22
322994A1	09-41		6
	09-42		6
322995A1	09-41		21
	09-42		21
322996A1	09-41		1
	09-42		1
323016A1	09-41		35
	09-42		35
	09-42		55
323066A1	06-41		45
323093A1	04-25		36
323094A1	04-30		7
3233348R1	07-18		8
	09-10		26
	09-19		54
3234063R1	09-10		27
	09-12		46
	09-19		13
	09-19		55
3234176R1	09-27		21
323597A1	04-35		10
323610A1	09-41		16
	09-42		16
323611A1	09-41		
323625A1	09-41		19
	09-42		19
323657A1	05-01		23
323734A1	06-39		10
324000A1	06-41		30
324022A1	09-41		49
	09-42		49
324023A1	09-41		50
	09-42		50
324053A1	09-13		23
	09-14		23
324437A1	09-22		19
	09-22		9
324439A1	09-22		10
324474A1	09-03		22
324475A1	09-03		17
324484A1	09-41		24
	09-42		24
324847A2	04-12		19
325061A2	04-33		1
325064A1	06-31		1
325065A1	06-31		2
325066A2	06-31		11
325068A1	06-31		14
325137A1	07-18		39
325362A1	06-31		3
325363A1	06-31		4
325533A1	06-31		10
325666A1	06-39		43
326281A1	04-16		12
326282A1	04-15		13
	04-16		13
326380A1	03-06		19
326665A1	09-44		2
326731A1	06-41		41
326733A1	06-41		34
326827A1	09-54		12
326965A1	07-02		20
	07-03		20
	07-04		20

Number	Figure	Sequence	Ref.
326965A1	08-19		13
327080A1	06-14		5
	06-15		5
	06-16		5
327172A1	06-41		48
327306A1	09-41		34
	09-42		34
327308A1	09-41		36
327372A1	06-41		50
327554A1	05-24		8
327556A1	05-23		8
327572A2	07-07		29
327835A1	03-23		14
	03-24		18
327836A1	03-23		15
	03-24		19
327970A1	07-18		31
328134A1	08-01		37
328501A1	04-32		11
329057A1	09-34		7
	09-35		7
329677A1	05-01		25
329701A1	08-01		36
329804A1	08-09		18
330137A1	09-43		26
330162A1	06-41		40
330276A3	09-44		1
333104A2	09-30		11
333107A1	09-30		13
333108A2	09-30		15
333273A1	09-31		1
	09-32		1
333274A1	09-31		2
333274A2	09-32		2
333275A1	09-31		3
333276A1	09-31		4
333278A1	09-31		7
	09-32		7
333279A1	09-31		9
333280A1	09-31		10
333283A2	09-31		12
	09-32		12
333284A1	09-31		13
	09-32		13
333285A1	09-31		14
	09-32		14
333286A1	09-31		15
333287A2	09-31		17
	09-32		17
333288A2	09-31		18
	09-32		18
333295A1	09-31		22
	09-32		22
333296A1	09-31		24
	09-32		24
333336A1	09-55		28
333337A1	09-55		11
	09-57		7
333617A1	05-10		
	05-10		
	05-11		
	05-11		
	05-12		
	05-12		
	05-13		
	05-13		
	05-14		
	05-14		
	05-14		
	05-15		
	05-15		
333659A1	09-31		16
	09-32		16
333660A1	09-31		23
333772A1	09-24		38
	09-27		22
333773A1	09-26		34
334216A1	08-14		8
	08-15		8
334218A1	08-14		11
335704A1	09-08		17
335705A1	09-08		17
336199	04-02		13
336383A1	09-26		39
336384A1	09-27		24

Number	Figure	Sequence	Ref.
336385A1	09-26		40
336427A1	03-22		3
	03-24		3
336429A2	03-22		14
	03-24		14
	03-25		1
336430A1	03-25		2
336431A1	03-25		3
336432A1	03-25		4
336433A1	03-25		5
336494A1	09-49		32
	09-52		7
336724A1	06-46		1
336725A1	06-46		1
336726A1	06-46		1
336727A1	06-46		1
336728A1	06-46		1
337589A1	09-05		20
337680A1	06-24		36
337880A1	09-03		12
339158A1	09-01		15
339770A1	06-02		12
	06-02		35
	06-02		49
3401424R1	07-19		3
341205A1	06-02		9
341206A1	06-02		9
341207A1	06-02		33
341208A1	06-02		33
341209A1	06-02		46
341210A1	06-02		46
341418A2	06-42		3
344728A1	09-19		2
344730A1	09-19		1
345193A1	08-23		
345427C1	05-18		37
	05-19		37
	05-20		37
345688A4	05-18		
347610A1	04-30		11
347616A1	05-25		
347617A1	05-26		
347618A1	05-25		1
	05-26		1
347755A1	08-14		22
	08-15		21
347756A1	08-14		21
348390A1	09-63		14
348474A1	08-11		14
	09-05		49
349233A1	08-09		21
349292A1	07-09		8
	08-17		7
349295A1	07-09		
	08-17		
349940A1	09-05		23
351005A2	09-05		34
351005A3	09-02		2
352416A2	03-25		11
352782A1	05-10		49
	05-11		49
	05-12		49
	05-13		49
	05-14		49
	05-15		49
352787A2	06-32		39
352790A1	02-04		10
352792A1	02-04		11
353-401	04-14		38
353-402	04-14		38
353-411	09-15		14
	09-26		58
353-425	09-15		15
353-432	09-13		22
	09-14		22
353083A1	02-01		11
353693A1	08-11		33
353695A1	08-11		11
353703A1	08-11		31
353711A1	08-11		10
355099A1	09-27		11
355100A1	09-27		10
355101A2	09-26		50
355102A2	09-26		51
355298A2	04-33		19

Number	Figure	Sequence	Ref.
355299A2	04-33		18
355623A2	04-33		1
355763A2	09-05		27
356412A1	03-22		9
	03-24		9
356413A3	03-22		4
356414A1	03-22		10
	03-24		10
356415A2	03-22		5
356930A3	09-05		46
356969A4	09-05		40
356970A4	09-05		40
357072A1	09-25		10
357074A1	09-25		11
357075A1	09-25		12
357158A2	02-01		44
357168A2	09-26		21
357169A2	09-26		20
357194R1	06-39		42
357476A1	09-04		4
357749A1	09-05		6
	09-51		3
357829A1	09-25		6
357830A1	09-25		5
358204A3	09-29		
358235A1	09-26		2
358296A1	04-12		9
358352A1	09-04		12
358353A1	06-31		15
358667A1	09-27		25
358670A1	09-28		2
358671A1	09-28		1
358672A1	04-13		1
	09-28		3
358682A1	09-26		33
358683A1	09-23		9
	09-24		19
358772A1	09-23		3
358790A1	09-23		2
358794A2	09-24		2
358795A1	09-24		
358797A1	09-24		4
358798A1	09-24		5
358802A1	09-27		1
358804A1	04-12		5
	09-27		16
358805A1	09-26		3
358806A1	09-26		8
358807A1	09-26		30
358812A1	09-35		2
358814A1	09-34		4
	09-35		4
359027A1	09-33		1
359028A1	09-33		3
359029A1	09-33		5
359030A2	09-33		1
359031A2	09-33		3
359032A1	03-16		2
	03-17		2
359033A1	05-01		27
359034A1	09-27		7
359035A1	09-27		6
359036A1	09-26		29
359037A1	09-26		27
359039A1	09-33		9
359049A1	09-05		7
359116A1	06-33		2
359117A1	06-33		3
359188A2	09-49		30
359189A2	09-05		15
	09-51		18
359321A1	09-13		24
	09-14		24
359436A2	09-04		5
359594A1	04-28		33
359807A1	04-28		6
359851A1	08-11		21
359879A1	08-11		19
359950A1	09-30		28
359951A1	09-30		27
359959A1	09-30		4
360032A1	09-41		54
360033A1	09-20		1
360195A3	02-01		13
360319A2	09-30		
360322A1	09-27		29
360324A2	09-29		1
360328A2	09-30		2
360329A1	09-30		1
360362A1	09-26		23
	09-26		31
	09-26		6
	09-27		9
	09-28		5
360363A1	09-28		6
360364A1	09-24		11
360365A1	09-26		41
	09-26		41
360437A1	09-25		
360525A1	03-22		22
	03-24		22
361024A3	05-01		1
361044A1	09-30		25
361880A1	08-23		15
361992A2	02-06		18
362341A1	02-06		14
362394A1	09-28		8
362976A1	08-11		34
363-11028	04-03		4
363250A1	03-21		19
363250A2	03-22		19
363255A1	07-13		30
	07-14		22
363279A3	03-20		1
363881A1	09-44		9
363930A1	09-44		7
363931A1	09-44		9
364279A1	09-26		52
364281A1	09-26		53
364375A1	09-05		65
364377A1	09-05		61
364427A1	09-05		67
364462C1	06-02		28
364463C91	06-02		27
364465C1	06-08		41
	06-09		41
364751A1	02-06		20
365219A1	09-15		18
365221A3	09-05		45
365372A1	05-27		5
365829A1	02-04		19
366073A1	05-01		9
366505A1	09-05		68
366631A2	04-33		1
366867A2	04-05		20
366870A1	09-02		3
	09-05		35
	09-05		44
367349A1	02-05		2
367350A1	02-05		3
367421A3	08-20		
367607A1	03-16		20
	03-17		15
367682A1	02-10		7
367683A1	09-12		1
367684A1	09-12		2
368048A1	03-16		3
	03-17		3
	04-14		4
368143A1	04-08		11
	09-23		11
	09-24		46
368728A1	05-12		
	05-15		
368761A1	09-34		18
	09-35		53
369275A1	09-37		1
369378A1	06-33		8
369841A1	03-25		6
369842A1	03-25		7
369843A1	03-25		8
369844A1	03-25		9
369941A1	06-33		9
37-11232	06-32		5
37-1828	07-06		19
37-188	06-08		56
	06-09		56
370030A1	09-05		5
	09-51		2
370061A1	09-46		23

Number	Figure	Sequence	Ref.
370105A2	05-01		29
370217A1	09-05		
	09-51		
371336A1	09-34		
	09-35		
371731A1	09-34		16
	09-35		51
371838A1	09-37		4
372110A1	03-22		6
372116A1	09-05		41
372228A1	08-20		
372455A1	09-37		5
372892A1	04-08		5
	09-24		44
372943A2	09-64		7
373114A1	04-08		16
	09-24		45
373170A1	09-05		51
373182A1	09-05		71
373462A2	09-30		29
373463A1	09-30		18
373464A1	09-30		19
373465A1	09-30		20
373466A1	09-30		21
373467A2	09-30		22
373468A1	09-30		25
373469A1	09-31		11
373470A2	09-31		19
	09-32		19
373471A1	06-41		8
	06-43		10
373472A1	09-31		20
373473A1	09-31		21
	09-32		21
373474A1	06-41		8
	06-43		10
373756A1	08-21		
373757A1	08-21		
373758A1	08-21		6
373760A1	08-21		17
373761A1	08-21		26
374353A2	09-29		2
	09-31		
374359A1	09-31		25
	09-32		23
374361A1	09-30		16
374386A1	09-30		26
374387A1	09-30		12
374388A1	09-30		15
374653A1	09-22		23
375198A1	09-30		3
375200A1	09-30		30
375225A1	09-30		5
375261A1	09-22		23
375302A1	07-07		2
375362R1	06-02		2
375374R1	06-40		42
375681A1	06-31		8
376597A2	04-12		2
	09-27		33
377176A3	05-18		
377177A3	05-18		
377206A2	09-49		1
	09-56		55
	09-60		1
	09-61		35
377592A1	02-06		26
377751A2	06-45		14
377915A2	09-05		
377916A2	09-05		
377919A1	05-10		
	05-11		
	05-13		
	05-14		
377950A1	09-34		15
	09-35		50
377974A1	09-51		
377975A1	09-51		
378041A3	09-27		2
378409A1	05-10		12
	05-11		12
	05-13		12
	05-14		12
378410A1	05-12		12
	05-15		12
378683A1	09-64		8
378684A1	09-64		8
378704A1	09-04		22
378711A1	08-26		
378712A1	08-25		
378716A1	09-49		19
	09-50		6
378717A1	08-26		11
378802A1	04-05		10
378919A1	08-24		11
378922A1	08-24		
378929A1	09-49		4
378932A1	09-49		6
379145A1	06-32		36
	09-49		2
	09-55		2
	09-57		2
	09-60		2
	09-61		36
379145A2	09-56		64
379554A1	02-05		4
38-11608	06-47		11
	06-47		22
38-21240	06-41		27
38-32044	06-41		38
38-3605	06-02		42
	06-08		5
	06-08		61
	06-09		5
	06-09		61
	06-12		4
	06-18		3
	06-20		2
	06-39		5
380164A1	06-43		26
380165A1	06-43		26
380739A1	08-14		24
	08-15		6
380740A1	08-14		26
	08-15		11
381642A1	09-05		16
	09-51		19
381940A1	09-33		19
382147A1	02-10		2
382148A1	02-10		4
382150A1	02-10		1
382635A1	05-10		10
	05-10		6
	05-11		10
	05-11		6
	05-13		10
	05-13		6
	05-14		10
	05-14		6
384571A1	08-11		30
384834A1	07-02		30
	07-03		39
	07-04		43
384870A1	05-03		46
	05-04		46
	07-02		13
	07-03		13
	07-04		13
	07-13		7
	07-14		5
	07-16		35
	07-17		36
	08-04		72
	08-05		72
384871A1	05-03		47
	05-04		47
	07-13		31
	07-14		23
	07-16		36
	07-17		37
385358A1	08-14		27
	08-15		20
385900A1	06-35		7
386535A1	09-41		3
	09-42		3
387024A1	07-02		21
	07-03		21
	07-04		21
387123A3	09-16		12
387161A1	05-03		50

Number	Figure	Sequence	Ref.	Number	Figure	Sequence	Ref.
387161A1	05-03		63	398610A1	08-09		27
	05-04		50	399428A5	04-10		1
	05-04		63		04-11		1
387171A1	04-28		34	399933C91	06-38		18
387281A1	04-28		35	399934C1	06-38		19
387611A1	08-22		29	400164A1	09-29		
387795A1	02-08		3	400179A1	09-30		
387796A1	02-08		5	400181A1	09-29		1
387798A1	02-08		4	400184A1	09-29		2
387929A1	08-15		1		09-32		
38834	06-39		12	400669A1	07-16		15
388366A1	06-35		2		07-17		15
389379A2	02-37			400692A1	07-02		7
389550A1	06-38		1		07-03		7
	08-03		6		07-03		7
	08-04		1		07-04		7
	08-05		1		07-04		7
389681A2	09-10		3	400827A2	09-23		1
391414A1	09-30		23	400829A2	09-24		1
391415A1	09-48		40	400859A3	07-01		1
391624A1	04-28		36	400862A3	07-01		10
392004R1	09-04		21	400865A1	07-01		22
393289A1	09-42		60	401109A3	04-23		12
394013A1	09-23		20	401110A2	09-15		19
394133A1	04-22		7	401251A4	05-01		20
394326A1	06-38		9	401336A1	08-09		38
394438A1	09-10		48	401360A1	09-41		53
394509A1	02-02		4	401363A3	08-03		1
394717A4	04-17		15		08-08		1
	09-38		7	401600A1	08-01		34
394773A1	09-10		47		08-03		27
394774A1	09-10		47		08-04		11
394957A1	09-42		70		08-08		2
395481A1	06-35		10	402006A1	08-04		4
	06-35		11	402007A2	08-05		4
395734A1	05-16			402652A1	08-03		34
395735A1	05-16			403214A1	09-29		
395737A1	05-16		6	403356A1	07-05		16
	05-17		6	403416A1	08-03		12
395738A1	05-16			403534A1	05-03		54
	05-17			403534A2	05-04		54
395740A1	05-16		5	403585A1	09-38		2
	05-17		5	404173A1	06-38		14
395741A1	05-16		1	40435	06-20		19
395743A1	05-16		1	404438A5	08-01		29
395764A1	09-10		49		08-03		32
396-31081	06-47		20		08-16		
	06-47		9	404442A1	08-16		23
	09-01		14	404443A2	08-16		29
	09-01		4	404659A3	03-18		1
	09-03		3		03-19		3
	09-03		6	405010A2	04-16		1
	09-05		2		09-26		13
396069A4	06-14		1	405011A3	09-26		60
396441A6	05-13			405012A1	09-26		10
396518A1	05-25			405361A1	09-50		1
396519A1	05-26			405362A2	09-50		2
396520A1	05-25		1	405364A1	09-50		7
	05-26		1	405366A1	09-50		11
396591A1	05-03			405370A1	09-50		5
	05-03			405409A1	08-05		11
	05-04			405439A1	04-01		10
	05-04			405664A2	06-38		20
396829A1	02-07		8		08-04		2
397101A6	07-01		33		08-05		2
397105A5	07-05		3	405812A1	06-47		17
397106A5	07-05		4		06-47		6
397110A1	07-05		11	405815A1	06-47		7
397111A1	07-05		17	405816A1	06-47		18
397240A1	04-05		19	405822A1	06-48		1
	07-08		31	405823A1	06-48		5
397496A1	04-05		16	405824A1	06-48		9
	04-21		11	405825A1	06-48		13
397511A1	02-03		2	405828A1	06-49		1
397520A3	09-29			405829A1	06-49		6
397525A1	09-30			405830A1	06-49		11
397526A1	09-29		1	405844A2	09-03		1
397702A1	09-42		58	405845A2	09-03		4
397703A1	09-42		59	405846A3	09-03		10
397704A1	09-42		36		09-03		15
397780A1	09-42				09-03		20
398101A1	09-42		71	405847A2	09-04		1
398406R1	09-04		18	405848A1	09-04		15
	09-05		70	406315A2	04-14		56
398610A1	08-02		25		09-34		12

Number	Figure	Sequence	Ref.
406315A2	09-35		43
406324A2	04-14		37
	04-15		5
	04-16		5
406697A2	05-01		7
	05-02		
406718A1	09-44		31
406961A1	04-14		5
406962A1	04-14		2
407118A2	04-05		7
407142A1	07-01		34
407253A1	09-04		2
407282A1	07-05		10
407298A6	05-14		
407300A6	05-15		
407310A6	05-11		
407312A6	05-12		
407364A1	08-03		9
407386A1	08-03		7
407387A1	07-05		8
407615A2	08-03		38
	08-08		49
407616A2	08-03		37
	08-08		48
407759A1	09-34		13
	09-35		44
408239A1	09-10		11
408411A1	05-03		56
	05-04		56
408412A1	05-03		57
	05-04		57
408447A1	08-16		30
408521A3	09-34		1
	09-35		1
408735A1	09-39		51
	09-40		14
408863A1	04-27		3
408865A1	04-27		4
409205A2	09-24		3
409206A1	09-23		5
	09-24		9
409218A1	08-02		15
409304A2	04-15		1
	09-26		13
409426A3	04-33		6
409603A2	04-14		18
409738A1	06-22		57
409741A1	06-32		13
409965A1	09-39		1
409966A1	09-39		2
41-1018	06-14		6
	06-15		6
	06-16		6
41-1024	02-30		17
41-1038	06-14		7
	06-15		7
	06-16		7
41-1616	02-29		7
41-1622	02-08		20
41-3044	02-36		15
	02-37		15
410573A1	07-14		69
410749A3	06-32		1
411075A1	06-32		10
411632A1	04-25		6
411705A3	04-14		55
411821A3	04-14		27
411976A1	04-05		8
412082A1	08-13		11
412084A1	08-13		13
412302A6	05-10		
412360A2	04-34		6
412425A1	09-44		32
412509A2	08-09		37
	08-21		
412509A3	08-18		9
	08-21		
412509A4	08-18		9
	08-21		
412533A1	09-50		3
412534A1	09-50		4
412536A2	09-50		10
413-10136	06-49		16
413-1088	06-49		16
413467A1	09-48		20
413665A1	06-39		31
	06-40		31
413825A1	06-33		12
413826A1	02-27		24
413900A1	06-32		21
413993A1	08-04		84
	08-05		84
414-432	03-05		22
414075A1	02-04		16
414080A1	09-39		28
414081A1	09-39		22
414082A1	09-39		27
414083A1	09-39		23
414144A1	06-30		6
414177A1	02-08		21
414194A1	02-04		13
414241A1	09-39		45
414262A1	09-39		50
414267A2	09-39		49
414320A1	06-32		24
414360A1	02-32		10
	02-33		10
414388A2	02-03		3
414416A3	06-32		20
414556A2	05-05		1
414601A2	08-02		7
414642A2	02-06		15
414696A1	09-50		21
414804A1	02-03		8
414808A3	07-15		1
414850A1	09-40		10
414916A4	08-02		6
416025A2	08-02		2
416249A2	08-02		20
416250A2	08-02		21
416255A3	06-30		1
416300A1	08-02		8
416400A2	08-02		10
416401A2	08-02		11
416403A2	08-02		13
416432A2	08-09		5
416433A3	08-09		6
416569A1	04-03		6
416570A1	04-03		7
	04-03		7
416591A1	04-27		7
417375A2	02-01		30
417390A1	02-01		33
417631A1	02-08		
417742A1	09-44		3
417845A2	09-39		20
417849A1	02-02		5
417858A2	02-02		
417859A2	02-02		
417934A1	02-03		10
418485A1	04-10		9
419207A1	08-02		16
419210A1	08-02		14
419211A1	08-02		19
419212A1	08-02		18
419814A2	05-03		30
425-104	04-27		24
	09-37		7
425-105	04-10		12
425-147	04-17		10
425-1510	08-16		9
	08-19		2
425-154	03-07		41
425-155	02-21		3
	02-22		3
425-2810	06-49		17
426-820	04-17		8
426356A1	02-01		32
426550A1	09-06		11
	09-07		11
426575A1	09-26		1
426576A1	09-26		1
426580A1	09-26		19
426756A1	08-13		10
426757A1	08-13		9
427-6106	07-07		22
	07-07		6
427-6125	07-07		7
427-6200	07-18		12
	09-49		20

Number	Figure	Sequence	Ref.
427182A1	04-13		2
427242A1	09-41		7
	09-42		7
427352A1	09-41		58
	09-42		65
427353A1	09-41		57
	09-42		64
427354A1	09-41		59
	09-42		66
427356A1	09-41		
	09-42		
427360A1	09-41		56
	09-42		63
427509A1	02-01		4
428192A2	09-26		61
428264A4	09-23		16
	09-24		42
428302A1	07-07		19
428306A1	07-07		25
428359A3	02-11		19
428391A1	09-58		
428394A1	09-59		
428403A1	09-59		
428484A1	09-39		14
428609A2	05-05		2
429-1314	05-10		23
	05-10		30
	05-11		23
	05-11		30
	05-12		23
	05-12		30
	05-13		23
	05-13		30
	05-14		23
	05-14		30
	05-15		23
	05-15		30
	05-23		22
	05-24		22
429210A1	09-39		58
429228A1	02-01		43
429830A1	09-01		12
	09-05		1
430167A2	08-02		5
430396A1	08-02		
4304140R91	07-19		2
431025A1	04-30		10
	04-31		
431479A1	08-19		14
431716A1	07-15		37
431858A1	08-03		41
	08-08		52
431941A1	09-19		62
432-1216	09-06		14
	09-07		14
432-48	07-11		8
	07-12		8
432-610	09-49		21
432-820	05-10		33
	05-10		36
	05-11		33
	05-11		36
	05-12		33
	05-12		36
	05-13		33
	05-13		36
	05-14		33
	05-14		36
	05-15		33
	05-15		36
432239A1	04-15		10
	04-16		10
432906A1	08-12		1
	08-17		
433158A1	08-01		16
433196A2	07-05		12
433199A1	07-05		2
433386A1	08-11		20
433387A1	08-01		16
433388A1	08-01		14
433585A1	08-03		28
433586A1	08-01		25
433588A1	07-02		16
	07-03		16
	07-04		16
433589A1	08-06		21
433591A1	05-03		19
	05-04		19
433592A1	08-04		65
	08-05		65
433595A2	07-08		5
433713A1	07-15		3
433800A1	09-15		12
433945A1	07-13		20
	07-14		15
433946A1	07-13		21
	07-14		16
433974A3	09-15		1
434000A1	07-13		22
434093A1	07-13		15
	07-14		37
434177A1	02-01		27
	02-06		5
	05-01		10
	09-39		3
434850A1	08-08		12
435211A2	04-08		1
435388A3	06-40		4
435389A1	06-40		47
435393A1	06-40		44
435535A1	06-41		6
	06-43		23
	06-43		5
435536A1	06-41		5
	06-43		22
	06-43		4
435629A2	08-01		3
435633A2	08-01		2
435636A1	06-40		15
435643A1	08-18		14
435664A1	05-23		20
	05-24		20
435713A1	07-15		28
435716A1	06-40		12
435718A3	06-40		37
435892A2	06-40		43
435955A1	06-47		
435956A1	06-47		
435961A1	06-49		
435962A1	06-49		
435963A1	06-49		
435970A1	09-03		
435971A1	09-03		
435972A1	09-03		
435973A1	09-03		
435974A1	09-03		
435975A1	09-04		
435976A1	09-04		
436058A2	04-25		5
436163A1	08-09		34
436252A1	06-40		29
436285A1	07-08		29
	07-10		24
436382A1	07-02		14
436383A1	07-02		15
436432A1	04-23		15
436518A1	08-20		38
436811A1	08-13		8
436812A1	08-09		9
436813A1	08-13		6
436814A1	08-13		5
436815A1	08-13		7
436854A1	08-20		60
437015A1	05-03		25
	05-04		25
437249A1	02-06		1
437324A1	04-15		11
	04-16		11
437336A1	08-08		32
437336A2	08-08		32
437550A1	04-07		2
437785A3	09-15		3
437790A3	08-20		
439-11236	09-52		5
439-5860	09-06		13
	09-07		13
440038A1	04-10		17
440076A1	06-32		25
440140A1	02-11		22
	02-12		19

Number	Figure	Sequence	Ref.
440431A1	02-03		36
440561A1	08-04		56
	08-05		56
	08-05		56
440572A1	04-10		18
440729A1	02-03		19
441460A1	09-14		28
	09-15		13
441479A2	04-03		11
441480A2	04-03		1
441483A1	04-03		12
441554A2	06-24		
441597A1	06-48		
441598A1	06-48		
441599A1	06-48		
441600A1	06-48		
442240A1	07-04		33
442244A1	09-23		15
	09-24		40
442245A1	09-24		15
442323A1	02-08		9
442844A2	09-12		4
442847A1	08-03		47
	08-08		47
442908A1	07-19		5
442909A1	07-19		4
442922A1	07-18		41
442923A1	07-20		7
442924A1	07-16		26
	07-17		26
442925A1	07-16		30
	07-17		30
	07-18		19
	07-19		18
	07-20		10
442926A1	07-18		17
442927A1	07-18		32
442928A1	07-18		15
442929A1	07-16		28
	07-17		28
	07-18		38
	07-19		21
	07-20		15
442930A1	07-16		25
	07-17		25
442931A1	07-19		16
443287A1	07-16		10
	07-17		10
443761A1	07-13		48
	07-14		47
	07-19		25
	07-20		13
444052A1	02-08		9
444196A2	06-26		10
	06-27		21
	06-28		17
	06-29		19
444547A1	04-12		1
	09-27		15
444798A2	06-44		20
444799A2	06-44		3
444801A1	06-44		21
444803A2	06-44		1
444805A1	06-44		10
444806A1	06-44		10
444807A1	06-44		10
444809A1	06-44		10
444954A1	05-06		3
445014A1	08-14		6A
445015A1	08-14		9A
	08-15		9A
445303A1	05-03		1
	05-04		1
445304A1	05-03		1
	05-04		1
445448A1	09-47		10
445452A2	09-47		16
445492A2	06-06		8
	06-07		2
	06-17		
445494A1	06-06		12
	06-07		6
	06-17		31
445532A2	06-07		1
445533A2	06-03		35
445533A2	06-07		
445535A2	06-03		19
	06-06		
	07-08		1
	07-11		14
445537A2	06-14		36
	06-15		36
	06-16		36
	06-17		
445991A1	06-44		
446035A1	07-16		4
	07-17		4
446061A1	09-17		4
446062A1	09-17		7
446063A2	09-17		1
446064A1	09-17		5
446065A1	09-17		6
446066A1	09-17		11
446136A3	09-14		1
446176A1	04-05		11
446268A1	06-44		22
446269A1	06-44		23
446342A1	09-09		8
446347A1	07-14		1
446394A1	09-09		8
446403A1	08-20		9
446404A1	08-20		57
446405A1	08-20		58
446487A1	03-18		2
	03-19		4
446488A1	03-18		3
	03-19		5
446596A4	06-40		10
446597A2	06-40		23
446598A4	06-40		16
446643A1	08-11		6
446670A1	09-39		25
446759A1	06-44		15
446773A1	08-11		27
446775A1	08-11		28
446820A2	09-25		13
446822A2	09-25		1
446823A1	09-25		14
446824A2	09-25		15
446890A1	02-12		18
446943A1	06-40		
447217A1	09-61		
447218A1	09-60		
	09-61		
447220A6	08-18		6
	08-20		
447223A4	08-18		7
	08-20		
447226A5	08-18		5
	08-18		7
	08-20		
	08-20		
447248A1	09-62		1
447249A1	09-62		6
447250A1	09-62		2
447251A1	09-62		7
447252A1	09-62		3
447253A1	09-62		8
447254A1	09-62		4
447255A1	09-62		9
447256A2	06-31		7
447408A1	09-60		
	09-61		
447501A2	04-30		10A
	04-31		
447528A3	08-18		1
	08-19		
447528A4	08-18		1
	08-19		
447666A1	04-32		10
447672A1	05-09		52
447742A1	04-31		33
447754A2	04-31		31
447916A1	02-01		7
447917A2	02-01		5
448102A2	08-16		24
448476A1	04-23		18
448524A1	07-14		40
448527A1	07-14		43
448529A2	07-14		87

Number	Figure	Sequence	Ref.
448548A1	07-14		45
448560A1	05-03		53
	05-04		53
448713A1	09-12		38
448715A1	09-12		36
449019A1	02-36		
449059A1	09-60		5
	09-61		1
449060A1	09-56		5
	09-56		9
	09-60		13
	09-60		7
	09-61		3
	09-61		9
449061A1	09-56		
	09-60		
	09-61		
449062A1	09-56		11
	09-60		8
	09-61		4
449065A1	09-60		5
	09-61		1
449066A1	09-56		10
	09-60		9
	09-61		5
449067A1	09-56		6
	09-60		6
	09-61		2
449070A1	09-56		11
	09-60		8
	09-61		4
449074A1	09-15		22
449874A1	07-08		17
449901A1	09-15		2
450061A1	07-07		14
	07-08		14
	07-09		
450465A1	09-56		4
	09-60		12
	09-61		8
450500A1	08-13		12
450501A1	08-13		14
450502A1	08-15		15
450503A1	08-09		14
450506A2	08-09		15
450507A1	08-04		29
	08-05		29
	08-09		16
450508A1	08-04		27
	08-05		27
450509A1	08-08		23
450510A1	08-08		24
450512A1	08-06		25
450515A1	08-04		51
	08-05		51
450612A1	09-56		
	09-60		
450613A1	09-56		20
	09-60		40
450672A1	04-32		5
450721A2	06-25		2
	06-27		
450726A2	06-25		2
	06-28		
450728A2	06-25		3
	06-29		
450729A2	06-25		1
	06-26		
450780A1	09-60		
450894A2	09-09		1
450895A2	09-09		1
450896A2	09-09		5
450897A2	09-09		5
450931A1	09-13		26
450986A1	09-13		25
451023A1	03-06		23
451054A1	08-04		43
	08-05		43
451055A2	08-04		20
	08-05		20
451056A1	05-03		8
	05-04		8
451058A1	07-13		18
	07-14		14
451059A1	08-06		32
451060A1	08-08		28
451061A1	08-01		30
451063A1	07-07		12
451064A1	08-03		23
	08-08		6
451179A1	07-08		9
451179A2	07-08		9
451209A1	08-04		61
	08-05		61
451211A1	08-04		74
	08-05		74
451226A1	08-04		57
	08-05		57
451781A1	08-04		5
	08-05		5
451837A1	09-56		26
	09-60		46
	09-61		22
451990A1	09-60		
451995A1	05-10		39
	05-11		39
	05-12		39
	05-13		39
	05-14		39
	05-15		39
452001A1	05-06		14
	05-07		1
452005A1	05-06		6
452698C1	04-20		2B
461-31016	03-16		17
	03-18		19
461-42512	09-19		29
463-11012	04-03		3
463-61010	09-11		8
470375C1	09-39		62
47125482	05-07		13
47126449	05-07		12
47126451	05-07		8
47126452	05-07		7
47126454	05-07		3
472163R1	06-38		8
473321C1	03-07		43
	03-16		52
	03-17		32
	03-18		23
	03-19		2
486830R1	09-49		5
490-11010	09-43		27
490-1108	04-02		21
492-11010	03-16		12
492-11025	03-07		40
492-11031	04-10		13
492-11044	04-17		9
493-11020	04-03		5
493-21020	09-11		9
493-81002	09-41		29
	09-42		29
495-21031	04-25		17
	04-25		26
495-21044	06-30		15
495-21063	04-18		22
495-21069	05-10		47
	05-11		47
	05-12		47
	06-45		17
495-31022	09-43		23
495-31027	04-16		22
	09-19		16
495-81020	03-18		26
	03-19		30
495-81022	03-16		41
	03-17		21
495-81107	03-18		25
495-81120	02-01		28
	02-06		6
	09-39		5
495-81121	09-43		17
	09-43		21
495-81140	02-01		52
	09-15		6
	09-16		16
495-81252	04-20		42
496-11034	02-01		45
	05-18		49
	05-19		49

Number	Figure	Sequence	Ref.
496-11034	05-20		49
496-21066	06-49		18
496-31094	06-46		3
	06-47		16
	06-47		3
	06-48		11
	06-48		15
	06-48		19
	06-48		3
	06-48		7
496-81028	05-01		17
511-10200	08-21		15
511-1070	07-10		25
514-620	09-36		9
514-632	09-36		2
514-633	09-36		6
514-637	04-28		3
	09-22		24
514-742	05-06		15
514-745	03-20		36
515-21127	09-41		37
515-21190	02-03		39
515-2179	04-26		9
515-2195	04-05		23
	09-42		37
515-22127	07-13		49
	07-14		34
	07-19		22
	07-20		11
	08-11		9
515-22159	03-20		51
	09-40		27
515-22190	04-07		4
	08-01		18
	08-14		33
515-22254	08-08		56
515-22317	08-04		40
	08-05		40
515-22349	08-04		44
	08-05		44
515-2295	07-03		36
	07-04		40
	07-13		52
	07-14		36
	08-04		77
	08-05		77
	08-14		34
515-23127	02-17		21
	02-18		21
	05-03		49
	05-04		49
	06-23		42
	08-06		38
515-23206	08-09		23
515-23238	07-18		20
	08-11		35
515-23286	07-13		42
	07-14		52
515-23317	04-01		20
	04-02		12
	08-04		48
	08-05		48
515-2363	03-01		26
515-2395	09-22		22
515-2495	08-07		22
515-25159	08-09		13
516-22127	04-07		5
	04-25		7
	07-11		12
	09-10		15
516-2295	04-24		8
516-2395	04-05		5
543-702	04-33		20
54404R1	06-18		40
555-1	09-11		4
555-4	09-17		16
555-5	03-20		21
	09-17		15
555-6	09-06		17
	09-07		17
	09-17		15
555-7	09-17		14
555570R1	06-39		51
565-111	09-06		16
	09-07		16

Number	Figure	Sequence	Ref.
566-12035	06-21		18
572182R1	06-08		28
	06-09		28
	06-11		42
	06-12		17
	06-13		17
	06-18		18
	06-20		9
	06-40		11
60-2404T1	03-16		10
	03-19		25
60-7083T1	09-19		15
607146R91	06-39		19
612-4	02-01		48
612-6	09-06		3
	09-07		3
613-10025	06-10		18
	06-11		12
613-10030	06-08		48
	06-09		48
	06-13		51
	06-18		49
	06-20		47
613-10035	06-38		23
	06-38		3
613-12025	06-32		43
613-12040	06-08		57
	06-09		57
613-16040	06-22		46
613-16045	06-22		46
614-10016	02-08		12
	05-03		59
	05-04		59
614-10020	06-02		53
	06-02		73
	06-23		43
	07-07		13
	08-06		39
614-10025	04-29		22
	09-18		5
	09-60		30
614-10030	07-08		19
614-10035	05-01		18
614-10040	06-03		28
	06-04		28
	06-05		28
	06-42		5
	08-13		3
	09-60		29
614-10090	07-15		36
614-12025	02-28		8
	04-22		16
614-12030	02-10		6
	09-12		3
614-20040	07-20		5
614-5045	09-53		3
614-6012	04-05		24
	04-23		11
	07-15		25
	09-41		26
	09-42		26
	09-56		32
	09-60		61
614-6016	06-45		21
	06-45		43
614-6020	04-26		10
	09-42		53
	09-56		12
	09-60		10
	09-61		6
614-8012	02-02		7
	04-01		21
614-8016	07-11		11
	07-13		28
	07-14		20
	08-01		19
	08-11		32
	09-19		27
	09-40		29
614-8020	02-01		51
	02-20		20
	04-24		9
	05-03		55
	05-03		60
	05-04		55

Number	Figure	Sequence	Ref.
614-8020	05-04		60
	08-04		50
	08-05		50
	09-16		13
	09-39		64
	09-40		13
	09-54		9
614-8025	04-01		4
	04-02		4
	07-01		17
	07-07		4
	09-08		2
	09-08		21
	09-08		9
	09-09		2
	09-12		45
	09-39		59
	09-39		63
614-8030	02-01		29
	09-22		16
	09-22		6
614-8035	09-19		12
615-10025	09-14		26
615-12020	04-01		23
	04-02		23
615-12035	08-03		4
615-6012	09-61		29
615-8012	02-17		22
	02-18		22
619697C1	06-36		4
	06-37		4
622336C1	06-22		23
627-10025	08-03		11
627-10040	09-05		26
627-12025	03-20		2
	03-20		29
627-12030	09-46		13
	09-47		13
627-12040	09-34		8
	09-35		8
627-12080	06-43		29
627-14045	05-10		14
	05-10		18
	05-11		14
	05-11		18
	05-12		14
	05-12		18
	05-13		14
	05-13		18
	05-14		14
	05-14		18
	05-15		14
	05-15		18
627-16040	09-06		12
	09-07		12
627-20050	09-18		2
627-6016	03-16		38
627-8020	07-11		6
	07-12		6
627-8025	09-35		27
	09-41		28
	09-42		28
627639R1	06-08		52
628-10025	05-09		53
	06-14		21
	06-15		21
	06-16		21
	08-18		16
628-10030	04-17		17
	06-39		30
	06-40		30
	06-41		14
	06-41		2
	06-43		14
	06-43		2
	06-44		2
	07-10		29
	08-03		14
	09-38		9
628-10035	06-03		27
	06-04		27
	06-05		27
	06-32		27
628-12025	06-32		38
628-12030	05-21		17

Number	Figure	Sequence	Ref.
628-12030	05-22		17
	06-01		2
628-16035	06-02		18
628-16050	06-24		38
628-20045	06-32		37
628-20060	06-02		61
	06-24		25
	09-49		3
	09-55		5
	09-56		59
	09-57		5
	09-60		3
	09-61		39
628-6016	03-07		8
628-6025	09-35		31
628-8016	05-18		50
	05-19		50
	05-20		50
	07-07		30
628-8025	08-20		65
630694C1	06-23		3
	06-39		33
	06-40		33
	07-10		12
630695C1	06-23		4
	06-39		34
	06-40		34
	07-10		13
630874C1	06-36		11
630899C1	06-36		3
637-62081	02-47		25
	03-05		10
637-63093	05-03		3
	05-04		3
	05-06		24
	08-04		59
	08-05		59
	08-09		29
637-63113	05-03		37
	05-03		40
	05-04		37
	05-04		40
	05-05		6
	05-06		71
	05-23		17
	05-24		17
	06-17		21
	06-17		29
	06-26		13
	06-26		3
	06-27		3
	06-28		3
	06-29		3
	06-32		29
	07-08		21
	07-08		25
	07-09		28
	07-10		27
	07-13		68
	07-14		62
	07-14		71
	07-14		81
	07-14		86
	08-04		63
	08-04		69
	08-04		81
	08-05		63
	08-05		69
	08-05		81
	08-06		30
	08-07		16
	08-07		5
	08-08		38
	08-14		37
	08-14		39
	08-15		25
	08-16		7
	08-17		21
	08-19		12
	08-19		23
637-63133	07-14		55
	08-10		3
637-63153	05-03		12
	05-03		15
	05-03		22

Number	Figure	Sequence	Ref.	Number	Figure	Sequence	Ref.
637-63153	05-03		33	637-64236	08-19		19
	05-04		12	637-64296	05-06		73
	05-04		15		07-13		65
	05-04		22		07-14		78
	05-04		33		08-03		21
	05-06		36		08-03		25
	05-06		64		08-04		22
	05-06		67		08-04		25
	06-03		67		08-04		31
	06-04		67		08-04		54
	06-05		67		08-04		79
	06-17		3		08-04		85
	06-23		40		08-05		22
	07-02		18		08-05		25
	07-02		27		08-05		31
	07-02		3		08-05		54
	07-02		9		08-05		85
	07-03		18		08-08		4
	07-03		27		08-14		29
	07-03		3		08-15		24
	07-03		9		08-19		26
	07-04		18		08-19		31
	07-04		27	637-64386	08-03		43
	07-04		3		08-08		54
	07-04		9	637-72081	02-30		3
	07-05		14		02-36		12
	07-08		11		02-37		12
	07-08		7		03-03		29
	07-09		12		03-06		25
	07-13		34		03-06		3
	07-13		40	638-53160	07-11		13
	07-13		60		07-12		13
	07-14		68	638-54145	06-41		59
	08-06		15	641-3432	09-49		35
	08-06		19	659458R1	06-02		5
	08-06		2		06-40		35
	08-06		23	663558R1	06-24		19
	08-06		27	67250C1	06-22		32
	08-08		21	67251C1	06-22		33
	08-08		26	67828C1	09-46		12
	08-08		30		09-47		12
	08-08		34	680187C1	03-07		10
	08-09		3	691292C1	03-07		9
	08-11		12	700-101	05-05		5
	08-11		17	700-102	05-03		20
	08-14		18		05-04		20
	08-14		25		07-02		17
	08-14		7		07-02		26
	08-15		19		07-03		26
	08-15		5		07-04		26
	08-17		17		07-13		59
	08-19		17		08-06		26
	08-27		13		08-08		25
637-63193	05-06		45		08-11		16
	05-06		49	700-103	05-06		48
	05-06		53		08-23		2
	05-06		57	700-104	08-01		26
	07-08		3		08-01		31
	08-03		49		08-03		29
	08-08		45		08-14		12
	08-09		11		08-15		12
	08-09		40	700-105	08-03		24
	08-09		43		08-04		21
	08-15		7		08-04		53
	08-19		21		08-04		84
	08-21		33		08-05		21
	08-23		3		08-05		53
	08-27		4		08-05		84
637-64236	05-03		27		08-08		3
	05-04		27	700-106	07-02		2
	05-06		12		08-14		17
	05-06		20	700-134	08-04		24
	06-17		5		08-05		24
	07-09		15	700-154	07-14		70
	08-01		27	700-157	08-10		2
	08-01		32	700-162	05-06		56
	08-03		30	700-164	08-03		20
	08-08		9	700-165	08-09		28
	08-14		10	700-169	07-14		53
	08-14		13	700-171	07-15		33
	08-15		10	700-303	08-06		29
	08-15		13	700-304	05-03		36
	08-15		17		05-04		36
	08-16		5		08-07		15
	08-17		19	700-305	05-03		14

Number	Figure	Sequence	Ref.
700-305	05-06		35
	06-03		65
	06-04		65
	06-05		65
	06-23		39
	07-02		22
	07-02		8
	07-03		22
	07-03		8
	07-04		22
	07-04		8
	08-06		1
	08-06		18
	08-09		2
700-306	08-03		48
	08-08		44
	08-09		10
	08-09		42
700-307	05-06		11
700-311	05-03		2
700-316	08-09		39
700-326	07-08		2
700-332	07-08		20
700-345	07-02		8
	07-03		8
	07-04		8
700-381	05-03		11
700-401	08-07		4
	08-08		37
700-402	07-08		6
	08-06		22
	08-08		33
700-412	05-03		32
	05-04		32
	07-03		2
	07-04		2
	07-08		10
	08-06		14
	08-08		29
700-420	05-06		44
700-441	08-04		62
	08-05		62
700-443	07-08		24
	07-14		61
700-445	05-06		52
701-120	05-06		18
701-121	05-06		29
701-1249	05-06		9
701-411	08-07		1
701-415	08-09		7
701-416	05-05		3
	08-06		12
701-417	08-01		9
	08-02		3
701-422	05-05		3
	08-04		66
	08-05		66
	08-09		31
	08-09		35
701-427	08-01		7
701-433	08-08		18
701-454	08-06		5
701-900	08-09		33
701-903	05-06		28
701-905	08-04		38
	08-05		38
	08-11		24
701-907	05-06		68
	07-13		58
	07-14		75
	08-04		82
	08-05		82
701-909	05-06		17
701-919	08-06		8
	08-11		5
713-125	09-19		35
713-126	07-07		18
713845R1	07-16		17
	07-17		17
716954R1	07-16		11
	07-17		11
718743R1	07-15		9
719686016	09-06		
719687016	09-07		
728-1280	09-50		8
728-620	07-07		26
728-630	07-07		20
733-1610	07-07		28
	09-19		33
733-2512	09-10		34
733-2520	07-07		24
	07-07		8
	07-18		14
733-4032	05-10		38
	05-11		38
	05-12		38
	05-13		38
	05-14		38
	05-15		38
733-5040	06-45		18
	09-05		63
738-1516	09-55		15
	09-55		23
	09-58		11
	09-58		4
	09-59		11
	09-59		4
738-1632	09-50		12
738-1825	07-01		5
738-51040	09-05		8
	09-51		4
738-5645	09-49		22
758-5	09-15		20
	09-23		17
	09-24		6
760-14113	09-33		10
760-14313	02-04		22
	04-25		28
760-14316	04-14		36
	09-34		3
	09-35		3
760-14413	04-10		19
760-14416	04-27		19
760-17113	09-26		62
760-17316	04-08		13
	04-33		4
	09-24		39
	09-26		63
761-17325	04-33		21
	09-23		6
	09-24		7
	09-27		30
765-14322	04-08		10
76904	03-05		26
779-14619	04-25		16
	04-25		25
	04-35		11
779-34319	04-07		3
779-34616	09-22		2
780-14625	04-27		15
	09-24		26
780-34319	04-05		17
	04-10		10
	04-10		6
	04-11		5
780-34395	09-44		24
781-24613	09-27		5
781-24620	09-20		22
781-24820	04-10		2
	04-11		2
	09-44		21
781-24825	09-41		51
	09-42		56
781-44625	09-19		43
782-84413	06-23		29
	07-10		59
79081900	02-04		17
	02-05		26
	04-01		7
	04-02		6
800-1112	03-19		24
	07-07		17
800-1140	09-60		31
800-1160	09-56		47
	09-60		57
800-3120	06-30		4
	07-01		15
800-316	03-18		14
	03-19		16
800-416	09-58		33

Number	Figure	Sequence	Ref.
800-416	09-59		33
800-4310	09-53		7
800-4311	06-30		14
800-4313	07-07		10
800-435	03-18		8
	03-19		10
800-437	09-20		25
800-439	09-19		52
800-4550	09-04		6
800-5135	09-50		13
804-20080	09-52		4
	09-55		33
	09-56		61
	09-57		11
	09-60		65
	09-61		42
805-12030	09-05		54
	09-53		11
806-10030	07-01		35
806-12035	09-48		45
806-6010	07-10		58
806-6020	09-08		19
806-8016	06-23		31
	07-10		11
80906C1	06-11		52
80907C1	06-08		29
	06-09		29
	06-12		36
	06-20		39
80909C1	06-18		10
810751C1	09-04		3
811-6030	03-16		29
	03-17		18
811-8025	02-01		17
813-10050	07-10		3
813-10130	06-38		12
813-16060	06-03		4
813-16110	07-06		2
814-10050	06-23		67
814-10075	08-03		33
814-10085	08-22		21
814-10090	07-16		5
	07-17		5
814-10140	08-22		19
	08-22		22
814-10150	08-14		2
	08-15		2
814-10205	08-22		23
814-12050	06-18		45
	06-45		19
814-12060	09-48		43
814-16080	06-03		70
	06-04		70
	06-05		70
814-16100	07-06		2
814-20070	04-22		12
814-6035	09-19		26
814-6100	04-34		2
814-8035	02-21		12
	02-22		12
814-8050	02-21		9
	02-22		9
	05-03		52
	05-03		64
	05-04		52
	05-04		64
	06-33		6
	08-01		21
	08-09		19
814-8055	05-04		64
	07-13		32
	07-14		24
	07-16		37
	07-17		38
	08-04		73
	08-05		73
814-8060	02-06		7
	08-01		22
	09-14		18
	09-39		4
814-8100	09-38		5
82001015	07-16		18
82001979	07-16		14
	07-17		14
82013836	04-22		24
82016630	07-20		1
82019639	05-07		15
82019684	05-07		14
82019693	05-07		16
82025708	05-07		9
82025709	05-07		10
82029752	07-08		30
	08-06		10
	08-14		42
	08-15		27
82030732	09-08		41
	09-08		41
824-1405	04-05		15
	04-17		14
	04-28		12
	04-29		20
825-1020	07-20		6
825-11414	05-01		3
825-1404	04-17		12
825-1408	04-23		17
825-2405	04-31		38
	04-35		9
825-2406	04-04		20
	04-26		11
	09-10		32
	09-11		6
	09-12		12
825-2408	02-01		10
	02-05		8
	02-10		10
	03-03		14
	03-18		12
	03-19		14
	03-20		52
	03-25		12
	04-04		19
	04-05		9
	04-06		3
	04-07		6
	04-24		21
	04-27		12
	05-01		21
	07-13		62
	07-14		73
	07-18		6
	09-06		5
	09-07		5
	09-08		4
	09-09		4
	09-10		22
	09-16		6
	09-26		57
	09-29		4
	09-39		48
	09-39		8
	09-40		11
	09-43		22
825-2410	02-05		6
	03-07		21
	03-13		4
	03-20		24
	03-20		28
	07-15		35
	07-19		12
	07-19		9
	07-20		3
	09-18		6
825-2416	02-09		5
825-51416	09-06		8
	09-07		8
825-5146	04-22		23
	04-34		4
825-5148	02-06		27
	04-01		3
	04-02		3
	04-22		5
	09-10		46
	09-39		57
	09-39		60
827-10050	09-58		58
	09-59		58
827-12050	09-50		19
	09-54		6
827-16070	09-06		7
	09-07		7

Number	Figure	Sequence	Ref.
827-16160	09-46		5
	09-47		5
827-20100	09-06		18
	09-07		18
827-20130	09-46		18
	09-47		18
	09-51		13
827-22080	06-46		2
	06-47		15
	06-47		2
827-22120	06-48		18
827-22130	06-48		10
	06-48		14
	06-48		6
827-22160	06-48		2
827-24100	09-04		19
827-24270	09-05		28
827-8035	09-37		3
828-10045	06-01		6
	06-01		7
	06-01		8
	06-24		3
	06-24		5
828-10070	07-10		30
	08-18		10
828-10110	08-18		10
	08-18		12
828-10160	08-18		10
	08-18		12
828-12045	02-08		7
	06-41		21
	06-41		57
	06-43		32
	06-44		32
828-12050	06-01		6
	06-01		7
	06-01		8
	06-32		22
	06-45		37
828-12080	06-41		56
	08-18		11
828-12085	06-45		38
828-12110	08-18		13
828-12120	08-18		11
828-12160	08-18		13
828-12170	08-18		11
828-16055	06-22		31
	09-14		2
828-16060	06-04		4
	06-05		4
	06-14		10
	06-14		11
	06-15		10
	06-15		11
	06-16		10
	06-16		11
	09-55		3
	09-56		56
	09-57		3
	09-60		62
	09-61		37
828-16070	06-15		15
	06-16		15
828-16080	06-03		4
	06-14		40
	06-15		40
	09-46		2
	09-47		2
	09-61		41
828-16085	06-14		9
	06-15		9
	06-16		9
	09-56		57
	09-60		63
828-16090	05-18		4
	05-19		5
	05-20		5
	06-03		4
	06-04		4
	06-05		6
	06-16		40
828-16110	06-14		12
828-16120	06-15		12
	06-16		12
828-16150	06-36		5
828-16150	06-37		5
828-16170	06-36		6
	06-37		6
828-20065	09-46		8
	09-47		8
828-20080	09-13		2
	09-56		60
	09-60		4
	09-61		40
828-20090	06-03		6
	06-04		6
	06-14		42
	06-15		42
828-20110	06-02		51
828-20150	06-02		62
	06-24		26
828-24120	09-48		6
828-24200	09-48		5
829-1306	03-07		17
829-1316	06-14		14
	06-15		14
	06-16		14
829-1406	04-05		25
	04-14		29
	04-21		6
	04-27		11
	07-07		21
	09-10		35
	09-41		30
	09-42		30
829-1408	02-01		46
	04-10		21
	04-33		8
	07-01		18
	07-02		12
	07-03		12
	07-04		12
	07-18		9
	08-01		23
	09-12		30
829-1410	02-01		15
	07-01		28
	07-16		7
	07-17		7
829-1412	04-19		4
	04-20		30
	04-20		40
	05-10		48
	05-11		48
	05-12		48
	09-10		19
829-1416	05-25		6
	05-25		6
	05-25		6
	05-25		6
	05-25		6
	05-25		6
	05-25		6
	05-25		6
	05-25		6
	05-25		6
	05-26		6
	05-26		6
	05-26		6
	05-26		6
	05-26		6
	05-26		6
	05-26		6
	05-26		6
	05-26		6
	09-03		14
	09-03		19
	09-03		24
	09-13		12
	09-14		12
829-1420	09-46		20
	09-47		20
829-1424	09-05		42
	09-05		47
	09-48		34
829-1436	09-04		16
829-1510	03-20		37
829-4312	09-10		19
829-4408	09-12		28

Number	Figure	Sequence	Ref.
829-4408	09-39		13
829-4436	09-05		64
832-10404	09-10		52
	09-35		36
832-10405	03-19		20
	06-30		19
	09-53		4
832-10406	03-16		31
	03-17		20
	09-35		37
	09-56		13
	09-60		11
	09-61		7
832-10408	02-01		49
	05-03		61
	05-04		61
	09-08		23
	09-15		7
	09-16		9
	09-25		3
	09-34		11
	09-35		11
	09-35		29
	09-36		8
	09-43		18
	09-53		9
832-10410	04-26		7
	04-28		22
	04-28		8
	04-29		12
	04-29		23
	04-29		35
	04-31		19
	04-31		9
	05-01		11
832-10412	04-30		13
	04-31		29
	09-48		44
	09-50		18
832-10416	09-46		6
	09-47		6
832-10420	09-06		20
	09-07		20
	09-51		15
832-10424	09-04		20
	09-48		27
832-44416	06-49		13
	06-49		3
	06-49		8
832-46404	03-16		26
	03-17		12
832-4748	09-15		23
833-40306	09-33		18
833-41308	09-08		11
	09-16		15
836-4065	02-34		2
	02-35		2
837-10020	06-32		3
837-12025	06-14		3
	06-15		3
	06-16		3
837-12030	06-03		2
	06-04		2
	06-05		2
837-16035	06-14		2
	06-15		2
	06-16		2
	06-32		2
837-16040	06-32		4
	06-36		2
	06-37		2
837-20040	06-02		3
837-8020	06-02		30
838-31055	09-61		20
838-3528	03-18		13
	03-19		15
	09-56		42
838-3540	09-05		66
838-3625	09-56		46
838-3630	09-56		27
	09-56		35
	09-60		47
	09-60		59
838-3640	09-05		9
	09-51		5
838-3826	06-34		8
	06-35		8
	09-60		37
838-5524	09-49		14
838-5620	09-49		15
838-5624	09-49		16
838-5836	09-58		49
	09-59		49
840-1410	06-31		16
840-1414	09-35		34
840-1510	04-18		5
840-1512	09-19		41
840-1516	04-05		12
	04-31		36
840-1525	09-44		27
840-1540	04-35		8
840-1550	03-19		21
	06-30		18
840-1612	04-29		6
	04-30		3
	04-35		13
	09-19		39
840-1620	09-09		6
840-168	09-08		24
840-1820	09-16		7
840-2616	09-33		4
843-2625	04-27		9
844-10016	07-14		48
	08-09		26
	08-14		32
844-10020	02-04		8
	02-05		5
	02-08		16
	03-03		23
	03-06		7
	03-07		23
	03-07		37
	07-13		53
	07-19		26
	07-20		14
844-10025	02-03		42
	03-05		12
	03-13		8
	04-35		2
	07-13		29
	07-14		21
	07-15		2
	07-18		2
844-10030	02-05		17
	03-20		25
	07-19		11
	07-20		2
844-10040	03-07		28
844-10050	02-11		11
	02-12		11
844-10080	02-11		20
	02-12		13
844-12020	07-16		21
	07-17		21
844-12025	02-01		26
	02-09		2
	02-10		8
	02-26		11
	02-27		11
	02-27		23
	02-28		10
	04-05		3
	05-06		4
844-12030	07-16		3
	07-17		3
844-12035	05-08		5
844-12060	05-06		2
844-12070	05-10		46
	05-11		46
	05-12		46
844-12150	04-17		4
844-6016	04-04		14
	09-12		37
844-6020	02-03		40
844-6025	03-02		19
	09-33		17
844-6035	09-10		31
844-8012	03-21		22
	03-23		18
	09-34		20

Number	Figure	Sequence	Ref.
844-8012	09-35		55
844-8016	02-01		31
	02-01		39
	02-01		50
	02-01		9
	02-06		4
	02-08		14
	08-01		4
	08-02		24
844-8020	02-03		12
	04-35		16
	04-35		4
	04-35		6
	07-13		51
	07-14		74
	07-14		88
	07-18		21
	07-19		7
	07-20		12
	08-02		9
	08-04		76
	08-05		76
	08-09		24
	08-11		29
	08-14		35
	09-10		21
	09-12		14
	09-12		16
	09-12		21
	09-12		9
	09-39		52
	09-40		15
844-8025	02-01		18
	02-10		9
	03-25		10
	07-13		63
	07-14		4
	07-14		76
	09-39		7
844-8030	02-05		7
	02-06		23
	02-16		11
	03-02		23
	07-15		5
	07-18		40
	07-19		23
844-8040	02-16		8
844-8045	05-03		48
	05-04		48
844-8060	07-14		49
	07-18		4
844-8080	07-16		19
	07-17		19
845-6015	02-25		8
	02-32		2
	02-33		2
	02-40		10
845-6020	02-25		9
845-6030	02-25		5
845-8016	02-13		7
	02-14		9
845-8020	02-17		7
	02-18		7
	02-36		33
	02-37		20
	02-37		25
	03-07		45
	03-13		6
	04-04		3
845-8025	02-31		13
	02-31		4
845-8045	03-07		29
845-8065	02-23		10
	02-24		10
845-8070	02-37		26
845-8080	03-01		5
845-8090	03-07		26
845-8095	07-18		27
84842C1	06-36		16
84986C1	06-20		18
854-10020	02-03		14
	03-13		10
854-10025	03-16		36
854-12035	02-10		11
	04-21		10
854-12035	09-12		5
854-12040	02-09		10
854-12065	02-09		8
854-16120	02-09		4
857-10075	03-20		23
	03-20		27
857-16110	06-49		12
	06-49		2
857-16180	06-49		7
861-10030	06-03		26
	06-03		26
	06-04		26
	06-05		26
861-10035	06-03		37
	06-04		37
	06-05		37
861-10045	06-14		37
	06-15		37
	06-16		37
	06-17		37
863-12150	06-32		23
863-6020	06-06		6
863-8020	05-10		50
	05-11		50
	05-12		50
	05-13		50
	05-14		50
	05-15		50
864-10055	06-26		11
	06-27		22
	06-28		18
	06-29		20
864-10080	07-08		18
	08-12		4
864-12025	09-55		30
	09-57		6
864-4012	03-16		53
	03-17		33
	04-14		47
	09-34		5
	09-35		5
864-4016	08-20		54
864-4020	03-17		23
864-4025	03-16		43
	04-14		48
864-4035	03-16		24
	03-17		11
864-4060	09-34		17
	09-35		52
864-5010	06-26		9
	06-27		20
	06-28		16
	06-29		18
864-6020	05-21		33
	05-22		33
864-6025	08-18		17
864-6030	09-14		27
864-6075	08-20		62
864-8016	08-04		52
	08-05		52
864-8020	08-04		42
	08-05		42
	08-08		57
864-8025	09-13		18
86597761	05-03		26
	05-04		26
86637711	02-08		22
868-10030	08-04		19
	08-05		19
868-10065	02-29		24
868-12035	08-04		12
	08-04		9
	08-05		12
	08-05		9
868-12040	04-19		2
	04-21		14
86975356	04-17		2
	04-18		34
86977726	05-10		16
	05-11		16
	05-12		16
	05-13		16
	05-14		16
	05-15		16
86980728	08-04		18

Number	Figure	Sequence	Ref.
86980728	08-05		18
86983465	09-60		22
86983466	09-60		19
86983667	04-02		15
	04-02		15
86983668	04-01		15
86983670	04-01		17
	04-02		17
86983809	05-06		39
86983810	05-06		22
86983811	05-06		10
86983812	05-06		38
86983821	05-06		1
86983862	05-06		7
86983866	02-08		15
86984029	09-11		12
86984032	09-11		14
86984040	09-11		13
86984088	09-44		22
86984110	05-06		63
86984122	06-27		8
86984134	09-61		16
86984136	09-61		19
86984137	09-61		17
86984195	09-61		15
86984198	02-10		3
86984247	08-06		9
86984258	04-09		1
86984484	07-16		23
	07-17		23
	07-19		14
86984486	07-18		35
86984487	03-19		1
86984626	09-56		24
	09-60		44
	09-61		23
86984629	09-56		33
	09-60		56
	09-61		21
86984632	09-56		30
	09-60		50
	09-61		27
86984635	09-56		21
	09-60		41
	09-61		25
86984638	09-56		23
	09-60		43
	09-61		24
86984640	09-56		29
	09-60		49
	09-61		26
86984642	09-61		28
86984643	09-61		18
86984822	09-44		30
86984827	09-44		
86984858	09-26		59
86984904	08-11		8
86985026	06-26		8
86985027	06-27		19
	06-28		15
	06-29		17
86985131	07-13		50
	07-14		35
86985133	07-13		17
	07-14		13
86985195	08-09		25
86985266	04-05		6
86985347	04-01		16
	04-02		16
86985588	07-02		25
	07-03		25
	07-04		25
86985589	07-03		37
86985634	06-35		6
86985788	07-14		46
86985790	07-14		44
86985916	09-56		37
	09-60		54
86985920	09-60		34
86985921	09-60		33
86985922	09-60		36
86985923	09-60		28
86985924	09-60		21
86985925	09-60		25
86985936	09-13		9

Number	Figure	Sequence	Ref.
86985936	09-14		9
86985941	07-19		13
86985942	07-19		19
86985943	07-18		18
86985944	07-18		16
86985945	07-18		37
86985946	07-18		22
86985947	07-18		25
86985948	07-18		34
86985949	07-18		33
86985950	07-19		20
86985951	07-16		33
	07-17		34
86985952	07-16		27
	07-17		27
86985953	07-19		15
86985954	07-19		17
86985955	07-16		29
	07-17		29
86985956	07-04		41
	07-18		36
86985957	07-16		24
	07-17		24
86985963	07-16		8
	07-17		8
86985965	07-16		9
	07-17		9
86985966	07-16		20
	07-17		20
86985983	07-18		10
86985993	07-16		2
	07-17		2
86987467	07-18		23
86987468	04-25		5
86987483	07-18		24
86987513	06-26		12
86987547	07-18		1
86987593	06-13		21
86987594	06-12		20
86987595	06-08		8
	06-09		8
86987596	06-18		21
86987597	06-13		24
	06-18		24
86987599	09-13		4
	09-14		4
86987609	06-13		35
86987610	06-18		11
86987612	06-18		12
86987851	09-60		35
86987852	09-60		27
86987853	09-60		24
86987854	09-60		26
86987855	09-60		18
86987856	09-60		23
86987857	09-60		20
86988005	09-56		38
	09-60		55
86988136	04-05		18
86988161	09-10		1
86988189	09-56		31
	09-60		60
86988211	09-56		34
	09-60		58
86988626	08-04		75
	08-05		75
86988656	06-06		14
	06-07		8
	06-17		35
86988829	08-06		7
86988838	05-03		62
	05-04		62
86988840	05-03		58
	05-04		58
86988918	08-06		11
86988933	07-03		30
	07-04		30
86989142	07-15		32
86989145	07-08		23
86989146	07-14		64
86989330	06-40		50
86989331	06-40		51
86989332	06-40		14
86989384	08-14		1
	08-27		

Number	Figure	Sequence	Ref.
86989388	06-26		4
	06-27		4
	06-28		4
	06-29		13
86989494	04-12		4
86989553	09-56		
86989554	09-56		1
86989555	09-56		
86989556	09-56		1
86989557	09-56		
86989558	09-56		
86989560	09-56		44
86989561	09-56		45
86989562	09-56		40
86989563	09-56		43
86989564	09-56		41
86989565	09-56		36
86989584	09-56		7
86989938	04-15		4
	04-16		4
86989939	04-15		18
	04-16		18
86989940	04-16		14
86989941	04-15		7
	04-16		7
	04-32		7
86989943	02-07		9
	04-13		6
86989945	04-14		52
86989947	04-14		8
86989948	04-14		16
86989949	04-14		53
86989950	04-14		15
86989951	04-14		54
86989953	04-15		9
	04-16		9
86989955	04-15		8
	04-16		8
86989957	04-13		3
86989960	04-14		20
86989962	04-15		6
	04-16		6
86989963	04-14		17
86989964	04-15		3
	04-16		3
86990119	09-11		3
	09-12		11
86990263	09-41		2
	09-42		2
86990264	04-12		8
86990266	09-41		60
	09-42		68
86990276	06-08		20
	06-09		20
	06-11		35
	06-12		31
	06-13		31
	06-18		31
	06-20		32
86990279	04-35		15
86990332	09-56		22
	09-60		42
86990333	09-56		2
86990388	08-27		5
86990406	04-14		19
86990446	05-06		16
86990447	05-06		27
86990448	09-56		48
86990465	09-56		8
86990663	09-42		69
86990793	04-14		45
86990822	02-29		
86990961	05-06		43
86990962	05-06		51
86990963	05-06		47
86990964	05-06		55
86991000	05-06		59
	08-09		22
86991001	05-06		60
86991007	05-06		62
86991009	05-06		61
86991153	07-15		39
86991154	07-16		22
	07-17		22
86991263	03-07		20

Number	Figure	Sequence	Ref.
86991263	03-13		3
86991302	07-03		32
86991384	07-13		1
86991568	06-11		21
86991719	09-26		56
86991728	04-30		8
86992392	08-20		
86992681	07-03		35
86992682	07-03		34
86992713	04-22		25
86992766	07-03		14
	07-04		14
86992767	07-03		15
	07-04		15
86992925	02-13		4
86993017	02-19		
86993028	02-17		10
86993060	02-36		
86993157	09-01		1
86993175	07-20		4
86993176	07-20		8
86993177	07-20		9
86993401	05-08		7
86993609	09-63		6
86993610	09-63		1
86993611	09-63		7
86993612	09-63		2
86993613	09-63		8
86993614	09-63		3
86993615	09-63		9
86993616	09-63		4
86993617	09-63		12
86993618	09-63		11
86993698	04-31		32
86993699	04-31		34
86993701	04-31		35
86993721	05-01		24
	06-31		
86994121	05-06		23
86994122	08-20		
86994167	03-01		1
	03-07		1
86994203	09-32		9
86994256	09-32		3
86994258	09-32		4
86994260	09-32		15
86994268	09-32		25
86994269	09-32		6
86994387	04-30		14
87010650	08-08		8
87012915	09-17		12
87014033	06-26		5
	06-27		5
	06-27		9
	06-28		5
	06-29		14
87016910	08-08		20
87309036	02-27		19
87400095	05-02		1
87400096	05-02		2
87400097	05-02		4
87400098	05-02		5
87400099	05-02		6
87400105	03-01		2
	03-14		3
87400183	04-04		21
87400188	04-04		6
87400196	05-08		1
87400202	05-08		3
87400216	06-24		11
87400218	05-08		6
87400219	05-08		6
87400220	05-08		6
87400235	04-04		22
87400261	04-22		20
87400262	02-37		
87401117	05-04		17
87401118	05-04		30
87401120	05-04		5
87401122	05-04		2
87401123	05-04		14
87401124	05-04		11
87401136	08-14		16
87401137	08-14		20
87401138	08-14		15

Number	Figure	Sequence	Ref.
87401139	07-14		65
87401232	05-25		
87401233	05-26		
87402304	05-25		1
	05-26		1
87402551	05-06		72
	07-13		64
	07-14		77
	08-14		28
87402632	08-14		31
87402730	05-18		36
	05-19		36
	05-20		36
87402747	08-14		41
	08-15		26
87402820	08-15		23
87402830	02-11		21
87402831	02-12		16
87403003	05-06		70
	07-13		67
	07-14		80
	08-14		36
87403339	04-01		18
	04-02		18
87403378	05-21		36
	05-22		36
87403379	05-21		37
	05-22		37
87403388	09-39		65
87403389	09-39		6
87403454	04-01		8
87403484	03-07		38
87403514	05-08		6
87403515	02-03		9
87403625	07-14		58
87403654	04-26		5
87403655	04-26		5
87403709	07-13		8
	07-14		6
87403710	07-13		24
87403711	07-13		44
	07-14		82
87403712	07-14		41
87403713	07-14		42
87403714	07-14		83
87403780	04-26		1
87403804	07-13		54
87403836	02-03		38
87403843	04-07		1
87403845	04-01		1
	04-02		1
87403848	04-35		14
87403935	04-26		2
87404055	05-18		
87404057	05-18		1
87404193	05-19		1
	05-20		1
87404234	04-04		16
	04-04		16
	04-04		16
87404246	05-10		1
	05-11		1
87404249	05-12		1
87404252	09-11		15
87404289	05-13		1
87404290	05-14		1
	05-15		1
87404446	07-15		26
87404448	07-15		27
87404466	05-19		8
	05-20		8
87404468	05-19		7A
	05-20		7A
87404469	05-19		56
	05-20		56
87404470	05-19		55
	05-20		55
87404471	05-19		65
	05-20		65
87404472	05-19		54
	05-20		54
87404473	05-19		64
	05-20		64
87404474	05-19		63
	05-20		63
87404477	05-19		7
	05-20		7
87404479	05-19		59
	05-20		59
87404480	05-19		66
	05-20		66
87404481	05-19		
	05-19		58
	05-20		
	05-20		58
87404485	05-19		6
	05-20		6
87404488	05-19		52
	05-20		52
87404489	05-19		57
	05-20		57
87404517	02-03		15
87404541	05-19		
	05-20		
87404542	05-20		
87404543	05-19		
87404545	05-19		
	05-20		
87404547	05-19		61
	05-20		61
87404548	05-19		62
	05-20		62
87404587	08-14		40
87404609	03-21		1
	03-23		1
87404610	03-21		2
	03-23		2
87404615	03-23		4
87404616	03-23		5
87404617	03-21		4
87404618	03-21		5
87404717	07-02		5
87404728	09-44		20
87404777	07-03		29
	07-04		29
87404840	02-03		41
87404993	05-10		40
	05-11		40
	05-12		40
	05-13		40
	05-14		40
	05-15		40
87404995	05-19		13
	05-20		13
87404996	05-19		14
	05-20		14
87404997	05-19		53
	05-20		53
87404998	05-19		12
	05-20		12
87404999	05-17		
87405000	05-17		
87405001	05-19		51
	05-20		51
87405002	05-19		60
	05-20		60
87405121	08-06		4
87405124	07-15		38
87405209	05-19		
	05-20		
87405211	05-17		1
87405212	05-17		1
87405392	02-19		
87405555	05-06		31
87405601	02-15		1
	02-17		8
87405636	04-15		14
87405664	09-41		62
87406275	04-05		1
87406276	04-06		1
87406303	04-22		15
87406430	05-09		1
87406431	05-09		7
87406432	05-09		4
87406433	05-09		43
87406434	05-09		2
87406435	05-09		5
87406436	05-09		23
87406437	05-09		29
87406438	05-09		40

Number	Figure	Sequence	Ref.
87406439	05-09		30
87406440	05-09		20
87406441	05-09		19
87406443	05-09		6
87406445	05-09		21
87406446	05-09		33
87406447	05-09		22
87406448	05-09		37
87406449	05-09		27
87406450	05-09		26
87406451	05-09		36
87406452	05-09		24
87406453	05-09		31
87406454	05-09		32
87406455	05-09		25
87406467	05-09		14
87406468	05-09		8
87406469	05-09		34
87406470	05-09		42
87406472	05-09		39
87406473	05-09		38
87406474	05-09		28
87406476	05-09		17
87406477	05-09		3
87406480	05-13		37
	05-14		37
	05-15		37
87406483	05-09		11
87406484	05-09		12
87406485	05-09		10
87406486	05-09		35
87406487	05-09		41
87406488	05-09		47
87406490	05-09		46
87406491	04-28		15
87406492	05-09		44
87406493	05-09		15
87406494	05-09		9
87406495	05-09		50
87406496	05-09		18
87406497	05-09		13
87406498	05-09		45
87406499	05-09		48
87406500	05-09		51
87406502	05-09		16
87406503	05-09		49
87406506	07-14		60
87406980	04-27		8
87407008	08-03		2
87407038	09-32		10
87407039	09-30		
87407042	09-30		1
87407043	09-30		2
87407044	09-30		1
87407045	09-30		2
87407046	09-30		14
87407047	09-32		11
87407048	09-30		31
87408291	04-09		2
87408510	08-20		64
87409160	02-27		26
	02-32		2
	02-33		2
87409357	07-14		66
87409564	02-11		15
	02-12		14
87409597	02-05		22
87410071	08-02		1
87410072	04-03		2
87410103	04-35		7
87410305	07-13		23
87410367	02-05		14
87410368	04-24		20
87410370	02-05		12
87410376	02-05		1
87410984	02-37		
87411129	08-20		66
87411718	07-19		10
87413188	04-35		5
	07-19		6
87413766	02-01		53
87413814	02-27		27
87413833	08-06		36
87413846	08-04		56
	08-05		56

Number	Figure	Sequence	Ref.
87413858	04-26		8
87413894	04-05		1
87414461	02-25		15
87414517	03-21		16
	03-22		16
87414567	04-02		15
	04-02		15
87414641	04-04		23
	04-04		23
87414866	09-41		33
	09-42		33
87415005	08-08		17
87415008	08-08		7
87415109	04-14		45
87415507	02-03		16
	02-36		22
	02-37		19
87415556I	02-01		54
87416046	09-40		25
87416065	04-04		16
	04-04		16
87416127	02-08		18
87416128	02-05		10
87416130	02-05		24
87416132	02-08		17
87416138	02-05		16
87416345	02-46		
87416820	08-20		
87417755	02-05		19
87418143	04-27		13
87418273	04-27		25
87419306	04-27		14
87421281	09-40		28
87422017	04-14		52
87422106	06-14		43
	06-15		43
	06-16		43
87423387	07-03		5
	07-04		5
87423671	08-21		
87424307	04-22		25
87424932	06-04		34
	06-05		34
87425480	09-24		25
87425759	02-05		20
87426752	02-05		18
87427329	06-40		41
87427330	06-40		38
87427769	08-16		28
87427813	09-06		6
	09-07		6
87427814	09-06		11
	09-07		11
87427822	08-01		29
	08-03		32
	08-16		
87428093	04-04		24
	04-04		24
87429247	08-19		22
87429249	08-04		4
87429252	08-05		4
87429483	08-04		5
	08-05		5
87429524	09-40		24
87429567	06-05		1
87429902	09-42		15
87429903	09-41		15
87430152	08-21		
87430368	09-45		8
87430369	09-45		1
87430370	09-45		6
87430371	09-45		7
87430372	09-45		2
87430373	09-45		3
87430374	09-45		4
87430375	09-45		5
87430951	09-14		25
87432129	07-02		22
	07-03		22
	07-04		22
87432130	07-02		21
	07-03		21
	07-04		21
87432131	07-02		7
	07-03		7

Number	Figure	Sequence	Ref.
87432325	08-16		29
87432348	04-27		2
87432354	04-27		21
87432474	06-16		1
87432783	06-16		38
87433173	09-17		1
87433368	04-27		
87433653	06-03		19
	06-04		19
	06-05		19
	06-06		
	07-11		14
	07-12		14
87433655	06-03		18
	06-04		18
	06-05		18
87435072	05-07		11
87435206	09-32		27
87435416	03-21		23
	03-22		23
	03-23		19
	03-24		23
87435455	09-14		17
87435691	04-27		17
87435703	07-12		1
87435704	04-27		20
87435948	06-03		1
	06-04		1
87436828	02-27		28
	02-32		3
	02-33		3
87437056	02-17		11
	02-18		11
87437060	02-32		4A
	02-33		4A
87437062	02-32		1
	02-33		1
87437191	05-07		5
87437192	05-07		6
87437273	09-39		45
87437896	05-07		4
87438800	08-04		20
87438801	08-05		20
87439034	09-40		25
87439776	05-07		2
87440038	07-12		3
87440347	07-02		21
	07-03		21
	07-04		21
87440465	09-32		20
87440524	05-10		10
	05-11		10
	05-13		10
	05-14		10
87440529	05-12		10
	05-15		10
87440642	05-04		8
87440741	08-07		11
87440895	03-11		
87440896	03-11		
87441257	08-10		9
87441298	08-19		32
87441634	08-27		6
87441877	04-22		15
87441878	04-05		1
87442147	04-07		1
87442165	08-14		1
	08-27		
87442166	07-05		13
87442167	07-02		1
	07-03		1
	07-04		1
	07-05		
87442169	09-25		7
87442170	09-44		30
87442171	09-44		
87442224	03-11		
87443735	04-14		35
87444943	09-44		1
87444946	09-26		10
87444975	06-04		35
	06-05		35
	06-07		
87444976	06-07		1
87445066	06-26		10

Number	Figure	Sequence	Ref.
87445066	06-27		21
	06-28		17
	06-29		19
87445145	05-05		2
87445830	06-15		1
87446665	08-07		18
87447003	03-24		4
87447004	03-24		5
87447844	04-27		6
87448793	03-05		24
87449707	05-04		25
87452966	05-22		2
87452967	05-21		2
87455737	05-12		32
	05-15		32
87455739	05-12		31
	05-15		31
87455741	05-12		25
	05-15		25
87455742	05-12		20
	05-15		20
87455743	05-12		26
	05-15		26
87455748	05-12		
	05-12		
	05-15		
	05-15		
87455775	05-10		32
	05-11		32
	05-13		32
	05-14		32
87455776	05-10		31
	05-11		31
	05-13		31
	05-14		31
87455777	05-10		25
	05-11		25
	05-13		25
	05-14		25
87455778	05-10		20
	05-11		20
	05-13		20
	05-14		20
87455779	05-10		26
	05-11		26
	05-13		26
	05-14		26
87455780	05-10		
	05-10		
	05-11		
	05-11		
	05-13		
	05-13		
	05-14		
	05-14		
87455806	05-10		23
	05-10		30
	05-11		23
	05-11		30
	05-12		23
	05-12		30
	05-13		23
	05-13		30
	05-14		23
	05-14		30
	05-15		23
	05-15		30
87455807	05-10		24
	05-10		29
	05-11		24
	05-11		29
	05-12		24
	05-12		29
	05-13		24
	05-13		29
	05-14		24
	05-14		29
	05-15		24
	05-15		29
877-11010	06-23		2
877-31212	06-39		6
	06-40		6
	09-56		49
878-10612	09-60		32
878-1066	04-32		6

Number	Figure	Sequence	Ref.
892-11004	03-17		24
	04-17		11
	06-31		17
	08-20		53
892-11005	04-05		14
	04-17		13
	04-19		7
	04-31		37
892-11006	03-07		16
	03-16		30
	03-16		40
	03-17		19
	04-21		5
	04-23		10
	04-27		10
	09-08		42
	09-19		25
	09-41		25
	09-42		25
892-11008	04-23		16
	09-41		27
	09-41		52
	09-42		27
	09-42		57
892-11010	06-02		54
	09-10		28
892-11012	04-19		5
	04-20		32
	06-32		44
	09-34		9
	09-35		9
	09-46		14
	09-47		14
892-14008	09-36		3
893-11008	04-10		20
	04-33		7
895-11003	09-24		14
	09-26		43
	09-27		28
895-11004	03-16		25
	03-17		34
	09-35		35
895-11005	03-18		7
	03-19		9
	04-05		13
	04-25		29
	04-29		19
	09-19		37
895-11006	03-07		15
	03-18		15
	03-19		17
	04-34		3
	06-45		44
	07-07		27
	09-15		8
	09-19		61
	09-35		32
	09-42		54
895-11008	02-01		34
	02-21		6
	02-22		6
	04-24		10
	07-07		3
	07-13		27
	07-14		19
	08-04		41
	08-04		49
	08-05		41
	08-05		49
	08-08		58
	09-16		14
	09-22		17
	09-22		7
	09-37		2
	09-38		6
895-11010	04-17		16
	05-01		22
	06-44		6
	07-07		23
	07-16		6
	07-17		6
	07-18		13
	09-23		19
	09-24		43
	09-38		8
895-11012	03-18		10
	03-19		12
	07-07		15
895-11014	05-01		4
895-11018	06-30		10
895-11020	04-23		13
	09-06		19
	09-07		19
895-15006	04-30		4
	09-08		20
	09-09		7
	09-15		21
895-15008	02-01		47
	02-02		6
	05-03		51
	05-04		51
	06-33		7
	08-01		24
	08-01		28
	08-09		20
	09-08		10
	09-08		22
	09-08		3
	09-09		3
	09-12		22
	09-13		20
	09-14		20
	09-19		11
	09-35		28
895-15010	02-01		14
	02-05		9
895-15012	09-34		10
	09-35		10
895-18010	04-28		21
	04-28		7
	04-29		11
	04-29		36
	04-31		18
	04-31		8
	07-01		36
	07-07		11
	08-06		40
	09-19		51
895-25005	02-04		21
895-25008	09-25		2
895-30108	09-10		51
896-11006	03-16		39
	04-21		4
896-11010	09-05		25
	09-58		59
	09-59		59
896-11012	04-19		3
	04-21		15
	04-22		17
	04-30		12
	04-31		28
	09-53		12
896-11014	05-10		13
	05-10		17
	05-11		13
	05-11		17
	05-12		13
	05-12		17
	05-13		13
	05-13		17
	05-14		13
	05-14		17
	05-15		13
	05-15		17
	09-56		25
	09-60		45
896-11016	05-25		5
	05-25		5
	05-25		5
	05-25		5
	05-25		5
	05-25		5
	05-25		5
	05-25		5
	05-25		5
	05-25		5
	05-26		5
	05-26		5
	05-26		5
	05-26		5

Number	Figure	Sequence	Ref.	Number	Figure	Sequence	Ref.
896-11016	05-26		5	92561C1	06-19		14
	05-26		5	92562C1	06-19		12
	05-26		5		06-23		11
	05-26		5	92687C1	06-36		22
	05-26		5	92689C1	06-36		21
	05-26		5	92718C2	06-22		12
	06-03		5	92793C1	06-09		37
	06-04		5	92795C1	06-11		51
	06-05		5	92821C2	06-14		39
	06-22		30		06-15		39
	09-13		5		06-16		39
	09-14		5	92824C1	06-11		20
896-11020	04-22		13	92825C1	06-11		3
	09-18		3		06-21		2
	09-46		21	92828C1	06-11		11
	09-47		21	92905C1	06-22		8
	09-51		14	92906C1	06-22		13
896-11024	09-05		43	92907C1	06-22		14
	09-05		48	92915C1	06-22		56
	09-05		50	92934C2	06-08		21
896-12010	06-38		13		06-09		21
896-12012	06-01		3		06-11		36
	06-43		28		06-12		32
	06-45		39		06-13		32
896-12016	05-18		3		06-18		32
	05-19		4		06-20		33
	05-20		4	93103C1	06-03		40
	06-03		71		06-04		40
	06-04		71		06-05		40
	06-05		7		08-07		19
	06-05		71	93105C1	06-02		55
	06-14		13		06-03		50
	06-15		13		06-04		50
	06-16		13		06-05		50
	06-36		23		08-07		12
	06-37		23		08-07		8
	07-10		31		08-08		41
	09-14		3	93136C2	06-19		18
	09-46		3	93137C1	06-19		13
	09-47		3	93138C1	06-19		11
	09-55		4		06-23		12
	09-56		58	93199C1	04-25		8
	09-57		4		09-10		17
	09-60		64		09-26		22
	09-61		38		09-26		5
896-12020	06-02		63		09-27		13
	06-03		7	93201C1	06-23		33
	06-04		7	93269C1	06-20		40
	06-14		41	93297C1	06-08		30
	06-15		41		06-09		30
	06-24		27	93316C1	06-38		10
	09-13		3	93329C2	08-23		6
896-15008	09-12		29	93330C1	08-23		7
896-15012	09-05		55	933321R1	07-17		33
	09-12		42	93332C1	08-23		13
	09-48		42	93350C1	06-08		9
	09-50		23		06-09		9
896-15020	04-26		3		06-11		39
896-16012	08-03		5		06-12		18
	08-04		10		06-13		18
	08-05		10		06-18		19
896-16016	09-03		13		06-40		8
	09-03		18	933608R1	07-15		15
	09-03		23	93364C1	06-14		20
896-16036	09-04		17		06-15		20
897123H2	07-16		32		06-16		20
	07-17		32	933801R91	09-05		56
897278H1	09-13		11	933967R1	02-48		5
	09-14		11	93410C2	06-14		38
897502H1	07-15		14		06-15		38
905-10020	03-20		17	94547C1	06-36		
905-6012	04-22		22	94616C2	06-21		1
905974R1	06-31		18	94651C2	06-34		10
906028R1	09-58		61	94652C3	06-34		11
	09-59		61	94661C1	06-21		13
906045R1	07-01		4	94662C1	06-21		13
91967C1	04-25		35	94663C1	06-21		13
	04-26		6	94664C1	06-21		13
92100C2	04-15		12	94666C1	06-21		12
92115C2	04-15		16	96814C3	09-16		8
	04-16		16	96900C1	09-26		55
921683C1	06-21		8	96901C1	04-29		10
921684C1	06-21		6	97006C1	03-07		47
92190C1	04-29			9804279	02-01		36
92555C1	06-19		22		02-10		5

Number	Figure	Sequence	Ref.
9804279	04-17		5
	05-06		5
	09-06		10
	09-07		10
9845783	09-32		26
A145069	02-07		6
A149932	02-07		3
A169433	03-22		12
	03-25		13
	08-02		23
A170241	02-03		11
A170807	02-08		10
A172900	02-07		4
A184547	02-01		12
A184597	09-43		16
A186004	04-05		21
	06-41		61
A186194	04-18		17
A186256	04-23		1
A187504	04-18		12
A189007	09-64		3
A20058	05-25		10
	05-26		10
A39888	04-14		10
	04-14		22
A47130	04-20		43
A47230	04-20		
A47232	04-20		22
A47235	04-20		24
A47236	04-20		25
A49667	09-38		3
A49805	04-20		26
A49806	04-20		18
A49807	04-20		36
A49808	04-20		37
A49809	04-20		34
A49810	04-20		23
A54021	06-39		8
A54022	06-39		9
A59457	09-34		19
	09-35		54
A63171	06-22		25
A63219	06-47		10
	06-47		21
A63399	07-05		5
A67295	03-16		9
A67327	06-41		32
A67328	06-41		31
A75210	06-18		37
A75211	06-18		36
A75815	03-16		14
	03-18		20
A77428	02-30		36
A77429	02-30		35
A77470	03-04		6A
A77505	02-30		34
A77506	02-36		4
	02-37		4
A77538	02-27		22
A77541	02-23		7
	02-24		7
A77546	03-06		5
A77552	02-30		10
A77563	02-38		2
	02-39		2
	02-42		14
	02-43		14
A77564	02-42		14
	02-43		14
A77565	02-42		14
	02-43		14
A77566	02-42		14
	02-43		14
A77567	02-42		14
	02-43		14
A77586	02-36		3
	02-37		3
A77590	02-30		11
A77623	02-31		1
A77645	02-36		25
	02-37		27
A77720	03-07		2
A77722	02-23		3
	02-24		3
A77724	02-23		16

Number	Figure	Sequence	Ref.
A77724	02-24		16
	02-47		23
A77782	02-29		6
A77790	02-40		14
A77808	02-40		19
A77810	02-40		28
A77901	02-39		1
	02-43		
A77902	02-29		28
	02-30		28
A77928	03-08		4
	03-12		
A77932	03-08		
A77966	03-09		
A77968	03-09		
A77970	02-39		1
	02-43		
A77972	03-10		
A77981	02-47		
A77999	02-38		8
	02-39		8
A78003	02-49		
A78018	02-38		6
	02-39		6
	02-45		
A78019	02-39		
A78020	02-37		
	02-39		
A78037	02-22		14
A78038	02-38		1
	02-42		
A78039	02-36		
	02-38		
A78041	02-36		
A78042	02-44		
A78043	02-48		
BMF31G	04-22		1
D136773	07-18		11
D142327	02-11		18
	02-12		17
D63322	06-20		3
D71346	04-08		12
	09-23		13
	09-24		48
D95146	08-24		4
	08-25		4
	08-26		4
D95748	09-05		24
E135040	07-15		6
E35556	04-08		8
	09-24		50
F19478	06-23		76
G100711	08-24		13
G103862	08-20		16
G108723	08-16		22
	08-20		19
	08-27		11
G108727	08-20		27
G108868	08-16		
	08-19		
G109228	08-24		7
	08-25		7
	08-26		7
G109299	08-25		6
G32126	08-24		6
G32303	08-24		15
	08-25		15
	08-26		15
G35540	08-16		16
	08-19		9
	08-27		17
H136416	05-18		23
	05-19		25
	05-20		25
H224501	05-18		38
	05-19		38
	05-20		38
H40556	04-29		18
H758326	05-18		35
	05-19		35
	05-20		35
J008465	02-06		12
J069053	02-06		13
J100304	02-31		11
J146483	03-10		12

Number	Figure	Sequence	Ref.
J282159	02-17		16
	02-18		16
J282433	02-11		16
	02-12		15
J282942	03-01		13
	03-01		17
J286499	02-17		14
	02-18		14
J3066914	03-10		16
J329289	03-06		8
J329899	03-12		2
J330081	02-49		7
	03-12		3
J330202	02-47		29
	02-49		8
	04-04		5
	04-04		7
J330252	03-12		4
J330478	02-49		9
	04-04		13
J330644	03-11		9
J331002	03-09		24
J347925	03-09		18
J347941	03-11		6
J348448	03-12		6
J348747	04-04		4
J348757	03-11		11
J4001869	03-09		39
J4002006	03-02		28
	03-08		14
J4002064	04-04		12
J4002104	03-11		12
J4009898	03-11		16
J4009979	03-10		9
J4010051	03-08		18
J4010084	03-08		19
J4010174	03-02		25
	03-08		10
J4010269	03-08		3
	03-11		
J4010544	03-09		
J4010636	03-09		16
	03-12		5
J4025130	03-09		
J4025319	03-08		1
	03-09		
J4063496	02-23		18
	02-46		8
J4076375	03-09		42
J4076442	03-02		1
	03-08		
	03-23		9
J408345	04-04		8
J4089074	03-08		2
	03-10		
J417071	03-12		8
J417095	03-09		22
J417161	03-09		21
J503533	02-19		20
J519807	02-18		6
J528010	02-19		19
J528121	02-22		13
J528177	02-21		2
	02-22		2
J528221	02-21		5
	02-22		5
J532195	02-21		7
	02-22		7
J532196	02-21		8
	02-22		8
J532671	02-21		10
	02-22		10
J533163	02-19		21
	02-20		21
J534309	02-20		22
J535243	02-19		18
J535324	02-19		1
J537960	02-20		18
J537979	02-20		19
J575169	02-19		
	02-20		
J591196	02-20		1
J592050	02-21		4
	02-22		4
J593678	02-21		1
J594348	02-22		1
J597308	02-19		22
J606653	03-06		17
J678603	02-17		18
	02-18		18
	02-49		10
	03-10		8
J678610	03-10		7
J678912	02-36		20
	02-47		28
	02-49		11
	03-05		20
	04-04		11
	04-04		9
J678921	02-36		19
	03-05		19
J678923	02-30		2
	02-36		11
	02-37		11
	03-05		9
	03-06		2
	03-11		13
	03-12		9
J678925	03-11		14
	03-12		10
	03-12		7
J70700	03-10		11
J755843	02-17		6
	02-44		4
	02-48		12
J759917	02-19		17
	02-20		17
J800316	02-43		
J800320	02-43		
J800332	02-37		
J800426	02-20		
J800867	03-11		
J800909	03-11		
J802263	02-42		
J802429	02-42		5
	02-43		5
J802538	02-43		5
J804927	02-11		
	02-12		
J818823	02-17		3
	02-18		3
J818824	02-17		4
	02-18		4
J823494	02-13		3
	02-14		5
J823921	02-44		19
	02-45		14
J865346	04-04		10
J867043	02-45		1
	02-49		12
	03-02		22
	03-09		20
J867480	03-10		28
	03-11		8
J867640	03-09		17
	03-12		11
J867641	03-10		6
	03-12		12
J867642	03-10		5
	03-12		13
J867645	03-10		15
	03-11		7
J867724	03-11		21
J883284	02-06		11
	02-49		13
J900227	02-34		5
	02-35		8
J900250	02-30		4
J900257	02-13		9
	02-14		12
	02-36		13
	02-37		13
J900269	02-41		4
J900589	03-07		30
J900677	02-25		2
J900955	02-30		12
J901177	02-29		13
J901383	02-42		
	02-43		
J901395	02-41		3

Number	Figure	Sequence	Ref.
J901693	02-29		23
J901717	02-29		26
J901846	02-36		14
	02-37		14
J902425	02-29		12
	02-48		7
	03-03		4
J902466	02-26		7
	02-27		7
J902468	02-26		6
	02-27		6
J903035	03-03		8
	03-05		15
J903293	03-04		5
J903380	02-44		12
	02-48		8
	03-01		21
	03-14		2
J903463	02-13		10
	02-14		14
J903475	02-13		11
	02-14		13
	02-46		1
	02-47		1
	02-48		9
	07-15		22
J903924	02-13		18
J904483	02-40		3
J904519	03-02		5
J904711	03-02		6
J905031	02-41		2
J905194	02-29		21
J905307	03-01		22
J905401	02-36		5
	02-37		5
J905408	02-36		23
J905449	02-26		3
	02-27		3
	02-44		9
J905870	02-29		22
J906100	02-29		31
J906216	02-25		11
J906440	02-26		10
	02-27		10
J906619	02-23		2
	02-24		2
J906694	03-04		3
J906695	03-04		4
J906733	02-40		6
J907177	02-36		16
	02-37		16
	02-42		2
	02-43		2
	02-46		13
	02-47		2
J907206	02-29		32
J907555	02-30		13
J907741	02-27		20
J907769	02-11		6
J907860	02-23		19
	02-24		19
	02-25		14
J907861	02-26		9
J907998	02-13		17
J909310	03-04		17
	03-13		7
J909886	02-44		11
	02-48		10
	03-01		3
	03-14		1
J910248	02-09		12
J910279	03-01		4
J910517	02-48		11
J910739	02-11		9
J910824	02-26		4
	02-27		4
	02-44		10
J911446	03-04		11
J911901	02-26		13
	02-27		13
J911924	02-11		10
J911925	02-26		14
	02-27		14
J911941	02-17		2
	02-49		15
J912072	02-27		21
J912473	02-46		11
	02-48		13
	02-49		16
J912888	03-07		4
J912900	02-29		1A
J912976	02-29		15
J913112	02-36		36
	02-37		37
J913990	02-42		11
	02-43		11
J913994	02-13		19
	02-46		14
J914301	02-40		9
	02-46		6
	02-47		4
J914302	02-25		6
	02-47		5
J914310	02-44		1
J914462	02-12		12
J914708	02-15		4
	02-44		18
J914711	03-04		24
J915490	02-11		17
J915772	02-13		16
	02-46		3
J915800	07-15		23
J916284	02-48		15
J916361	03-04		20
J916369	02-36		7
	02-37		7
J916779	03-03		19
J917728	02-29		19
	02-30		20
J917729	02-29		19
J917746	03-01		14
	03-02		7
J917747	03-01		11
	03-02		8
J917892	02-06		22
	02-45		15
	02-49		17
J918002	03-02		26
	03-03		21
	03-08		12
J918113	02-40		13
	02-40		18
J918174	02-23		14
	02-24		14
	02-46		7
	02-47		6
J918175	02-23		13
	02-24		13
J918188	02-48		16
	03-01		25
J918190	02-48		17
	03-03		22
J918192	02-48		18
	03-02		29
	03-02		31
	03-04		13
	03-07		6
	03-08		13
J918215	07-15		17
J918334	02-23		1
	02-24		1
J918539	03-04		18
J918685	02-06		10
J918776	02-40		2
J918777	02-34		4
J918779	02-44		2
	02-44		2
	02-48		19
J918986	02-40		1
J919359	03-02		9
J919369	02-18		2
	02-45		2
	02-49		18
J919435	02-29		30
J919562	02-23		11
	02-24		11
J919622	03-01		12
J919677	02-29		25
	02-44		17
J919683	02-13		15

Number	Figure	Sequence	Ref.
J920400	02-25		16
J920443	02-29		5
	02-36		32
	02-37		32
J920595	03-01		23
J920622	03-07		35
J920706	02-18		20
	02-30		14
	02-36		2
	02-37		2
J920773	02-25		18
J920854	03-01		9
	03-02		12
J920921	03-07		13
J920922	03-07		12
J921357	03-07		24
J921444	02-29		18
J921594	03-03		3
J921605	02-23		12
	02-24		12
	02-47		7
J921816	02-13		23
J922639	02-26		5
	02-27		5
J922789	02-17		17
	02-18		17
J923044	02-11		7
J923261	02-44		14
	02-48		21
J923478	02-34		1
J923564	02-29		2
J923887	03-07		44
J924147	02-25		17
J924148	02-29		11
	03-03		1
J924445	02-42		9A
	02-43		9A
J924446	02-42		9A
	02-43		9A
J924447	02-42		9A
	02-43		9A
J924448	02-42		9A
	02-43		9A
J924449	02-42		9A
	02-43		9A
J924492	02-29		17
J924582	02-29		3
J924605	02-46		9
	02-48		22
	03-07		31
J924725	03-02		32
	03-04		14
J924726	03-01		24
J924987	02-40		23
J925171	03-07		42
J925468	02-29		3
J925470	02-29		3
J925570	02-40		5
J925955	03-04		6
J926044	02-15		5
	02-17		13
J926048	02-36		17
	02-37		17
	02-47		8
J926273	03-07		25
J926593	03-12		14
J926722	02-46		16
	02-47		9
	03-07		19
	03-13		2
J926781	03-07		27
J926846	02-13		8
	02-14		10
J926855	02-11		12
J926863	02-13		6
	02-14		8
J926865	02-25		4
J927155	02-34		3
J927611	02-25		7
J927642	02-29		16
	02-29		16A
	02-44		3
J928031	02-36		18
	02-37		18
J928828	02-25		3
J928870	02-42		12
	02-43		12
J928981	03-07		3
J929005	02-29		4
J929006	02-29		4
J929007	02-29		4
J929011	02-24		18
	02-47		10
J929012	02-44		5
J929322	03-07		7
J929537	02-15		3
J930375	03-04		22
J930391	03-01		6
J930392	03-01		7
J930393	03-01		8
J930394	03-01		18
J930395	03-01		19
J930396	03-01		20
J930683	03-07		46
J930688	03-02		13
J930766	03-04		9
J930789	03-03		5
J930827	02-27		17
	02-44		16
J930903	02-26		2
	02-27		2
J930911	02-23		9
	02-24		9
	02-47		11
J930942	03-04		7
J931014	03-05		1
J931016	02-12		10
J931063	03-04		8
J931084	02-23		8
	02-24		8
J931380	03-07		18
J931623	02-29		20
J932063	02-15		2
	02-48		25
J932096	03-07		5
J933347	02-25		12
J933384	02-40		8
J933440	02-12		9
J933441	02-12		7
J934046	02-38		3
	02-39		3
	02-42		9
	02-43		9
J934054	02-11		4
	02-12		4
J934104	02-12		6
J934159	02-23		17
	02-24		17
J934410	02-23		
	02-24		
J934480	02-36		24
J934481	02-37		28
J934486	02-40		24
J934838	02-41		1
J934864	02-42		13
	02-43		13
J935113	02-27		15
J935170	03-02		27
	03-08		11
J935171	02-47		30
	02-48		26
	02-49		20
	03-03		10
	03-04		10
	03-04		19
	03-05		16
J935586	02-26		8
	02-27		8
J935612	03-03		25
J935740	03-07		34
J936058	02-36		6
	02-37		6
J936180	02-29		1
J936236	04-04		2
J936315	03-04		1
J936316	03-04		15
J936331	02-27		16
J936365	02-23		5
	02-24		5
J936993	02-15		6

Number	Figure	Sequence	Ref.
J936993	02-44		6
	02-48		14
J937142	02-45		3
	02-49		14
	03-14		11
	03-15		3
J937367	02-31		5
	02-47		13
J937417	02-36		26
J937438	02-29		27
J937477	02-16		2
	02-18		9
J937479	02-16		3
	02-45		6
	02-49		21
J937613	02-27		18
J937652	02-32		1
	02-33		1
J937706	02-44		7
	02-45		5
	02-48		6
	02-49		6
J937759	02-37		23
J938036	02-15		7
J938056	03-03		15
J938077	02-13		22
	02-14		4
J938091	03-07		22
J938160	02-25		13
J938163	02-35		1
J938267	02-26		8
	02-27		8
	02-29		18A
J938383	03-01		1
	03-07		1
J938445	02-28		2
J938467	03-07		36
J938655	02-46		4
J939258	02-37		24
	02-46		10
	02-47		12
	02-48		23
	02-49		19
	03-04		16
J939284	02-28		5
	02-45		7
J939299	02-37		1
J939313	02-36		1
J939570	03-04		12
J939837	03-01		2
	03-14		3
J940152	02-30		15
J940153	02-30		16
J940632	02-31		14
J940639	03-02		18
J940817	03-02		20
J941137	02-30		24
J941140	02-30		25
J941786	02-13		21
	02-14		2
J942588	02-30		5
J942589	02-30		6
J942748	02-30		
J942749	02-30		
J942764	03-13		1
J942896	02-11		5
J943366	02-28		6
	02-30		19
	02-38		7
	02-39		7
J943440	03-13		5
J943442	03-06		21
J943445	02-30		21
J943503	03-02		33
J943599	03-05		14
J943613	02-16		9
	02-18		13
J943738	02-31		3
J943739	02-31		6
J943740	02-31		7
J943808	02-36		29
	02-37		29
J943841	02-16		1
	02-18		8
J943885	02-13		12
J943885	02-14		11
J943888	02-30		7
	02-45		8
J943933	02-30		23
J944001	02-35		3
J944110	04-04		17
J944125	04-04		1
J944174	02-30		22
J944239	02-28		7
J944290	02-27		9
	02-28		9
J944293	02-13		5
	02-14		7
	02-46		2
	02-47		15
J944298	02-35		4
J944342	02-16		6
J944382	03-05		23
J944429	02-31		12
J944452	02-30		8
J944454	02-31		10
J944464	02-24		13
J944510	02-37		23B
J944593	02-16		5
J944646	02-16		7
	02-45		9
	02-49		22
J944647	02-16		10
	02-45		10
	02-49		23
J944683	02-32		3
	02-33		3
	02-46		15
	02-47		17
	02-49		24
J944686	03-02		2
J944688	03-02		14
J944690	03-02		3
J944692	03-02		15
J944694	03-02		4
J944696	03-02		16
J944698	03-02		17
J944699	03-02		10
J944711	02-30		9
J944714	02-32		5
	02-33		5
J944717	03-02		11
J944720	02-36		22
	02-37		19
J944823	03-05		7
J944825	03-05		17
J944833	03-02		21
J944845	03-06		4
J944869	03-02		30
J944987	03-06		1
J944988	03-06		22
J945022	02-30		1
J945108	02-18		10
J945212	03-03		20
J945252	02-16		4
J945329	02-34		6
	02-35		9
	02-36		8
	02-37		8
J945330	02-12		
J945603	02-36		21
	02-37		21
	02-47		26
	02-47		3
J945852	02-14		6
J945866	02-30		33
J945922	02-40		12
J945923	02-40		12
J945924	02-40		12
J945925	02-40		12
J945926	02-40		12
J945927	02-40		12
J945928	02-40		12
J945929	02-38		5
	02-39		5
	02-40		12
J945930	02-38		4
	02-39		4
	02-40		11
J945931	02-40		11

Number	Figure	Sequence	Ref.
J945932	02-40		11
J945933	02-40		11
J945934	02-40		11
J945967	02-23		6
	02-24		6
J948043	02-13		1
	02-14		1
J948068	02-32		4
	02-33		4
J948072	02-25		1
J948079	02-17		11
	02-18		11
J948095	02-42		1
	02-43		1
J948102	02-30		18
J948529	03-02		24
	03-15		1
J948583	02-30		
J949093	03-05		11
J990876	02-28		3
	02-45		4
J990881	02-48		20
	03-03		9
J991038	03-03		26
J991067	02-30		29
J991085	02-29		14
J991108	03-13		9
J991275	03-01		10
J991276	03-01		16
J991277	03-01		15
J991308	02-37		
J991309	02-37		
J991512	03-03		7
JC4025319	03-09		
JR4025319	03-09		
K303756	09-20		20
	09-20		6
K307050	04-24		18
K620185	06-08		36
	06-09		36
	06-11		54
	06-12		40
	06-13		40
	06-20		21
L112087	04-23		14
L112090	04-23		6
L11541	04-05		4
	04-27		18
	04-30		9
	06-33		13
	07-07		9
	08-06		37
L127093	02-03		18
L18331	03-21		24
	03-22		24
	03-23		20
	03-24		24
L18337	03-16		45
	03-19		2
	04-01		24
	04-02		19
	04-32		8
	04-34		5
L31698	05-22		3
L33289	06-09		52
L33732	05-21		4
L33737	05-21		9
L40315	03-16		15
	03-18		21
L53928	03-07		39
N14112	04-23		8
N8356	04-23		9
N8358	04-23		7
N8359	04-23		2
N8360	04-23		4
N8361	04-23		5
N8362	04-23		3
NS	02-36		
	02-36		
	02-37		
	05-06		14
	05-07		1
	05-07		2
NSS	02-01		16
	02-01		19
NSS	02-01		6
	02-02		1
	02-03		26
	02-03		27
	02-03		30
	02-03		33
	02-04		1
	02-11		1
	02-11		2
	02-12		1
	02-12		2
	02-12		5
	02-13		2
	02-14		3
	02-19		1
	02-19		10
	02-19		11
	02-19		12
	02-19		13
	02-19		14
	02-19		15
	02-19		16
	02-19		2
	02-19		3
	02-19		4
	02-19		5
	02-19		6
	02-19		7
	02-19		8
	02-19		9
	02-20		
	02-20		10
	02-20		11
	02-20		12
	02-20		13
	02-20		14
	02-20		15
	02-20		16
	02-20		2
	02-20		3
	02-20		4
	02-20		5
	02-20		6
	02-20		7
	02-20		8
	02-20		9
	02-21		
	02-21		11
	02-22		
	02-22		11
	02-23		15
	02-24		15
	02-29		29
	02-30		26
	02-30		27
	02-30		30
	02-30		31
	02-30		32
	02-35		5
	02-35		6
	02-35		7
	02-36		37
	02-36		37
	02-37		36
	02-37		36
	02-40		15
	02-40		16
	02-40		17
	02-40		20
	02-40		21
	02-40		22
	02-40		25
	02-40		26
	02-40		27
	02-40		29
	02-40		30
	02-40		4
	02-40		7
	02-42		10
	02-42		3
	02-42		6
	02-42		7
	02-42		8
	02-43		10
	02-43		3

Number	Figure	Sequence	Ref.	Number	Figure	Sequence	Ref.
NSS	02-43		6	NSS	04-20		10
	02-43		7		04-20		14
	02-43		8		04-20		15
	03-05		21		04-20		19
	03-08		5		04-20		44
	03-08		6		04-24		2
	03-08		7		04-28		20
	03-08		8		04-29		15
	03-08		9		04-29		16
	03-09		1		04-29		17
	03-09		10		04-31		15
	03-09		11		04-31		22
	03-09		12		04-31		23
	03-09		13		04-31		25
	03-09		14		04-31		3
	03-09		19		04-31		5
	03-09		2		05-10		11
	03-09		23		05-10		11
	03-09		28		05-10		11
	03-09		29		05-10		11
	03-09		3		05-10		11
	03-09		30		05-10		11
	03-09		31		05-10		21
	03-09		32		05-10		22
	03-09		33		05-10		27
	03-09		35		05-10		28
	03-09		36		05-10		7
	03-09		37		05-10		8
	03-09		38		05-11		11
	03-09		4		05-11		11
	03-09		41		05-11		11
	03-09		5		05-11		11
	03-09		6		05-11		11
	03-09		7		05-11		11
	03-09		8		05-11		21
	03-09		9		05-11		22
	03-10		1		05-11		27
	03-10		13		05-11		28
	03-10		14		05-11		7
	03-10		17		05-11		8
	03-10		18		05-12		11
	03-10		19		05-12		11
	03-10		2		05-12		11
	03-10		23		05-12		11
	03-10		24		05-12		11
	03-10		25		05-12		11
	03-10		26		05-12		21
	03-10		27		05-12		22
	03-10		29		05-12		27
	03-10		3		05-12		28
	03-10		4		05-12		7
	03-11		1		05-12		8
	03-11		10		05-13		11
	03-11		15		05-13		11
	03-11		17		05-13		11
	03-11		18		05-13		11
	03-11		19		05-13		11
	03-11		2		05-13		11
	03-11		20		05-13		21
	03-11		3		05-13		22
	03-11		4		05-13		27
	03-11		5		05-13		28
	03-12		1		05-13		7
	03-12		15		05-13		8
	03-12		16		05-14		11
	03-12		20		05-14		11
	03-12		21		05-14		11
	03-12		22		05-14		11
	03-12		23		05-14		11
	03-12		24		05-14		11
	03-12		25		05-14		21
	03-12		26		05-14		22
	03-12		27		05-14		27
	03-12		28		05-14		28
	03-12		29		05-14		7
	03-12		30		05-14		8
	03-14		4		05-15		11
	03-14		5		05-15		11
	03-14		6		05-15		11
	03-14		7		05-15		11
	03-14		8		05-15		11
	03-14		9		05-15		11
	03-21		15		05-15		21
	03-22		15		05-15		22
	04-10		14		05-15		27

Number	Figure	Sequence	Ref.	Number	Figure	Sequence	Ref.
NSS	05-15		28	NSS	05-20		31
	05-15		7		05-20		31
	05-15		8		05-20		31
	05-16		2		05-20		31
	05-16		3		05-20		9
	05-16		4		05-21		12
	05-17		2		05-21		13
	05-17		3		05-21		14
	05-17		4		05-21		15
	05-18		10		05-21		15
	05-18		11		05-21		15
	05-18		12		05-21		15
	05-18		13		05-21		15
	05-18		14		05-21		15
	05-18		15		05-21		20
	05-18		16		05-21		25
	05-18		2		05-21		29
	05-18		21		05-21		30
	05-18		22		05-21		31
	05-18		28		05-21		32
	05-18		28		05-22		12
	05-18		28		05-22		13
	05-18		31		05-22		14
	05-18		31		05-22		15
	05-18		31		05-22		15
	05-18		31		05-22		15
	05-18		31		05-22		15
	05-18		31		05-22		15
	05-18		31		05-22		15
	05-18		31		05-22		25
	05-18		31		05-22		29
	05-18		31		05-22		30
	05-18		7		05-22		31
	05-18		8		05-22		32
	05-19		10		05-23		10
	05-19		11		05-23		11
	05-19		15		05-23		12
	05-19		16		05-23		13
	05-19		17		05-23		14
	05-19		18		05-23		15
	05-19		19		05-23		5
	05-19		2		05-23		9
	05-19		20		05-24		10
	05-19		21		05-24		11
	05-19		22		05-24		12
	05-19		23		05-24		13
	05-19		24		05-24		14
	05-19		28		05-24		15
	05-19		28		05-24		5
	05-19		28		05-24		9
	05-19		3		06-06		1
	05-19		31		06-06		9
	05-19		31		06-07		3
	05-19		31		06-17		1
	05-19		31		06-17		22
	05-19		31		06-17		23
	05-19		31		06-17		24
	05-19		31		06-17		25
	05-19		31		06-17		26
	05-19		31		06-17		27
	05-19		31		06-17		30
	05-19		9		06-17		6
	05-20		10		06-17		7
	05-20		11		06-17		8
	05-20		15		06-24		10
	05-20		16		06-24		9
	05-20		17		06-26		1
	05-20		18		06-27		1
	05-20		19		06-27		12
	05-20		2		06-27		13
	05-20		20		06-27		14
	05-20		21		06-27		18
	05-20		22		06-28		1
	05-20		23		06-28		10
	05-20		24		06-28		14
	05-20		28		06-28		8
	05-20		28		06-28		9
	05-20		28		06-29		1
	05-20		3		06-29		6
	05-20		31		06-29		7
	05-20		31		06-45		25
	05-20		31		06-45		30
	05-20		31		06-48		
	05-20		31		06-48		17
	05-20		31		07-05		1

Number	Figure	Sequence	Ref.
NSS	07-09		1
	07-09		22
	07-09		6
	08-03		42
	08-08		53
	08-16		10
	08-16		11
	08-16		13
	08-16		14
	08-16		18
	08-16		20
	08-16		31
	08-16		8
	08-17		1
	08-17		10
	08-17		22
	08-17		23
	08-17		24
	08-17		25
	08-17		26
	08-17		27
	08-17		28
	08-17		5
	08-17		8
	08-17		9
	08-19		1
	08-19		3
	08-19		4
	08-19		6
	08-19		7
	08-20		1
	08-20		17
	08-20		18
	08-20		21
	08-20		22
	08-20		23
	08-20		24
	08-20		25
	08-20		30
	08-20		31
	08-20		32
	08-20		39
	08-20		48
	08-21		16
	08-21		17
	08-21		18
	08-21		21
	08-21		22
	08-21		23
	08-21		24
	08-21		34
	08-21		35
	08-21		36
	08-21		40
	08-21		41
	08-23		1
	08-23		14
	08-27		1
	08-27		7
	08-27		9
	09-05		4
	09-13		13
	09-14		13
	09-20		27
	09-20		28
	09-20		29
	09-20		30
	09-35		15
	09-35		16
	09-35		19
	09-35		21
	09-35		22
	09-35		23
	09-35		24
	09-35		25
	09-35		39
	09-35		41
	09-35		42
	09-43		4
	09-51		1
	09-51		1
	09-54		1
	09-55		12
	09-55		18
	09-55		19

Number	Figure	Sequence	Ref.
NSS	09-55		20
	09-55		21
	09-55		22
	09-55		24
	09-55		25
	09-55		26
	09-55		27
	09-56		39
	09-58		1
	09-58		15
	09-58		16
	09-58		17
	09-58		18
	09-58		19
	09-58		20
	09-58		25
	09-58		26
	09-58		27
	09-58		28
	09-58		29
	09-58		31
	09-58		35
	09-58		36
	09-58		37
	09-58		38
	09-58		39
	09-58		40
	09-58		42
	09-58		43
	09-58		44
	09-58		46
	09-58		47
	09-58		48
	09-58		51
	09-58		52
	09-58		53
	09-58		57
	09-58		60
	09-59		1
	09-59		15
	09-59		16
	09-59		17
	09-59		18
	09-59		19
	09-59		20
	09-59		25
	09-59		26
	09-59		27
	09-59		28
	09-59		29
	09-59		31
	09-59		35
	09-59		36
	09-59		37
	09-59		38
	09-59		39
	09-59		40
	09-59		42
	09-59		43
	09-59		44
	09-59		46
	09-59		47
	09-59		48
	09-59		51
	09-59		52
	09-59		53
	09-59		57
	09-59		60
	09-60		17
P741441	05-01		30
	09-21		4
R21491	06-39		11
	06-41		4
R55002	09-10		30
REF	02-01		1
	02-03		1
	02-17		1
	02-18		1
	02-21		
	02-22		
	02-26		1
	02-27		1
	02-28		1
	03-03		17
	03-03		18

Number	Figure	Sequence	Ref.	Number	Figure	Sequence	Ref.
REF	03-21		13				
	03-21		17				
	03-21		8				
	03-22		13				
	03-22		17				
	03-22		8				
	03-23		13				
	03-23		7				
	03-24		13				
	03-24		17				
	03-24		8				
	04-01		11				
	04-01		12				
	04-01		13				
	04-01		14				
	04-01		25				
	04-01		5				
	04-02		10				
	04-02		11				
	04-02		14				
	04-02		5				
	04-02		7				
	04-02		8				
	04-02		9				
	04-14		1				
	04-21		1				
	04-29		1				
	08-01		1				
	08-09		1				
	08-13		1				
	08-13		4				
	08-14		23				
	08-15		22				
ST2051	06-10		12				
	06-11		55				
ST2063	06-18		39				
ST269A	06-38		34				
ST791	06-10		7				
ST863	06-10		13				
	06-11		56				
ST951	06-10		8				
ST964	06-12		45				
ST970	06-08		53				
T101398	09-12		43				
T101913	07-19		8				
T102217	07-01		29				
T103887	07-15		24				
T103977	07-17		18				
ZKA1000012	04-22		1				